SERVICE BULLETIN

MITSUBISHI MOTORS

GLOBAL AFTER SALES OFFICE, MITSUBISHI MOTORS CORPORATION

PURPOSE : INFORMATION	ISSUE NO. : MSB-13EX00-001	DATE : 2013-11-20
SUBJECT : INFORMATION ON 2014 OUTLANDER BODY REPAIR MANUAL		<DESTINATION/MODEL> (EUR/RUSSIA/ARGENTINA/ SOUTH AFRICA) OUTLANDER(GF0W) <M/Y> 14
GROUP : GENERAL(Gr:00)		

1. Description :

This Service Bulletin contains the information about the 2014 OUTLANDER Body Repair Manual.

2. Affected service manuals :

Applicable manual	Pub. No.	Content
2014 OUTLANDER/ OUTLANDER PHEV Workshop Manual	CGFE14E2-CD (English) CGFF14E2-CD (French) CGFG14E2-CD (German) CGFS14E2-CD (Spanish) CGFI14E2-CD (Italian) ARGENTINA/SOUTH AFRICA:DRAFT	Attached sheet

3. About the details :

Please refer to the attached document
Main items for change in 14MY are as shown below :
①Group 5 : SYNTHETIC-RESIN PARTS
②Group 6 : Body Colour

4. Effective time : From the vehicle of 14MY

GROUP 5

SYNTHETIC-RESIN PARTS

CONTENTS

GENERAL 5-2
LOCATION OF SYNTHETIC-RESIN PARTS <OPTIONAL>. 5-2

GENERAL

M4050000100144

OUTLINE OF CHANGE

The section "LOCATION OF SYNTHETIC-RESIN PARTS" below has been established.

LOCATION OF SYNTHETIC-RESIN PARTS <OPTIONAL>

M4050001002191

Indicates the main usage locations that have been added.

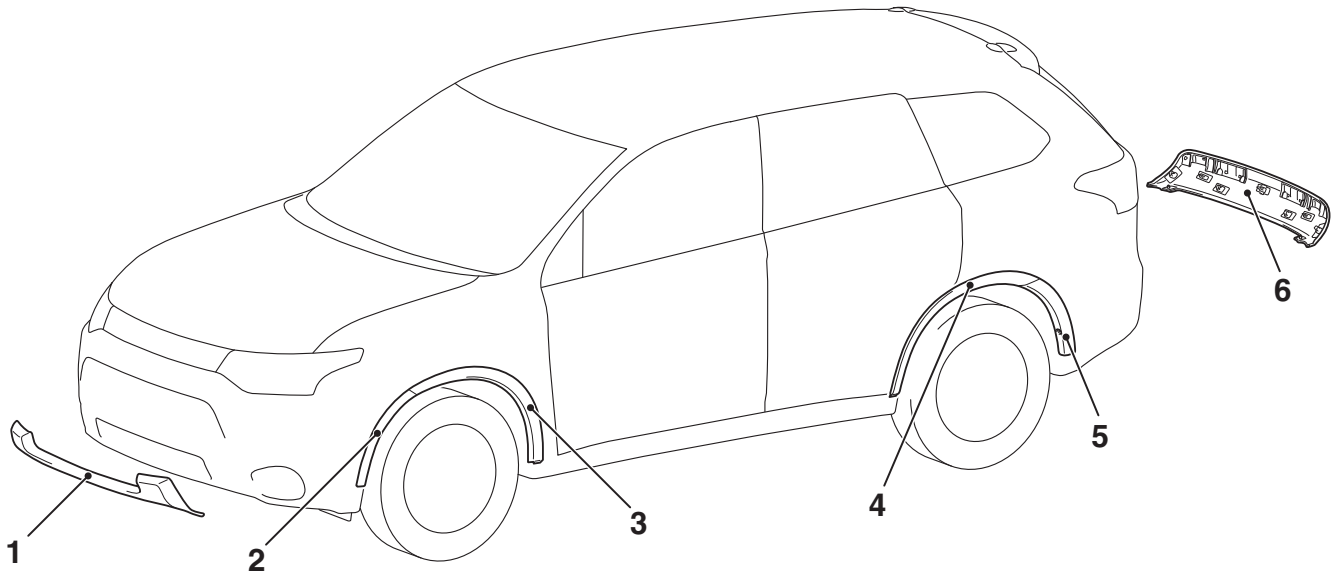

ABD00298AB

No.	Part Name	Name Of Resin	Abbreviation	Heat-resistant Temp [°C]
1	Front bumper extension	Rubber modified polypropylene	PP+E/P	80
2	Front bumper moulding			
3	Front wheel arch moulding			
4	Rear wheel arch moulding			
5	Rear bumper moulding			
6	Rear bumper extension			

NOTE:

- *A slash (/) in the material symbol indicates that two different materials make two-layer construction. A plus sign (+) indicates that the two different materials mix each other.*
- *The material symbols for synthetic-resin parts are embossed on the parts in hidden places.*

GROUP 6

BODY COLOUR

CONTENTS

GENERAL INFORMATION 6-2

BODY COLOUR CHARTS. 6-2

BODY COLOURING 6-3

FRONT BUMPER <OPTIONAL> 6-3

GENERAL INFORMATION

M4060000201231

OUTLINE OF CHANGE

- The section "BODY COLOR CHARTS" below has been established.
- The sections body colouring of "FRONT BUMPER" below has been established. <OPTIONAL>

BODY COLOUR CHARTS

M4060002004351

Check the vehicle's body colour code, and then use this body colour chart to determine the refinishing paint supplier from which the colour can be purchased.

VEHICLES FOR EUROPE AND RUSSIA

Colour	Colour code	Colour number	Colour name	Coating film structure	Composition of film
SILVER	A31	CMA10031	Cool Silver Metallic	2M	Metallic
REDDISH BROWN	C07	CMC10007	Copper Metallic	2M	Metallic
DARK BLUE	D14	CMD10014	Cosmic Blue Mica	2P	Interferenced Pearl
RED	P26	CMP10026	Red Metallic	2M	Metallic
GREY	U17	CMU10017	Titanium Grey Metallic	2M	Metallic
BLUISH SILVER	U21	CMU10021	Technical Silver Metallic	2M	Metallic
WHITE	W13	CMW10013	White Pearl	3P	Pearl
WHITE	W37	CMW10037	White Solid	2S	Solid
BLACK	X42	AC11342	Black Mica	2P	Interferenced Pearl

NOTE:

- *The coating film structure indicates top coating only (2S: 2 coat solid, 2M: 2 coat metallic, 2P: 2 coat pearl, 3P: 3 coat pearl).*
- *For painting, inner panel colours should be similar to the outer panel colours.*
- *The roof rail is coated in Black (AC10657) or Silver (CMA10031).*
- *The front bumper extension and rear bumper extension are coated in Silver (AC11169).*

BODY COLOURING

FRONT BUMPER <OPTIONAL>

M4060000500433

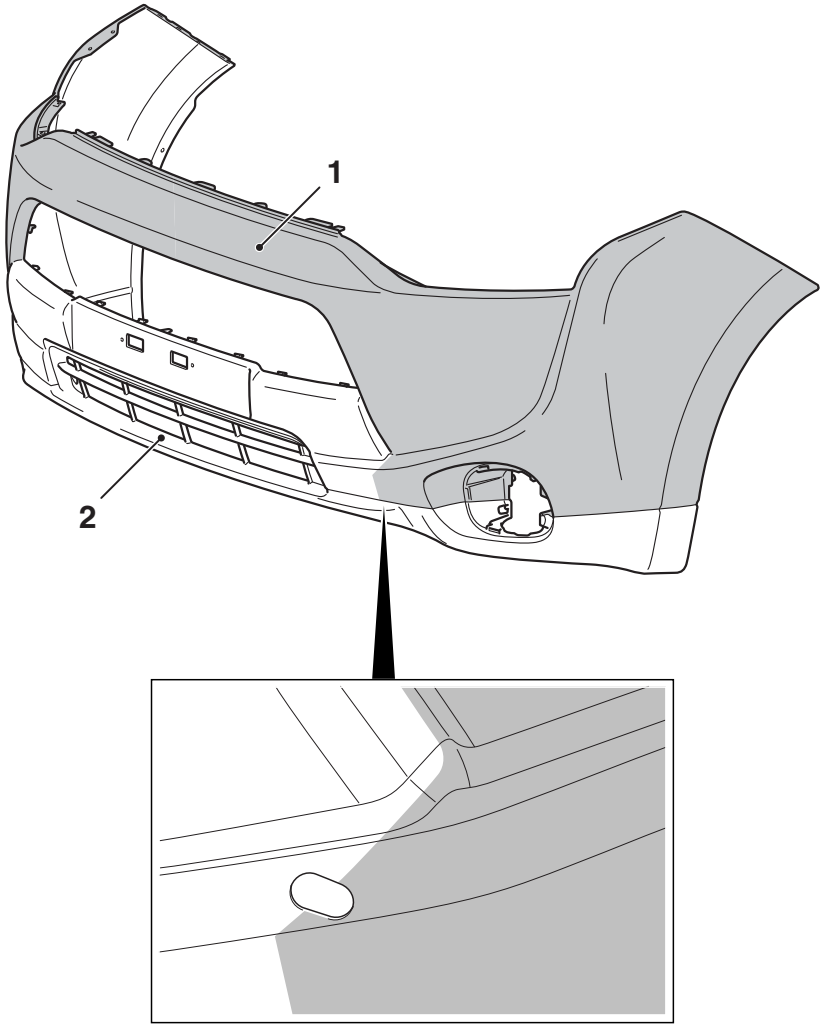

1	Body Colour
2	Material colour

ABD00383AB