SERVICE BULLETIN

MITSUBISHI MOTORS

GLOBAL AFTER SALES OFFICE, MITSUBISHI MOTORS CORPORATION

PURPOSE : CORRECTION	ISSUE NO. : MSB-13EX00-501	DATE : 2013-12-04
SUBJECT : MAINTENANCE POINTS OF 4A9 ENGINE		<DESTINATION/MODEL> (EUR/G.EXP/GCC/SOUTH AFRICA/RUSIA) <M/Y> 11-14
GROUP : GENERAL(Gr:00)		LANCER/LANCER EX/LANCER SPORTBACK/ASX

1. Description :

Please refer to the attached document for the correction of the error in writing existing in the applicable service manual. (There are some errors in writing about the maintenance point about the 4A9 engine)

① Deletion of the tension pulley
② Removal and installation of the starter motor(Addition of the applicable models)
③ Addition of the mounting instruction for the flywheel and drive plate
④ Addition of the vacuum hose chamber for the solenoid valve

2. Affected service manuals :

Please refer to the attached document (Please see the attached 1)

3. About the details :

Please refer to the attached document (Please see the attached 2-14)

Attached sheet 1(1/2)

EU/RUSSIA - ASX

Applicable manual	Pub. No.	Applicable title(Info-ID)	Contents
2011 ASX Workshop Manual	CGWE11E2-CD (ENG) CGWF11E2-CD (FRE) CGWG11E2-CD (GER) CGWS11E2-CD (SPA) CGWI11E2-CD (ITA) RUSSIA:N/A	G11F TORQUE SPECIFICATION (M113-02-344-80600-01)	Attached sheet2
		G11F ALTERNATOR AND IGNITION SYSTEM REMOVAL AND INSTALLATION (M113-00-102-54700-01)	Attached sheet3
		G11F FUEL AND EMISSION PARTS REMOVAL AND INSTALLATION (M113-00-221-55200-01)	Attached sheet4
		G16 STARTER ASSEMBLY REMOVAL AND INSTALLATION (M162-00-103-21800-01)	Attached sheet5
2012 ASX Workshop Manual	CGWE12E1-CD (ENG) CGWF12E1-CD (FRE) CGWG12E1-CD (GER) CGWS12E1-CD (SPA) CGWI12E1-CD (ITA) RUSSIA:N/A	TORQUE SPECIFICATION (M113-02-344-80600-01)	Attached sheet2
		ALTERNATOR AND IGNITION SYSTEM REMOVAL AND INSTALLATION (M113-00-102-54700-01)	Attached sheet3
		G11F FUEL AND EMISSION PARTS REMOVAL AND INSTALLATION (M113-00-221-55200-01)	Attached sheet4
		G16 STARTER ASSEMBLY REMOVAL AND INSTALLATION (M162-00-103-21800-01)	Attached sheet5
2013 ASX Workshop Manual	CCAE13E1-CD (ENG) CCAF13E1-CD (FRE) CCAG13E1-CD (GER) CCAS13E1-CD (SPA) CCAI13E1-CD (ITA) RUSSIA:N/A	G11F TORQUE SPECIFICATION (M113-02-345-58600-01)	Attached sheet6
		G11F ALTERNATOR AND IGNITION SYSTEM REMOVAL AND INSTALLATION (M113-00-102-90100-01)	Attached sheet3
		G11F FUEL AND EMISSION PARTS REMOVAL AND INSTALLATION (M113-00-221-55201-01)	Attached sheet4
		G16 STARTER ASSEMBLY REMOVAL AND INSTALLATION (M162-00-103-21800-01)	Attached sheet5
2014 ASX Workshop Manual	CGAE14E1-CD (ENG) CGAF14E1-CD (FRE) CGAG14E1-CD (GER) CGAS14E1-CD (SPA) CGAI14E1-CD (ITA) RUSSIA:N/A	G11F TORQUE SPECIFICATION (M113-02-345-58600-01)	Attached sheet6
		G11F ALTERNATOR AND IGNITION SYSTEM REMOVAL AND INSTALLATION (M113-00-102-90100-01)	Attached sheet3
		G11F FUEL AND EMISSION PARTS REMOVAL AND INSTALLATION (M113-00-221-55201-01)	Attached sheet4
		G16 STARTER ASSEMBLY REMOVAL AND INSTALLATION (M162-00-103-21800-01)	Attached sheet5

Attached sheet 1(2/2)

EU/RUSSIA - LANCER/LANCER SPORTBACK

Applicable manual	Pub. No.	Applicable title(Info-ID)	Contents
2011 LANCER/LANCER SPORTBACK (CY0A/CX0A) Workshop Manual CD-ROM	CGSE11E1-CD (ENG) CGSF11E1-CD (FRE) CGSG11E1-CD (GER) CGSS11E1-CD (SPA) CGSI11E1-CD (ITA) RUSSIA:N/A	G11B TORQUE SPECIFICATION (M113-02-344-86200-01)	Attached sheet2
		G11B ALTERNATOR AND IGNITION SYSTEM REMOVAL AND INSTALLATION (M113-00-102-55800-01)	Attached sheet3
		G11B FUEL AND EMISSION PARTS REMOVAL AND INSTALLATION (M113-00-221-55200-01)	Attached sheet4
		G16 STARTER ASSEMBLY REMOVAL AND INSTALLATION (M162-00-102-50500-01)	Attached sheet7
2012 LANCER/LANCER SPORTBACK (CY0A/CX0A) Workshop Manual CD-ROM	CGSE12E1-CD (ENG) CGSF12E1-CD (FRE) CGSG12E1-CD (GER) CGSS12E1-CD (SPA) CGSI12E1-CD (ITA) RUSSIA:N/A	G11B TORQUE SPECIFICATION (M113-02-344-80600-01)	Attached sheet2
		G11B ALTERNATOR AND IGNITION SYSTEM REMOVAL AND INSTALLATION (M113-00-102-54700-01)	Attached sheet3
		G11B FUEL AND EMISSION PARTS REMOVAL AND INSTALLATION (M113-00-221-55200-01)	Attached sheet4
		G11B CRANKSHAFT AND CYLINDER BLOCK REMOVAL AND INSTALLATION (M113-00-874-23100-01)	Attached sheet13
		G16 STARTER ASSEMBLY REMOVAL AND INSTALLATION (M162-00-102-50500-01)	Attached sheet8
2013 LANCER/LANCER SPORTBACK (CY0A/CX0A) Workshop Manual CD-ROM	CGSE13E1-CD (ENG) CGSF13E1-CD (FRE) CGSG13E1-CD (GER) CGSS13E1-CD (SPA) CGSI13E1-CD (ITA) RUSSIA:N/A	G11B TORQUE SPECIFICATION (M113-02-345-60500-01)	Attached sheet6
		G11B ALTERNATOR AND IGNITION SYSTEM REMOVAL AND INSTALLATION (M113-00-102-90100-01)	Attached sheet9
		G11B FUEL AND EMISSION PARTS REMOVAL AND INSTALLATION (M113-00-221-55201-01)	Attached sheet4
		G11B CRANKSHAFT AND CYLINDER BLOCK REMOVAL AND INSTALLATION (M113-00-874-32700-01)	Attached sheet14
		G16 STARTER ASSEMBLY REMOVAL AND INSTALLATION (M162-00-102-50500-01)	Attached sheet8

G.EXP/SOUTH AFRICA/GCC - LANCER/LANCER EX

Applicable manual	Pub. No.	Applicable title(Info-ID)	Contents
2011 LANCER/LANCER EX (CY0A) Workshop Manual	PWME1010R (ENG) PWMS1011R (SPA) SOUTH AFRICA:DRAFT	G11B TORQUE SPECIFICATION (M113-02-344-88400-01)	Attached sheet2
		G11B ALTERNATOR AND IGNITION SYSTEM REMOVAL AND INSTALLATION (M113-00-102-56900-01)	Attached sheet10
		G11B FUEL AND EMISSION PARTS REMOVAL AND INSTALLATION (M113-00-221-58500-01)	Attached sheet11
2012 LANCER/LANCER EX (CY0A) Workshop Manual	PWME1111R (ENG) PWMS1112R (SPA) SOUTH AFRICA:DRAFT	G16 STARTER ASSEMBLY REMOVAL AND INSTALLATION [after] (M162-00-011-27200-01)	Attached sheet12

Attached sheet2

TORQUE SPECIFICATIONS

Items	N·m
ALTERNATOR AND IGNITION SYSTEM	
Spark plugs	25 ± 5
Ignition coil bolts	9.5 ± 2.5
Tensioner pulley bolt <Deleted>	~~49 ± 9~~
Crankshaft pulley bolt	50 → +60°
Water pump pulley bolts	11 ± 3
Adjust bolt	5.0 ± 1.0
Alternator brace bolt	37 ± 6
Alternator nut (M8)	23 ± 2
Alternator nut (M10)	47 ± 5
Oil level gauge guide bolt	11 ± 3
FUEL AND EMISSION PARTS	
Delivery pipe and injector assembly bolts	14 ± 3
Manifold absolute pressure (MAP) sensor bolt	5.5 ± 1.5
Throttle body bolts	9.5 ± 2.5
Solenoid valve nut	7.6 ± 0.6
Engine hanger bolts	26 ± 6
INLET MANIFOLD	
Water pipe bolts	11 ± 3
Water inlet fitting bolts	11 ± 3
Engine coolant temperature sensor	30 ± 9
Crank angle sensor bolt	9.5 ± 2.5
Camshaft position sensor bolt	9.5 ± 2.5
Detonation sensor bolt	20 ± 2
Oil pressure switch	10 ± 2
Inlet manifold bolts	19 ± 1
Inlet manifold stay bolts	19 ± 1
EXHAUST MANIFOLD	
Exhaust manifold bracket A bolts	23 ± 6
Exhaust manifold bracket B bolts	36 ± 9
Exhaust manifold nuts	34 ± 3
Heat protector bolts	9.5 ± 2.5
OIL PAN AND TIMING CHAIN CASE	
Cover bolts	9.5 ± 2.5
Timing chain case bolts (M10)	42 ± 16
Timing chain case bolts (M6)	9.5 ± 2.5
Water pump bolts	11 ± 3
Oil screen bolts	8.0 ± 2.0
Oil pan bolts	11 ± 3

Attached sheet3

REMOVAL AND INSTALLATION

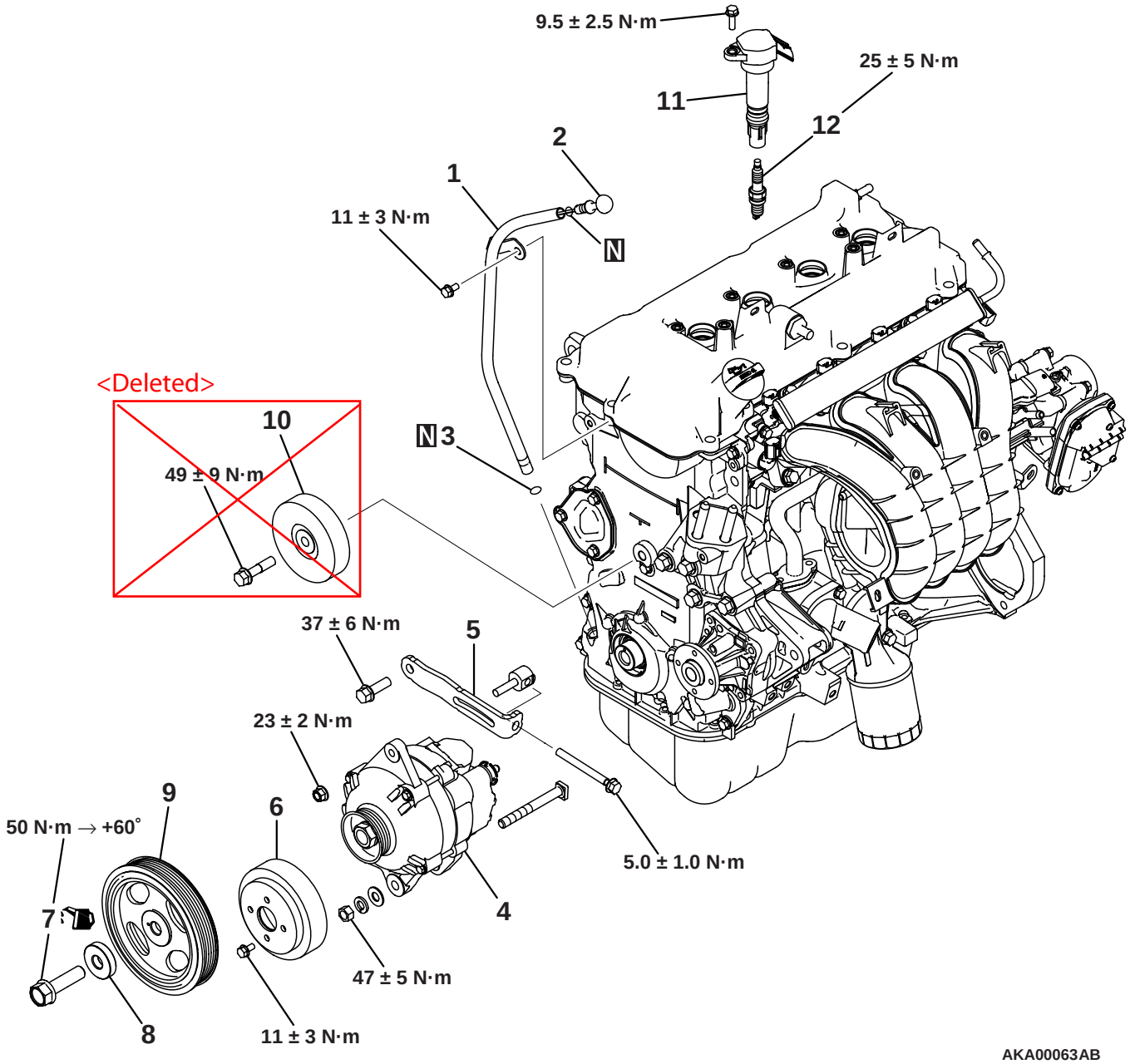

Removal steps

1. Oil level gauge guide
2. Oil level gauge
3. O-ring
4. Alternator
5. Alternator brace
6. Water pump pulley

Removal steps

<<A>> >>A<< 7. Crankshaft pulley centre bolt
>>A<< 8. Crankshaft pulley washer
>>A<< 9. Crankshaft pulley
<Deleted> ~~10. Tensioner pulley~~
11. Ignition coil
12. Spark plug

Attached sheet4(1/2)

Insert the Attached sheet4(2/2)

REMOVAL AND INSTALLATION

<Incorrect>

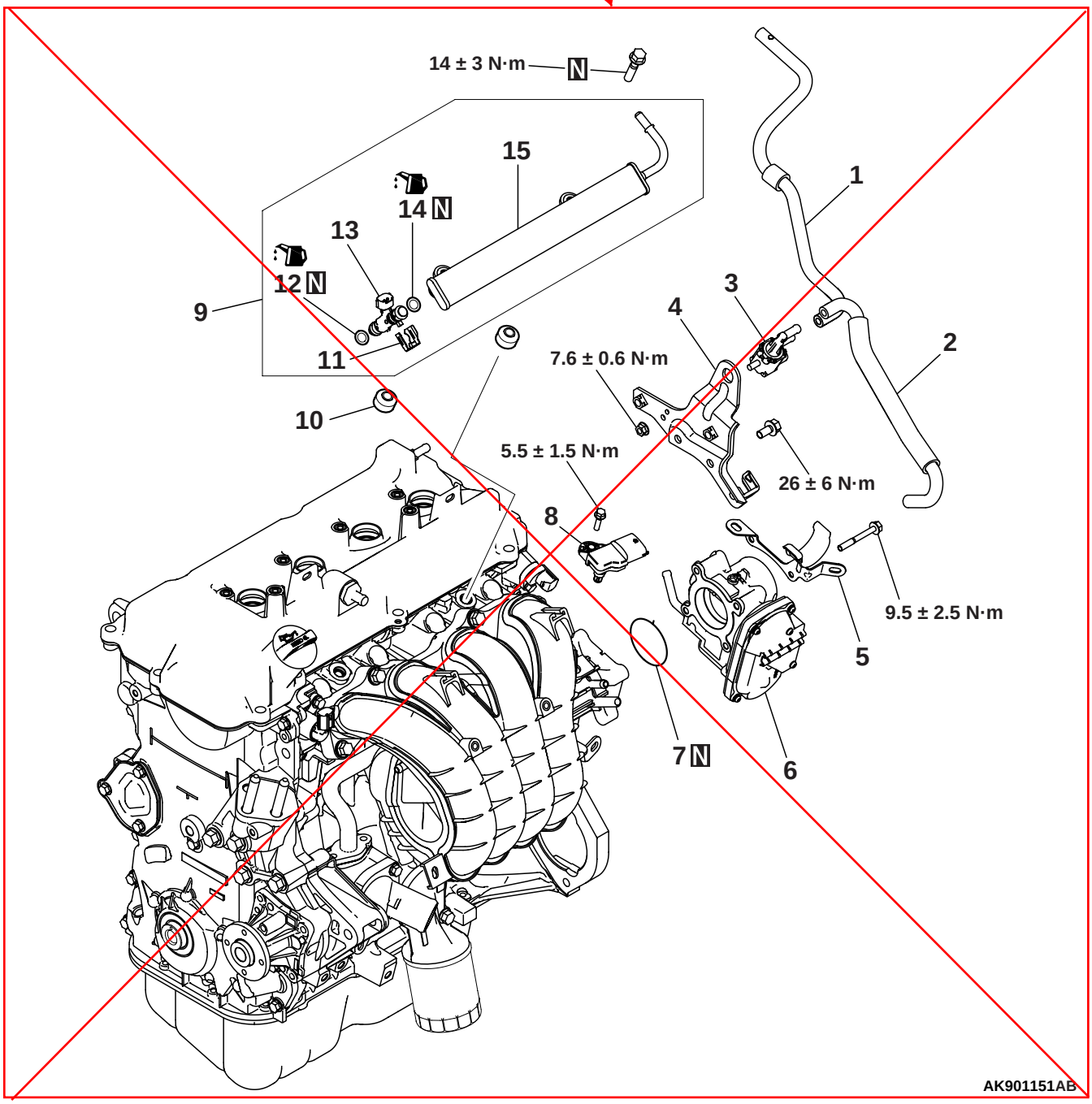

Removal steps

1. Vacuum hose
2. Vacuum hose
3. Solenoid valve
4. Engine hanger
5. Radiator upper hose clamp
6. Throttle body

>>C<< 7. Throttle body gasket

>>B<< 8. Manifold absolute pressure (MAP) sensor

Removal steps

>>A<< 9. Delivery pipe assembly
10. Insulator
11. Injection support
12. O-ring
13. Fuel injector
14. O-ring
15. Delivery pipe

<Correct>

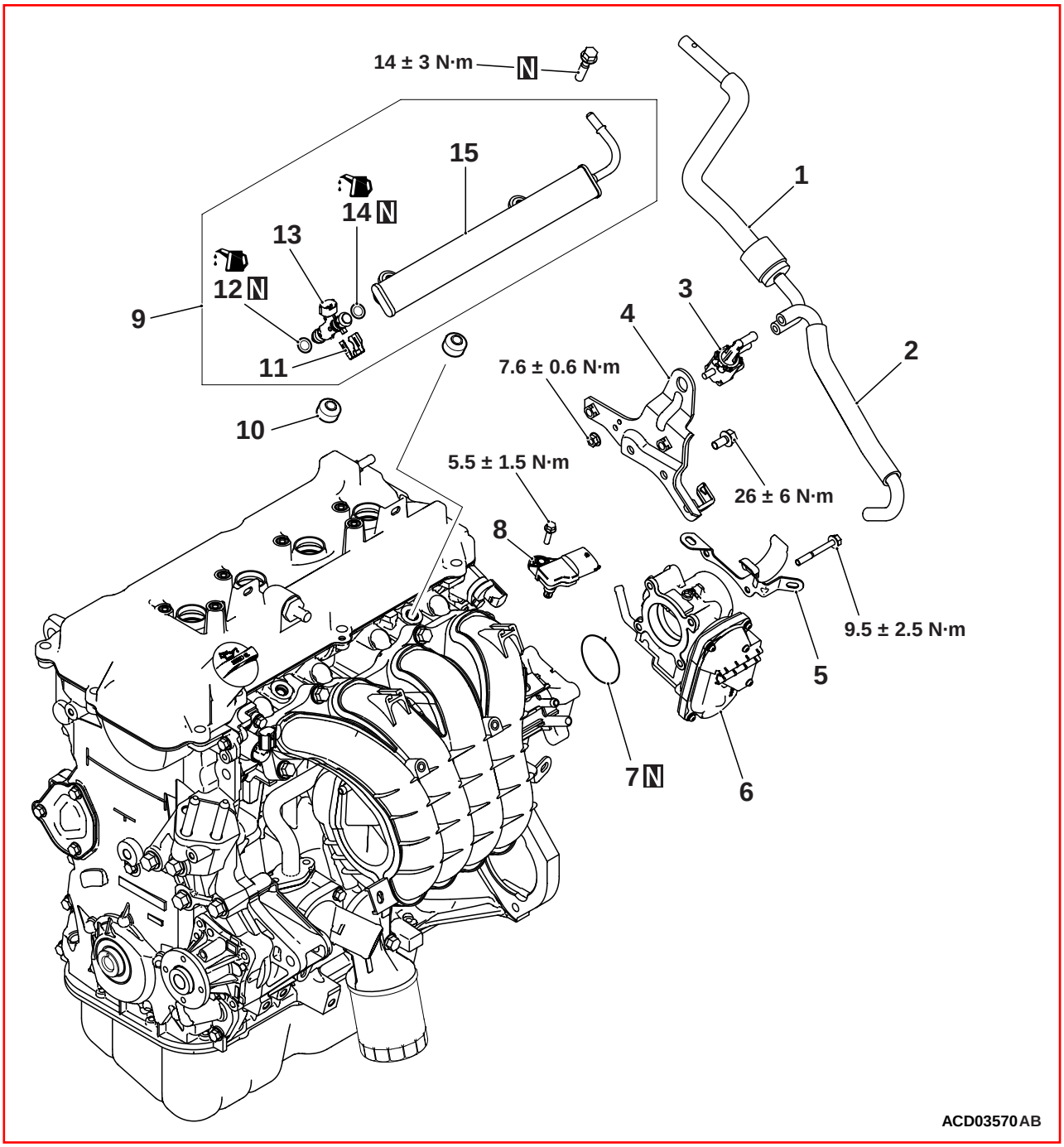
14 ± 3 N·m
N
15
1
14 N
13
12 N
3
4
9
2
7.6 ± 0.6 N·m
11
10
5.5 ± 1.5 N·m
26 ± 6 N·m
8
9.5 ± 2.5 N·m
5
7 N
6
ACD03570AB

Attached sheet5

REMOVAL AND INSTALLATION <4A9>

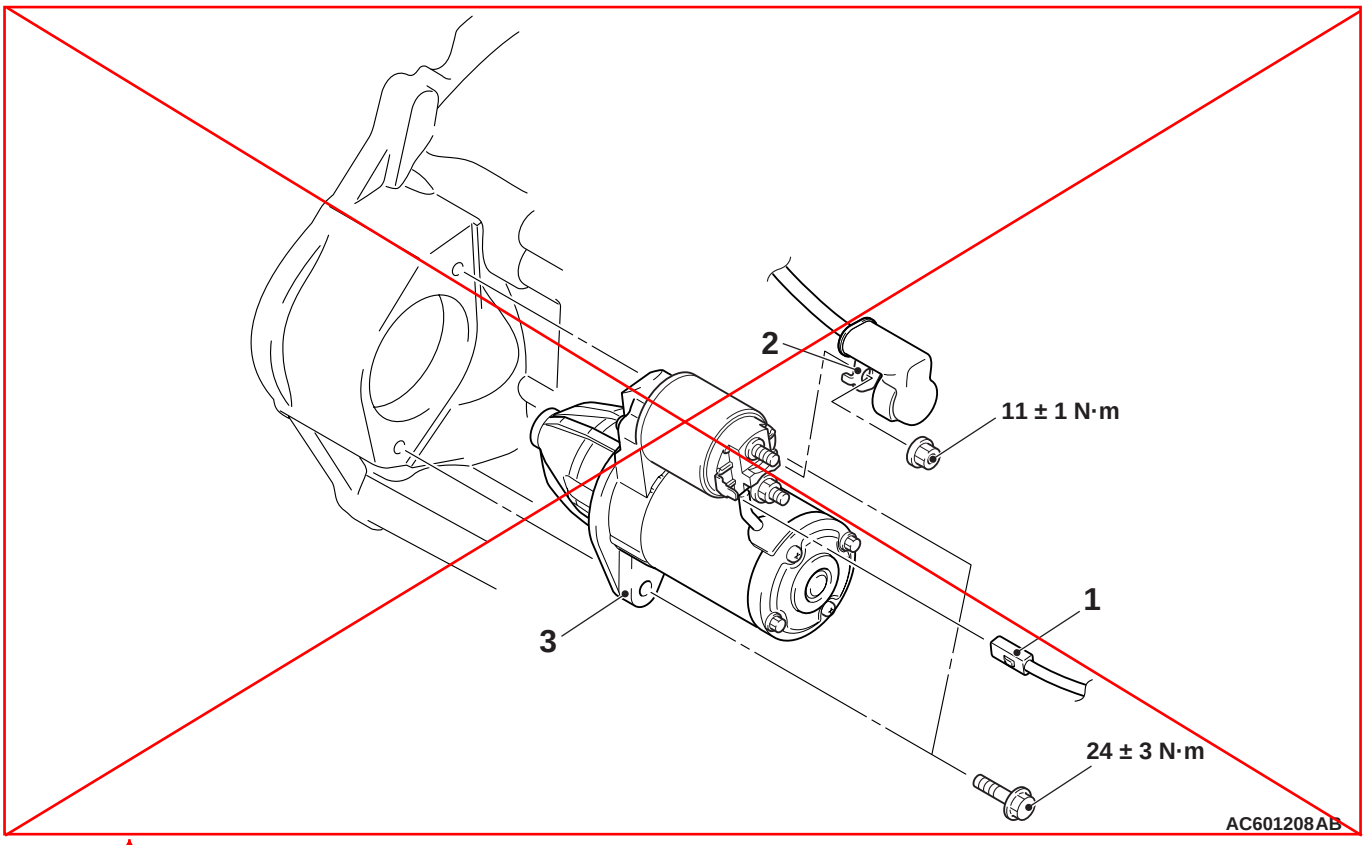

<Incorrect>

Removal steps
- Air cleaner intake duct (Refer to GROUP 15 – Air Cleaner)

1. Starter connector connection

<<A>>

Removal steps

2. Starter terminal connection
3. Starter assembly

REMOVAL SERVICE POINT

<<A>> STARTER ASSEMBLY REMOVAL

Remove the starter assembly from above the vehicle.

<Correct>

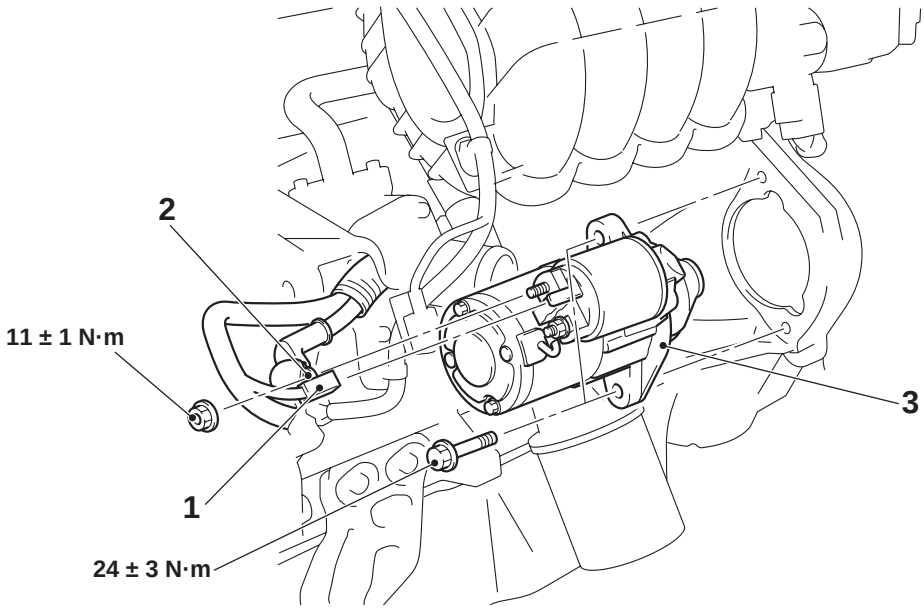

Attached sheet6

TORQUE SPECIFICATIONS

Item	N·m
ALTERNATOR AND IGNITION SYSTEM	
Spark plugs	25 ± 5
Ignition coil bolts	9.5 ± 2.5 <Deleted>
~~Tensioner pulley bolt~~	~~49 ± 9~~
Crankshaft pulley bolt	50 then +60°
Water pump pulley bolts	11 ± 3
Adjust bolt	5.0 ± 1.0
Alternator brace bolt	37 ± 6
Alternator nut (M8)	23 ± 2
Alternator nut (M10)	47 ± 5
Oil level gauge guide bolt	11 ± 3
FUEL AND EMISSION PARTS	
Delivery pipe and injector assembly bolts	14 ± 3
Manifold absolute pressure (MAP) sensor bolt	5.5 ± 1.5
Throttle body bolts	9.5 ± 2.5
Solenoid valve nut	7.6 ± 0.6
Engine hanger bolts	26 ± 6
INLET MANIFOLD	
Water pipe bolts	11 ± 3
Water inlet fitting bolts	11 ± 3
Engine coolant temperature sensor	30 ± 9
Crank angle sensor bolt	9.5 ± 2.5
Camshaft position sensor bolt	9.5 ± 2.5
Detonation sensor bolt	20 ± 2
Oil pressure switch	10 ± 2
Inlet manifold bolts	19 ± 1
Inlet manifold stay bolts	19 ± 1
EXHAUST MANIFOLD	
Exhaust manifold bracket A bolts	23 ± 6
Exhaust manifold bracket B bolts	36 ± 9
Exhaust manifold nuts	34 ± 3
Heat protector bolts	9.5 ± 2.5
OIL PAN AND TIMING CHAIN CASE	
Cover bolts	9.5 ± 2.5
Timing chain case bolts (M10)	42 ± 16
Timing chain case bolts (M6)	9.5 ± 2.5
Water pump bolts	11 ± 3
Oil screen bolts	8.0 ± 2.0
Oil pan bolts	11 ± 3

Attached sheet7

REMOVAL AND INSTALLATION <4A9>

<M/T> <Incorrect>

<4A91-M/T>
<Correct>

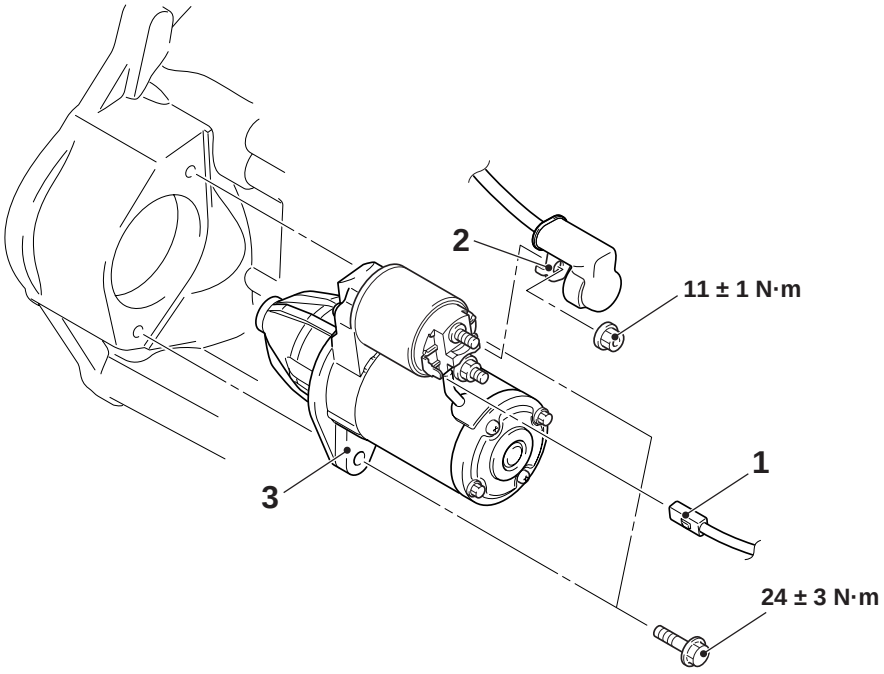

AC601208

<A/T> <Incorrect>

<4A91-A/T, 4A92>
<Correct>

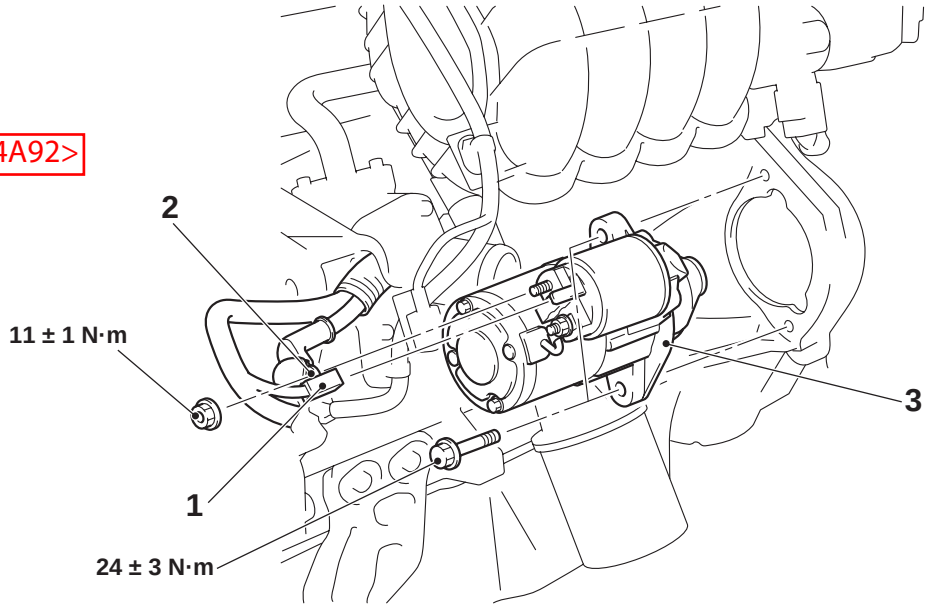

AC613543
AC700152AB

Removal steps

- Air cleaner intake duct (Refer to GROUP 15 – Air Cleaner) <M/T> <<A>>

1. Starter connector connection

Removal steps

2. Starter terminal connection
3. Starter assembly

REMOVAL SERVICE POINT

<<A>> STARTER ASSEMBLY REMOVAL

Remove the starter assembly from above the vehicle.

Attached sheet8

REMOVAL AND INSTALLATION <4A9>

<Deleted>

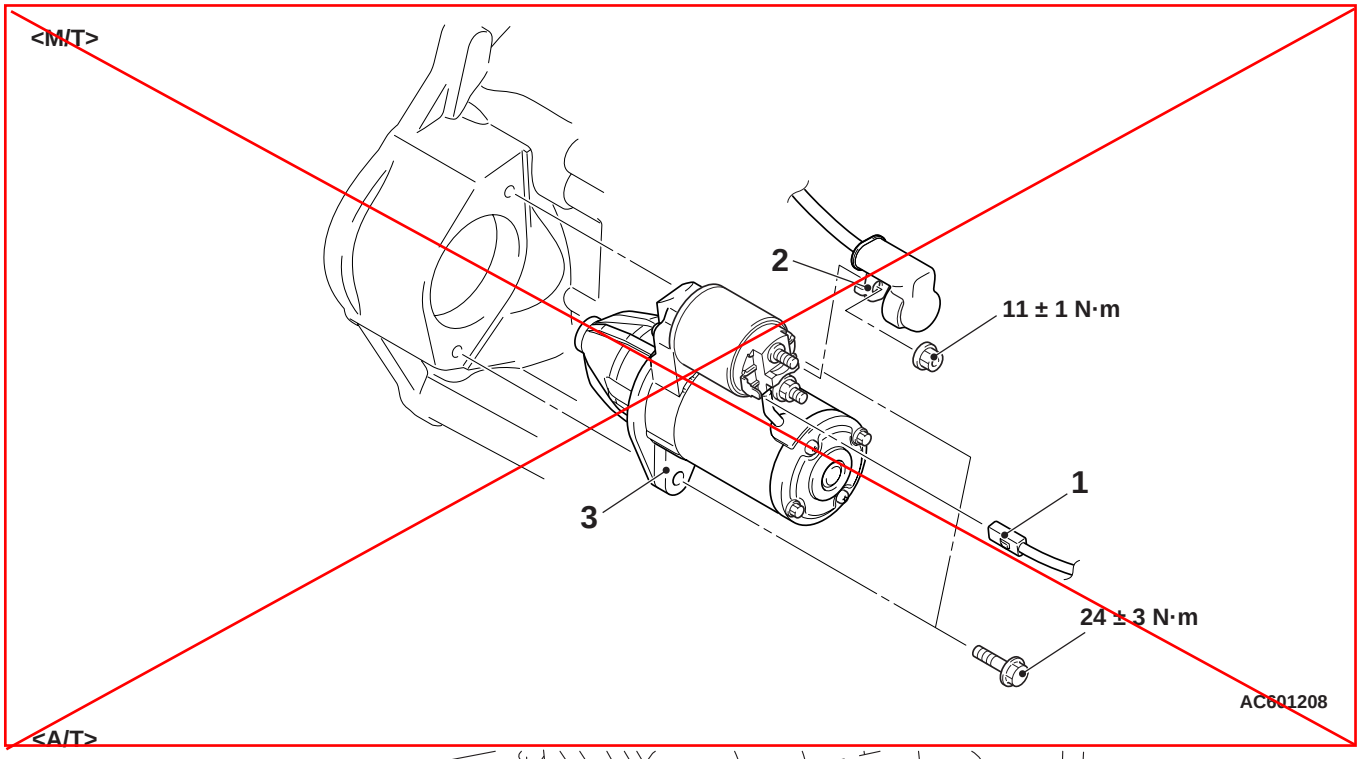

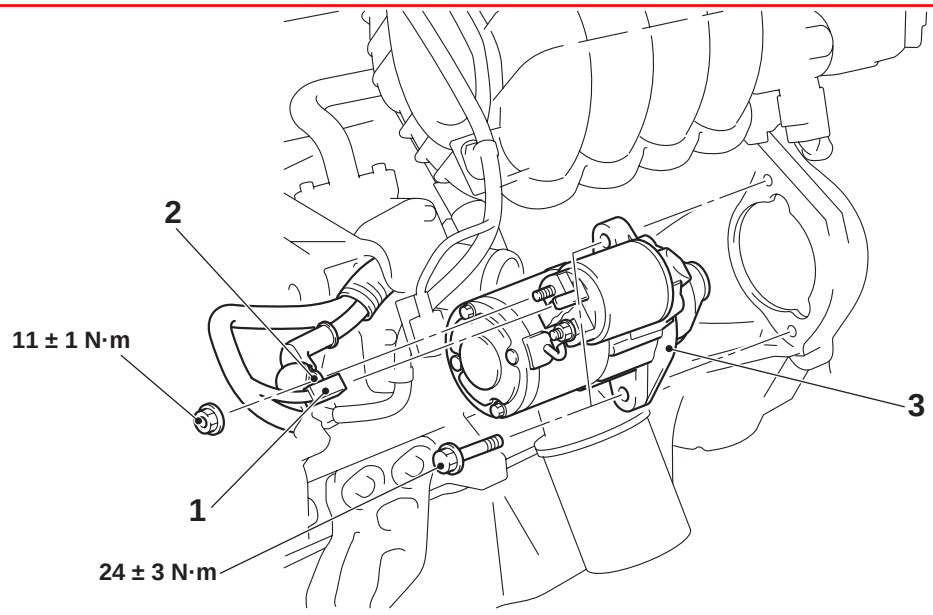

<Deleted> **Removal steps**

- ~~Air cleaner intake duct (Refer to GROUP 15 – Air Cleaner) <M/T>~~ <<A>>

1. Starter connector connection

Removal steps

2. Starter terminal connection
3. Starter assembly

REMOVAL SERVICE POINT

<<A>> STARTER ASSEMBLY REMOVAL

Remove the starter assembly from above the vehicle.

Attached sheet9

REMOVAL AND INSTALLATION

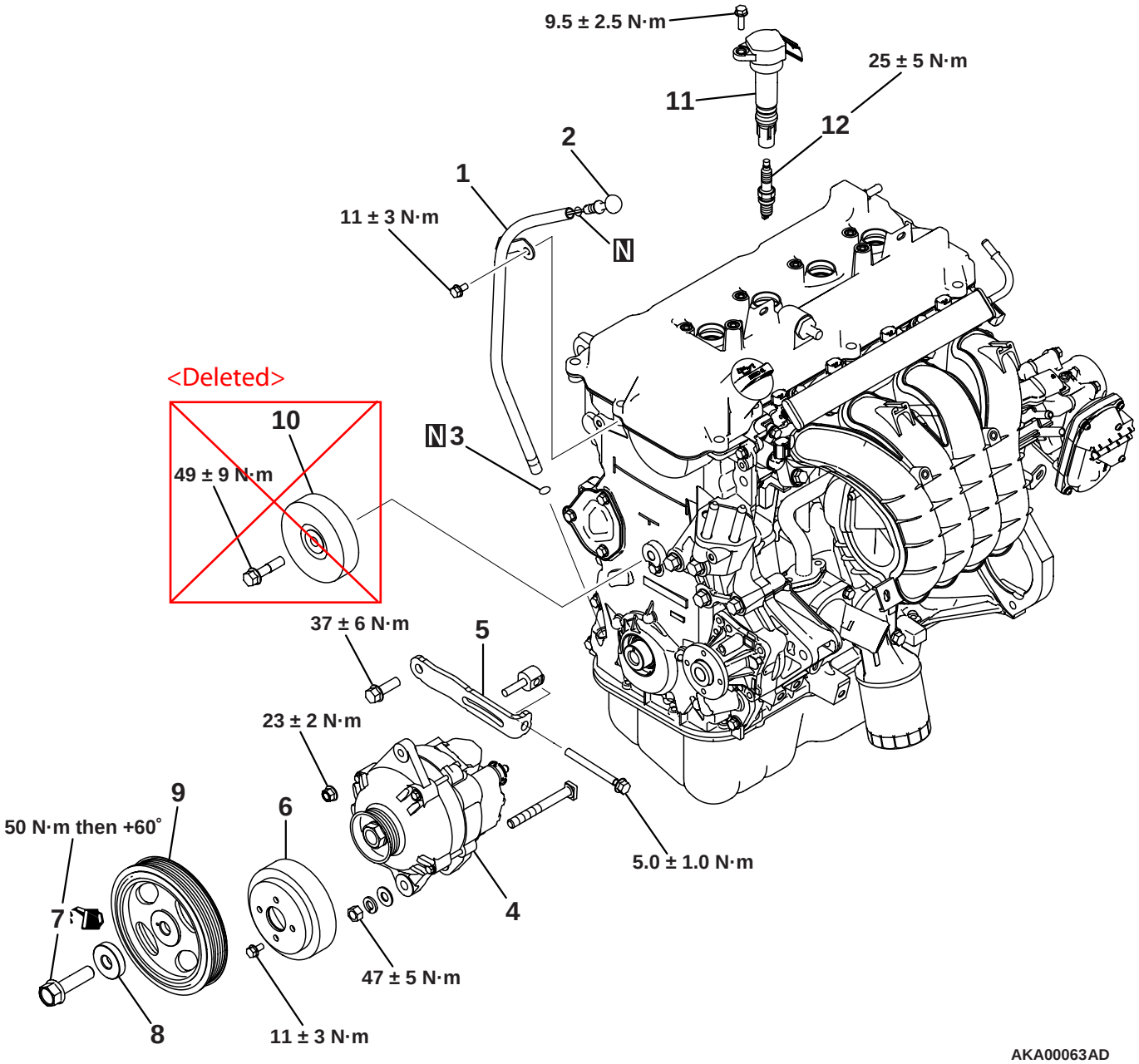

Removal steps

1. Oil level gauge guide
2. Oil level gauge
3. O-ring
4. Alternator
5. Alternator brace
6. Water pump pulley

Removal steps

<<A>> >>A<< 7. Crankshaft pulley centre bolt
>>A<< 8. Crankshaft pulley washer
>>A<< 9. Crankshaft pulley
<Deleted> ~~10. Tensioner pulley~~
11. Ignition coil
12. Spark plug

Attached sheet10

REMOVAL AND INSTALLATION

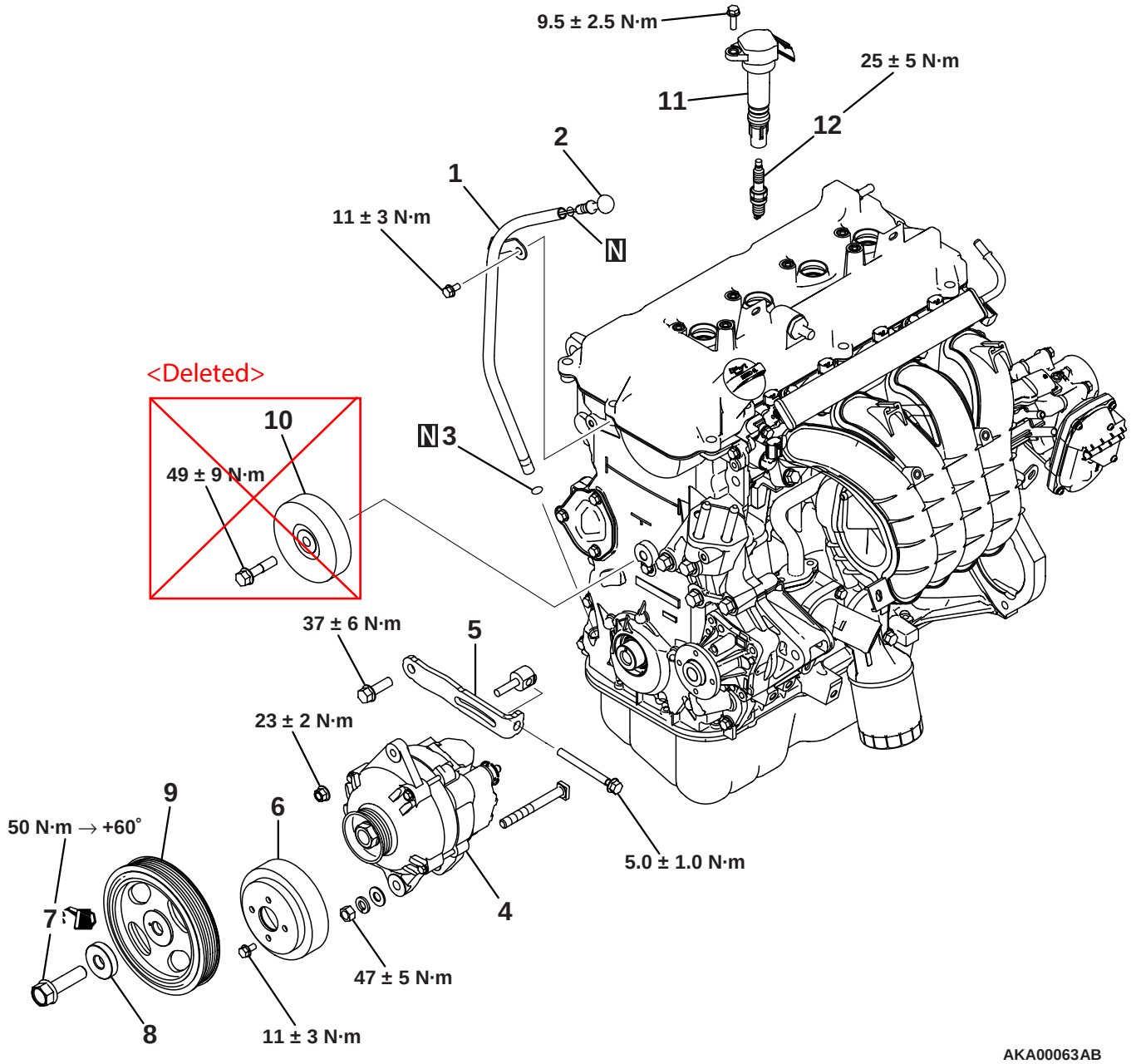

Removal steps

1. Oil level gauge guide
2. Oil level gauge
3. O-ring
4. Alternator
5. Alternator brace
6. Water pump pulley

<<*>> >>*<< 7. Crankshaft pulley centre bolt

>>*<< 8. Crankshaft pulley washer

Removal steps

>>*<< 9. Crankshaft pulley

<Deleted> ~~10. Tensioner pulley~~

11. Ignition coil
12. Spark plug

*NOTE: *: See the previous manual for the removal and installation service point not described here.*

Attached sheet11(1/2)

Insert the Attached sheet11(2/2)

REMOVAL AND INSTALLATION <Incorrect>

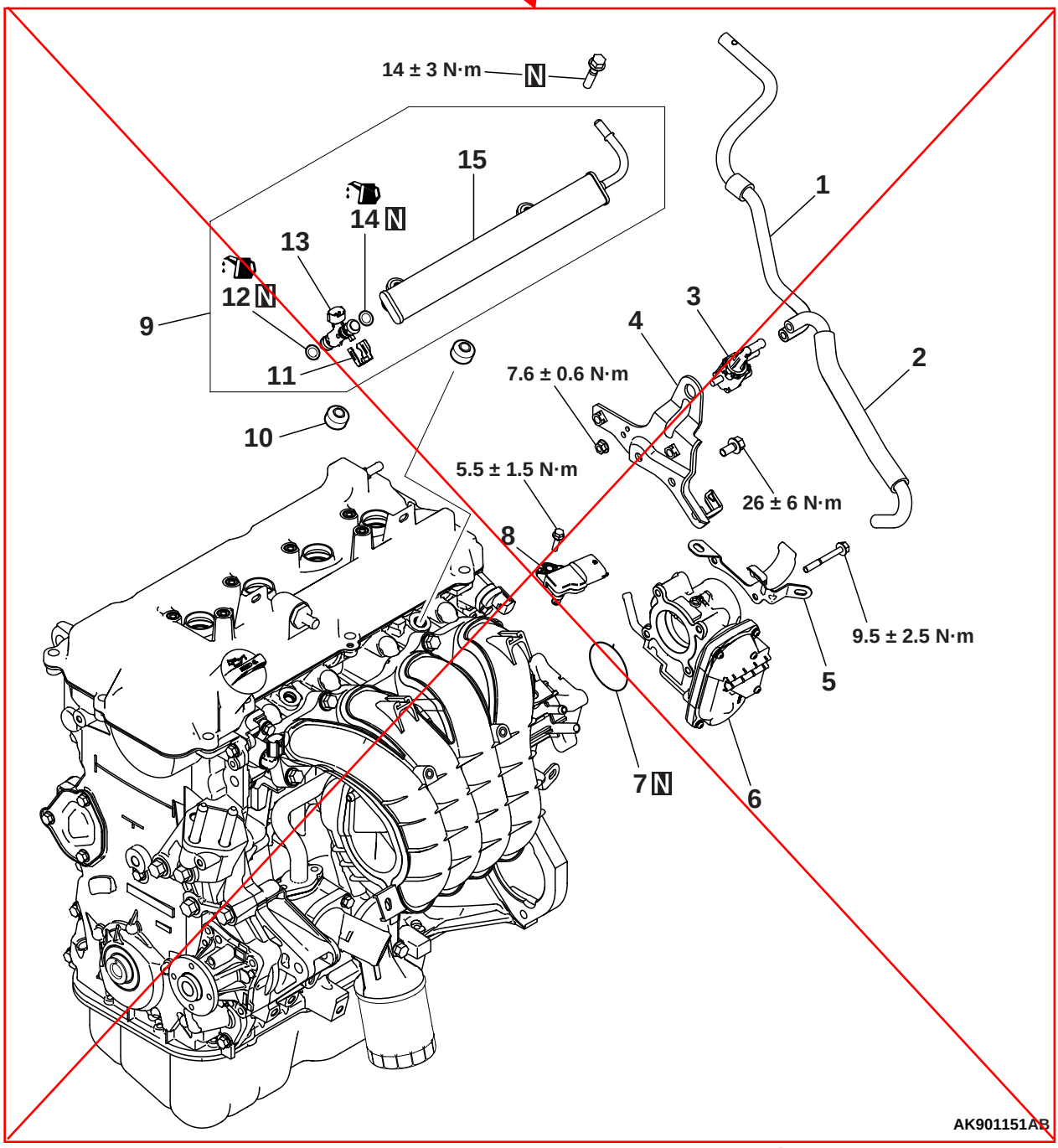

Removal steps

1. Vacuum hose
2. Vacuum hose
3. Solenoid valve
4. Engine hanger
5. Radiator upper hose clamp
6. Throttle body

>>C<< 7. Throttle body gasket

>>*<< 8. Manifold absolute pressure (MAP) sensor

>>*<< 9. Delivery pipe assembly

Removal steps

10. Insulator
11. Injection support
12. O-ring
13. Fuel injector
14. O-ring
15. Delivery pipe

*NOTE: *: See the previous manual for the removal and installation service point not described here.*

<Correct>

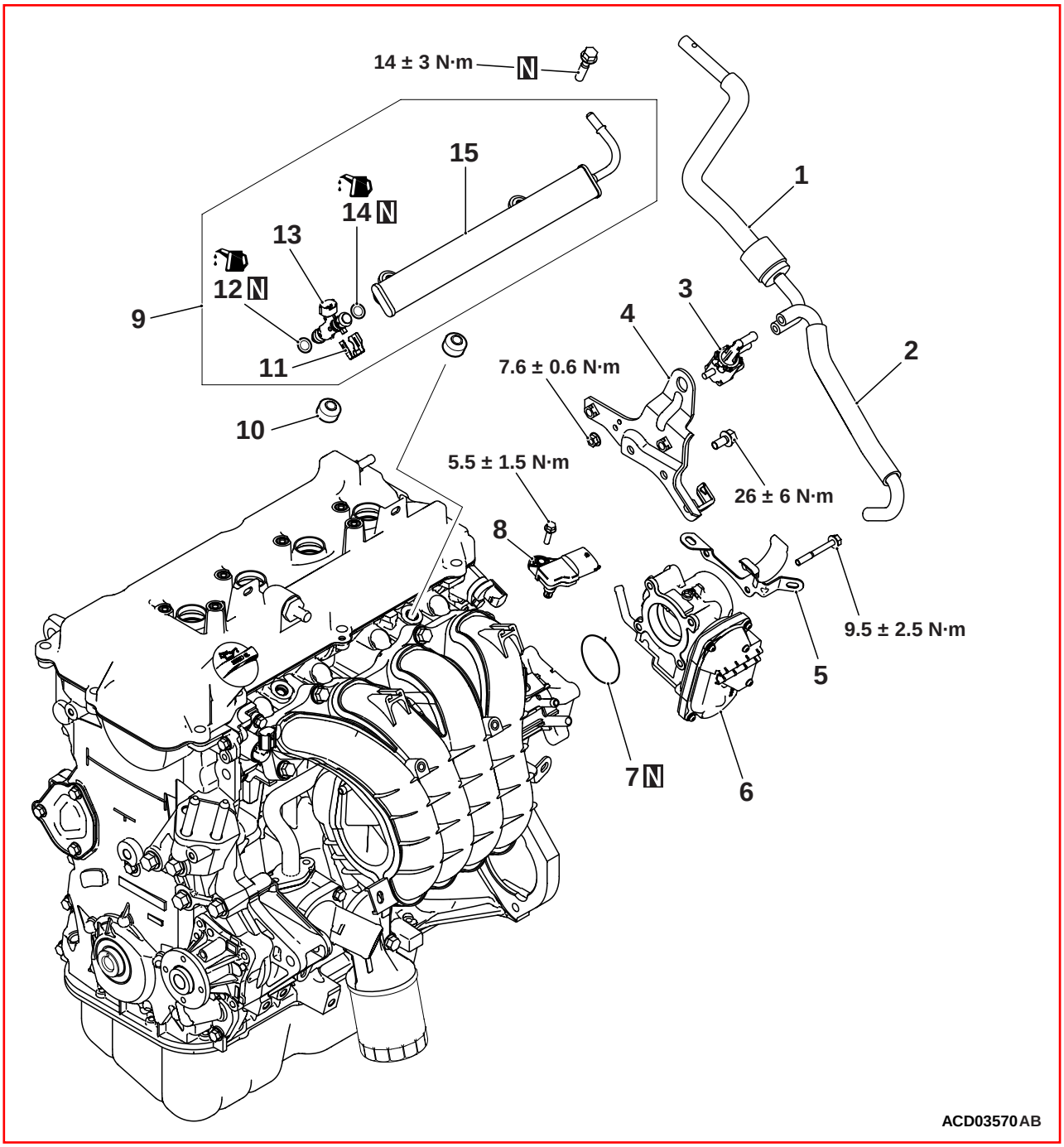
14 ± 3 N·m
N
15
1
14 N
13
12 N
9
3
4
2
7.6 ± 0.6 N·m
11
10
5.5 ± 1.5 N·m
26 ± 6 N·m
8
9.5 ± 2.5 N·m
5
7 N
6
ACD03570AB

Attached sheet12

<Added>

REMOVAL AND INSTALLATION <4A9>

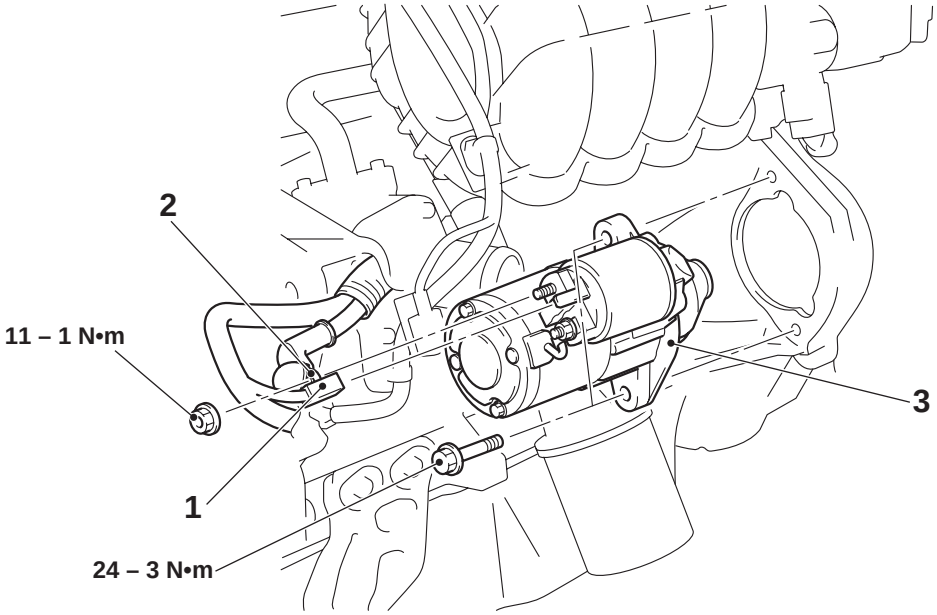

AC613543AB

Removal steps
1. Starter connector connection

<<A>>

Removal steps
2. Starter terminal connection
3. Starter assembly

REMOVAL SERVICE POINT

<<A>>STARTER ASSEMBLY REMOVAL
Remove the starter assembly from above the vehicle.

Attached sheet13(1/5)

<Incorrect>

REMOVAL AND INSTALLATION

CAUTION

On the flexible flywheel equipped engines, do not remove any of the bolts "A" of the flywheel shown in the illustration. The balance of the flexible flywheel is adjusted in an assembled condition. Removing the bolt, therefore, can cause the flexible flywheel to be out of balance giving and resulting in damage.

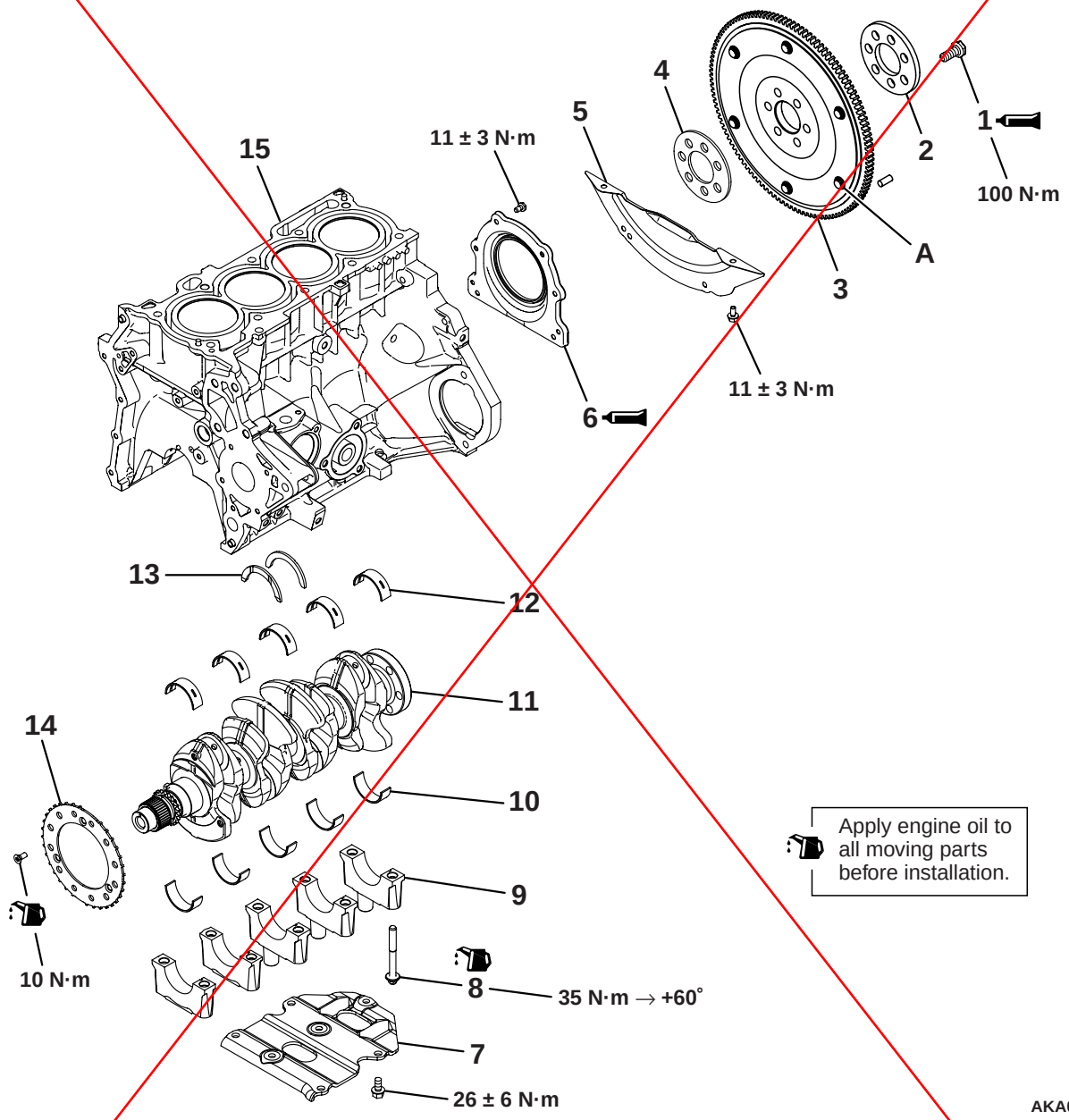

Removal steps

<<A>> >>H<< 1. Flywheel bolt
>>H<< 2. Adapter plate
>>H<< 3. Flexible flywheel
>>H<< 4. Adapter plate
5. Bell housing cover
>>G<< 6. Oil seal case
>>F<< 7. Stiffener
>>E<< 8. Crankshaft bearing cap bolt

Removal steps

>>E<< 9. Crankshaft bearing cap
>>D<< 10. Crankshaft bearing, lower
11. Crankshaft
>>C<< 12. Crankshaft bearing, upper
>>B<< 13. Thrust bearing
>>A<< 14. Crankshaft sensing ring
15. Cylinder block

Insert the Attached sheet13(2/5)

Attached sheet13(2/5)

<Correct>

REMOVAL AND INSTALLATION

CAUTION

On the flexible flywheel equipped engines, do not remove any of the bolts "A" of the flywheel shown in the illustration. The balance of the flexible flywheel is adjusted in an assembled condition. Removing the bolt, therefore, can cause the flexible flywheel to be out of balance giving and resulting in damage.

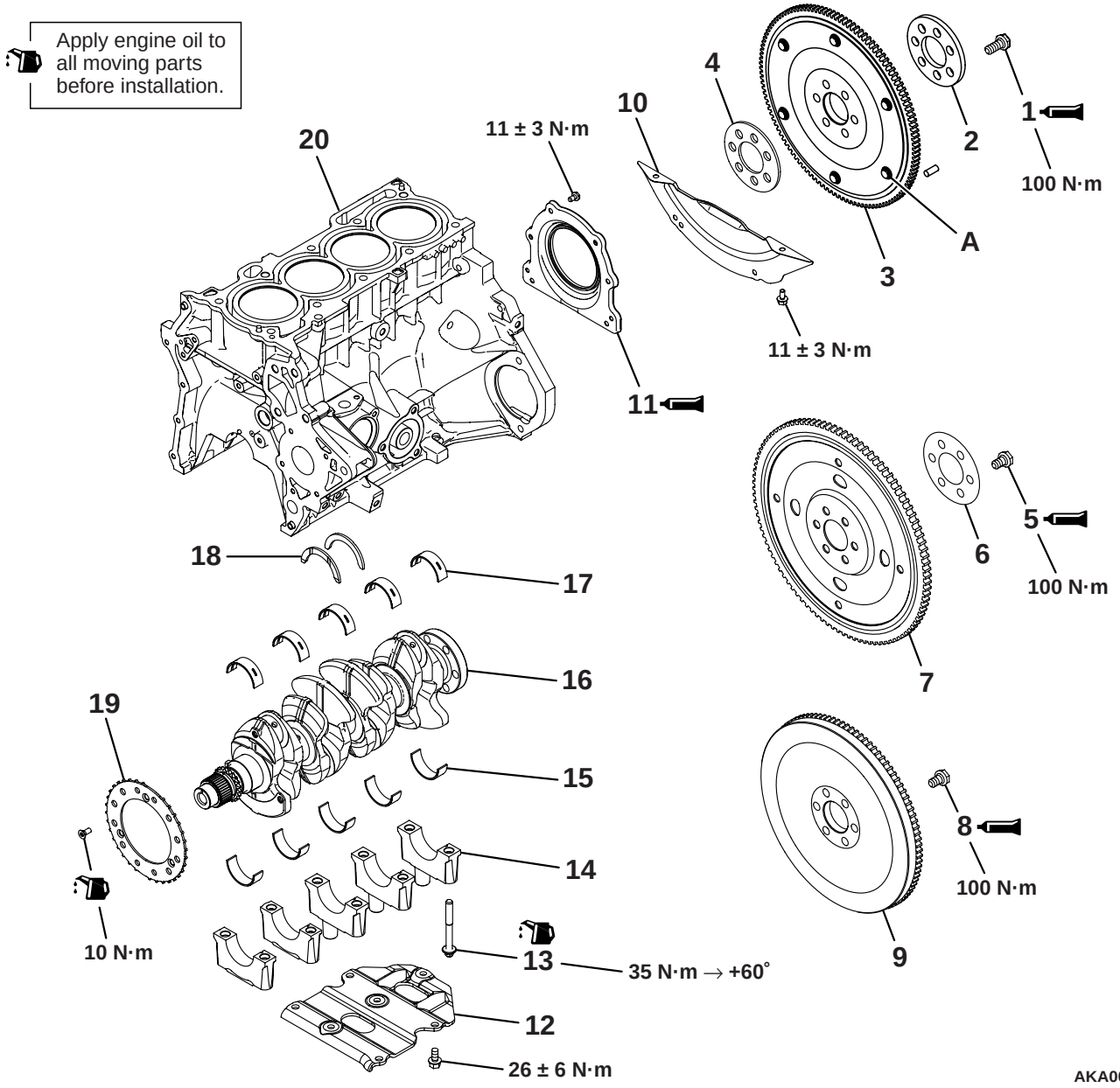

Removal steps

<<A>>	>>I<<	1.	Flywheel bolt <Euro5-M/T>
	>>I<<	2.	Adapter plate <Euro5-M/T>
	>>I<<	3.	Flexible flywheel <Euro5-M/T>
	>>I<<	4.	Adapter plate <Euro5-M/T>
<<A>>	>>H<<	5.	Drive plate bolt <A/T>
		6.	Adapter plate <A/T>
		7.	Drive plate <A/T>
<<A>>	>>H<<	8.	Flywheel bolt <Euro4-M/T>
		9.	Flywheel <Euro4-M/T>
		10.	Bell housing cover

Removal steps

>>G<<	11.	Oil seal case
>>F<<	12.	Stiffener
>>E<<	13.	Crankshaft bearing cap bolt
>>E<<	14.	Crankshaft bearing cap
>>D<<	15.	Crankshaft bearing, lower
	16.	Crankshaft
>>C<<	17.	Crankshaft bearing, upper
>>B<<	18.	Thrust bearing
>>A<<	19.	Crankshaft sensing ring
	20.	Cylinder block

<Added>
M/T

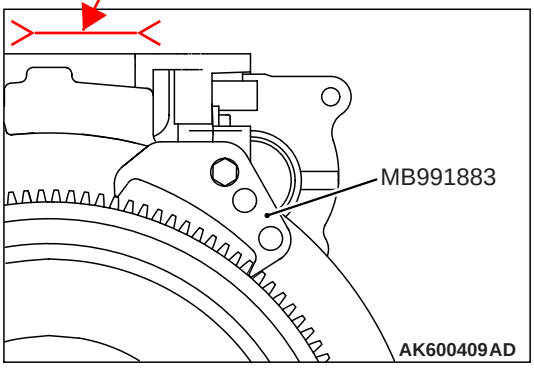

REMOVAL SERVICE POINT

<Incorrect>

~~**<<A>> FLYWHEEL BOLT REMOVAL**~~
~~1. Lock the flywheel using the special tool Flywheel stopper (MB991883).~~
~~2. Remove the flywheel bolt.~~

<<A>> DRIVE PLATE BOLT / FLYWHEEL BOLT REMOVAL
1. Lock the drive plate or flywheel using the special tool.

Special tool
- Flywheel stopper (MD998781)
- Flywheel stopper (MB991883)

2. Remove the drive plate bolt or flywheel bolt.

<Correct>

INSTALLATION SERVICE POINTS

>>A<< CRANKSHAFT SENSING RING INSTALLATION
1. Install the crankshaft sensing ring to the crankshaft after aligning a stamp to the position as shown in the illustration when the crankshaft is at No.1 TOP.
2. Apply engine oil to the crankshaft sensing ring screw.
3. Tighten the crankshaft sensing ring screws to 10 N·m in the steps given in the illustrated.

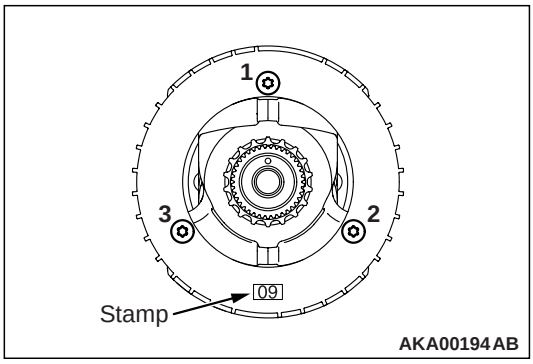

>>B<< THRUST BEARING INSTALLATION
1. Install the thrust bearing onto the cylinder block side of the No. 4 bearing. Apply engine oil to the thrust bearing to facilitate installation.
2. The thrust bearing should be installed such that its groove faces the crankshaft weight.

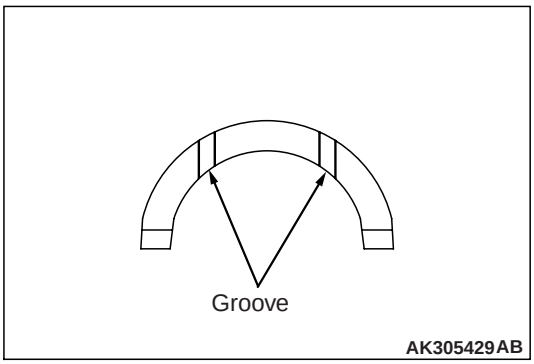

<Added>

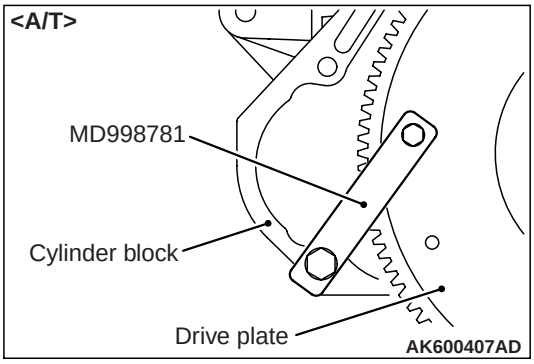

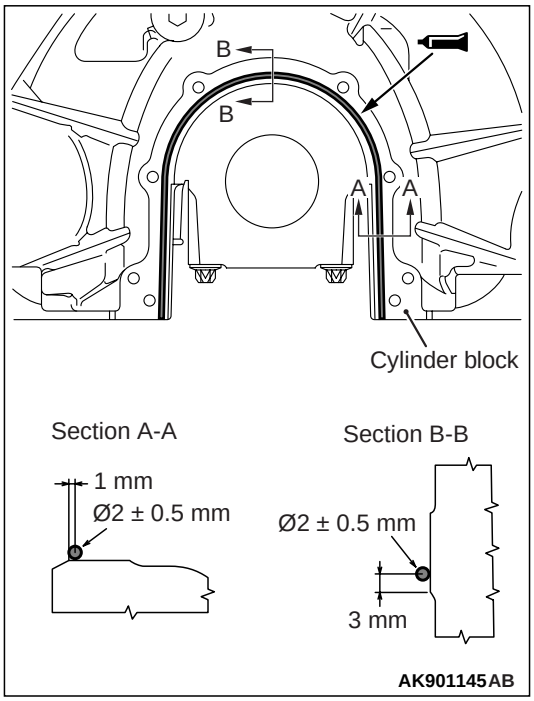

2. Apply a bead of specified sealant to the oil seal case mating surface of the cylinder block as shown.

   Specified sealant:
   Three bond 1217G or equivalent

CAUTION

Install the oil seal case not to damage the oil seal.

3. Within 10 minutes after applying the specified sealant, install the oil seal case to the cylinder block.
4. Tighten the oil seal case mounting bolts to the specified torque.

   Tightening torque: 11 ± 3 N·m

Insert the Attached sheet13(5/5)

<Incorrect>

<Correct>

>>H<< ADAPTER PLATE / FLEXIBLE FLYWHEEL / ADAPTER PLATE /FLYWHEEL BOLT INSTALLATION

1. Install two adapter plates to the flexible flywheel, turning the chamfered surface toward the inside.
2. Remove any sealant remaining on the flywheel bolt or the threaded hole in the crankshaft.

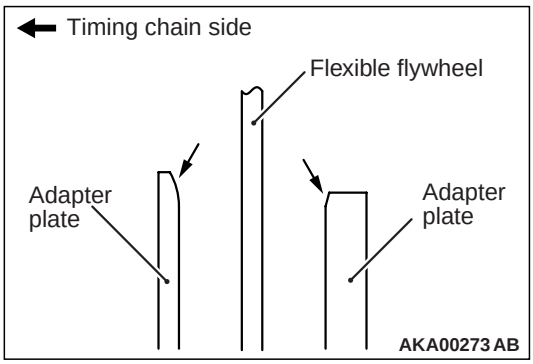

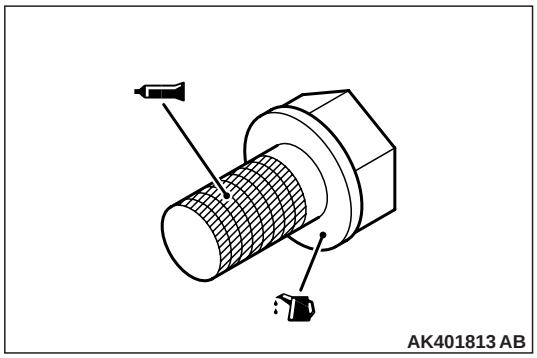

3. Apply a small amount of engine oil the installation face of the flywheel bolt.

CAUTION

Apply sealant correctly so that it will not be squeezed out onto the end of the threaded portion upon assembly.

4. Apply sealant to the threaded portion of the flywheel bolt as illustrated.

   Specified sealant:
   Three bond 1324N or equivalent

<Added>

Attached sheet13(5/5)

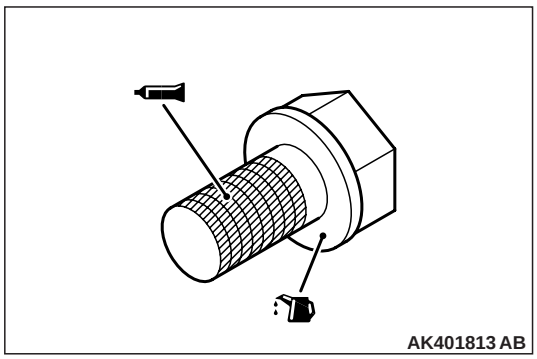

>>H<< DRIVE PLATE BOLT / FLYWHEEL BOLT INSTALLATION

1. Remove any sealant remaining on the drive plate bolt or the threaded hole in the crankshaft.
2. Apply a small amount of engine oil the installation face of the flywheel bolt or drive plate bolt.

⚠ CAUTION

Apply sealant correctly so that it will not be squeezed out onto the end of the threaded portion upon assembly.

3. Apply sealant to the threaded portion of the drive plate bolt as illustrated.

   Specified sealant:
   Three bond 1324N or equivalent

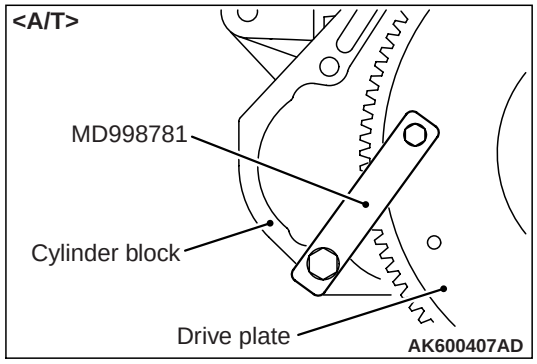

4. Fix the drive plate or flywheel in place using the special tool.

Special tool

- Flywheel stopper (MD998781)
- Flywheel stopper (MB991883)

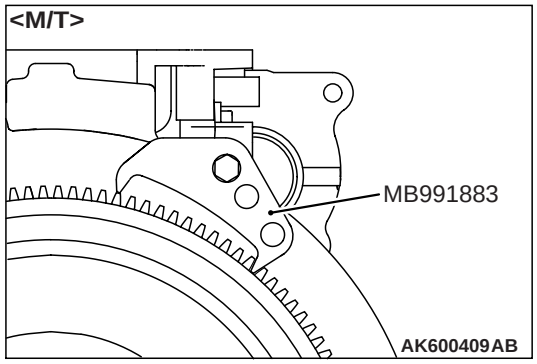

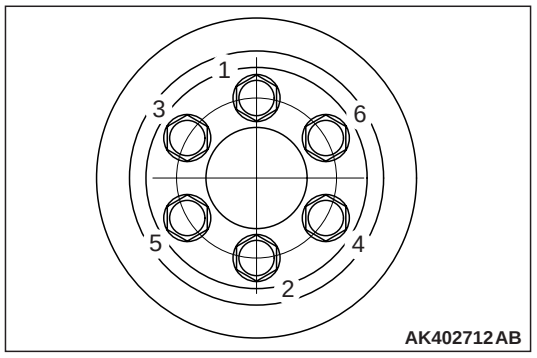

5. In accordance with the numerical order shown in the illustration, tighten the drive plate bolt or flywheel bolt to the specified torque of 100 N·m in several steps.

Attached sheet14(1/5)

<Incorrect>

REMOVAL AND INSTALLATION

CAUTION

On the flexible flywheel equipped engines, do not remove any of the bolts "A" of the flywheel shown in the illustration. The balance of the flexible flywheel is adjusted in an assembled condition. Removing the bolt, therefore, can cause the flexible flywheel to be out of balance giving and resulting in damage.

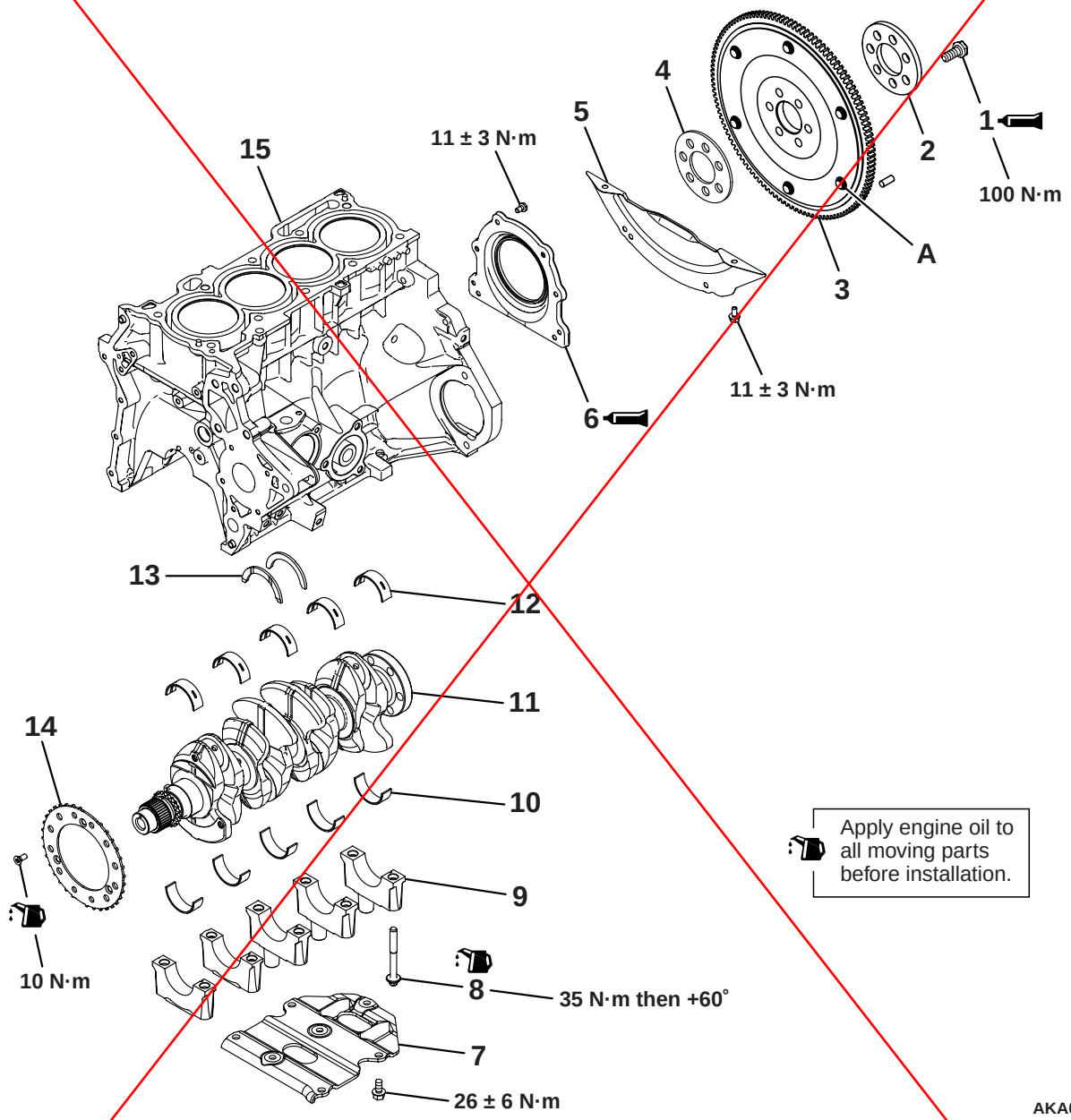

Removal steps

<<A>> >>H<< 1. Flywheel bolt
>>H<< 2. Adapter plate
>>H<< 3. Flexible flywheel
>>H<< 4. Adapter plate
5. Bell housing cover
>>G<< 6. Oil seal case
>>F<< 7. Stiffener
>>E<< 8. Crankshaft bearing cap bolt

Removal steps

>>E<< 9. Crankshaft bearing cap
>>D<< 10. Crankshaft bearing, lower
11. Crankshaft
>>C<< 12. Crankshaft bearing, upper
>>B<< 13. Thrust bearing
>>A<< 14. Crankshaft sensing ring
15. Cylinder block

Insert the Attached sheet14(2/5)

Attached sheet14(2/5)

<Correct>

REMOVAL AND INSTALLATION

CAUTION

On the flexible flywheel equipped engines, do not remove any of the bolts "A" of the flywheel shown in the illustration. The balance of the flexible flywheel is adjusted in an assembled condition. Removing the bolt, therefore, can cause the flexible flywheel to be out of balance giving and resulting in damage.

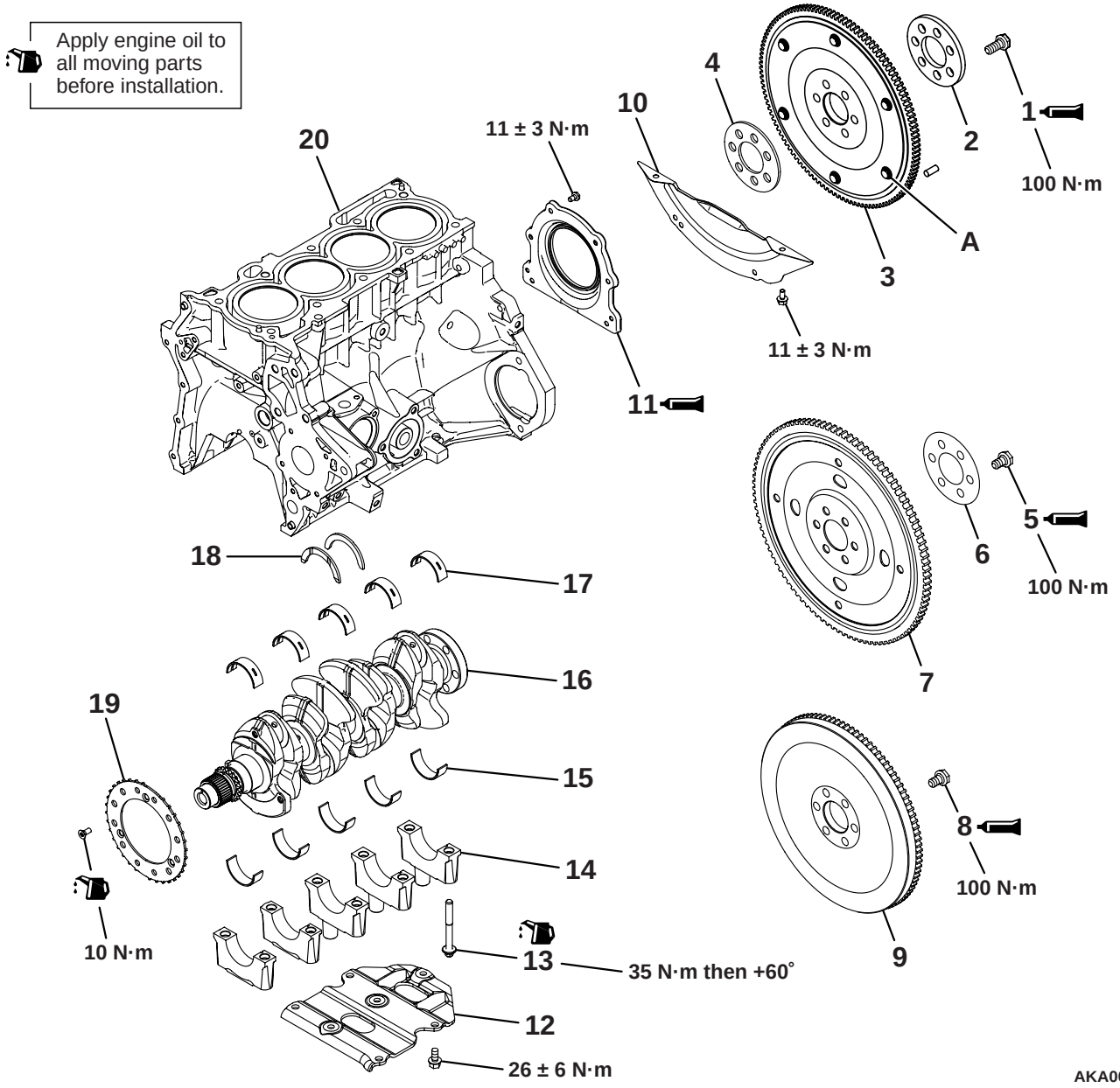

Removal steps

<<A>>	>>I<<	1.	Flywheel bolt <Euro5-M/T>
	>>I<<	2.	Adapter plate <Euro5-M/T>
	>>I<<	3.	Flexible flywheel <Euro5-M/T>
	>>I<<	4.	Adapter plate <Euro5-M/T>
<<A>>	>>H<<	5.	Drive plate bolt <A/T>
		6.	Adapter plate <A/T>
		7.	Drive plate <A/T>
<<A>>	>>H<<	8.	Flywheel bolt <Euro4-M/T>
		9.	Flywheel <Euro4-M/T>
		10.	Bell housing cover

Removal steps

>>G<<	11.	Oil seal case
>>F<<	12.	Stiffener
>>E<<	13.	Crankshaft bearing cap bolt
>>E<<	14.	Crankshaft bearing cap
>>D<<	15.	Crankshaft bearing, lower
	16.	Crankshaft
>>C<<	17.	Crankshaft bearing, upper
>>B<<	18.	Thrust bearing
>>A<<	19.	Crankshaft sensing ring
	20.	Cylinder block

<Added>
M/T

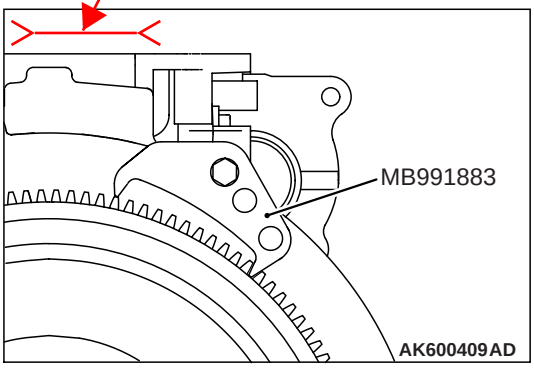

REMOVAL SERVICE POINT

<Incorrect>

~~**<<A>> FLYWHEEL BOLT REMOVAL**~~
~~1. Lock the flywheel using the special tool Flywheel stopper (MB991883).~~
~~2. Remove the flywheel bolt.~~

<<A>> DRIVE PLATE BOLT / FLYWHEEL BOLT REMOVAL
1. Lock the drive plate or flywheel using the special tool.

Special tool
- Flywheel stopper (MD998781)
- Flywheel stopper (MB991883)

2. Remove the drive plate bolt or flywheel bolt.

<Correct>

INSTALLATION SERVICE POINTS

>>A<< CRANKSHAFT SENSING RING INSTALLATION
1. Install the crankshaft sensing ring to the crankshaft after aligning a stamp to the position as shown in the illustration when the crankshaft is at No.1 TOP.
2. Apply engine oil to the crankshaft sensing ring screw.
3. Tighten the crankshaft sensing ring screws to 10 N·m in the steps given in the illustrated.

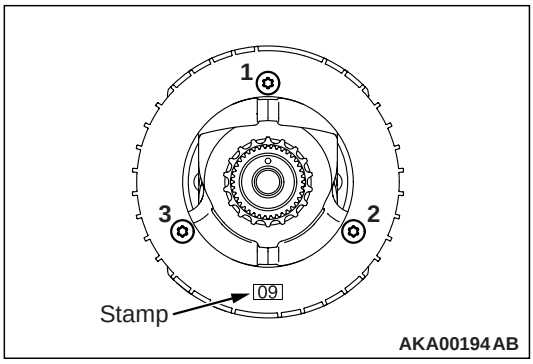

>>B<< THRUST BEARING INSTALLATION
1. Install the thrust bearing onto the cylinder block side of the No. 4 bearing. Apply engine oil to the thrust bearing to facilitate installation.
2. The thrust bearing should be installed such that its groove faces the crankshaft weight.

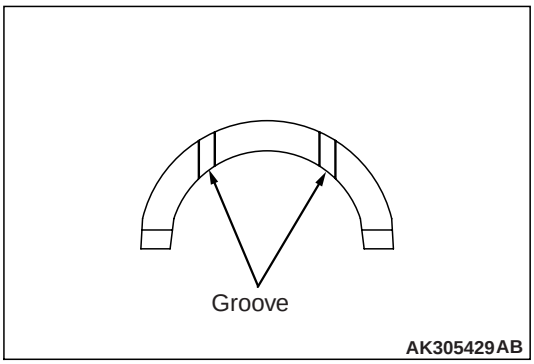

<Added>

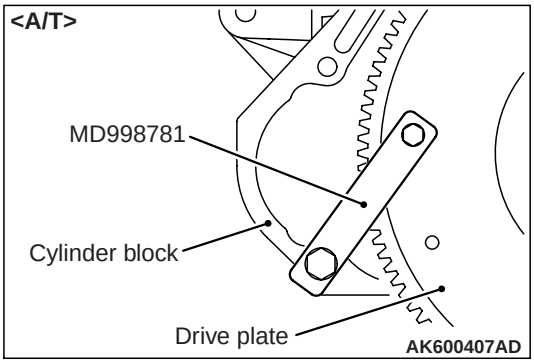

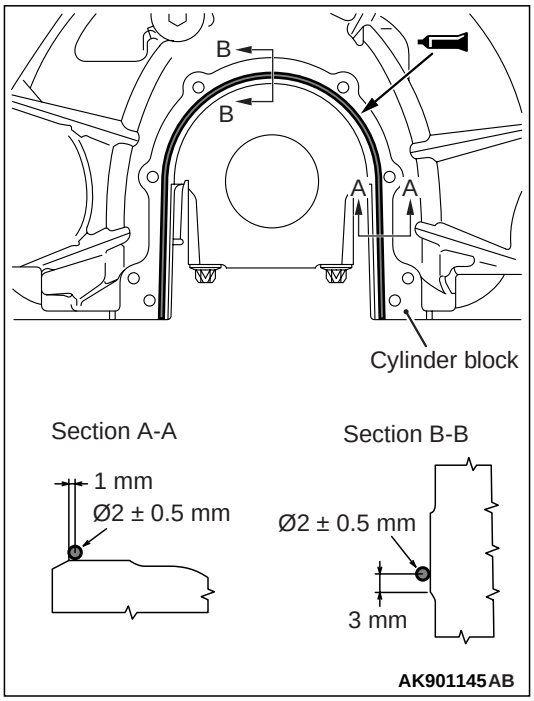

2. Apply a bead of specified sealant to the oil seal case mating surface of the cylinder block as shown.

   Specified sealant:
   Three bond 1217G or equivalent

⚠ CAUTION
Install the oil seal case not to damage the oil seal.

3. Within 10 minutes after applying the specified sealant, install the oil seal case to the cylinder block.
4. Tighten the oil seal case mounting bolts to the specified torque.

   Tightening torque: 11 ± 3 N·m

Insert the Attached sheet14(5/5)

<Incorrect>

<Correct>

>>H<< ADAPTER PLATE / FLEXIBLE FLYWHEEL / ADAPTER PLATE /FLYWHEEL BOLT INSTALLATION

1. Install two adapter plates to the flexible flywheel, turning the chamfered surface toward the inside.
2. Remove any sealant remaining on the flywheel bolt or the threaded hole in the crankshaft.

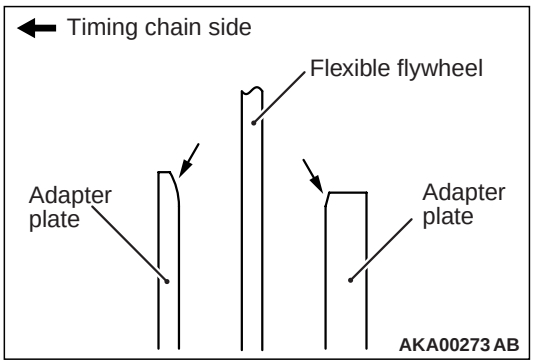

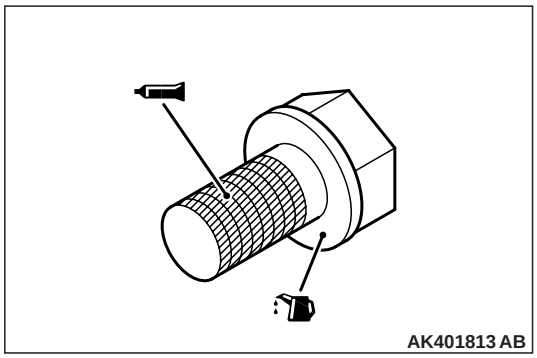

3. Apply a small amount of engine oil the installation face of the flywheel bolt.

⚠ CAUTION
Apply sealant correctly so that it will not be squeezed out onto the end of the threaded portion upon assembly.

4. Apply sealant to the threaded portion of the flywheel bolt as illustrated.

   Specified sealant:
   Three bond 1324N or equivalent

<Added>

Attached sheet14(5/5)

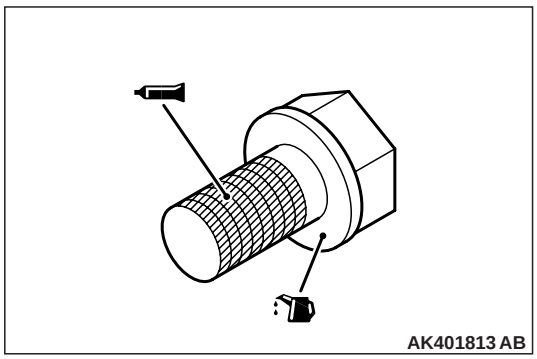

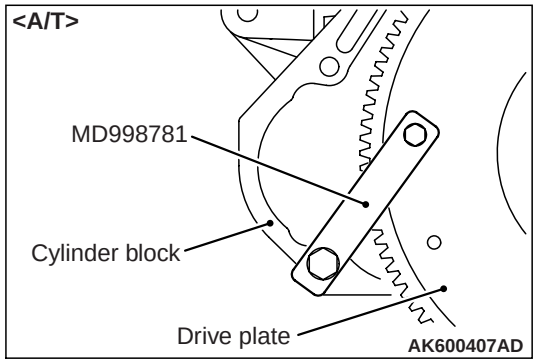

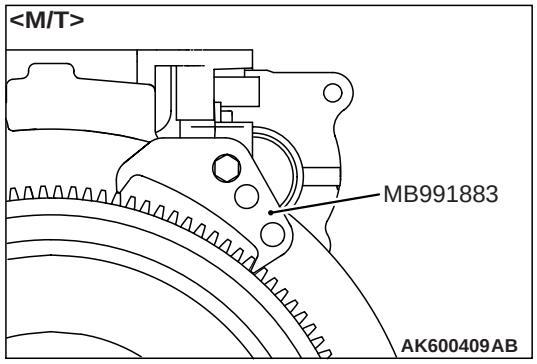

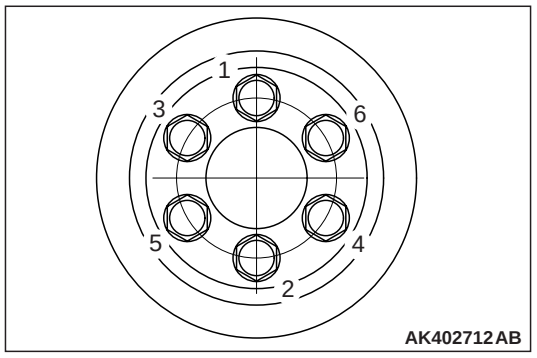

>>H<< DRIVE PLATE BOLT / FLYWHEEL BOLT INSTALLATION

1. Remove any sealant remaining on the drive plate bolt or the threaded hole in the crankshaft.
2. Apply a small amount of engine oil the installation face of the flywheel bolt or drive plate bolt.

⚠ CAUTION

Apply sealant correctly so that it will not be squeezed out onto the end of the threaded portion upon assembly.

3. Apply sealant to the threaded portion of the drive plate bolt as illustrated.

   Specified sealant:
   Three bond 1324N or equivalent

4. Fix the drive plate or flywheel in place using the special tool.

Special tool

- Flywheel stopper (MD998781)
- Flywheel stopper (MB991883)

5. In accordance with the numerical order shown in the illustration, tighten the drive plate bolt or flywheel bolt to the specified torque of 100 N·m in several steps.