SERVICE BULLETIN

MITSUBISHI MOTORS

GLOBAL AFTER SALES OFFICE, MITSUBISHI MOTORS CORPORATION

PURPOSE : INFORMATION	ISSUE NO. : MSB-13EXL00-003	DATE : 2013-04-01
SUBJECT : REAR END CROSSMEBER		<Destination/Model> (EUR/RUSSIA/MMAL/NZ/CHINA) <M/Y> 13
GROUP : GENERAL		OUTLANDER(GF0W)

1. Description :

See the attached document for the information about the change of mention in the applicable service manual.

2. Applicable service manual :

Applicable manual	Pub. No.	Applicable table	Content
2013 OUTLANDER Workshop Manual	CGFE13E1-CD (ENG) CGFF13E1-CD (FRE) CGFG13E1-CD (GER) CGFS13E1-CD (SPA) CGFI13E1-CD (ITA) RUSSIA:N/A	REAR END CROSSMEMBER (M030-01-500-74300-01)	Attached sheet 2

<MMAL, NZ, CHINA>

Applicable manual	Pub. No.	Applicable table	Content
2013 OUTLANDER Workshop Manual	AU900304 NZ/CHINA:DRAFT	REAR END CROSSMEMBER (M030-01-500-74300-01)	Attached sheet 2

3. Details :

See the attached document

※Time for enforcement : From the first produced vehicle

Attached sheet 2 (1/2)

REAR END CROSSMEMBER

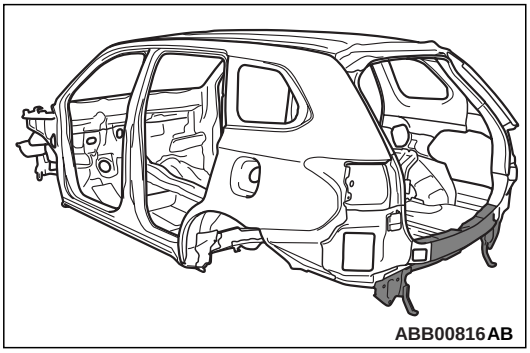

Symbol	Operation description
● ● ● ●	Spot welding
■ ■ ▲ ▲	MIG plug welding (■: indicates two panels to be welded ▲: indicates three panels to be welded)
++++	MIG spot welding
|||||||||||	MIG arc welding (continuous)
∞∞∞∞∞∞∞∞	Braze welding
	Anti-corrosion agent application locations (Use access holes to apply liberally to butt-welded joints.)

REPAIR WELDS

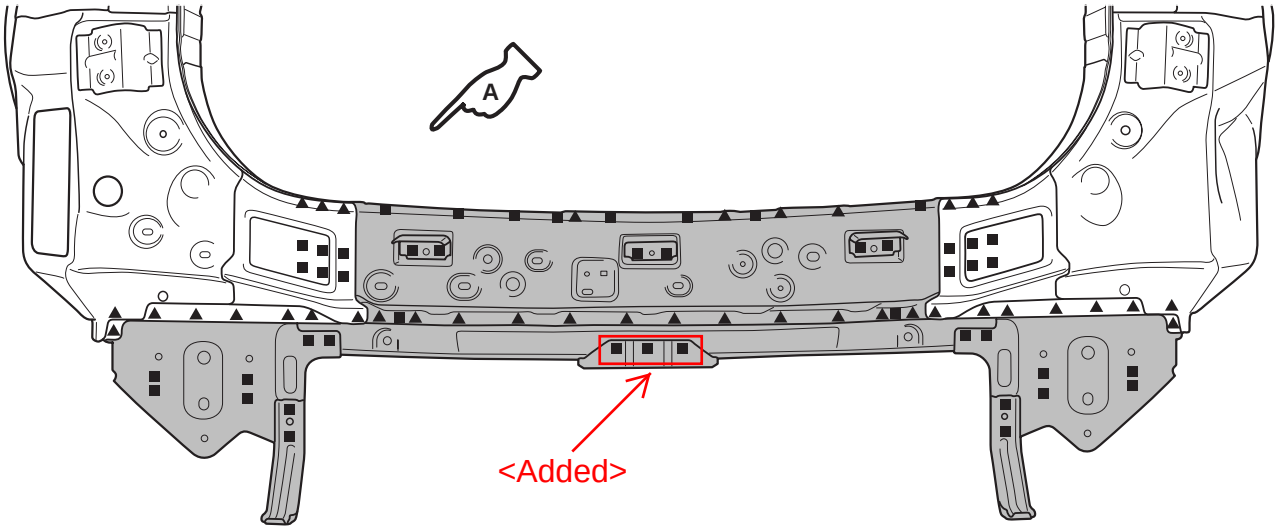

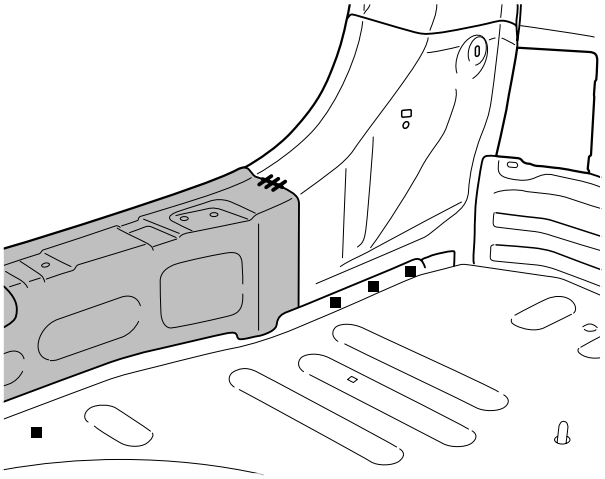

A

ABB00821AB

Insert attached sheet 2 (2/2)

NOTE ON REPAIR WORK

REMOVAL

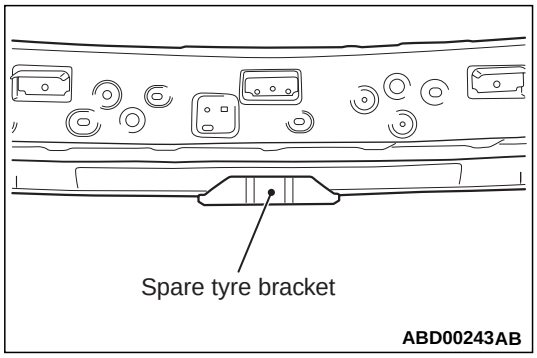

To remove the rear end panel, remove the spare tyre bracket as it interferes with the rear floor.

INSTALLATION

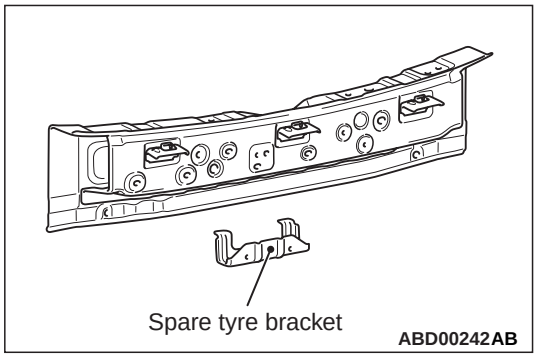

When installing the new rear end panel parts, remove the spare tyre bracket from the rear end panel. Install the rear end panel, and then install the spare tyre bracket.