MITSUBISHI MOTORS

SERVICE BULLETIN

GLOBAL AFTER SALES OFFICE, MITSUBISHI MOTORS CORPORATION

PURPOSE : CHANGE	ISSUE NO. : MSB-13EXL16-001	DATE : 2013-08-06
SUBJECT : SPARK PLUG CHECK, CLEANING AND REPLACEMENT		<Destination/Model> (EUR/MMAL/NZ) <M/Y> 14
GROUP : ENGINE ELECTRICAL(Gr:16)		OUTLANDER PHEV(GF0W)

1. Description :

Please refer to the attached document for the information about the change of mention in the applicable service manual. The spark plug has been changed from DIFR6C11 to DIFR5C11.

2. Applicable service manual :

Please refer to the attached document
※ Attached sheet 3 for EUR
※ Attached sheet 4 for MMAL/NZ

3. About the details :
Please refer to the attached document (Attached 1)

4. Effective time : From beginning of August, 2013 production

5. Related EO : EO QT0888

The new spark plug "DIFR5C11" can be used to the old vehicle whose spark plug is "DIFR6C11"

Attached 1

EU

Applicable manual	Pub. No.	Applicable title(Info-ID)	Content
2014 OUTLANDER/ OUTLANDER PHEV Workshop Manual	CGFE14E1-CD(English) CGFF14E1-CD(French) CGFG14E1-CD(German) CGFS14E1-CD(Spanish) CGFI14E1-CD(Italian)	SPARK PLUG CHECK, CLEANING AND REPLACEMENT (M163-00-432-97300-01)	Attached sheet 3

AUSTRALIA, NEW ZEALAND

Applicable manual	Pub. No.	Applicable title(Info-ID)	Content
2014 OUTLANDER/ OUTLANDER PHEV Workshop Manual	AU900408 (AUSTRALIA), DRAFT(NEW ZEALAND)	SPARK PLUG CHECK, CLEANING AND REPLACEMENT (M163-00-432-99500-01)	Attached sheet 4

SPARK PLUG CHECK AND CLEANING

⚠ CAUTION

- **Never attempt to adjust the gap of the iridium plug.**
- **Do not attempt to clean the iridium plug using a wire brush because it may result in damage to the electrode. When the iridium plug is cleaned, special tool spark plug brush (MB992273).**

NOTE: Obey the maintenance interval of the relevant vehicle for the spark plug replacement. If the plug gap and insulation resistance are normal, check the plug condition and clean if necessary.

SPARK PLUG GAP CHECK

Check the plug gap with the wire type plug gap gauge. Replace it if the limit is exceeded.

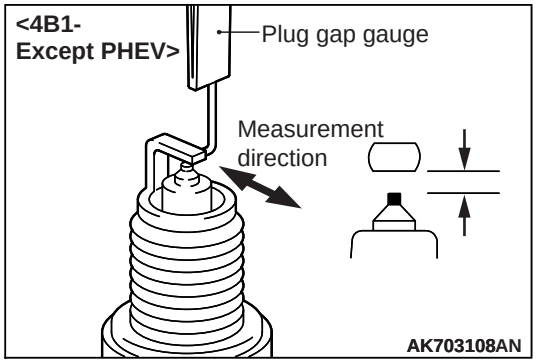

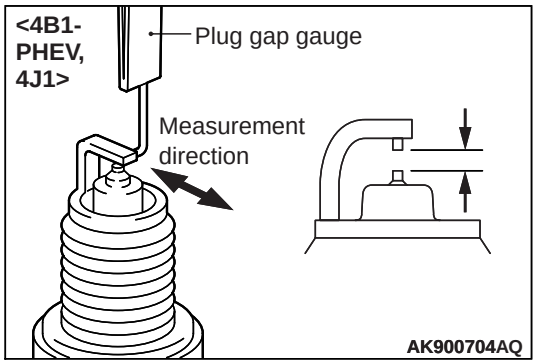

Standard value, limit:

<4B1-Except PHEV>

Manufacturer	Type	Standard value (mm)	Limit (mm)
NGK	<4B11> FR6EI <4B12> FR5EI	0.7 – 0.8	1.2
DENSO	<4B11> K20PSR-B8 <4B12> K16PSR-B8	0.7 – 0.8	1.2

<4B1-PHEV>

Manufacturer	Type <Old>	Standard value (mm)	Limit (mm)
NGK	~~DIFR6C11~~	1.0 – 1.1	1.3

<New>
DIFR5C11

<4J1>

Manufacturer	Type	Standard value (mm)	Limit (mm)
NGK	DILKR6D11G	1.0 – 1.1	1.3

Attached sheet 4

SPARK PLUG CHECK AND CLEANING

CAUTION

- **Never attempt to adjust the gap of the iridium plug.**
- **Do not attempt to clean the iridium plug using a wire brush because it may result in damage to the electrode. When the iridium plug is cleaned, special tool spark plug brush (MB992273).**

NOTE: Obey the maintenance interval of the relevant vehicle for the spark plug replacement. If the plug gap and insulation resistance are normal, check the plug condition and clean if necessary.

SPARK PLUG GAP CHECK

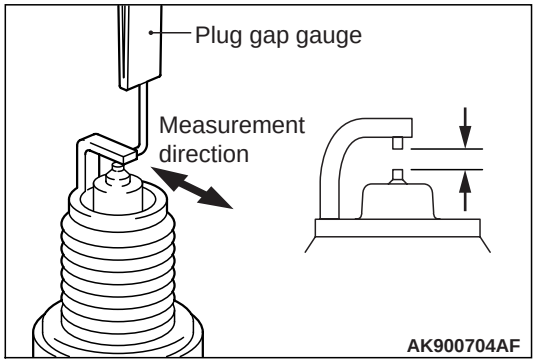

Check the plug gap with the wire type plug gap gauge. Replace it if the limit is exceeded.

Standard value, limit:

Manufacturer	Type <Old>	Standard value (mm)	Limit (mm)
NGK	~~DIFR6C11~~	1.0 – 1.1	1.3

<New>
DIFR5C11

SPARK PLUG INSULATION RESISTANCE CHECK

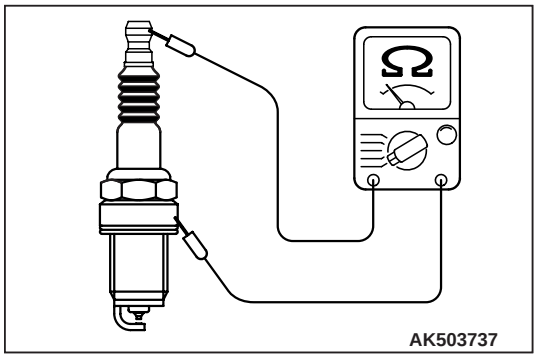

1. Measure the insulation resistance of the spark plug. If the insulation resistance of the spark plug is under the limited value, clean the spark plug (Refer to).
2. After cleaning, measure the insulation resistance again. Replace the plug unless it is within the limited value.

   Limit: Minimum 10 MΩ

SPARK PLUG CLEANING

1. Sufficiently apply the brake cleaner to the plug end.

   NOTE: Repeatedly applying the brake cleaner is acceptable during the cleaning.