SERVICE BULLETIN

MITSUBISHI MOTORS

GLOBAL AFTER SALES OFFICE, MITSUBISHI MOTORS CORPORATION

PURPOSE : INFORMATION	ISSUE NO. : MSB-13EXL22-002	DATE : 2013-04-09
SUBJECT : TRANSMISSION OIL LEVEL CHECK		<Destination/Model> (EUR/G.EXP/NZ/MMAL) <M/Y> 03-11
GROUP : MANUAL TRANSMISSION		COLT/COLT CZ3/COLT CZT/COLT PLUS

1. Description :

See the attached document for the information about the change of mention in the applicable service manual.

2. Applicable service manual :

See the attached document

3. Details :

See the attached document

Applicable Service Manuals

EU

Applicable manual	Pub. No.	Applicable title (INFO ID)	Contents
2005-2007 COLT/COLT CZ3/COLT CZT Workshop Manual	CZME07E1-CD (English) CZMS07E1-CD (Spanish) CZMF07E1-CD (French) CZMG07E1-CD (German)	Gr22A: TRANSMISSION OIL LEVEL CHECK (M221-00-090-50900-01)	<2005> Attached sheet 8 <2006, 2007> Attached sheet 9
2008 COLT Workshop Manual	CZME08E1-CD (English) CZMS08E1-CD (Spanish) CZMF08E1-CD (French) CZMG08E1-CD (German)	Gr22A: TRANSMISSION OIL LEVEL CHECK (M221-00-090-50900-01)	Attached sheet 9
2009 COLT Workshop Manual	CZME09E2-CD (English) CZMS09E2-CD (Spanish) CZMF09E2-CD (French) CZMG09E2-CD (German) CZMI09E2-CD (Italian)	Gr22A: TRANSMISSION OIL LEVEL CHECK (M221-00-090-50901-01)	Attached sheet 10
2011 COLT Workshop Manual	CZME11E1-CD (English) CZMS11E1-CD (Spanish) CZMF11E1-CD (French) CZMG11E1-CD (German) CZMI11E2-CD (Italian)	Gr22A: TRANSMISSION OIL LEVEL CHECK (M221-00-090-50901-01)	Attached sheet 11

G.EXP/MMAL/NZ

Applicable manual	Pub. No.	Applicable title (INFO ID)	Contents
2003-2007 COLT/COLT PLUS Workshop Manual	PWPE0402R-4 (G.EXP) DRAFT (NZ) DRAFT(MMAL)	Gr22A: TRANSMISSION OIL LEVEL CHECK (M221-00-090-61700-01)	Attached sheet 12
2011 COLT/COLT PLUS Workshop Manual	PWPE1001R(G.EXP) DRAFT (NZ) DRAFT(MMAL)	Gr22A: TRANSMISSION OIL LEVEL CHECK (M221-00-090-61700-01)	Attached sheet 12

MMAL/NZ

Applicable manual	Pub. No.	Applicable title (INFO ID)	Contents
2006 COLT Workshop Manual	DRAFT(MMAL/NZ)	Gr22A: TRANSMISSION OIL LEVEL CHECK (M221-00-090-61700-01)	Attached sheet 13
2007 COLT Workshop Manual	MR936106(MMAL) DRAFT (NZ)	Gr22A: TRANSMISSION OIL LEVEL CHECK (M221-00-090-61700-01)	Attached sheet 13

<New>

TRANSMISSION OIL LEVEL CHECK

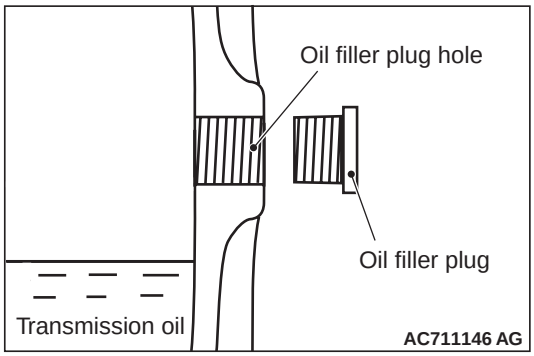

1. Remove the oil filler plug.

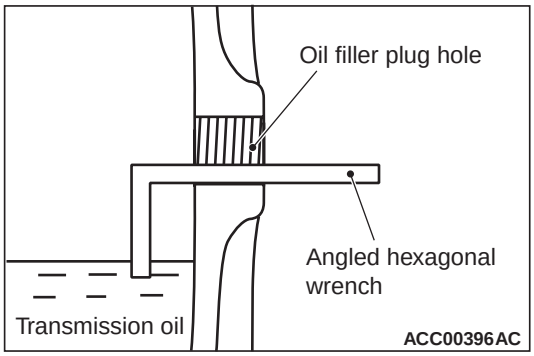

2. Insert an angled hexagonal wrench (4 mm) into the oil filler plug hole as shown.

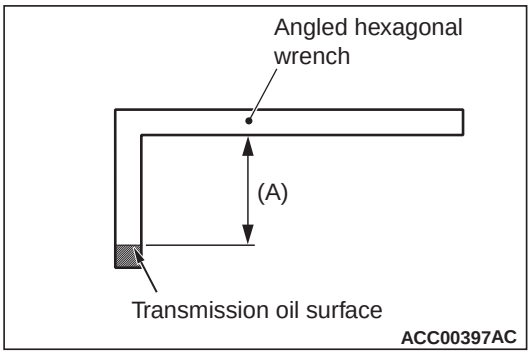

3. Check that the shown dimension (A) meets the following value:
   - <134, 135> 8 mm or less
   - <639> 13 mm or less
4. Check that the oil is not noticeably dirty.
5. Tighten the filler plug to the specified torque.

   Tightening torque: 43 ± 3 N·m

<Old>

TRANSMISSION OIL LEVEL CHECK

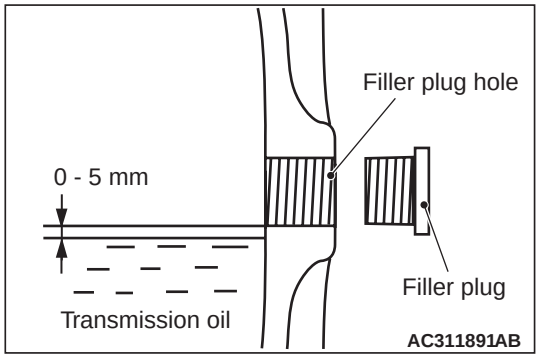

1. Remove the filler plug.
2. Check that the oil level is with in 0 – 5 mm from the lower edge of the filler plug hole.
3. Check that the oil is not noticeably dirty.
4. Tighten the filler plug to the specified torque.

   Tightening torque: 43 ± 3 N·m

<New>

TRANSMISSION OIL LEVEL CHECK

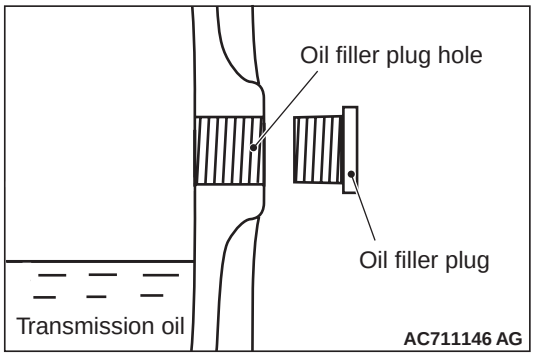

1. Remove the oil filler plug.

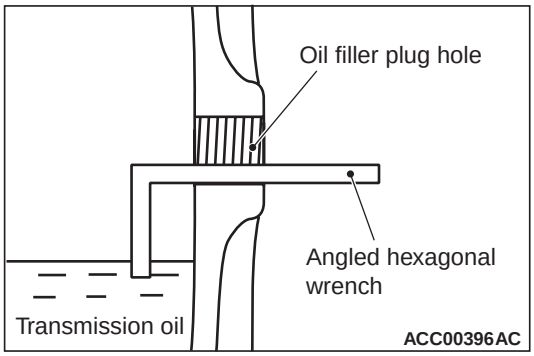

2. Insert an angled hexagonal wrench (4 mm) into the oil filler plug hole as shown.

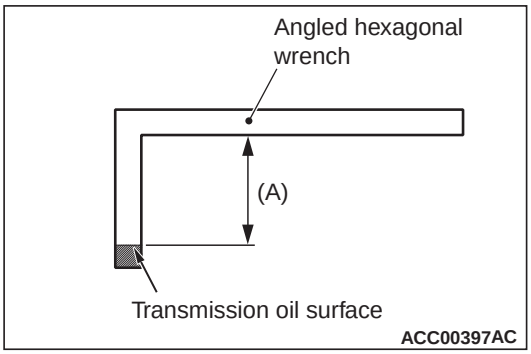

3. Check that the shown dimension (A) meets the following value:
   - <134, 135> 8 mm or less
   - <639> 13 mm or less
   - <4G1> 22 mm or less
4. Check that the oil is not noticeably dirty.
5. Tighten the filler plug to the specified torque.

   Tightening torque: 43 ± 3 N·m

<Old>

TRANSMISSION OIL LEVEL CHECK

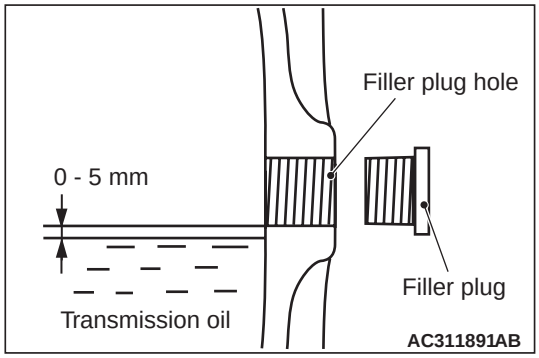

1. Remove the filler plug.
2. Check that the oil level is with in 0 – 5 mm from the lower edge of the filler plug hole.
3. Check that the oil is not noticeably dirty.
4. Tighten the filler plug to the specified torque.

   Tightening torque: 43 ± 3 N·m

<New>

TRANSMISSION OIL LEVEL CHECK

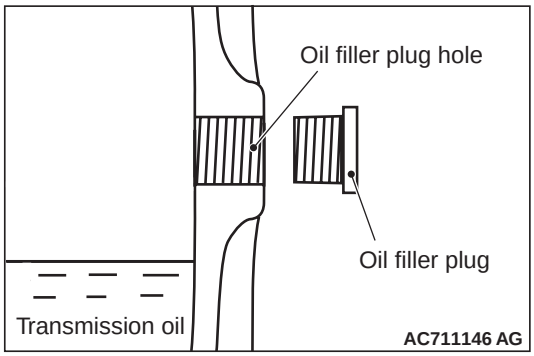

1. Remove the oil filler plug.

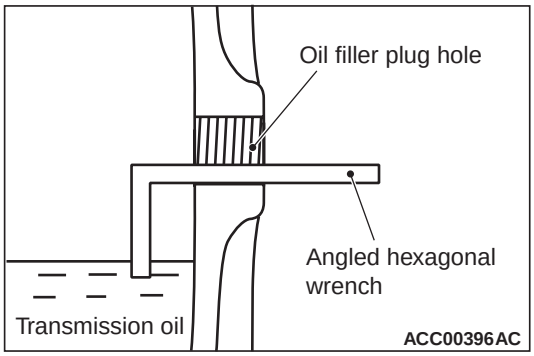

2. Insert an angled hexagonal wrench (4 mm) into the oil filler plug hole as shown.

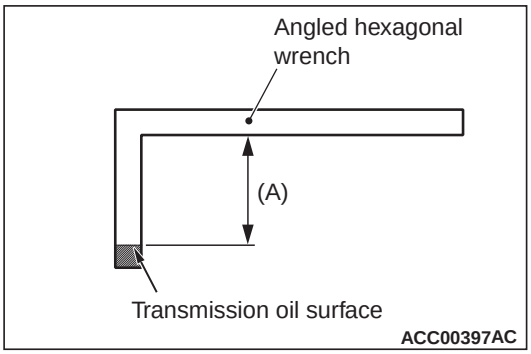

3. Check that the shown dimension (A) meets the following value:
   - <134, 135> 8 mm or less
   - <4G1> 22 mm or less
4. Check that the oil is not noticeably dirty.
5. Tighten the filler plug to the specified torque.

   Tightening torque: 43 ± 3 N·m

<Old>

TRANSMISSION OIL LEVEL CHECK

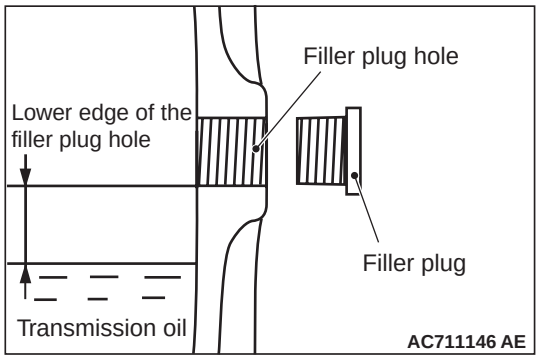

1. Remove the filler plug.
2. Check that the oil level is within approximately 8 mm <F5MGA> or approximately 22 mm <F5MGB> from the lower edge of the oil filler plug hole.
3. Check that the oil is not noticeably dirty.
4. Tighten the filler plug to the specified torque.

   Tightening torque: 43 ± 3 N·m

<New>

TRANSMISSION OIL LEVEL CHECK

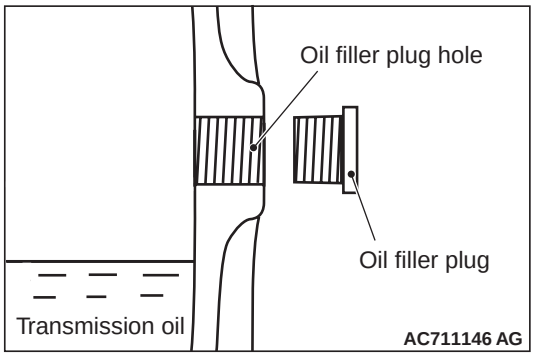

1. Remove the oil filler plug.

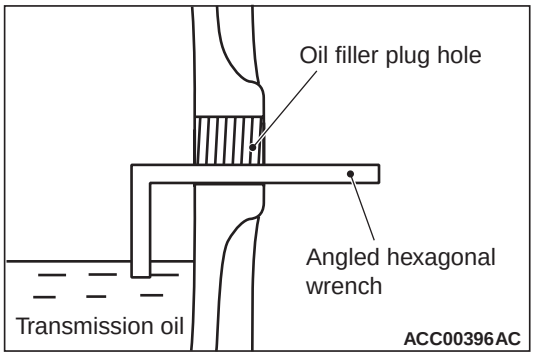

2. Insert an angled hexagonal wrench (4 mm) into the oil filler plug hole as shown.

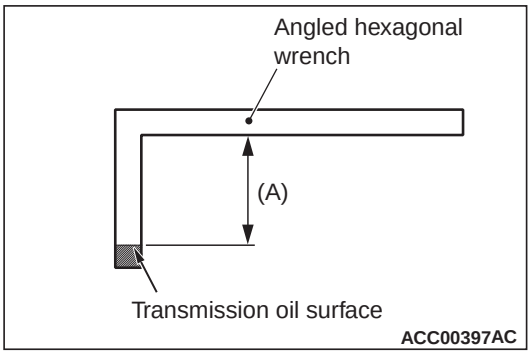

3. Check that the shown dimension (A) meets the following value:
   - <134, 3A9, 135, 4A9> 8 mm or less
   - <4G1> 22 mm or less
4. Check that the oil is not noticeably dirty.
5. Tighten the filler plug to the specified torque.

   Tightening torque: 43 ± 3 N·m

<Old>

TRANSMISSION OIL LEVEL CHECK

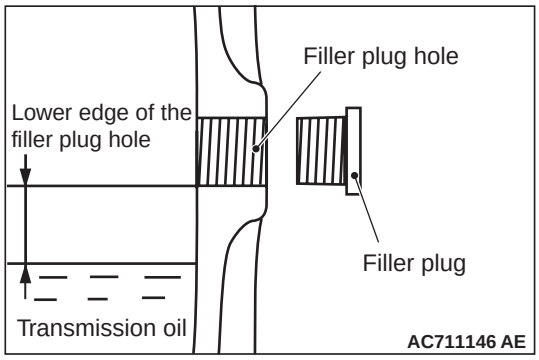

1. Remove the filler plug.
2. Check that the oil level is within approximately 8 mm <F5MGA> or approximately 22 mm <F5MGB> from the lower edge of the oil filler plug hole.
3. Check that the oil is not noticeably dirty.
4. Tighten the filler plug to the specified torque.

   Tightening torque: 43 ± 3 N·m

<New>

TRANSMISSION OIL LEVEL CHECK

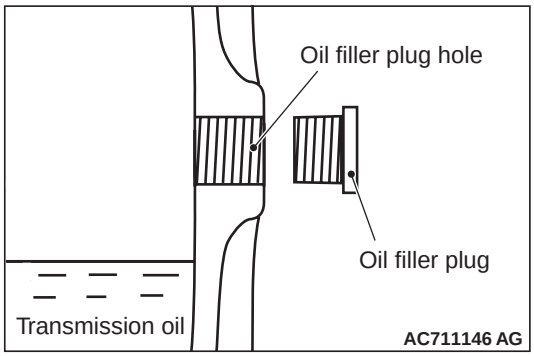

1. Remove the oil filler plug.

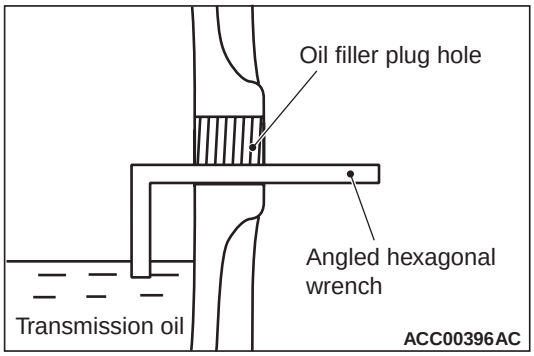

2. Insert an angled hexagonal wrench (4 mm) into the oil filler plug hole as shown.

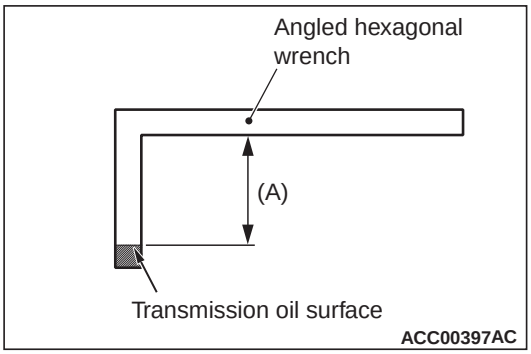

3. Check that the shown dimension (A) meets the following value:
   - 8 mm or less
4. Check that the oil is not noticeably dirty.
5. Tighten the filler plug to the specified torque.

   Tightening torque: 43 ± 3 N·m

<Old>

TRANSMISSION OIL LEVEL CHECK

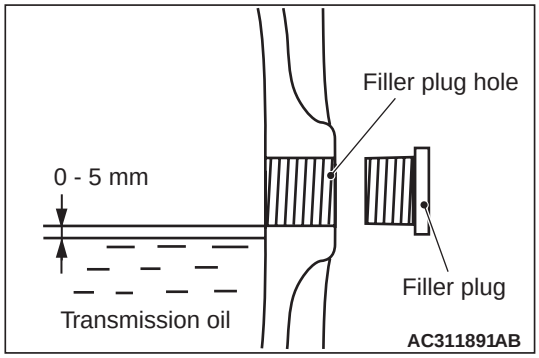

1. Remove the filler plug.
2. Check that the oil level is with in 0 – 5 mm from the lower edge of the filler plug hole.
3. Check that the oil is not noticeably dirty.
4. Tighten the filler plug to the specified torque.

   Tightening torque: 43 ± 3 N·m

<New>

TRANSMISSION OIL LEVEL CHECK

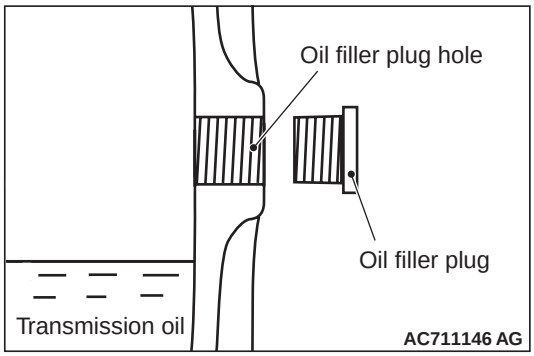

1. Remove the oil filler plug.

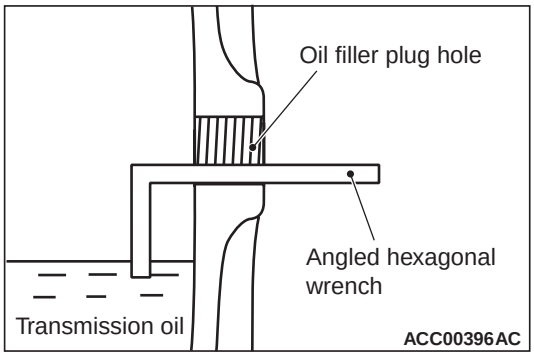

2. Insert an angled hexagonal wrench (4 mm) into the oil filler plug hole as shown.

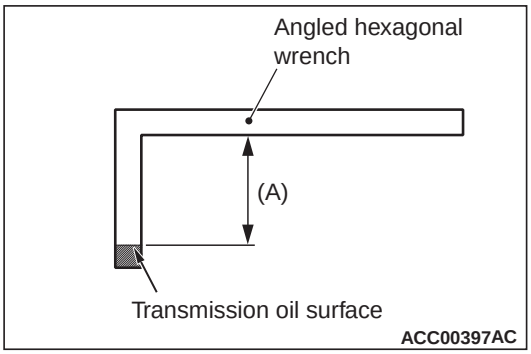

3. Check that the shown dimension (A) meets the following value:
   - <4A9> 8 mm or less
   - <4G1> 22 mm or less
4. Check that the oil is not noticeably dirty.
5. Tighten the filler plug to the specified torque.

   Tightening torque: 43 ± 3 N·m

<Old>

TRANSMISSION OIL LEVEL CHECK

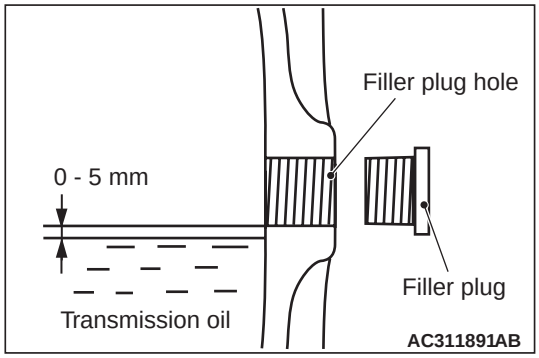

1. Remove the filler plug.
2. Check that the oil level is with in 0 – 5 mm from the lower edge of the filler plug hole.
3. Check that the oil is not noticeably dirty.
4. Tighten the filler plug to the specified torque.

   Tightening torque: 43 ± 3 N·m