# SERVICE BULLETIN

MITSUBISHI MOTORS

GLOBAL AFTER SALES OFFICE, MITSUBISHI MOTORS CORPORATION

| | | |
|---|---|---|
| PURPOSE : CHANGE | ISSUE NO. : MSB-13EXL22-003 | DATE : 2013-10-17 |
| SUBJECT : TRANSMISSION CONTROL REMOVAL AND INSTALLATION | | <Affected Destination/Model> (As per attached) <M/Y> 10-14 |
| GROUP : MANUAL TRANSMISSION(Gr:22) | | KA0T/KB0T/KH8W |

**1. Description :**

Please refer to the attached document for the information about the change of mention in the applicable service manual.(About the change to a liquid gasket and its application point)

**2. Affected service manuals :**

Please refer to the attached document (Attached sheet 1)

**3. About the details :**

Please refer to the attached document (Attached sheet 2-7)

**4. Effective time : From the vehicle produced in Nov, 2009**

**5. Affected EO : EO KM0370**

Attached sheet 1

<CR>

| Destination | Applicable manual | Pub. No. | Applicable title (INFO ID) | Contents |
|---|---|---|---|---|
| EU/RUSSIA | 2010 L200<br>Workshop Manual | CCRE10E1-CD(Eng)<br>CCRS10E1-CD(Spa)<br>CCRF10E1-CD(Fre)<br>CCRG10E1-CD(Ger)<br>CCRI10E1-CD(Ita)<br>RUSSIA:N/A | TRANSMISSION CONTROL REMOVAL AND INSTALLATION<br>(M221-10-220-11600-01) | Attached sheet 2 |
| | 2011 L200<br>Workshop Manual | CCRE11E1-CD(Eng)<br>CCRS11E1-CD(Spa)<br>CCRF11E1-CD(Fre)<br>CCRG11E1-CD(Ger)<br>CCRI11E1-CD(Ita)<br>RUSSIA:N/A | | Attached sheet 3 |
| | 2012 L200<br>Workshop Manual | CCRE12E1-CD (Eng)<br>CCRS12E1-CD (Spa)<br>CCRF12E1-CD (Fra)<br>CCRG12E1-CD (Ger)<br>CCRI12E1-CD (Ita)<br>RUSSIA:N/A | | |
| | 2013 L200<br>Workshop Manual | CKTE13E1-CD (Eng)<br>CKTS13E1-CD (Spa)<br>CKTF13E1-CD (Fra)<br>CKTG13E1-CD (Ger)<br>CKTI13E1-CD (Ita)<br>RUSSIA:N/A | | |
| | 2014 L200<br>Workshop Manual | CKTE14E1-CD (Eng)<br>CKTS14E1-CD (Spa)<br>CKTF14E1-CD (Fra)<br>CKTG14E1-CD (Ger)<br>CKTI14E1-CD (Ita)<br>RUSSIA:N/A | TRANSMISSION CONTROL REMOVAL AND INSTALLATION<br>(M221-10-220-11601-01) | |
| G.EXP/GCC/<br>MEXICO/<br>SOUTH AFRICA | 2010 L200/L200 SPORTERO<br>/TRITON/STRADA/<br>STRADA SPORTERO<br>Workshop Manual | G.EXP/GCC/SOUTH<br>AFRICA<br>PWTE0903R(Eng)<br>PWTS0904R(Spa)<br>MEXICO:DRAFT | TRANSMISSION CONTROL REMOVAL AND INSTALLATION<br>(M221-10-220-14900-01) | Attached sheet 4 |
| | 2011 L200/L200 SPORTERO<br>/TRITON/STRADA/<br>STRADA SPORTERO<br>Workshop Manual | G.EXP/GCC/SOUTH<br>AFRICA<br>PWTE1002R(Eng)<br>PWTS1003R(Spa)<br>MEXICO:DRAFT | | |
| THAI | 2010 TRITON<br>Workshop Manual | DRAFT | TRANSMISSION CONTROL REMOVAL AND INSTALLATION<br>(M221-10-220-03100-01) | Attached sheet 4 |
| MMAL/NZ | 2010 TRITON<br>Workshop Manual | MR936949<br>NZ:DRAFT | TRANSMISSION CONTROL REMOVAL AND INSTALLATION<br>(M221-10-220-18300-01) | Attached sheet 4 |

<CR45>

| Destination | Applicable manual | Pub. No. | Applicable title (INFO ID) | Content |
|---|---|---|---|---|
| G.EXP/GCC/<br>RUSSIA/<br>MMAL/NZ/ | 2011 NATIVA/PAJERO SPORT<br>/MONTERO SPORT<br>Workshop Manual | PWJE1004R(Eng)<br>PWJS1005R(Spa)<br>MMAL:AU900055<br>NZ:DRAFT | TRANSMISSION CONTROL REMOVAL AND INSTALLATION<br>(M221-10-220-19400-01) | Attached sheet 5 |

Attached sheet 2 (1/2)

# REMOVAL AND INSTALLATION

## <2WD>

| Pre-removal Operation | Post-installation Operation |
|---|---|
| Move the transmission control lever to the Neutral position. | Check that the transmission control lever is moved to each position smoothly and correctly. |

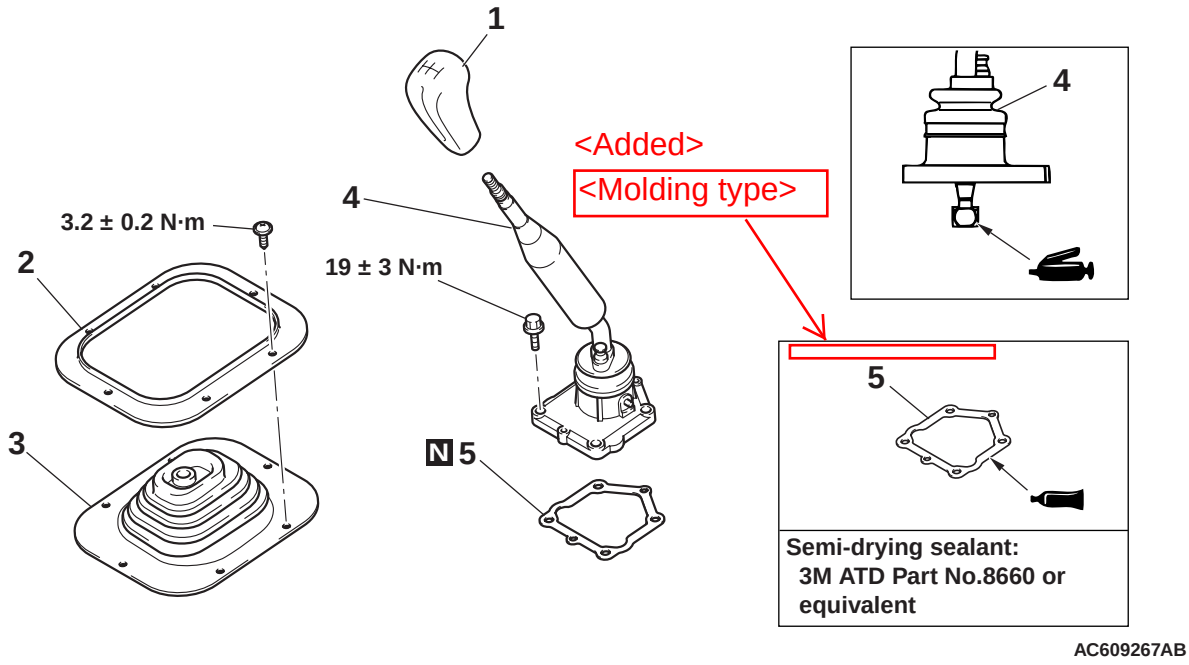


AC609267AB

**Removal steps**

1. Shift knob
- Front floor console assembly (Refer to GROUP 52A, Floor Console Assembly.)

**Removal steps**

2. Dust cover retaining plate
3. Dust cover
4. Transmission control lever assembly
5. Gasket

<Added> >>B<<

<Added> <Molding type>

Attached sheet 2 (2/2)

## INSTALLATION SERVICE POINT

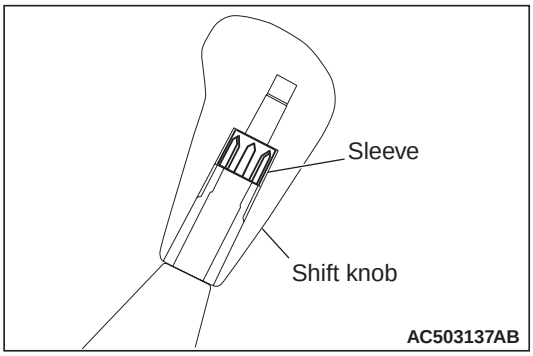


>>A<< SLEEVE INSTALLATION

Install the sleeve with its groove facing to the direction shown in the figure, and then install the shift knob.

Insert the attached sheet 6

Attached sheet 3 (1/2)

## REMOVAL AND INSTALLATION

### <2WD>

| Pre-removal Operation | Post-installation Operation |
|---|---|
| Move the transmission control lever to the Neutral position. | Check that the transmission control lever is moved to each position smoothly and correctly. |

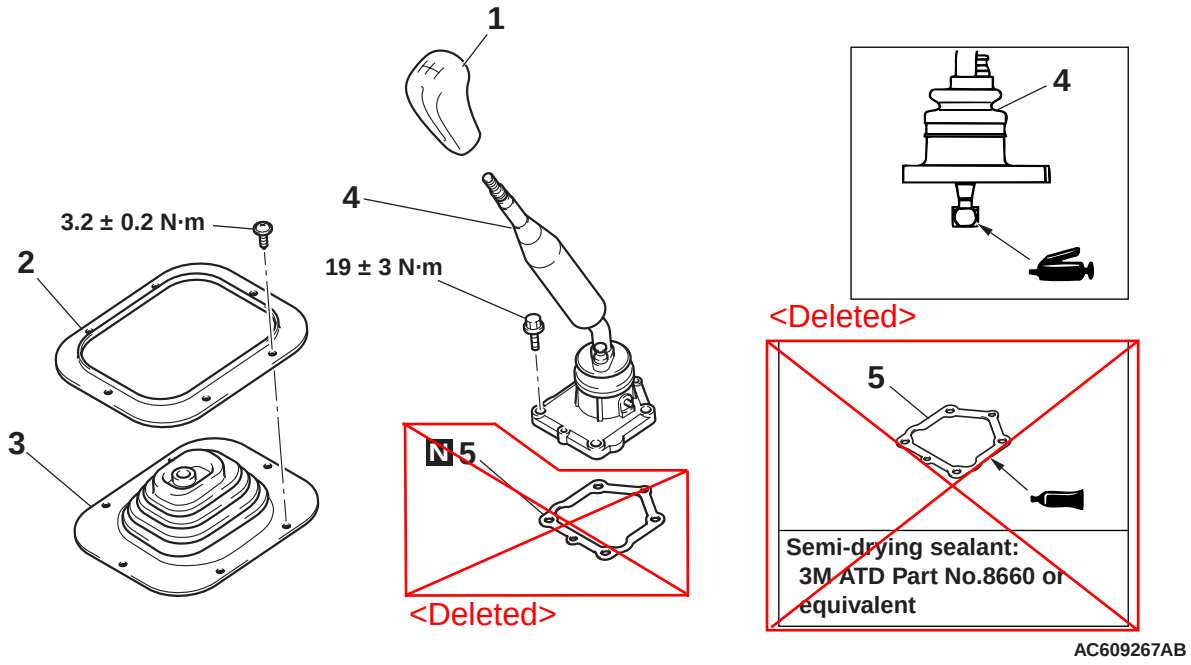


**Removal steps**

1. Shift knob
- Front floor console assembly (Refer to GROUP 52A, Floor Console Assembly.)

**Removal steps**

2. Dust cover retaining plate
3. Dust cover
4. Transmission control lever assembly
5. ~~Gasket~~ <Deleted>

>>B<< <Added>

Attached sheet 3 (2/2)

## INSTALLATION SERVICE POINT

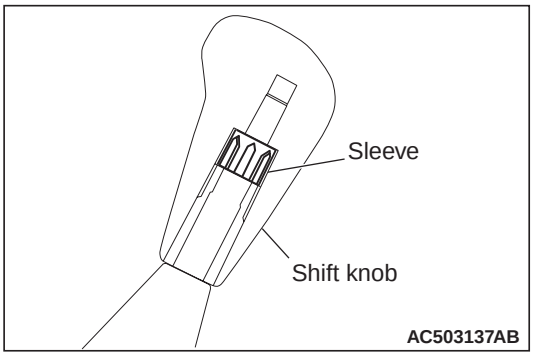


>>A<< SLEEVE INSTALLATION

Install the sleeve with its groove facing to the direction shown in the figure, and then install the shift knob.

Insert the attached sheet 7

Attached sheet 4 (1/2)

## REMOVAL AND INSTALLATION

### <2WD>

| Pre-removal Operation | Post-installation Operation |
|---|---|
| Move the transmission control lever to the Neutral position. | Check that the transmission control lever is moved to each position smoothly and correctly. |

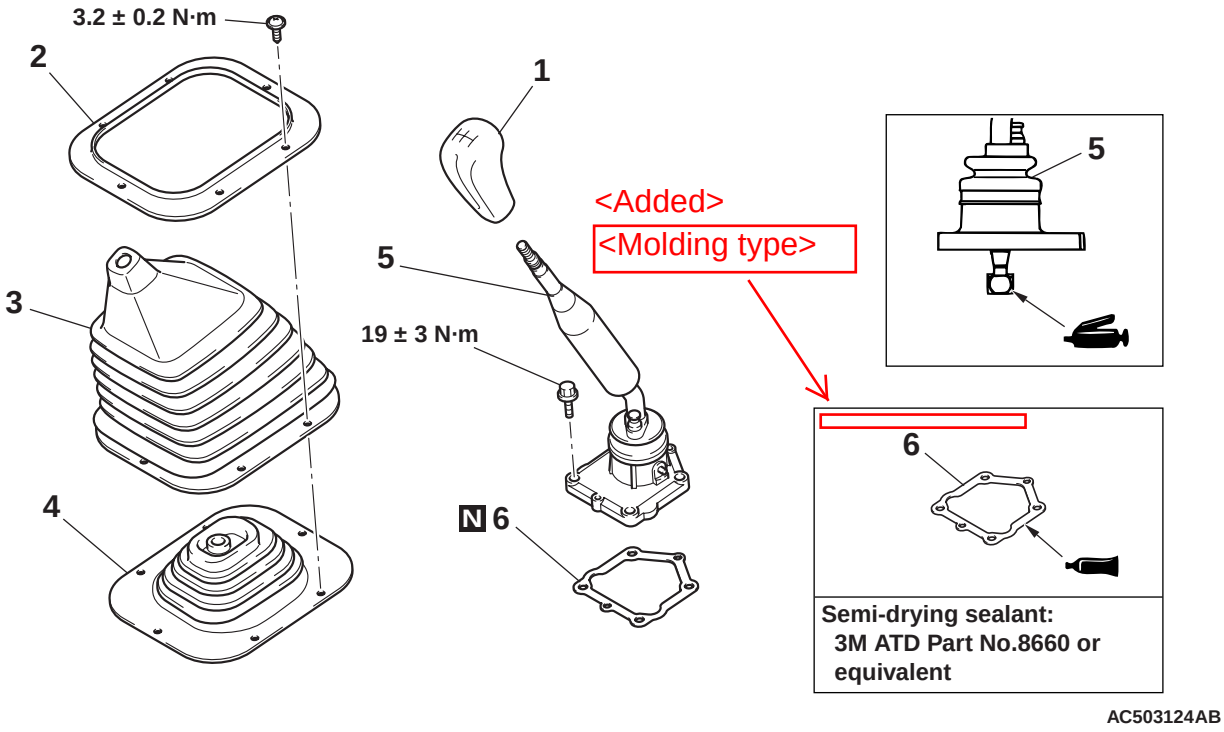


AC503124AB

**Removal steps**

1. Shift knob
- Front floor console assembly <Vehicles with front floor consol assembly> (Refer to GROUP 52A – Floor Consol Assembly.)
2. Dust cover retaining plate
3. Control lever cover <Vehicles without front floor consol assembly>
4. Dust cover
5. Transmission control lever assembly
6. Gasket

<Added> >>B<<

<Added> <Molding type>

Attached sheet 4 (2/2)

## INSTALLATION SERVICE POINT

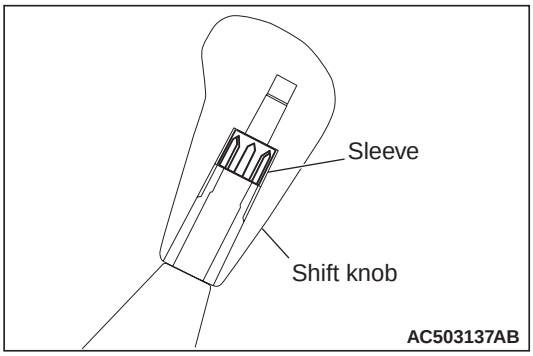


>>A<< SLEEVE INSTALLATION

Install the sleeve with its groove facing to the direction shown in the figure, and then install the shift knob.

Insert the attached sheet 6

Attached sheet 5 (1/2)

## REMOVAL AND INSTALLATION

### <R5MB1>

| Pre-removal Operation | Post-installation Operation |
|---|---|
| Move the transmission control lever to the Neutral position. | Check that the transmission control lever is moved to each position smoothly and correctly. |

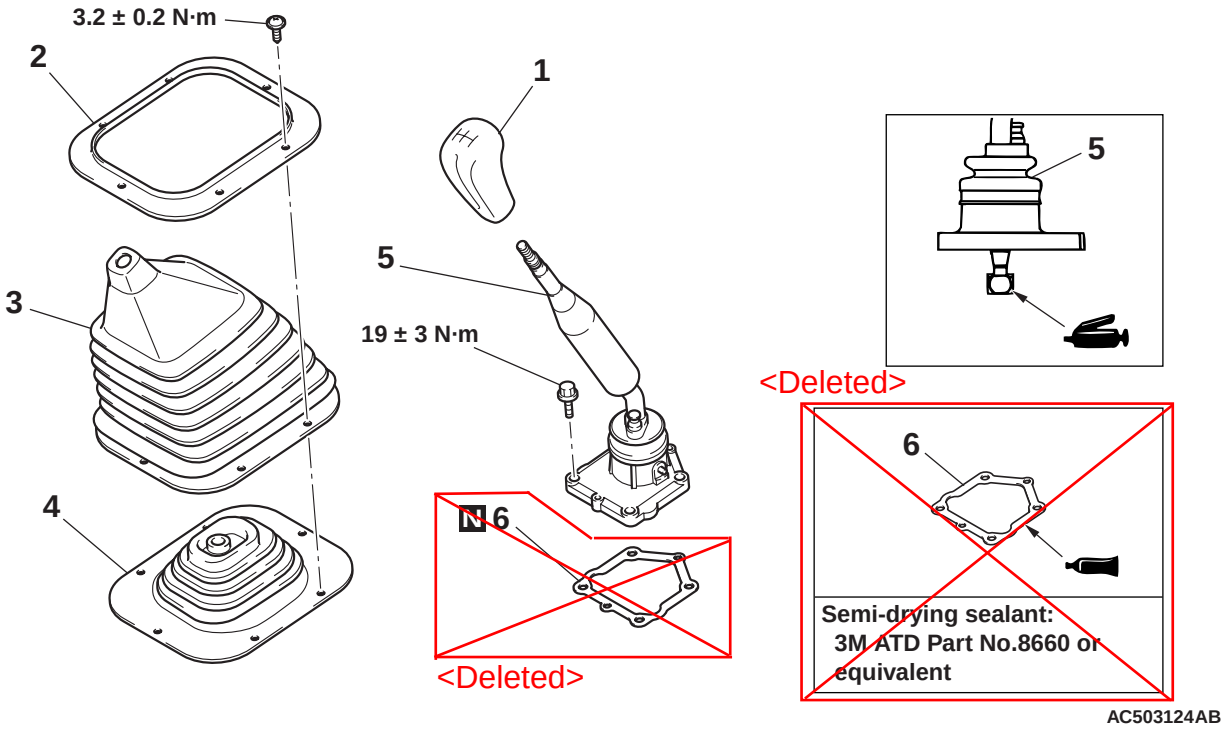


**Removal steps**

1. Shift knob
- Front floor console assembly <Vehicles with front floor consol assembly> (Refer to GROUP 52A – Floor Console Assembly.)
2. Dust cover retaining plate

**Removal steps**

3. Control lever cover <Vehicles without front floor consol assembly>
4. Dust cover
5. Transmission control lever assembly
6. ~~Gasket~~

<Deleted>

<Added> >>B<<

Attached sheet 5 (2/2)

## <V5MB1>

| Pre-removal Operation | Post-installation Operation |
|---|---|
| Move the transmission control lever and transfer control lever to the following positions.<br>• Transmission control lever: Neutral<br>• Transfer control lever: 4H | Check that the transmission control lever and the transfer control lever are moved to each position smoothly and correctly. |

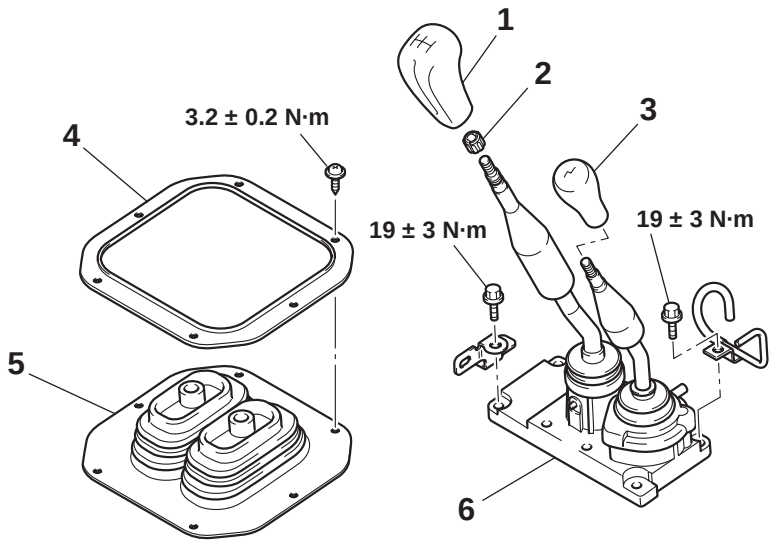


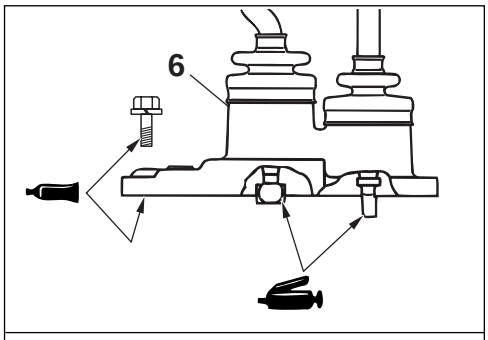


**Semi-drying sealant:**
**3M ATD Part No.8660 or equivalent**

AC503125AB

**Removal steps**
1. Shift knob
>>A<< 2. Sleeve
3. Transfer shift lever knob
- Front floor console assembly (Refer to GROUP 52A – Floor Consol Assembly.)

**Removal steps**
4. Dust cover retaining plate
5. Dust cover
6. Transmission control lever assembly and transfer control lever assembly

## INSTALLATION SERVICE POINT

### >>A<< SLEEVE INSTALLATION

Install the sleeve with its groove facing to the direction shown in the figure, and then install the shift knob.

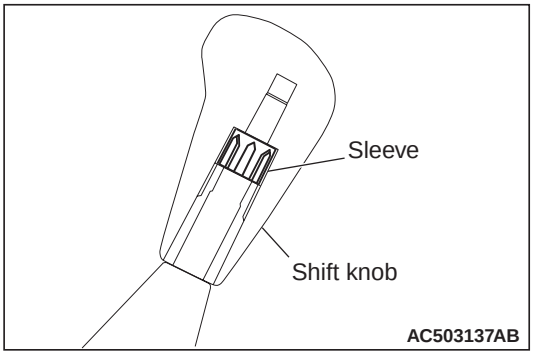


Insert the attached sheet 7

Attached sheet 6

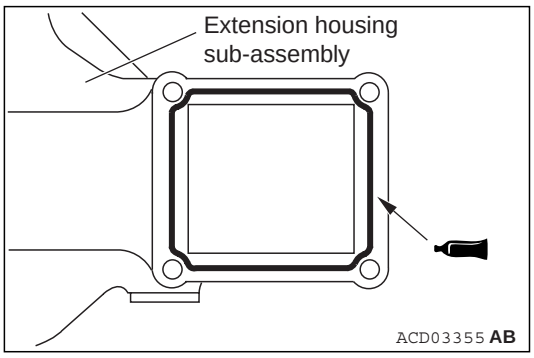


**>>B<< TRANSMISSION CONTROL LEVER ASSEMBLY INSTALLATION <Except molding type>**

1. Completely degrease the FIPG-applied surface so that water and oil including the old sealant cannot adhere to the surface coated with the sealant.
   Never touch the degreased surface by hand.
2. Apply a 1.2 mm diameter bead of liquid gasket to the intermediate plate mounting surface of the extension housing sub-assembly.
   **Special sealant: MITSUBISHI MOTORS GENUINE Part No. MD974421 or equivalent**

Attached sheet 7

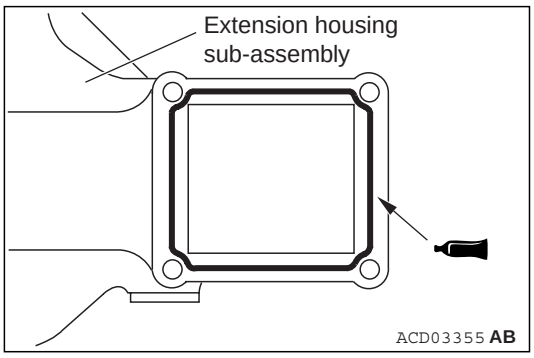


**>>B<< TRANSMISSION CONTROL LEVER ASSEMBLY INSTALLATION**

1. Completely degrease the FIPG-applied surface so that water and oil including the old sealant cannot adhere to the surface coated with the sealant.
   Never touch the degreased surface by hand.
2. Apply a 1.2 mm diameter bead of liquid gasket to the intermediate plate mounting surface of the extension housing sub-assembly.
   **Special sealant: MITSUBISHI MOTORS GENUINE Part No. MD974421 or equivalent**