SERVICE BULLETIN

MITSUBISHI MOTORS

GLOBAL AFTER SALES OFFICE, MITSUBISHI MOTORS CORPORATION

PURPOSE : INFORMATION	ISSUE NO. : MSB-13EXM42-001	DATE : 2013-03-21
SUBJECT : FENDER COLLAR		<Destination/Model> (AS SHOWN BELOW) <M/Y> 11/13
GROUP : BODY		OUTLANDER SPORT/RVR/ASX(GA0W)

1. Description :

See the attached document for the information about the change of mention in the applicable service manual.

2. Applicable service manual :

Destination	Applicable manual	Pub. No	Applicable title (INFO ID)	Attached sheet
MMNA	2013 OUTLANDER SPORT / RVR Service Manual	MSCD-017B-2013	FENDER REMOVAL AND INSTALLATION (M421-00-191-53200-01)	Attached sheet 1
EU/ RUSSIA	2013 ASX Workshop Manual	CGWE13E2-CD (Eng) CGWS13E2-CD (Spa) CGWF13E2-CD (Fre) CGWG13E2-CD (Ger) CGWI13E2-CD (Ita) RUSSIA:N/A	FENDER REMOVAL AND INSTALLATION (M421-00-191-53200-01)	Attached sheet 2
EXP/GCC	2011 ASX / OUTLANDER SPORT Workshop Manual	PWPS1006R (Eng) PWPS1007R (Spa)	FENDER REMOVAL AND INSTALLATION (M421-00-191-53200-01)	

3. Details :

See the attached document

※Please refer to ND1592/PD2953

REMOVAL AND INSTALLATION

Pre-removal and post-installation operation
- Front wheelhouse splash shield removal and installation (Refer to .)
- Front bumper assembly removal and installation (Refer to GROUP 51 – Front Bumper Assembly .)
- Headlight assembly removal and installation (Refer to GROUP 54A – Headlight .)
- Side turn-signal light removal and installation (Refer to GROUP 54A – Side turn-signal light .)
- Front deck garnish removal and installation (Refer to GROUP 51 – Windshield Wiper .)
- Side air dam removal and installation (Refer to GROUP 51 – Side Air Dams .)

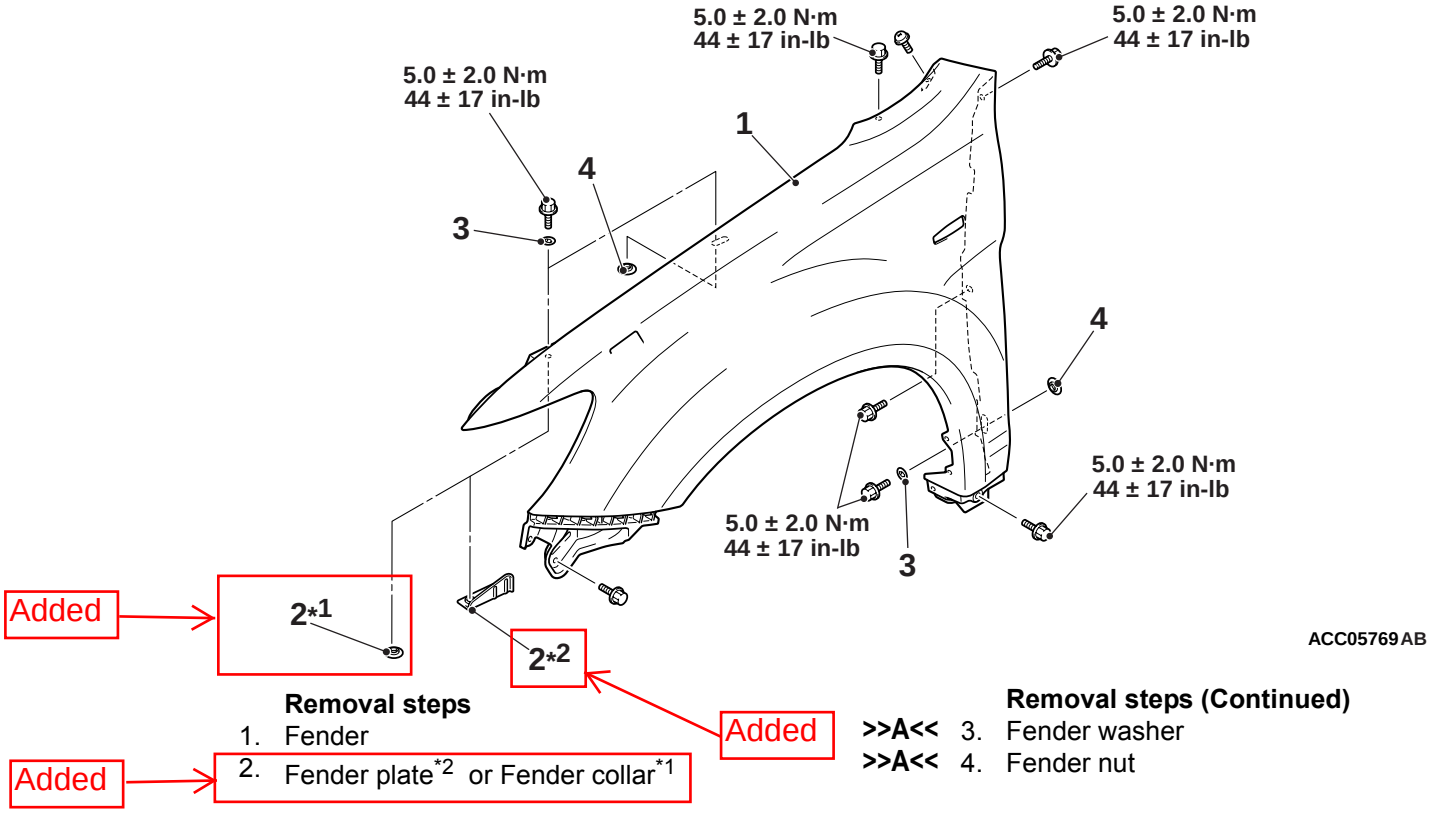

Removal steps
1. Fender
2. Fender plate*2 or Fender collar*1

Removal steps (Continued)
>>A<< 3. Fender washer
>>A<< 4. Fender nut

INSTALLATION SERVICE POINT

>>A<< FENDER NUT/ FENDER WASHER INSTALLATION
1. Fit the fender nut to the fender.
2. Fit the fender washer to the fender and fender plate.
3. Install the bolts.

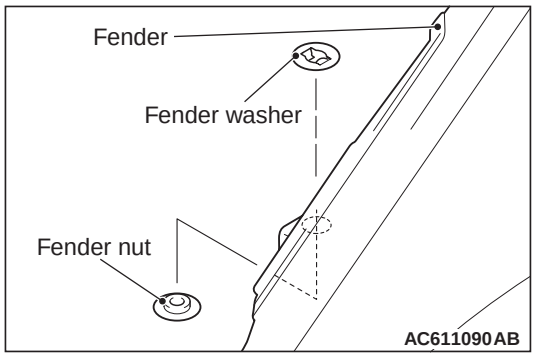

REMOVAL AND INSTALLATION

Pre-removal and post-installation operation
- Front wheelhouse splash shield removal and installation (Refer to .)
- Front bumper assembly removal and installation (Refer to GROUP 51 – Front Bumper Assembly .)
- Headlamp assembly removal and installation (Refer to GROUP 54A – Headlamp .)
- Side turn-signal lamp removal and installation (Refer to GROUP 54A – Side turn-signal lamp .)
- Front deck garnish removal and installation (Refer to GROUP 51 – Windshield Wiper .)
- Side air dam removal and installation (Refer to GROUP 51 – Side Air Dams .)

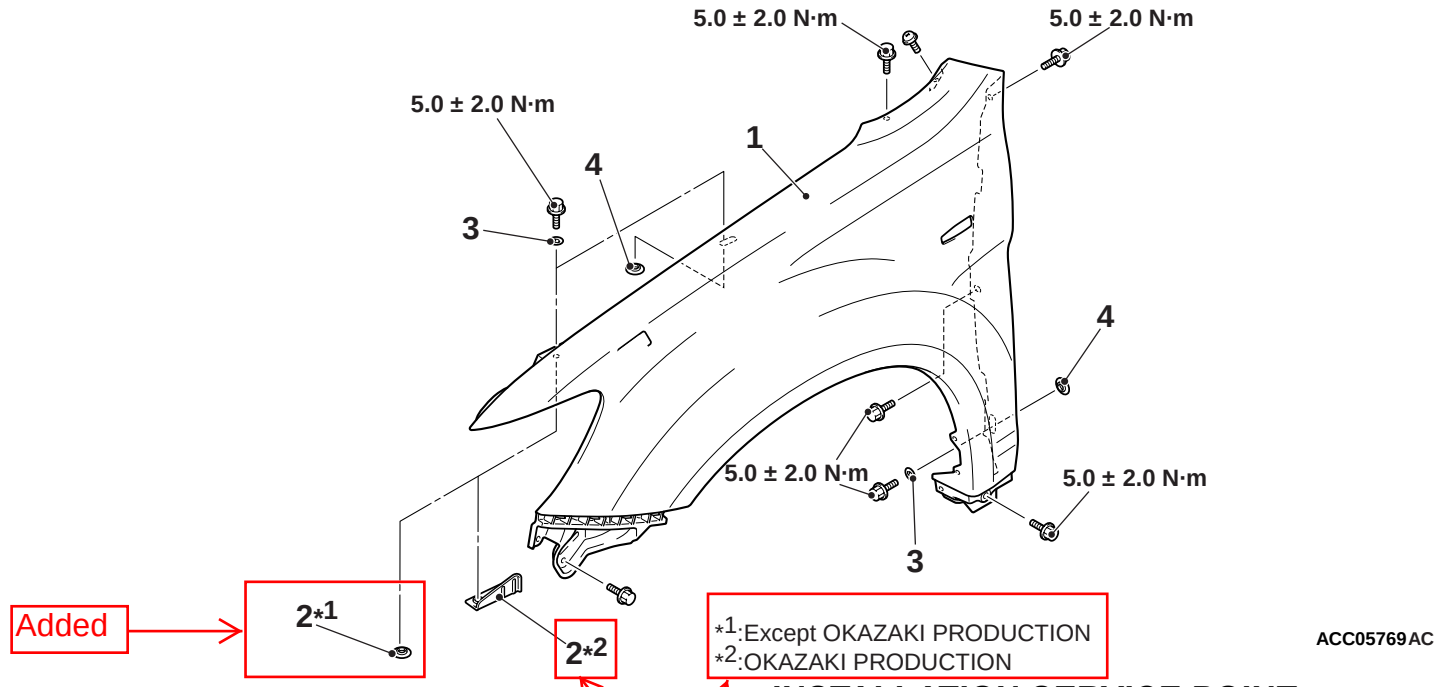

Removal steps
1. Fender
2. Fender plate*2 or Fender collar*1 (Added)
3. >>A<< Fender washer
4. >>A<< Fender nut

INSTALLATION SERVICE POINT

>>A<< FENDER NUT/ FENDER WASHER INSTALLATION

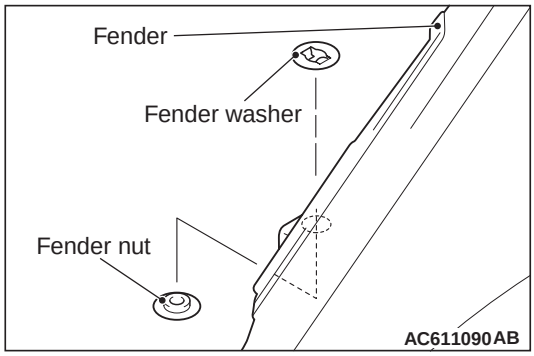

1. Fit the fender nut to the fender.
2. Fit the fender washer to the fender and fender plate.
3. Install the bolts.