SERVICE BULLETIN

MITSUBISHI MOTORS

GLOBAL AFTER SALES OFFICE, MITSUBISHI MOTORS CORPORATION

PURPOSE : INFORMATION	ISSUE NO. : MSB-13EXML00-001B	DATE : 2013-05-15
SUBJECT : REMOVAL AND INSTALLATION OF A STABILIZER LINK		<Destination/Model> AS SHOWN BELOW / <M/Y> ALL
GROUP : GENERAL		

1. Description :

See the attached document for the information about the change of mention in the applicable service manual.

2. Applicable destinations and models

For MMNA/USTP : CY0A/CX0A/GA0W/CZ4A/CW0W (Please see the attached 2)

For EUR/PEUGEOT/CITROEN : CY0A/CX0A/GA0W/CZ4A/CW0W/GF0W/GB0W/GC0W
For G.EXP : CY0A/GA0W/CZ4A/CW0W/CV0W
For GCC : CY0A/GA0W/CZ4A/CW0W
For MMAL:CY0A/CX0A/GA0W/CZ4A/CW0W/GF0W (Please see the attached 3 except for MMNA /USTP)

3. Details :

See the attached document

STABILIZER BAR

REMOVAL AND INSTALLATION

M1332001901045

Post-installation Operation
- Check the Dust Cover for Cracks or Damage by Pushing it with your finger.
- Front Wheel Alignment Check and Adjustment (Refer to).

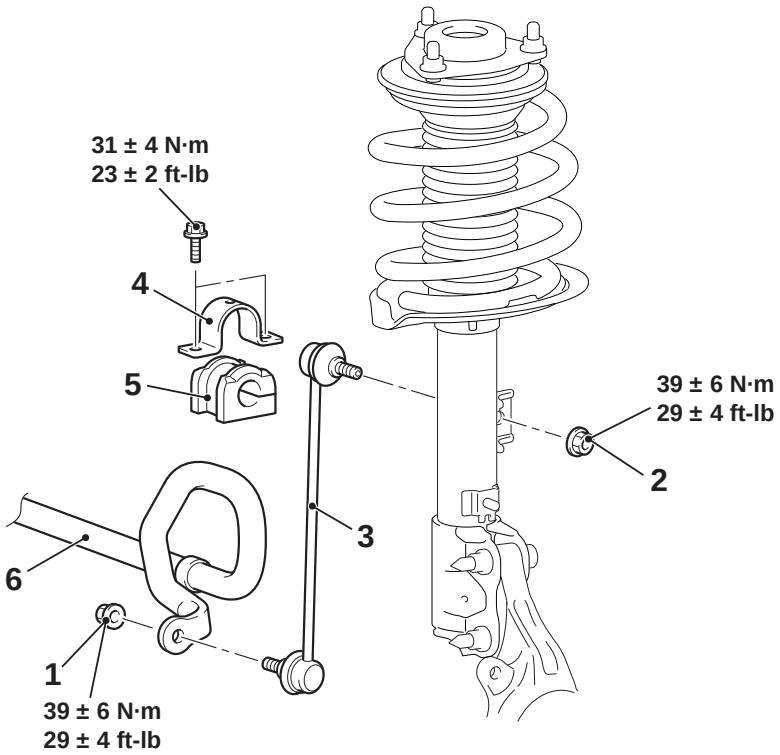

ACC00332AB

＜Added＞

Stabilizer link removal steps

<<A>>	>>C<<	1.	Stabilizer link and stabilizer bar connection nut
<<B>>	>>D<<	2.	Stabilizer link and strut connection nut
		3.	Stabilizer link

Stabilizer bushing removal steps

<<A>>	>>C<<	1.	Stabilizer link and stabilizer bar connection nut

Stabilizer bushing removal steps (Continued)

		4.	Stabilizer bar bracket
	>>B<<	5.	Stabilizer bushing

Stabilizer bar removal steps

<<A>>	>>C<<	1.	Stabilizer link and stabilizer bar connection nut
		4.	Stabilizer bar bracket
	>>B<<	5.	Stabilizer bushing
	>>A<<	6.	Stabilizer bar

＜Added＞

< Correct >

B hexagon wrench

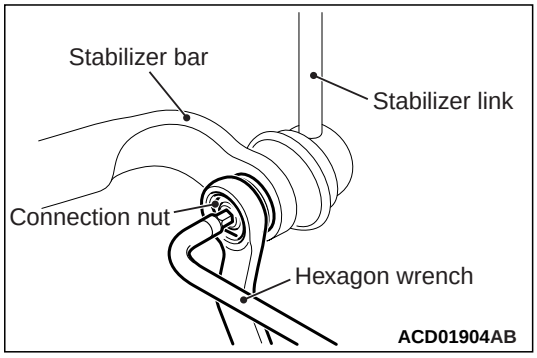

REMOVAL SERVICE POINT

<<A>> STABILIZER LINK AND STABILIZER BAR CONNECTION NUT REMOVAL < Incorrect >

Use a ~~wrench~~ to counterhold the stabilizer link as shown. Then use a ~~hexagon wrench~~ to remove the nut securing the stabilizer link to the stabilizer bar. < Incorrect >

B wrench

< Correct >

< Correct >

B hexagon wrench

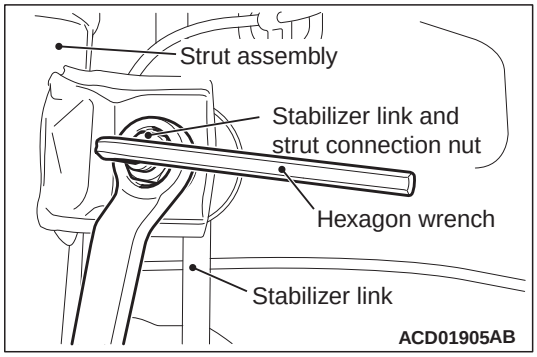

<<B>> STABILIZER LINK AND STRUT CONNECTION NUT REMOVAL < Incorrect >

Use a ~~wrench~~ to counterhold the stabilizer link as shown. Then use a ~~hexagon wrench~~ to remove the nut securing the stabilizer link to the strut. < Incorrect >

B wrench

< Correct >

INSTALLATION SERVICE POINTS

>>A<< STABILIZER BAR INSTALLATION

Install the stabilizer bar as shown in the figure.

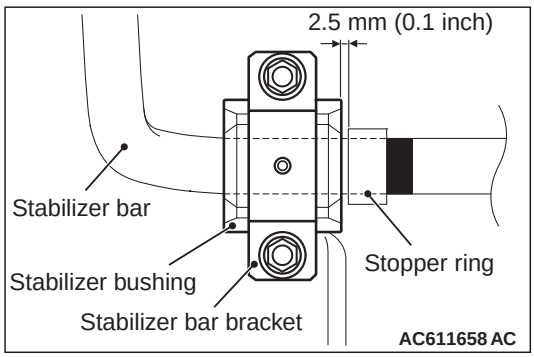

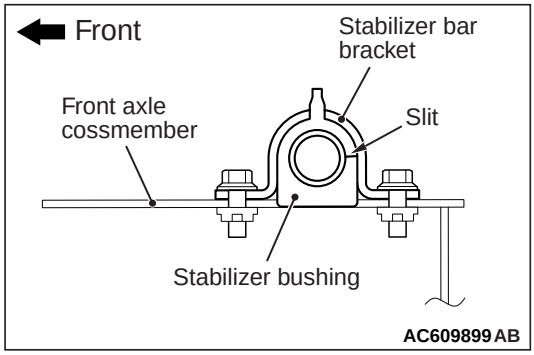

>>B<< STABILIZER BUSHING INSTALLATION
Install the stabilizer bushing as shown in the figure.

<Added>

B < Correct > hexagon wrench

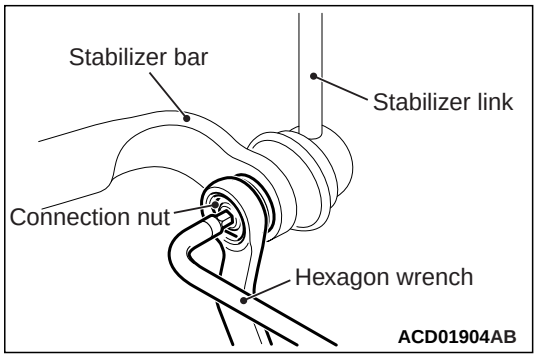

>>C<< STABILIZER LINK AND STABILIZER BAR CONNECTION NUT INSTALLATION < Incorrect >
Use a ~~wrench~~ to counterhold the stabilizer link as shown. Then use a ~~hexagon wrench~~ to install the nut securing the stabilizer link to the stabilizer bar. < Incorrect >

B wrench < Correct >

B < Correct > hexagon wrench

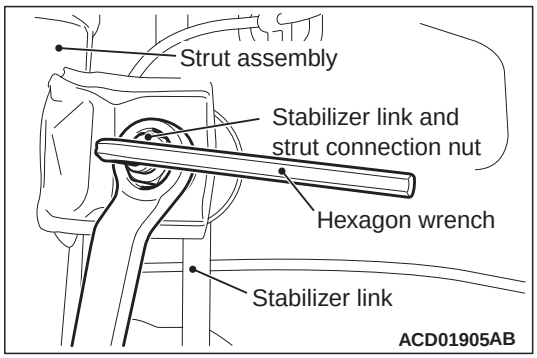

>>D<< STABILIZER LINK AND STRUT CONNECTION NUT INSTALLATION < Incorrect >
Use a ~~wrench~~ to counterhold the stabilizer link as shown. Then use a ~~hexagon wrench~~ to install the nut securing the stabilizer link to the strut. < Incorrect >

B wrench

STABILIZER BAR

REMOVAL AND INSTALLATION

M1332001901034

Post-installation Operation
- Check the Dust Cover for Cracks or Damage by Pushing it with your finger.
- Front Wheel Alignment Check and Adjustment (Refer to).

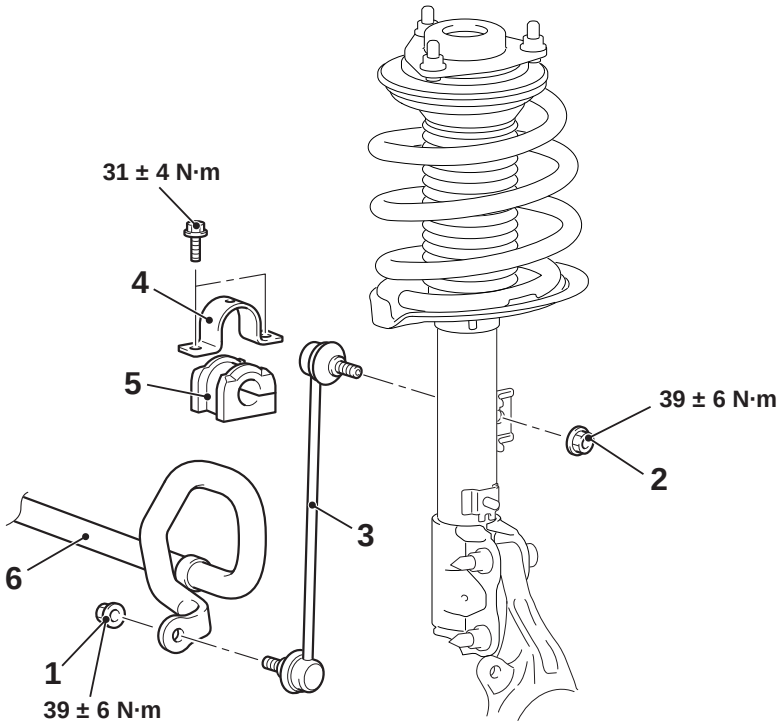

ACC00332AB

＜Added＞

			Stabilizer link removal steps
<<A>>	>>C<<	1.	Stabilizer link and stabilizer bar connection nut
<<B>>	>>D<<	2.	Stabilizer link and strut connection nut
		3.	Stabilizer link
			Stabilizer bushing removal steps
<<A>>	>>C<<	1.	Stabilizer link and stabilizer bar connection nut
		4.	Stabilizer bar bracket
	>>B<<	5.	Stabilizer bushing
			Stabilizer bar removal steps
<<A>>	>>C<<	1.	Stabilizer link and stabilizer bar connection nut
		4.	Stabilizer bar bracket
	>>B<<	5.	Stabilizer bushing
	>>A<<	6.	Stabilizer bar

REMOVAL SERVICE POINT ＜Added＞

<<A>> STABILIZER LINK AND STABILIZER BAR CONNECTION NUT REMOVAL

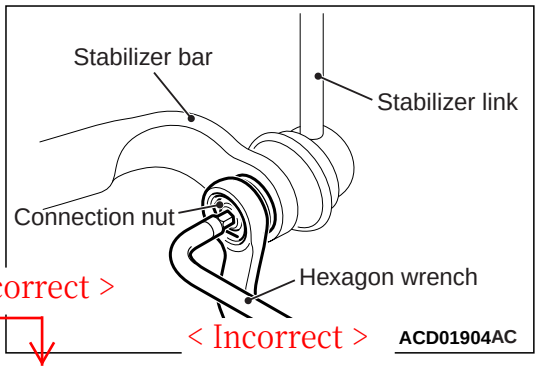

< Incorrect >

< Incorrect >

Use a ~~wrench~~ to counterhold the stabilizer link as shown. Then use a ~~hexagon wrench~~ to remove the nut securing the stabilizer link to the stabilizer bar.

B hexagon wrench

< Correct >

B wrench

< Correct >

<Added>

<<B>> STABILIZER LINK AND STRUT CONNECTION NUT REMOVAL

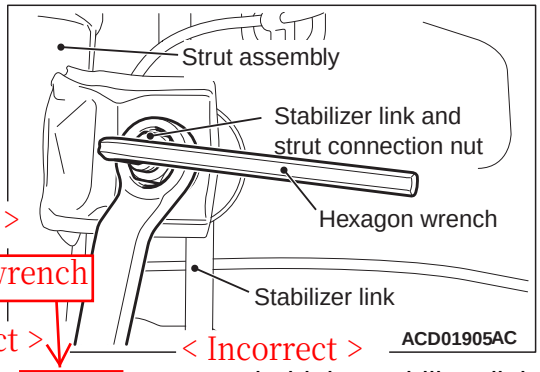

B
< Correct >
hexagon wrench
< Incorrect >
< Incorrect >

Use a ~~wrench~~ to counterhold the stabilizer link as shown. Then use a ~~hexagon wrench~~ to remove the nut securing the stabilizer link to the strut.

INSTALLATION SERVICE POINTS

>>A<< STABILIZER BAR INSTALLATION

wrench
< Correct >
B

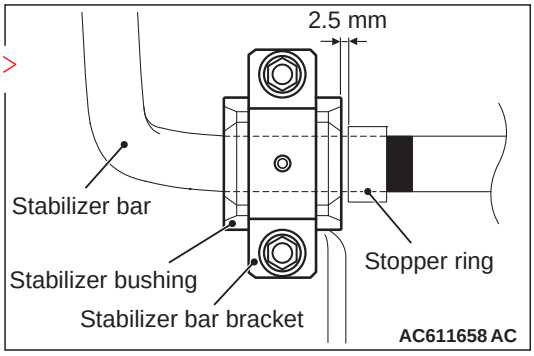

Install the stabilizer bar as shown in the figure.

>>B<< STABILIZER BUSHING INSTALLATION

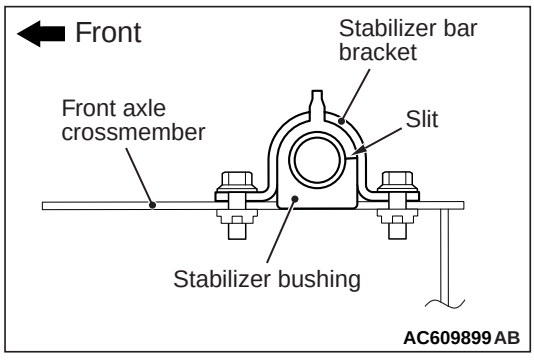

Install the stabilizer bushing as shown in the figure.

<Added>

>>C<< STABILIZER LINK AND STABILIZER BAR CONNECTION NUT INSTALLATION

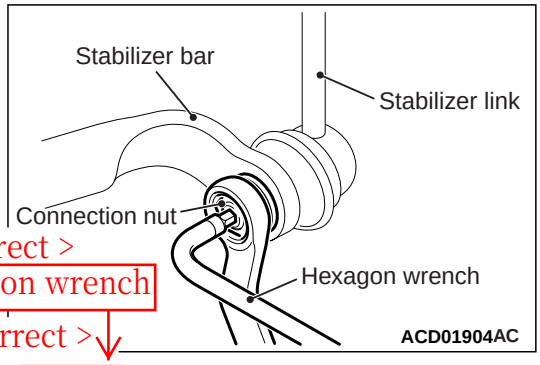

B
< Correct >
hexagon wrench
< Incorrect >

Use a ~~wrench~~ to counterhold the stabilizer link as shown. Then use a ~~hexagon wrench~~ to install the nut securing the stabilizer link to the stabilizer bar.

< Incorrect >
B wrench
< Correct >

>>D<< STABILIZER LINK AND STRUT CONNECTION NUT INSTALLATION

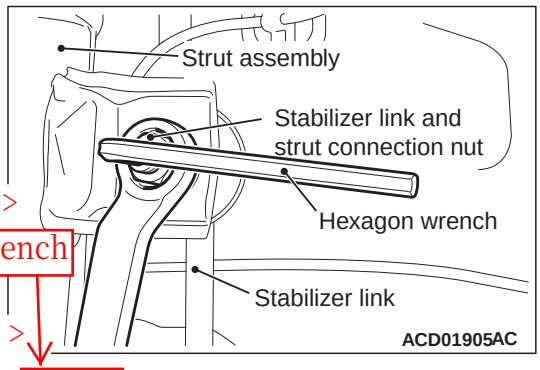

B
< Correct >
hexagon wrench
< Incorrect >

Use a ~~wrench~~ to counterhold the stabilizer link as shown. Then use a ~~hexagon wrench~~ to install the nut securing the stabilizer link to the strut.

INSPECTION

< Incorrect >
B wrench < Correct >

M1332002000967

- Check the bushings for wear and deterioration.
- Check the stabilizer bar for deterioration or damage.
- Check all bolts for condition and straightness.

STABILIZER LINK BALL JOINT ROTATION STARTING TORQUE CHECK

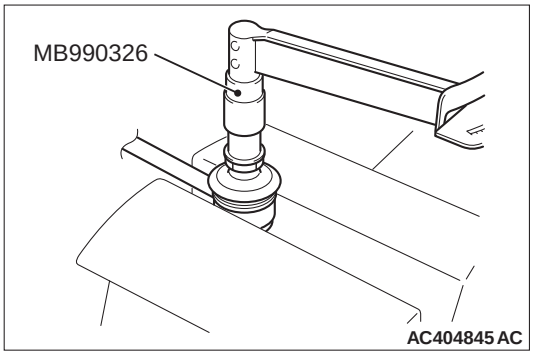

1. Move the stabilizer link ball joint stud back and forth for several times, install the stud with nut, and measure the stabilizer link ball joint rotation starting torque using special tool preload socket (MB990326).

   Standard value: 0.3 – 2.9 N·m

2. When the measured value exceeds the standard range, replace the stabilizer link (Refer to).

3. When the measured value stays within the standard range, if there is any looseness or gritty feeling, it is judged as unusable and replaced.

STABILIZER LINK BALL JOINT DUST COVER CHECK
(Refer to)