SERVICE BULLETIN

MITSUBISHI MOTORS

GLOBAL AFTER SALES OFFICE, MITSUBISHI MOTORS CORPORATION

PURPOSE : INFORMATION	ISSUE NO. : MSB-13EXML11-004	DATE : 2013-06-13
SUBJECT : CHANGE OF THE BEARING CAP BOLT FOR 6B31		<Destination/Model> (AS PER ATTACHED) <M/Y> 07-14
GROUP : ENGINE(Gr.11)		OUTLANDER(CW0W/GF0W) PAJERO SPORT/NATIVA/MONTERO SPORT/CHALLENGER(KH8W)

1. Description :

See the attached document for the information about the change of mention in the applicable service manual. **(For productivity improvement, the bearing cap bolt for 6B31 engine is changed to the flange bolt from the bolt with washer)**

2. Applicable service manual :

See the attached document

3. Details :

See the attached document

※ Time for enforcement : From the vehicle produced in the end of July, 2012.

※ The related EO number : NT0632

MMNA

Applicable manual	Pub. No.	Applicable title (INFO ID)	Contents
2007 OUTLANDER Service Manual	MSCD-007B-2007	Gr11B: FASTENER TIGHTENING SPECIFICATIONS (M113-02-342-73600-01)	Attached sheet 3 (1/7)
		Gr11B: OIL PAN AND OIL PUMP (M113-00-812-14701-01)	Attached sheet 3 (2/7, 3/7, 4/7)
		Gr11B: CRANKSHAFT AND CYLINDER BLOCK (M113-00-872-60000-01)	Attached sheet 3 (5/7)
2008 OUTLANDER Service Manual	MSCD-007B-2008	Gr11D: FASTENER TIGHTENING SPECIFICATIONS (M113-02-342-73600-01)	Attached sheet 3 (1/7)
		Gr11D: OIL PAN AND OIL PUMP (M113-00-812-14701-01)	Attached sheet 3 (2/7, 3/7, 4/7)
		Gr11D: CRANKSHAFT AND CYLINDER BLOCK (M113-00-872-60000-01)	Attached sheet 3 (5/7)
2009 OUTLANDER Service Manual	MSCD-007B-2009	Gr11D: FASTENER TIGHTENING SPECIFICATIONS (M113-02-343-48300-01)	Attached sheet 3 (1/7)
		Gr11D: OIL PAN AND OIL PUMP (M113-00-811-86501-01)	Attached sheet 3 (2/7, 3/7, 4/7)
		Gr11D: CRANKSHAFT AND CYLINDER BLOCK (M113-00-873-28300-01)	Attached sheet 3 (5/7)
2010 OUTLANDER Service Manual	MSCD-007B-2010	Gr11D: FASTENER TIGHTENING SPECIFICATIONS (M113-02-344-26001-01)	Attached sheet 3 (1/7)
		Gr11D: OIL PAN AND OIL PUMP (M113-00-812-14701-01)	Attached sheet 3 (2/7, 3/7, 4/7)
		Gr11D: CRANKSHAFT AND CYLINDER BLOCK (M113-00-873-74400-01)	Attached sheet 3 (5/7)
2011 OUTLANDER Service Manual	MSCD-007B-2011	Gr11D: FASTENER TIGHTENING SPECIFICATIONS (M113-02-344-26001-01)	Attached sheet 3 (1/7)
		Gr11D: OIL PAN AND OIL PUMP (M113-00-812-14701-01)	Attached sheet 3 (2/7, 3/7, 4/7)
		Gr11D: CRANKSHAFT AND CYLINDER BLOCK (M113-00-873-74400-01)	Attached sheet 3 (5/7)
2012 OUTLANDER Service Manual	MSCD-007B-2012	Gr11D: FASTENER TIGHTENING SPECIFICATIONS (M113-02-344-26001-01)	Attached sheet 3 (1/7)
		Gr11D: OIL PAN AND OIL PUMP (M113-00-812-14701-01)	Attached sheet 3 (2/7, 3/7, 4/7)
		Gr11D: CRANKSHAFT AND CYLINDER BLOCK (M113-00-873-74400-01)	Attached sheet 3 (5/7)
2014 OUTLANDER Service Manual	MSCD-007B-2014	Gr11D: OIL PAN AND OIL PUMP (M113-00-812-28800-01)	Attached sheet 3 (6/7)
		Gr11D: CRANKSHAFT AND CYLINDER BLOCK (M113-00-874-55400-01)	Attached sheet 3 (7/7)

EU/RUSSIA

Applicable manual	Pub. No.	Applicable title (INFO ID)	Contents
2007 OUTLANDER Workshop Manual	N/A (Russia) CGXE07E1-CD (ENGLISH) CGXS07E1-CD (SPANISH) CGXF07E1-CD (FRENCH) CGXG07E1-CD (GERMAN)	Gr11D: TORQUE SPECIFICATIONS (M113-02-342-06000-01)	Attached sheet 4 (1/6)
		Gr11D: OIL PAN AND OIL PUMP (M113-00-811-29600-01)	Attached sheet 4 (2/6, 3/6)
		Gr11D: CRANKSHAFT AND CYLINDER BLOCK (M113-00-871-89000-01)	Attached sheet 4 (4/6)
2008 OUTLANDER Workshop Manual	CGXE08E2-CD (ENGLISH) CGXS08E2-CD (SPANISH) CGXF08E2-CD (FRENCH) CGXG08E2-CD (GERMAN)	Gr11D: TORQUE SPECIFICATIONS (M113-02-342-63900-01)	Attached sheet 4 (1/6)
		Gr11D: OIL PAN AND OIL PUMP (M113-00-811-54200-01)	Attached sheet 4 (2/6, 3/6)

	N/A (Russia)	Gr11D: CRANKSHAFT AND CYLINDER BLOCK (M113-00-872-53600-01)	Attached sheet 4 (4/6)
2009 OUTLANDER Workshop Manual	CGXE09E2-CD (ENGLISH) CGXS09E2-CD (SPANISH) CGXF09E2-CD (FRENCH) CGXG09E2-CD (GERMAN) CGXI09E2-CD (ITALIAN) N/A (Russia)	Gr11D: TORQUE SPECIFICATIONS (M113-02-343-30800-01)	Attached sheet 4 (1/6)
		Gr11D: OIL PAN AND OIL PUMP (M113-00-811-78000-01)	Attached sheet 4 (2/6, 3/6)
		Gr11D: CRANKSHAFT AND CYLINDER BLOCK (M113-00-873-58400-01)	Attached sheet 4 (4/6)
2010 OUTLANDER Workshop Manual	CGXE10E1-CD (ENGLISH) CGXS10E1-CD (SPANISH) CGXF10E1-CD (FRENCH) CGXG10E1-CD (GERMAN) CGXI10E1-CD (ITALIAN) N/A (Russia)	Gr11D: TORQUE SPECIFICATIONS (M113-02-344-13000-01)	Attached sheet 4 (1/6)
		Gr11D: OIL PAN AND OIL PUMP (M113-00-812-01700-01)	Attached sheet 4 (2/6, 3/6)
		Gr11D: CRANKSHAFT AND CYLINDER BLOCK (M113-00-873-64700-01)	Attached sheet 4 (4/6)
2011 OUTLANDER Workshop Manual	CGXE11E1-CD (ENGLISH) CGXS11E1-CD (SPANISH) CGXF11E1-CD (FRENCH) CGXG11E1-CD (GERMAN) CGXI11E1-CD (ITALIAN) N/A (Russia)	Gr11D: TORQUE SPECIFICATIONS (M113-02-344-13000-01)	Attached sheet 4 (1/6)
		Gr11D: OIL PAN AND OIL PUMP (M113-00-811-78000-01)	Attached sheet 4 (2/6, 3/6)
		Gr11D: CRANKSHAFT AND CYLINDER BLOCK (M113-00-873-64700-01)	Attached sheet 4 (4/6)
2012 OUTLANDER Workshop Manual	CGXE12E1-CD (ENGLISH) CGXS12E1-CD (SPANISH) CGXF12E1-CD (FRENCH) CGXG12E1-CD (GERMAN) CGXI12E1-CD (ITALIAN) N/A (Russia)	Gr11D: TORQUE SPECIFICATIONS (M113-02-344-13000-01)	Attached sheet 4 (1/6)
		Gr11D: OIL PAN AND OIL PUMP (M113-00-811-78000-01)	Attached sheet 4 (2/6, 3/6)
		Gr11D: CRANKSHAFT AND CYLINDER BLOCK (M113-00-873-64700-01)	Attached sheet 4 (4/6)
2013 OUTLANDER Workshop Manual Supplement <Russia KD>	N/A (Russia) CGFE13E1-CD (ENGLISH) CGFS13E1-CD (SPANISH) CGFF13E1-CD (FRENCH) CGFG13E1-CD (GERMAN) CGFI13E1-CD (ITALIAN)	Gr11J: OIL PAN AND OIL PUMP (M113-00-812-27700-01)	Attached sheet 4 (5/6)
		Gr11J: CRANKSHAFT AND CYLINDER BLOCK (M113-00-874-56500-01)	Attached sheet 4 (6/6)

G.EXP/GCC/MMAL/NZ

Applicable manual	Pub. No.	Applicable title (INFO ID)	Contents
2007 OUTLANDER Workshop Manual	PWRE0607R (ENGLISH) NZ:DRAFT MMAL:MR936083	Gr11D: TORQUE SPECIFICATIONS (M113-02-341-86301-01)	Attached sheet 4 (1/6)
		Gr11D: OIL PAN AND OIL PUMP (M113-00-811-29601-01)	Attached sheet 4 (2/6, 3/6)
		Gr11D: CRANKSHAFT AND CYLINDER BLOCK (M113-00-871-89000-01)	Attached sheet 4 (4/6)
2008 OUTLANDER Workshop Manual <JAPAN SPEC>	PWRE0712R (ENGLISH)	Gr11D: TORQUE SPECIFICATIONS (M113-02-341-86301-01)	Attached sheet 4 (1/6)
		Gr11D: OIL PAN AND OIL PUMP (M113-00-811-67200-01)	Attached sheet 4 (2/6, 3/6)
		Gr11D: CRANKSHAFT AND CYLINDER BLOCK (M113-00-872-87100-01)	Attached sheet 4 (4/6)
2008 OUTLANDER Workshop Manual <G.EXP/GCC>	PWRE0707R (ENGLISH) PWRS0708R (SPANISH)	Gr11D: TORQUE SPECIFICATIONS (M113-02-341-86301-01)	Attached sheet 4 (1/6)
		Gr11D: OIL PAN AND OIL PUMP (M113-00-811-54200-01)	Attached sheet 4 (2/6, 3/6)
		Gr11D: CRANKSHAFT AND CYLINDER BLOCK (M113-00-872-53600-01)	Attached sheet 4 (4/6)
2008 OUTLANDER Workshop Manual <CHINA/MMAL/NZ >	DRAFT (CHINA) MR936474 (MMAL) DRAFT (NZ)	Gr11D: TORQUE SPECIFICATIONS (M113-02-341-86301-01)	Attached sheet 4 (1/6)
		Gr11D: OIL PAN AND OIL PUMP (M113-00-811-29601-01)	Attached sheet 4 (2/6, 3/6)
		Gr11D: CRANKSHAFT AND CYLINDER BLOCK (M113-00-871-89000-01)	Attached sheet 4 (4/6)
2009 OUTLANDER	PWRE0810R (ENGLISH)	Gr11D: TORQUE SPECIFICATIONS	Attached sheet 4 (1/6)

Workshop Manual	PWRS0811R (SPANISH) NZ:DRAFT MMAL:MR936477	(M113-02-343-21200-01)	
		Gr11D: OIL PAN AND OIL PUMP (M113-00-811-78000-01)	Attached sheet 4 (2/6, 3/6)
		Gr11D: CRANKSHAFT AND CYLINDER BLOCK (M113-00-873-06700-01)	Attached sheet 4 (4/6)
2010 OUTLANDER Workshop Manual	PWRE0906R (ENGLISH) PWRS0907R (SPANISH) NZ:DRAFT MMAL:MR936925	Gr11D: TORQUE SPECIFICATIONS (M113-02-344-10700-01)	Attached sheet 4 (1/6)
		Gr11D: OIL PAN AND OIL PUMP (M113-00-812-01700-01)	Attached sheet 4 (2/6, 3/6)
		Gr11D: CRANKSHAFT AND CYLINDER BLOCK (M113-00-873-64700-01)	Attached sheet 4 (4/6)
2014 OUTLANDER Workshop Manual	PWRE1303R (ENGLISH) PWRS1304R (SPANISH) NZ:DRAFT MMAL:AU900408	Gr11D: OIL PAN AND OIL PUMP (M113-00-812-27700-01)	Attached sheet 4 (5/6)
		Gr11D: CRANKSHAFT AND CYLINDER BLOCK (M113-00-874-56500-01)	Attached sheet 4 (6/6)

RUSSIA

Applicable manual	Pub. No.	Applicable title (INFO ID)	Contents
2010 PAJERO SPORT/ NATIVA/ MONTERO SPORT/ CHALLENGER Workshop Manual	N/A	Gr11H: TORQUE SPECIFICATIONS (M113-02-344-38900-01)	Attached sheet 5 (1/4)
		Gr11H: OIL PAN AND OIL PUMP (M113-00-812-16900-01)	Attached sheet 5 (2/4, 3/4)
		Gr11H: CRANKSHAFT AND CYLINDER BLOCK (M113-00-873-83000-01)	Attached sheet 5 (4/4)
2011 PAJERO SPORT/ NATIVA/ MONTERO SPORT/ CHALLENGER Workshop Manual	N/A	Gr11H: TORQUE SPECIFICATIONS (M113-02-344-38900-01)	Attached sheet 5 (1/4)
		Gr11H: OIL PAN AND OIL PUMP (M113-00-812-16900-01)	Attached sheet 5 (2/4, 3/4)
		Gr11H: CRANKSHAFT AND CYLINDER BLOCK (M113-00-873-83000-01)	Attached sheet 5 (4/4)

Item	Specification
Oil pan and oil pump	
Drain plug	39 ± 5 N·m (29 ± 3 ft-lb)
Oil filter <MD360935>	14 ± 2 N·m (124 ± 17 in-lb)
Oil filter <MD332687, MD365876>	16 ± 4 N·m (13 ± 3 ft-lb)
Oil filter cover bolt	23 ± 6 N·m (17 ± 4 ft-lb)
Heat protector bolt	10 ± 2 N·m (89 ± 17 in-lb)
Engine oil pressure switch	10 ± 2 N·m (89 ± 17 in-lb)
Oil pan, lower bolt	10 ± 2 N·m (89 ± 17 in-lb)
Oil pan cover bolt	10 ± 2 N·m (89 ± 17 in-lb)
Oil pan, upper bolt	10 ± 2 N·m (89 ± 17 in-lb)
Oil screen bolt	20 ± 5 N·m (15 ± 3 ft-lb)
~~Beam bolt~~ <Incorrect> <Correct> Bearing cap bolt <Old>	~~24 ± 2 N·m (18 ± 1 ft-lb) → +60°~~
Plate bolt	23 ± 6 N·m (17 ± 4 ft-lb)
Oil pump case bolt	23 ± 6 N·m (17 ± 4 ft-lb)
Piston and connecting rod	
Connecting rod cap nut	20 ± 2 N·m (15 ± 1 ft-lb) → +90°
Crankshaft and cylinder block	
Drive plate bolt	76 ± 4 N·m (57 ± 2 ft-lb)
Rear plate bolt	10 ± 2 N·m (89 ± 17 in-lb)
Oil seal case bolt	10 ± 2 N·m (89 ± 17 in-lb)
Bearing cap bolt	24 ± 2 N·m (18 ± 1 ft-lb) → +90°
Crankshaft sensing ring bolt	12 ± 2 N·m (106 ± 17 in-lb)
Knock sensor	20 ± 2 N·m (15 ± 1 ft-lb)
Bank stiffener bolt	23 ± 6 N·m (17 ± 4 ft-lb)
Harness bracket bolt	10 ± 2 N·m (89 ± 17 in-lb)

<New> 24 ± 2 N·m (18 ± 1 ft-lb) → +60° <Bolt with washer>
20 ± 2 N·m (15 ± 1 ft-lb) → +90° <Flange bolt>

OIL PAN AND OIL PUMP

REMOVAL AND INSTALLATION

M1113008102147

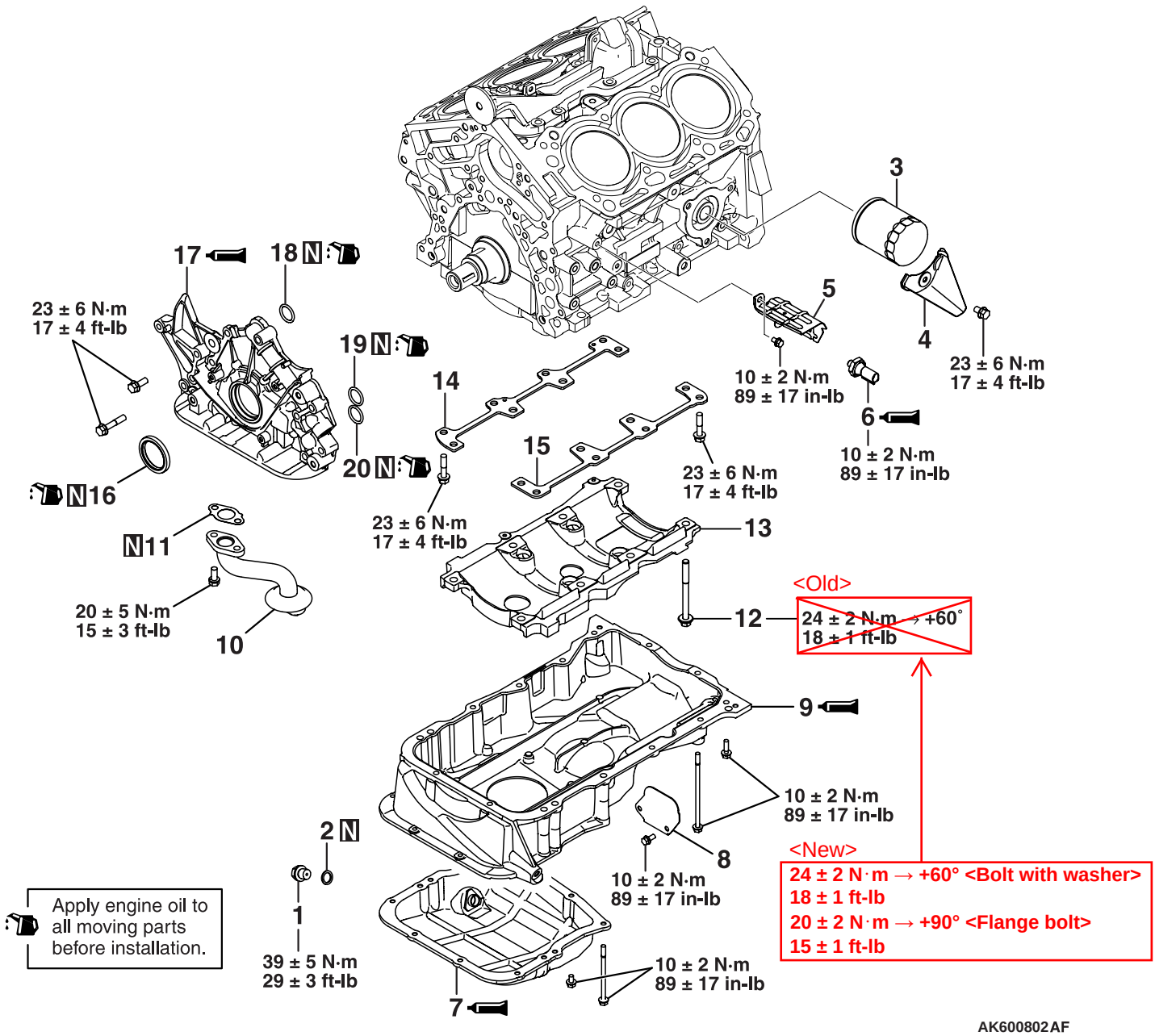

AK600802AF

Removal steps

	1.	Drain plug
>>J<<	2.	Drain plug gasket
>>I<<	3.	Oil filter
>>H<<	4.	Oil filter cover
	5.	Heat protector
>>G<<	6.	Engine oil pressure switch
<<A>> >>F<<	7.	Oil pan, lower
	8.	Oil pan cover
<<B>> >>E<<	9.	Oil pan, upper
	10.	Oil screen

Removal steps (Continued)

>>D<<	11.	Oil screen gasket
>>C<<	12.	Bearing cap bolt
>>C<<	13.	Beam
>>C<<	14.	Right plate
>>C<<	15.	Left plate
>>B<<	16.	Crankshaft front oil seal
>>A<<	17.	Oil pump case
	18.	O-ring
	19.	O-ring
	20	O-ring

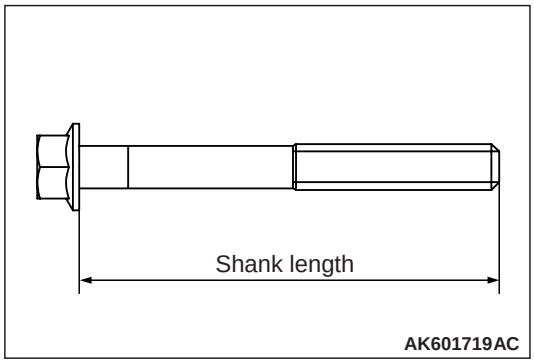

>>C<< BEAM / BEARING CAP BOLT / RIGHT PLATE / LEFT PLATE INSTALLATION

1. Before installing the bearing cap bolt, check the bolt screw head is not damaged. If the screw head extremely gets damaged, replace it with a new bolt. The standard length of the new bolt measured from under the head is as follows:

   Standard value: ~~100.7 – 101.7 mm (3.97 – 4.00 inches)~~ <Old>

⚠ CAUTION

When the beam is removed and installed, never loosen the tightening bolts of the crankshaft bearing cap.

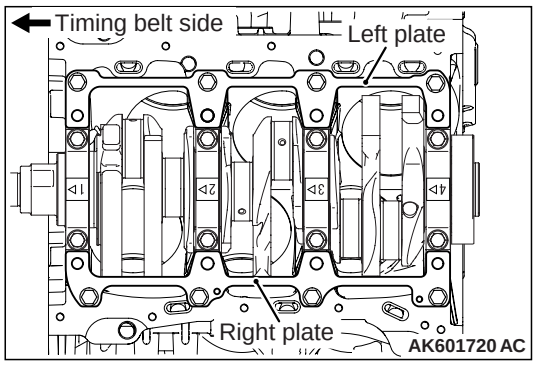

2. Put the right and left plates on the crankshaft bearing, Temporarily tighten bolt.

   <New>
   100.7 – 101.7 mm (3.97 – 4.00 inches) <Bolt with washer>
   98.5 – 99.5 mm (3.88 – 3.92 inches) <Flange bolt>

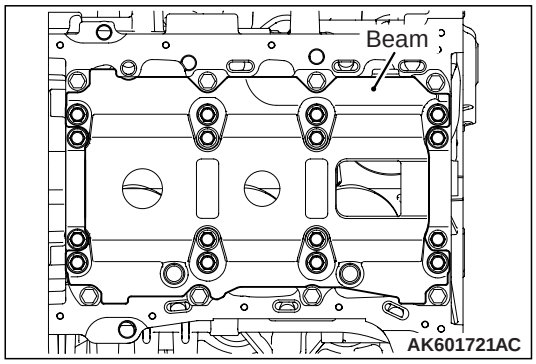

3. Put the beam on them, Temporarily tighten bolt.

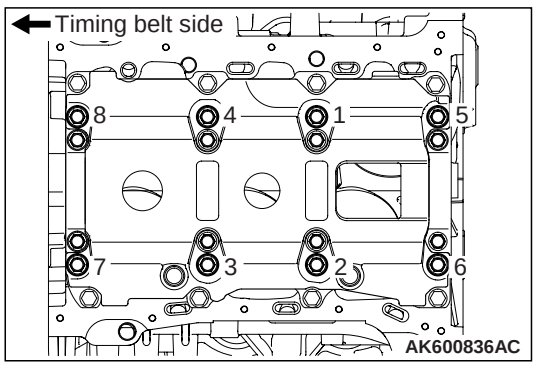

4. Tighten the beam bolts to the specified torque in the tightening sequence shown.

   <Old>
   Tightening torque: ~~24 ± 2 N·m (18 ± 1 ft-lb)~~

   <New>
   24 ± 2 N·m (18 ± 1 ft-lb) <Bolt with washer>
   20 ± 2 N·m (15 ± 1 ft-lb) <Flange bolt>

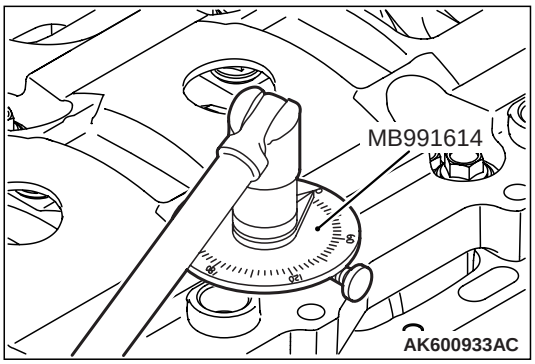

⚠ CAUTION

- **When the tightening angle is smaller than the specified tightening angle, the appropriate tightening capacity cannot be secured.**
- **When the tightening angle is larger than the specified tightening angle, remove the bolt to start from the beginning again according to the procedure.**

5. Using the special tool MB991614, tighten the beam bolt (M9) ~~60 degrees~~ in accordance with the tightening order.

<Old>

<New> 60 degrees <Bolt with washer> or 90 degrees <Flange bolt>

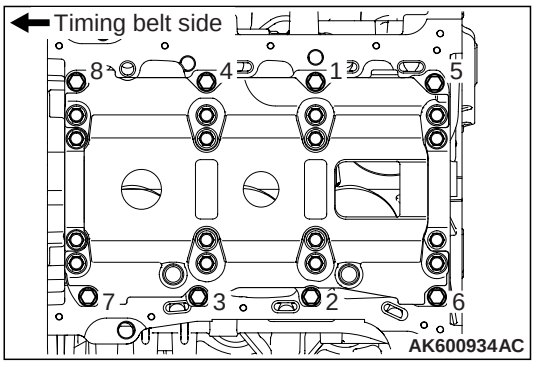

6. Tighten the plate bolts to the specified torque in the tightening sequence shown.

Tightening torque: 23 ± 6 N·m (17 ± 4 ft-lb)

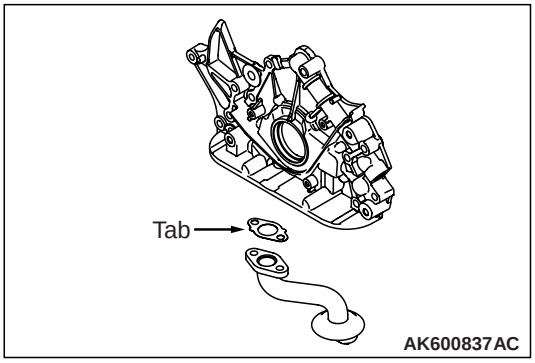

>>D<< OIL SCREEN GASKET INSTALLATION

Install the oil screen gasket so that the tab is positioned as shown in the illustration.

>>E<< OIL PAN UPPER INSTALLATION

1. Clean the gasket surfaces of the oil pan upper and oil pan lower.

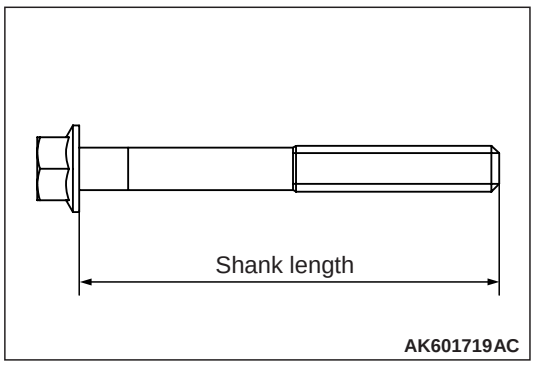

>>E<< BEARING CAP / BEARING CAP BOLT INSTALLATION

1. Before installing the bearing cap bolt, check the bolt screw head is not damaged. If the screw head extremely gets damaged, replace it with a new bolt. The standard length of the new bolt measured from under the head is as follows:

Standard value: ~~91.2 – 92.2 mm (3.59 – 3.63 inches)~~

<Old>

<New>

91.2 – 92.2 mm (3.59 – 3.63 inches) <Bolt with washer>
88.5 – 89.5 mm (3.49 – 3.52 inches) <Flange bolt>

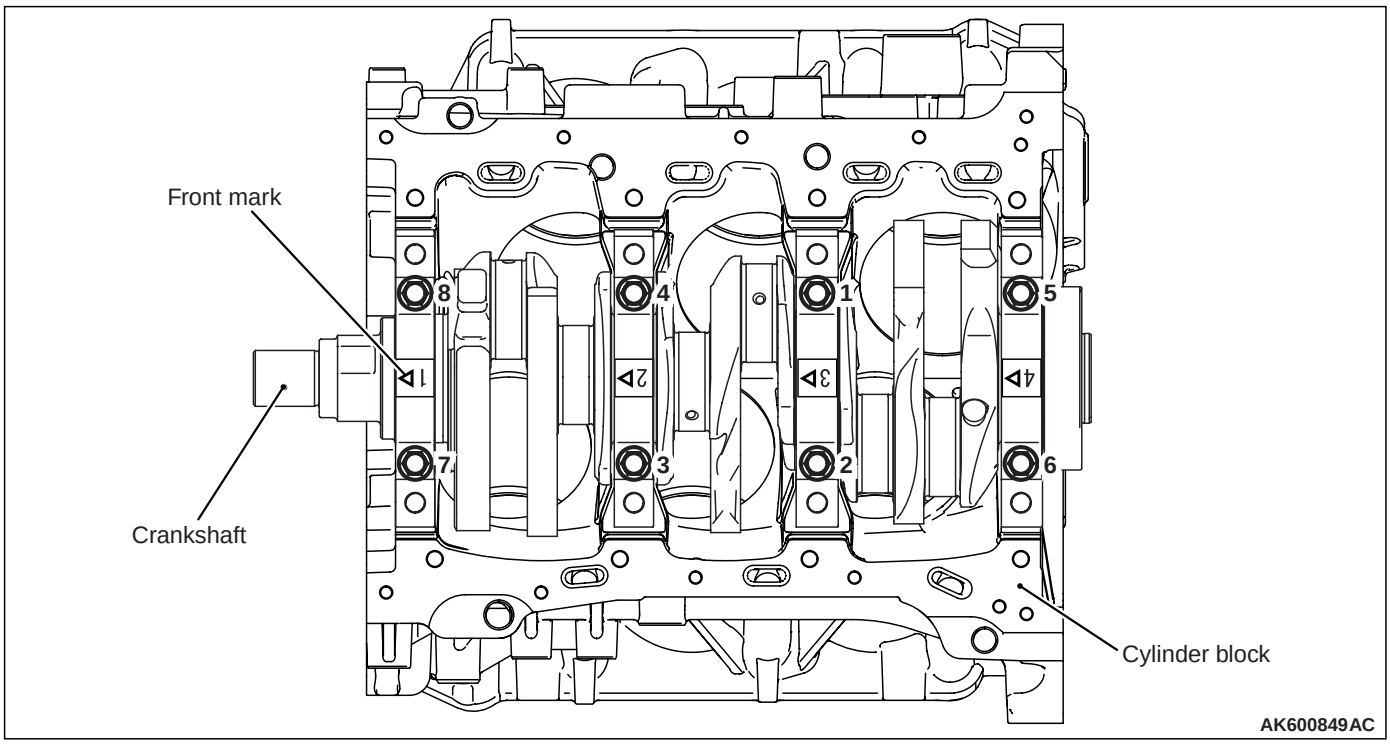

2. Attach the bearing cap on the cylinder block as shown in the illustration.
3. Tighten the bearing cap bolts to specified torque in the sequence shown in the illustration.

Tightening torque: 24 ± 2 N·m (18 ± 1 ft-lb)

4. Make a paint mark on the head of each bolt.

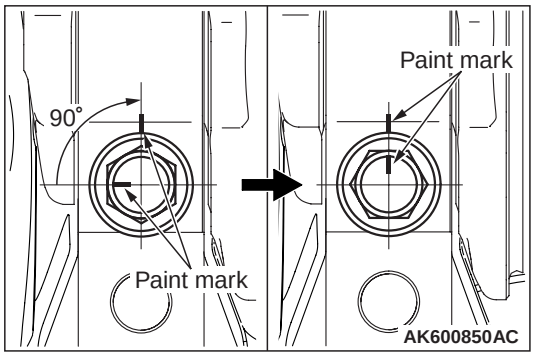

⚠ CAUTION

- **When the tightening angle is smaller than the specified tightening angle, the appropriate tightening capacity cannot be secured.**
- **When the tightening angle is larger than the specified tightening angle, remove the bolt to start from the beginning again according to the procedure.**

5. Make a paint mark on the bearing cap 90 degrees from the paint mark made on the bolt, in the direction of tightening the bolt.

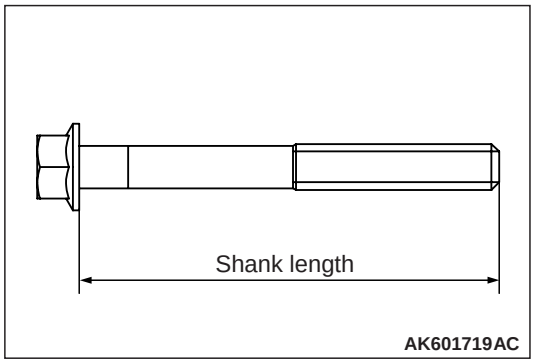

>>C<< BEAM / BEARING CAP BOLT / RIGHT PLATE / LEFT PLATE INSTALLATION

1. Before installing the bearing cap bolt, check the bolt screw head is not damaged. If the screw head extremely gets damaged, replace it with a new bolt. The standard length of the new bolt measured from under the head is as follows:

   Standard value: ~~100.7 – 101.7 mm (3.97 – 4.00 inches)~~

   <Incorrect>

⚠ CAUTION

When the beam is removed and installed, never loosen the tightening bolts of the crankshaft bearing cap.

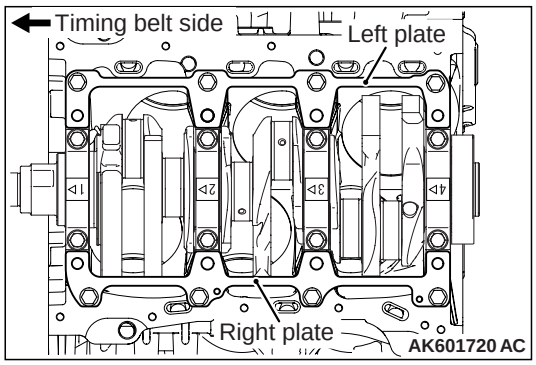

2. Put the right and left plates on the crankshaft bearing, Temporarily tighten bolt.

   <Correct>

   98.5 – 99.5 mm (3.88 – 3.92 inches)

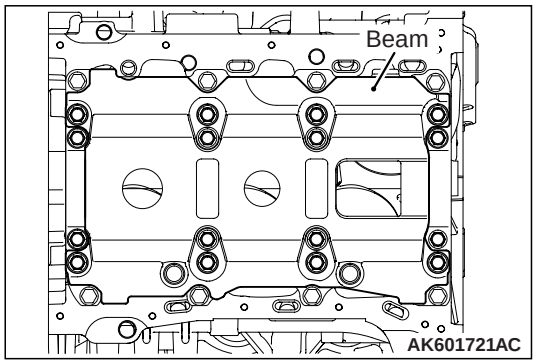

3. Put the beam on them, Temporarily tighten bolt.

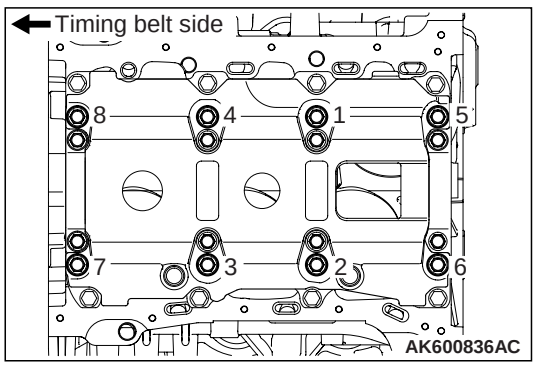

4. Tighten the beam bolts to the specified torque in the tightening sequence shown.

   Tightening torque: 20 ± 2 N·m (15 ± 1 ft-lb)

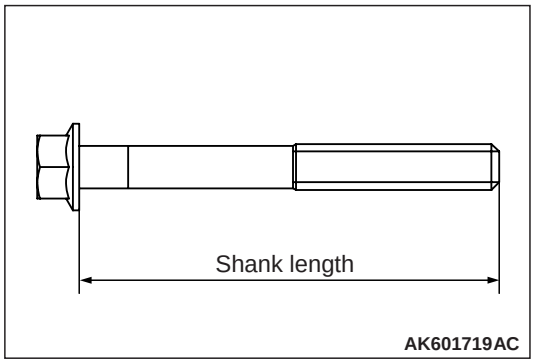

>>E<< BEARING CAP / BEARING CAP BOLT INSTALLATION

1. Before installing the bearing cap bolt, check the bolt screw head is not damaged. If the screw head extremely gets damaged, replace it with a new bolt. The standard length of the new bolt measured from under the head is as follows:

   Standard value: ~~91.2 – 92.2 mm (3.59 – 3.63 inches)~~
   <Incorrect>

   <Correct>
   88.5 – 89.5 mm (3.49 – 3.52 inches)

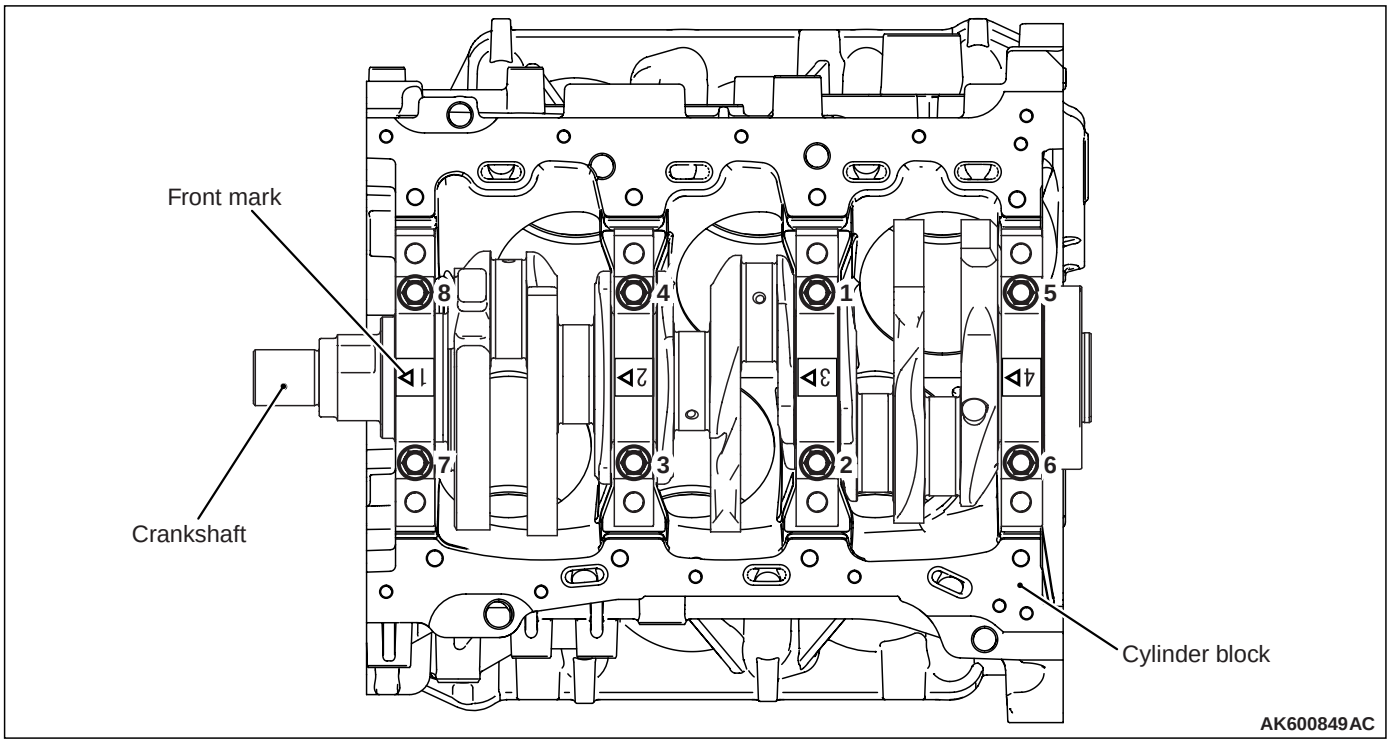

2. Attach the bearing cap on the cylinder block as shown in the illustration.
3. Tighten the bearing cap bolts to specified torque in the sequence shown in the illustration.

   Tightening torque: 24 ± 2 N·m (18 ± 1 ft-lb)

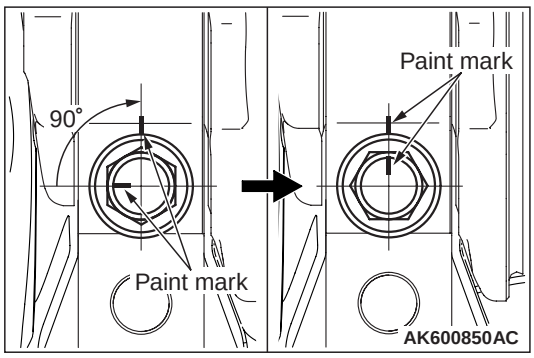

4. Make a paint mark on the head of each bolt.

⚠ CAUTION

- **When the tightening angle is smaller than the specified tightening angle, the appropriate tightening capacity cannot be secured.**
- **When the tightening angle is larger than the specified tightening angle, remove the bolt to start from the beginning again according to the procedure.**

5. Make a paint mark on the bearing cap 90 degrees from the paint mark made on the bolt, in the direction of tightening the bolt.

Item	N·m
Oil pan and oil pump	
Drain plug	39 ± 5
Oil filter <MD360935>	14 ± 2
Oil filter <MD332687, MD365876>	16 ± 4
Oil filter cover bolt	23 ± 6
Heat protector bolt	10 ± 2
Oil pressure switch	10 ± 2
Oil pan, lower bolt	10 ± 2
Oil pan cover bolt	10 ± 2
Oil pan, upper bolt	10 ± 2
Oil screen bolt	20 ± 5
Bearing cap bolt	<Old> ~~24 ± 2 → +60°~~
Plate bolt	23 ± 6
Oil pump case bolt	23 ± 6 <New> 24 ± 2 N·m → +60° <Bolt with washer> 20 ± 2 N·m → +90° <Flange bolt>
Piston and connecting rod	
Connecting rod cap nut	20 ± 2 → +90°
Crankshaft and cylinder block	
Drive plate bolt	76 ± 4
Rear plate bolt	10 ± 2
Oil seal case bolt	10 ± 2
Bearing cap bolt	24 ± 2 → +90°
Crankshaft sensing ring bolt	12 ± 2
Detonation sensor	20 ± 2
Bank stiffener bolt	23 ± 6

OIL PAN AND OIL PUMP

REMOVAL AND INSTALLATION

M1113008101780

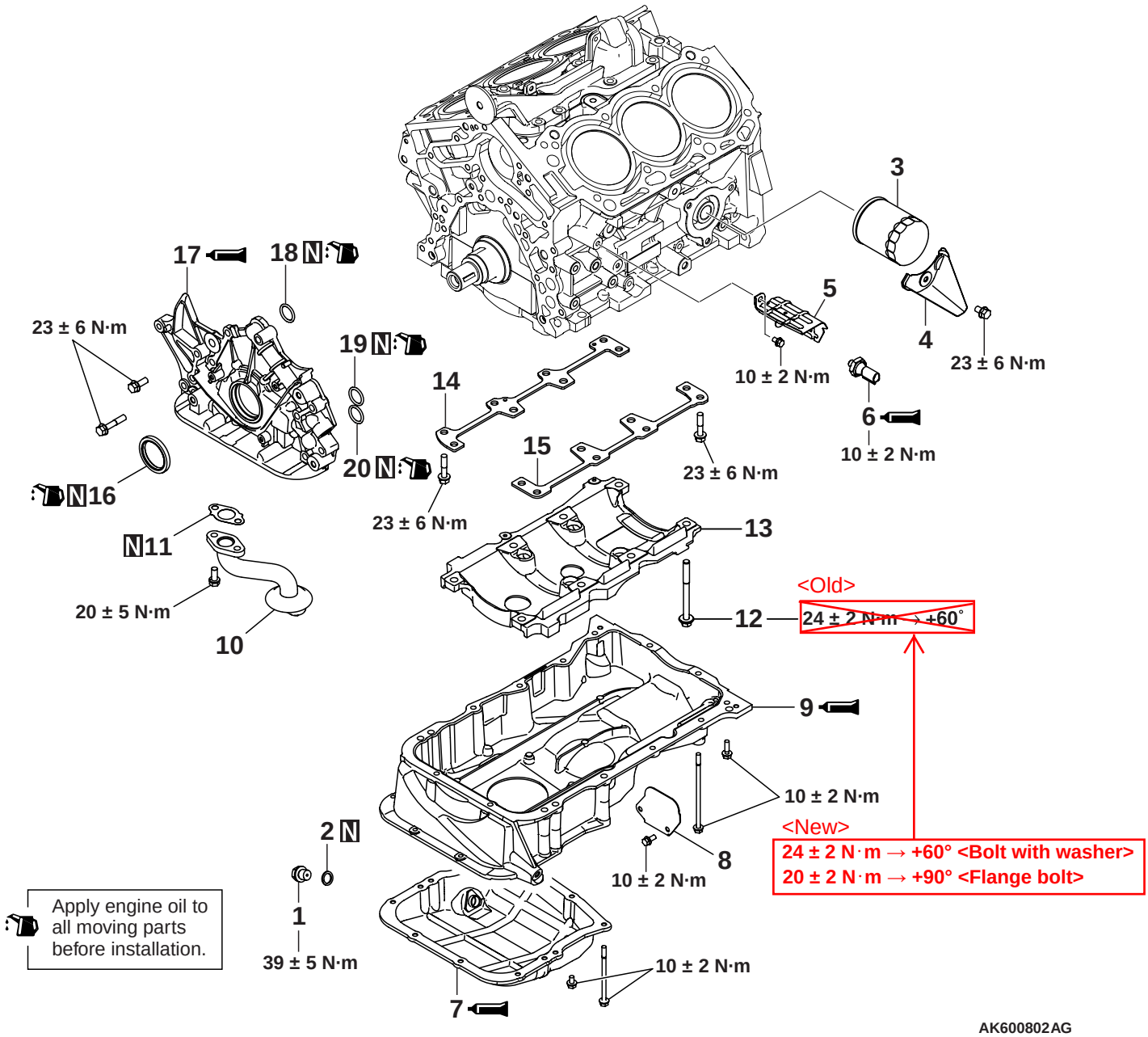

Removal steps

	1.	Drain plug
>>J<<	2.	Drain plug gasket
>>I<<	3.	Oil filter
>>H<<	4.	Oil filter cover
	5.	Heat protector
>>G<<	6.	Oil pressure switch
<<A>> >>F<<	7.	Oil pan, lower
	8.	Oil pan cover
<<B>> >>E<<	9.	Oil pan, upper
	10.	Oil screen

Removal steps (Continued)

>>D<<	11.	Oil screen gasket
>>C<<	12.	Bearing cap bolt
>>C<<	13.	Beam
>>C<<	14.	Right plate
>>C<<	15.	Left plate
>>B<<	16.	Crankshaft front oil seal
>>A<<	17.	Oil pump case
	18.	O-ring
	19.	O-ring
	20.	O-ring

<New>
100.7 — 101.7 mm <Bolt with washer>
98.5 — 99.5 mm <Flange bolt>

>>C<< BEAM / BEARING CAP BOLT INSTALLATION

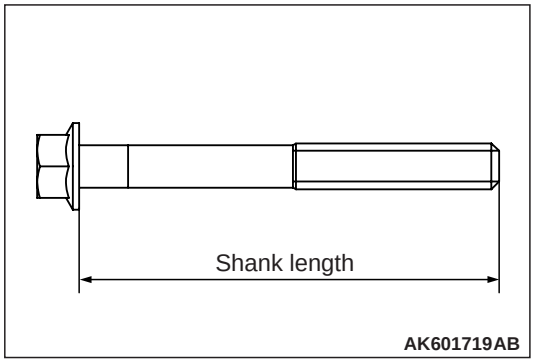

1. Before installing the bearing cap bolt, check the bolt screw head is not damaged. If the screw head extremely gets damaged, replace it with a new bolt. The standard length of the new bolt measured from under the head is as follows:

   Standard value: ~~100.7 — 101.7 mm~~ <Old>

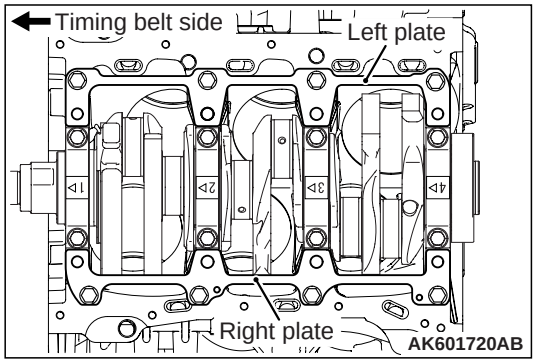

⚠ CAUTION
When the beam is removed and installed, never loosen the tightening bolts of the crankshaft bearing cap.

2. Put the right and left plates on the crankshaft bearing, Temporarily tighten bolt.

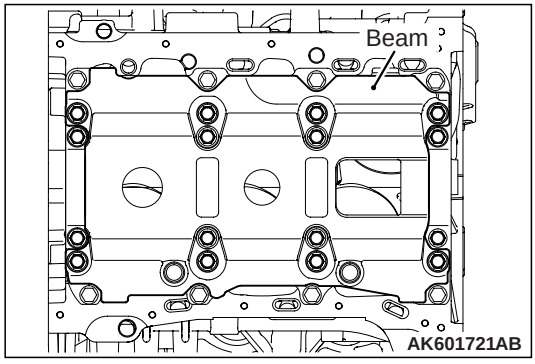

3. Put the beam on them, Temporarily tighten bolt.

<New>
24 ± 2 N·m <Bolt with washer>
20 ± 2 N·m <Flange bolt>

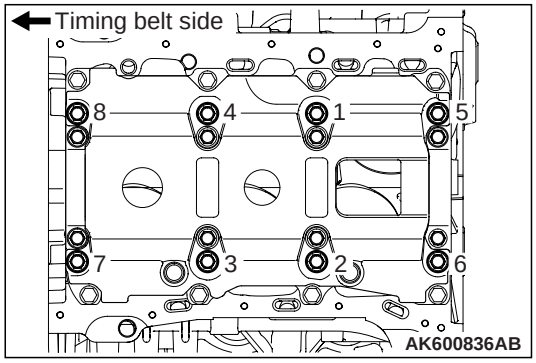

4. Tighten the beam bolts to the specified torque in the tightening sequence shown.

   Tightening torque: ~~24 ± 2 N·m~~ <Old>

⚠ CAUTION
- **When the tightening angle is smaller than the specified tightening angle, the appropriate tightening capacity cannot be secured.**
- **When the tightening angle is larger than the specified tightening angle, remove the bolt to start from the beginning again according to the procedure.**

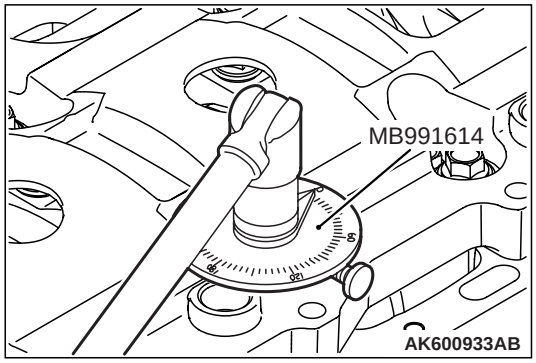

5. Using the special tool Angle gauge (MB991614), tighten the beam bolt (M9) ~~90°~~ in accordance with the tightening order. <Old>

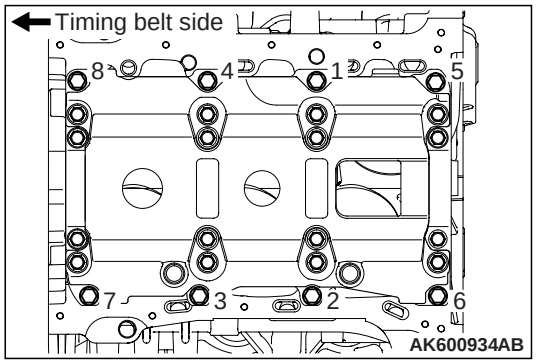

6. Tighten the plate bolts to the specified torque in the tightening sequence shown.

   Tightening torque: 23 ± 6 N·m

<New> **60° <Bolt with washer>**
or 90° <Flange bolt>

>>E<< BEARING CAP / BEARING CAP BOLT INSTALLATION

<Old>
Standard value: ~~91.2 – 92.2 mm~~

<New>
91.2 – 92.2 mm <Bolt with washer>
88.5 – 89.5 mm <Flange bolt>

1. Before installing the bearing cap bolt, check the bolt screw head is not damaged. If the screw head extremely gets damaged, replace it with a new bolt. The standard length of the new bolt measured from under the head is as follows:

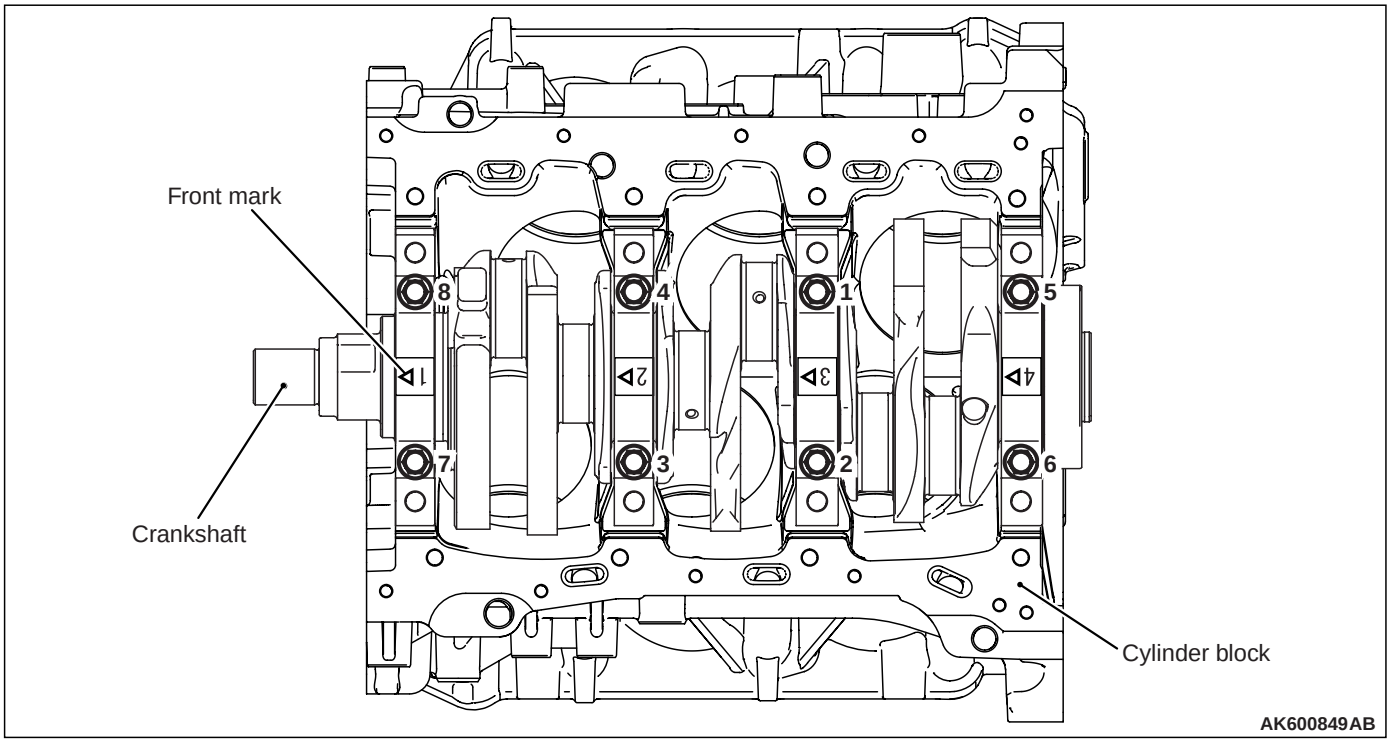

2. Attach the bearing cap on the cylinder block as shown in the illustration.
3. Tighten the bearing cap bolts to specified torque in the sequence shown in the illustration.

   Tightening torque: 24 ± 2 N·m

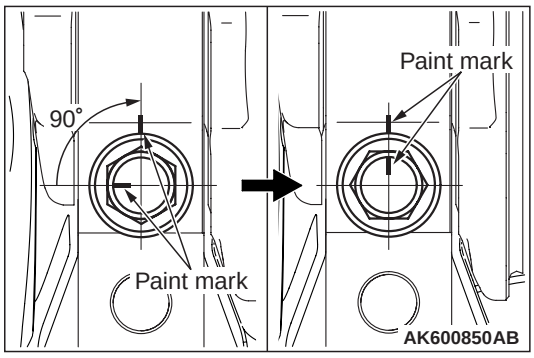

4. Make a paint mark on the head of each bolt.

⚠ CAUTION

- **When the tightening angle is smaller than the specified tightening angle, the appropriate tightening capacity cannot be secured.**
- **When the tightening angle is larger than the specified tightening angle, remove the bolt to start from the beginning again according to the procedure.**

5. Make a paint mark on the bearing cap 90° from the paint mark made on the bolt, in the direction of tightening the bolt.
6. Turn each bolt 90° in the tightening sequence specified in step 2, and make sure that the paint marks on the bolt and cap are aligned.
7. Check that the crankshaft rotates smoothly.

>>C<< BEAM / BEARING CAP BOLT INSTALLATION

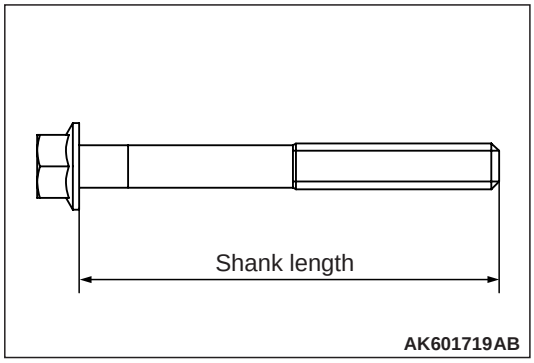

1. Before installing the bearing cap bolt, check the bolt screw head is not damaged. If the screw head extremely gets damaged, replace it with a new bolt. The standard length of the new bolt measured from under the head is as follows:

Standard value: ~~100.7 — 101.7 mm~~ <Incorrect>

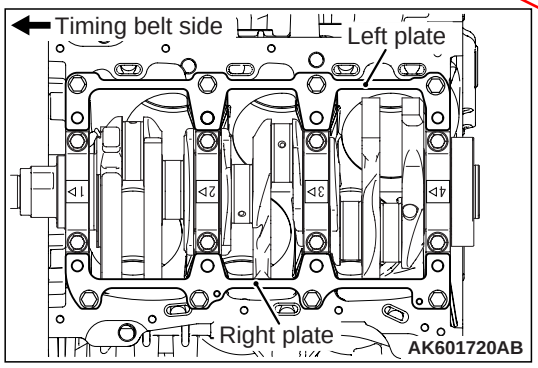

<Correct> **98.5 — 99.5 mm**

⚠ CAUTION

When the beam is removed and installed, never loosen the tightening bolts of the crankshaft bearing cap.

2. Put the right and left plates on the crankshaft bearing, Temporarily tighten bolt.

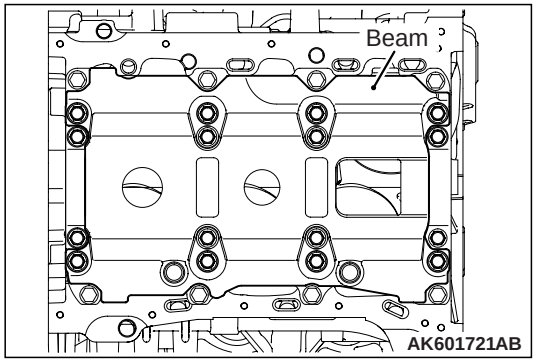

3. Put the beam on them, Temporarily tighten bolt.

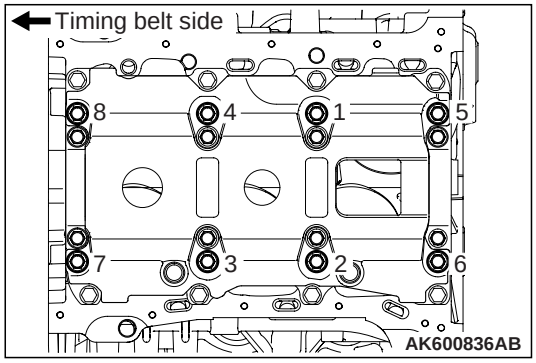

4. Tighten the beam bolts to the specified torque in the tightening sequence shown.

Tightening torque: 20 ± 2 N·m

⚠ CAUTION

- **When the tightening angle is smaller than the specified tightening angle, the appropriate tightening capacity cannot be secured.**
- **When the tightening angle is larger than the specified tightening angle, remove the bolt to start from the beginning again according to the procedure.**

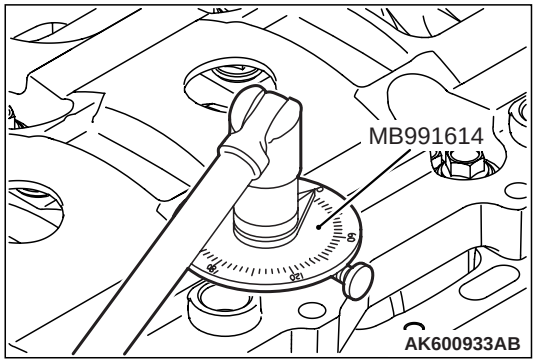

5. Using the special tool Angle gauge (MB991614), tighten the beam bolt (M9) 90° in accordance with the tightening order.

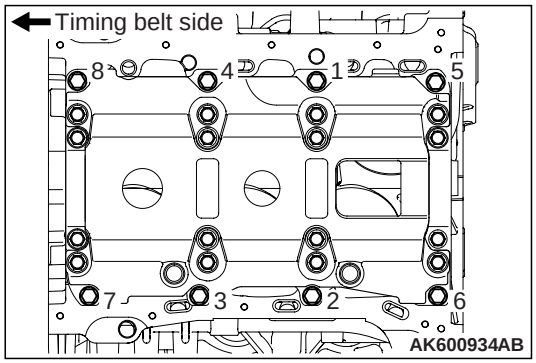

6. Tighten the plate bolts to the specified torque in the tightening sequence shown.

Tightening torque: 23 ± 6 N·m

>>E<< BEARING CAP / BEARING CAP BOLT INSTALLATION

<Incorrect>
Standard value: ~~91.2 – 92.2 mm~~
<Correct>
88.5 – 89.5 mm

1. Before installing the bearing cap bolt, check the bolt screw head is not damaged. If the screw head extremely gets damaged, replace it with a new bolt. The standard length of the new bolt measured from under the head is as follows:

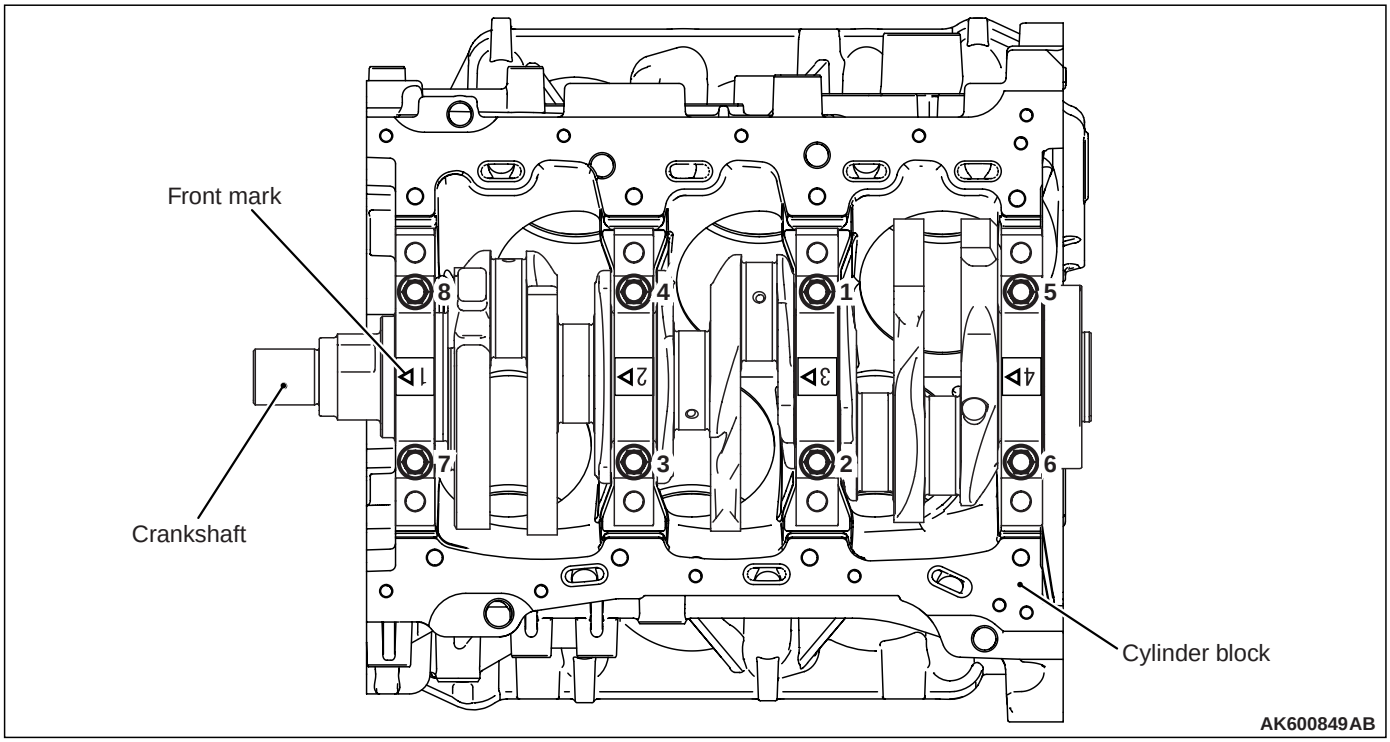

2. Attach the bearing cap on the cylinder block as shown in the illustration.
3. Tighten the bearing cap bolts to specified torque in the sequence shown in the illustration.

   Tightening torque: 24 ± 2 N·m

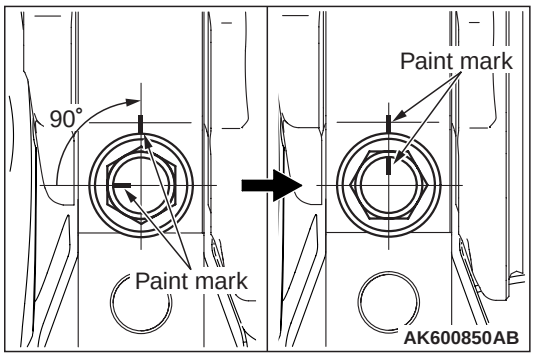

4. Make a paint mark on the head of each bolt.

⚠ CAUTION

- **When the tightening angle is smaller than the specified tightening angle, the appropriate tightening capacity cannot be secured.**
- **When the tightening angle is larger than the specified tightening angle, remove the bolt to start from the beginning again according to the procedure.**

5. Make a paint mark on the bearing cap 90° from the paint mark made on the bolt, in the direction of tightening the bolt.
6. Turn each bolt 90° in the tightening sequence specified in step 2, and make sure that the paint marks on the bolt and cap are aligned.
7. Check that the crankshaft rotates smoothly.

Item	N·m
Oil pan and oil pump	
Drain plug	39 ± 5
Oil filter <MD360935>	14 ± 2
Oil filter <MD332687, MD365876>	16 ± 4
Oil filter bracket bolt	26 ± 6
Oil pressure switch	10 ± 2
Oil pan bolt	9.5 ± 2.5
Oil screen bolt	20 ± 5
Bearing cap bolt	<Old> ~~24 ± 2 → +60° ± 2°~~
Plate bolt	23 ± 6
Relief plug	44 ± 5 <New> 24 ± 2 N·m → +60° ± 2° <Bolt with washer> 20 ± 2 N·m → +90° ± 2° <Flange bolt>
Oil pump cover bolt	9.9 ± 2.1
Oil pump case bolt	23 ± 6
Piston and connecting rod	
Connecting rod cap nut	20 → +90°
Crankshaft and cylinder block	
Drive plate bolt	20 ± 2 → 76 ± 4
Rear plate bolt	9.5 ± 2.5
Oil seal case bolt	9.5 ± 2.5
Bearing cap bolt	24 ± 2 → +90° ± 2°
Crankshaft sensing ring bolt	12 ± 2
Detonation sensor	20 ± 2
Bank stiffener bolt	23 ± 6
Bracket	
Engine support bracket bolt	47 ± 11

OIL PAN AND OIL PUMP

REMOVAL AND INSTALLATION

M1113008102169

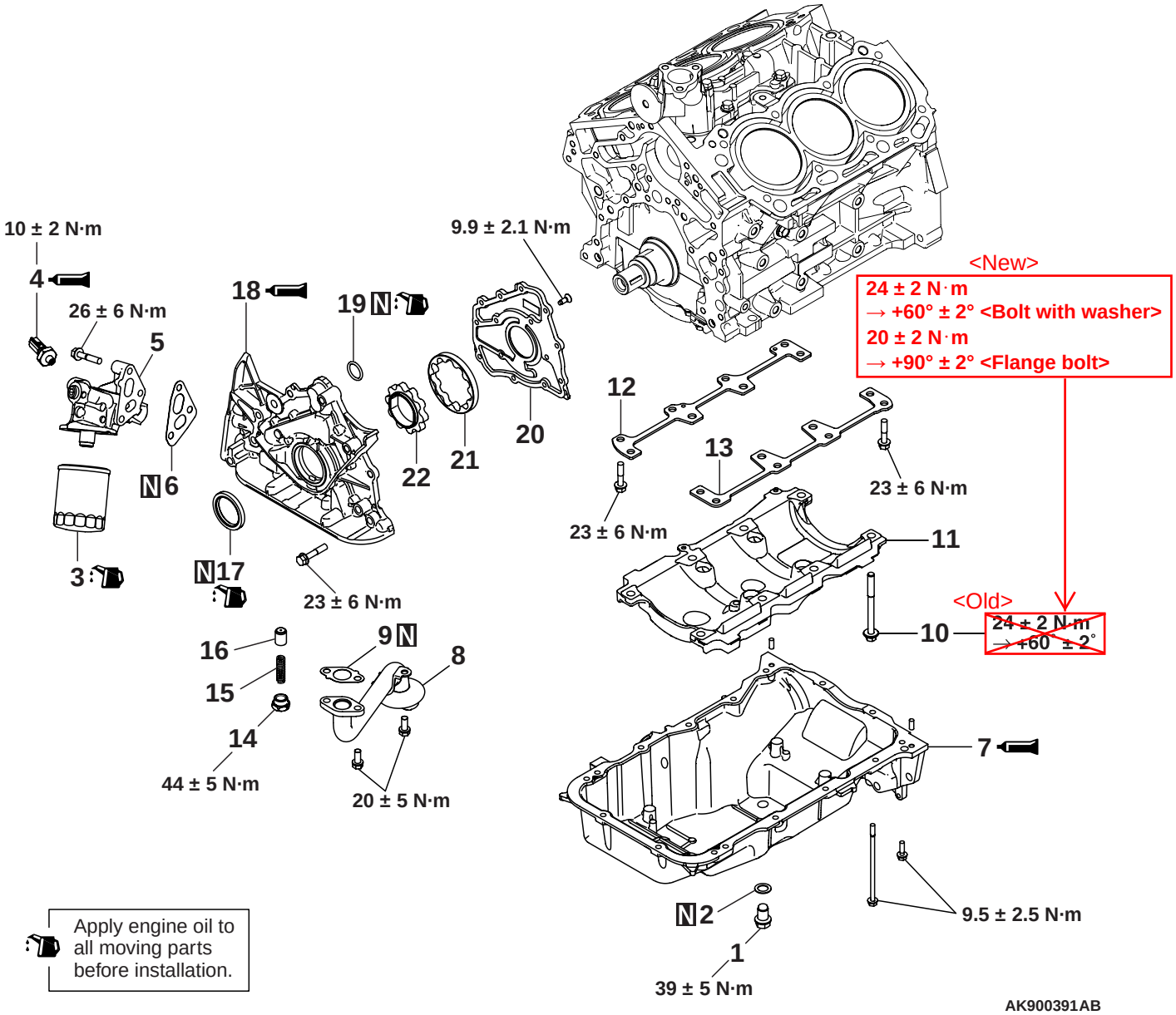

Removal steps

1. Drain plug
2. Drain plug gasket
- >>G<< 3. Oil filter
- >>F<< 4. Oil pressure switch
5. Oil filter bracket
6. Oil filter bracket gasket
- <<A>> >>E<< 7. Oil pan
8. Oil screen
- >>D<< 9. Oil screen gasket
- >>C<< 10. Bearing cap bolt
- >>C<< 11. Beam

Removal steps (Continued)

- >>C<< 12. Right plate
- >>C<< 13. Left plate
14. Relief plug
15. Relief spring
16. Relief plunger
- >>B<< 17. Crankshaft front oil seal
- >>A<< 18. Oil pump case
19. O-ring
20. Oil pump cover
21. Oil pump outer rotor
22. Oil pump inner rotor

<New>
100.7 — 101.7 mm <Bolt with washer>
98.5 — 99.5 mm <Flange bolt>

>>C<< BEAM / BEARING CAP BOLT INSTALLATION

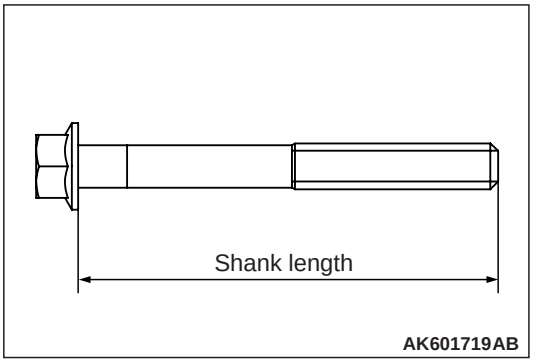

1. Before installing the bearing cap bolt, check the bolt screw head is not damaged. If the screw head extremely gets damaged, replace it with a new bolt. The standard length of the new bolt measured from under the head is as follows:

   Standard value: ~~100.7 — 101.7 mm~~ <Old>

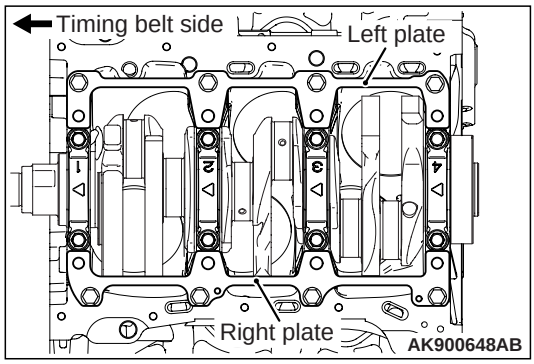

⚠ CAUTION
When the beam is removed and installed, never loosen the tightening bolts of the crankshaft bearing cap.

2. Put the right and left plates on the crankshaft bearing, Temporarily tighten bolt.

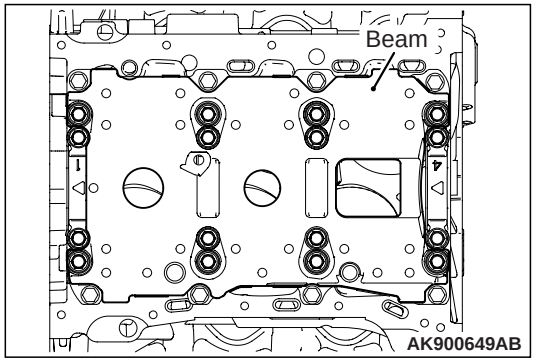

3. Put the beam on them, Temporarily tighten bolt.

<New>
24 ± 2 N·m <Bolt with washer>
20 ± 2 N·m <Flange bolt>

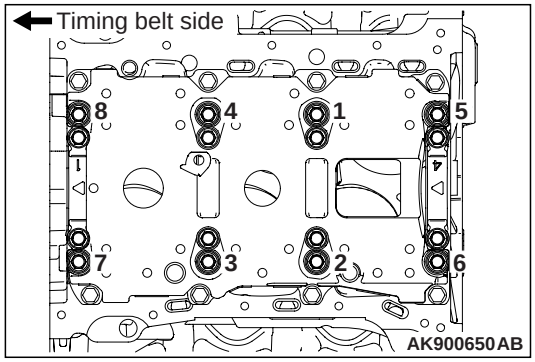

4. Tighten the beam bolts to the specified torque in the tightening sequence shown.

   Tightening torque: ~~24 ± 2 N·m~~ <Old>

⚠ CAUTION
- **When the tightening angle is smaller than the specified tightening angle, the appropriate tightening capacity cannot be secured.**
- **When the tightening angle is larger than the specified tightening angle, remove the bolt to start from the beginning again according to the procedure.**

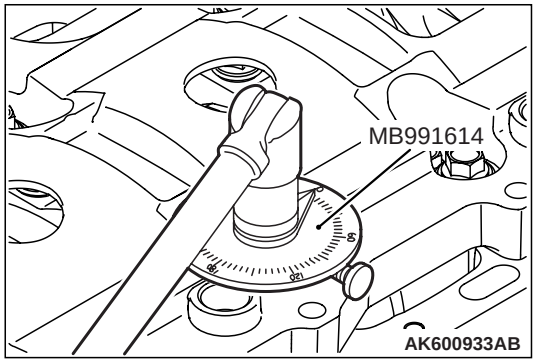

5. Using the special tool Angle gauge (MB991614), tighten the beam bolt (M9) ~~90°~~ in accordance with the tightening order. <Old>

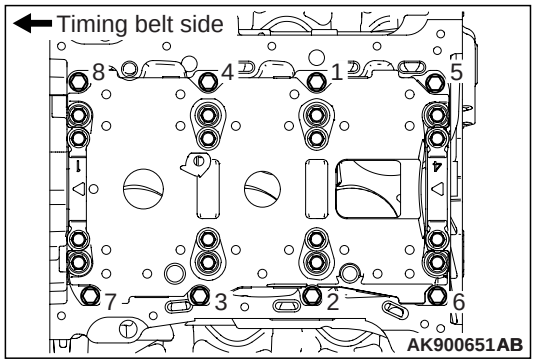

6. Tighten the plate bolts to the specified torque in the tightening sequence shown.

   Tightening torque: 23 ± 6 N·m

<New> **60° <Bolt with washer>**
or 90° <Flange bolt>

>>E<< BEARING CAP / BEARING CAP BOLT INSTALLATION

Standard value: <Old> ~~91.2 – 92.2 mm~~

<New>
91.2 – 92.2 mm <Bolt with washer>
88.5 – 89.5 mm <Flange bolt>

1. Before installing the bearing cap bolt, check the bolt screw head is not damaged. If the screw head extremely gets damaged, replace it with a new bolt. The standard length of the new bolt measured from under the head is as follows:

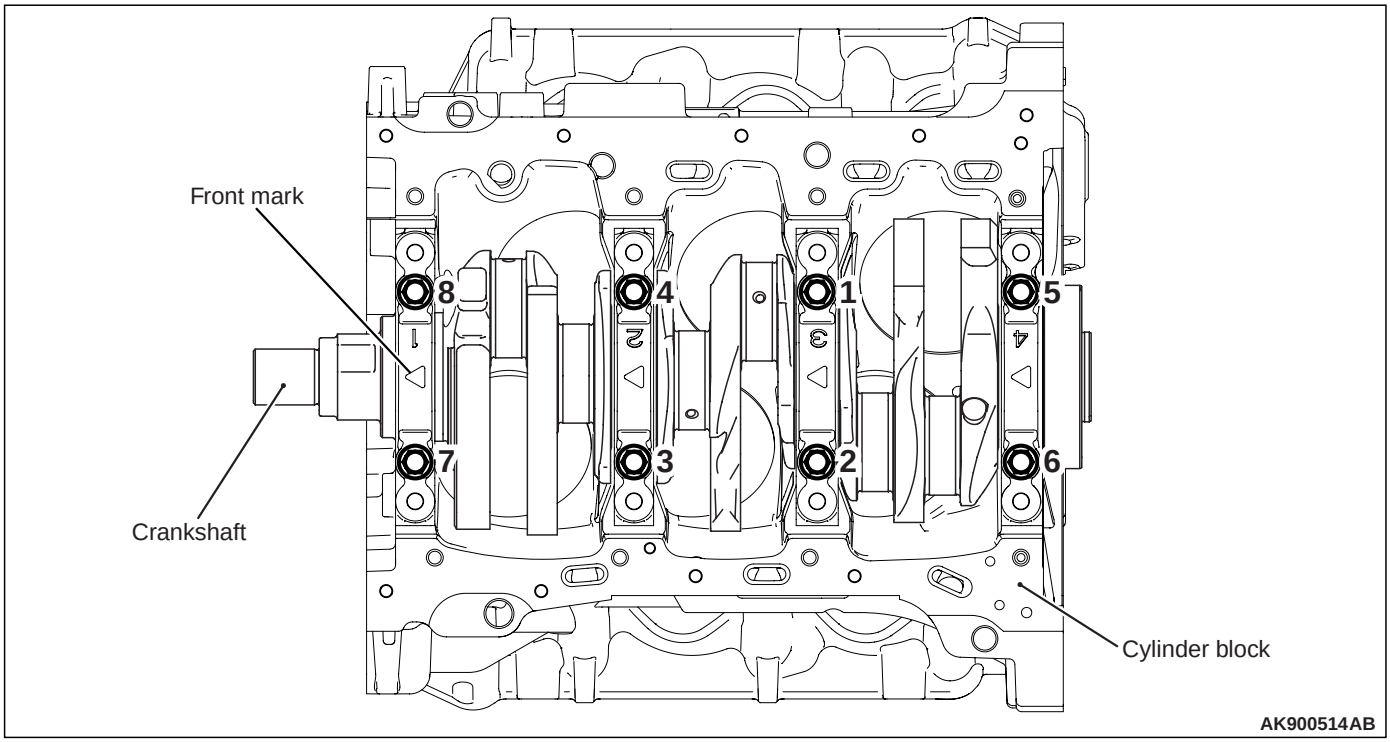

2. Attach the bearing cap on the cylinder block as shown in the illustration.
3. Tighten the bearing cap bolts to specified torque in the sequence shown in the illustration.

   Tightening torque: 24 ± 2 N·m

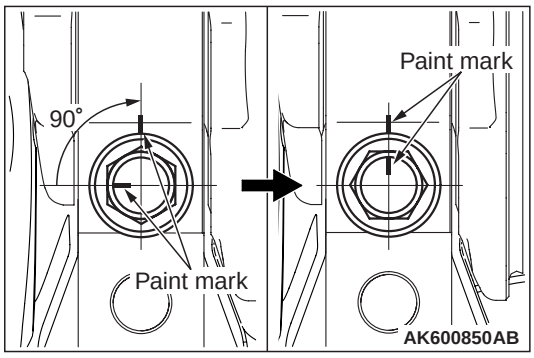

4. Make a paint mark on the head of each bolt.

⚠ CAUTION

- **When the tightening angle is smaller than the specified tightening angle, the appropriate tightening capacity cannot be secured.**
- **When the tightening angle is larger than the specified tightening angle, remove the bolt to start from the beginning again according to the procedure.**

5. Make a paint mark on the bearing cap 90° from the paint mark made on the bolt, in the direction of tightening the bolt.
6. Turn each bolt 90° in the tightening sequence specified in step 2, and make sure that the paint marks on the bolt and cap are aligned.
7. Check that the crankshaft rotates smoothly.