SERVICE BULLETIN

MITSUBISHI MOTORS

GLOBAL AFTER SALES OFFICE, MITSUBISHI MOTORS CORPORATION

PURPOSE : CORRECTION	ISSUE NO. : MSB-13EXML51-501	DATE : 2013-02-28
SUBJECT : CHANGE OF UNDERCOVER AND AMOUNT OF BOLTS		<Destination/Model> (AS SHOWN BELOW) <M/Y> 13.5
GROUP : EXTERIOR		i-MiEV(HA3W)

1. Description:

See the attached document for the correction of the error existing in the applicable service manual.

2. Applicable Manual :

FOR EUR/MMAL/NZ/MMNA

APPLICABLE MANUAL	Pub. No.	INFO ID	CONTENTS
2013.5 i-MiEV Workshop Manual CD-ROM (EU)	CHAE13E1-CD (Eng) CHAF13E1-CD (Fra) CHAG13E1-CD (Ger) CHAI13E1-CD (Ita) CHAS13E1-CD (Spa)	UNDER COVER REMOVAL AND INSTALLATION (M511-01-961-31600-01)	Attached sheet 4
2013.5 i-MiEV Workshop Manual CD-ROM (MMAL/NZ)	MMAL:AU900414 NZ:DRAFT	After the MOTOR MOUNTING REMOVAL AND INSTALLATION (M321-00-690-04300-01)	

APPLICABLE MANUAL	Pub. No.	INFO ID	CONTENTS
2013.5 i-MiEV Service Manual CD-ROM(MMNA)	MSCD-318B-2013M	UNDER COVER REMOVAL AND INSTALLATION (M511-01-960-95900-01)	Attached sheet 5

3. Details:

See the attached document

<Added>

REMOVAL AND INSTALLATION <FROM THE MIDDLE OF DECEMBER, 2012>

Pre-removal and post-installation operation

- Front wheelhouse cover extension removal and installation (Refer to GROUP 42, Splash Shield).

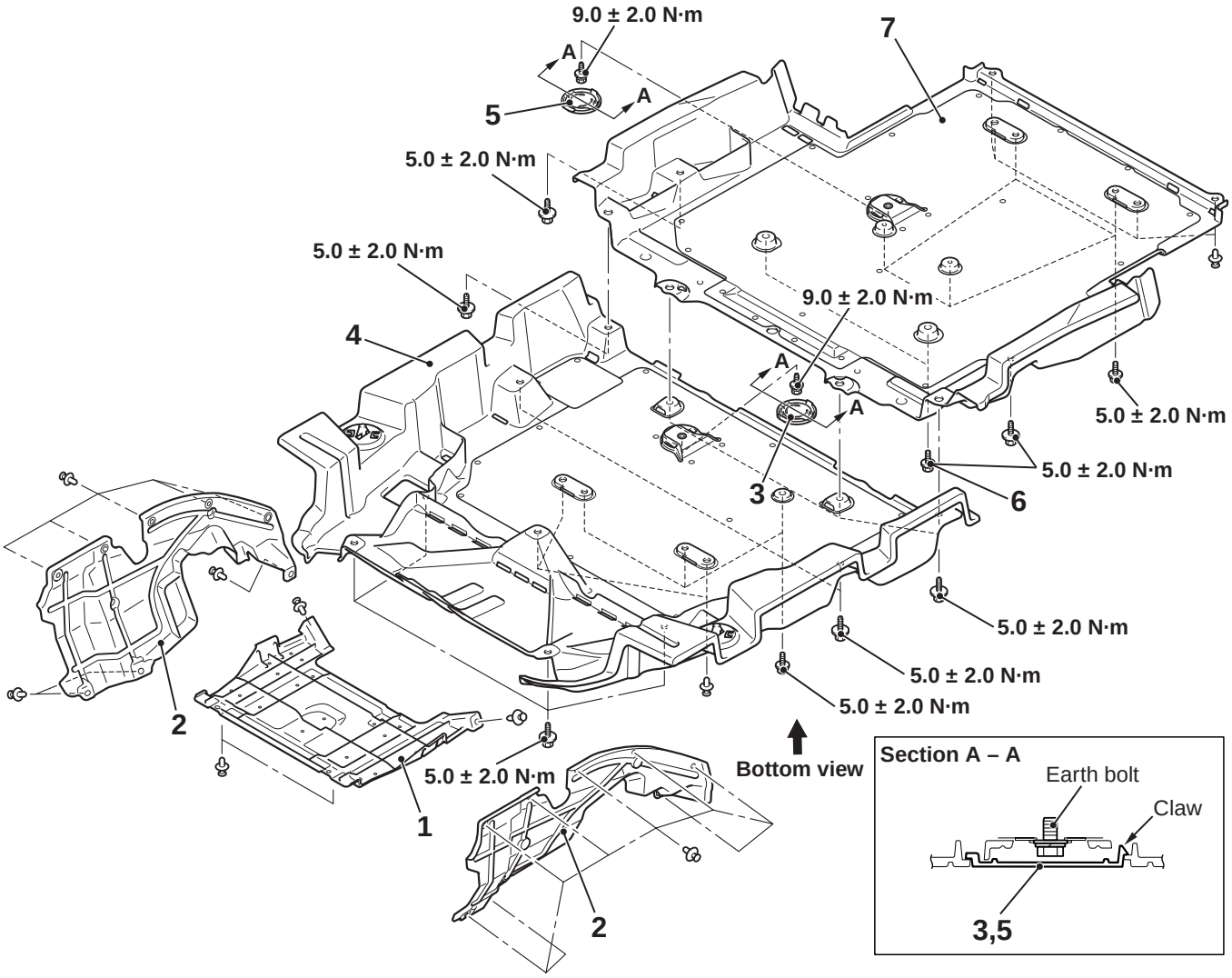

ACD00097AC

<Added>

Bottom view (The bolt and clip which are used.)

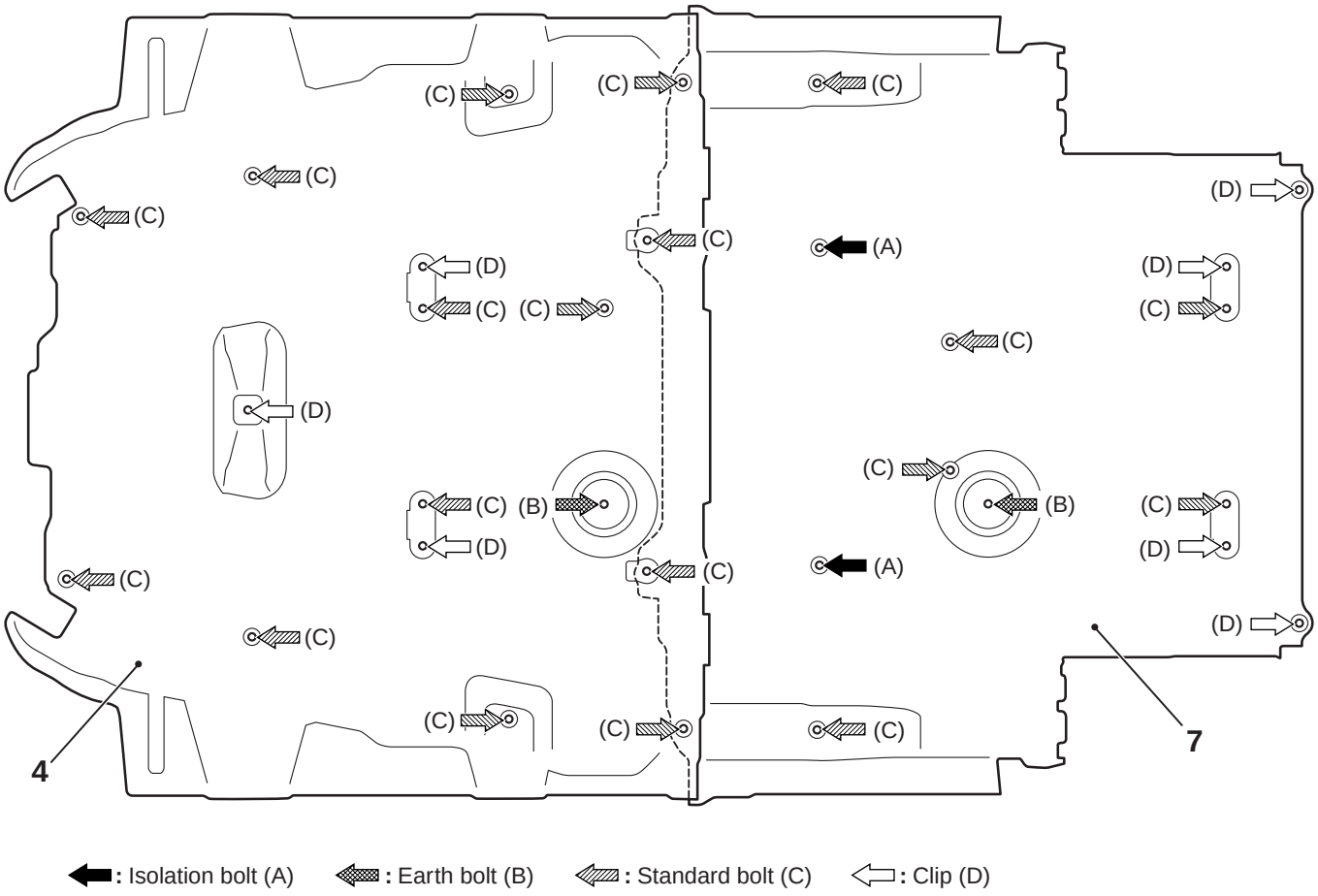

ACD00136AB

Removal steps

1. Front side member cover A
- Front tyre
2. Front wheelhouse cover
3. Floor plug

Removal steps (Continued)

4 Front floor cover A
5. Floor plug
6. Isolation bolt
7. Front floor cover B

<Added>

REMOVAL AND INSTALLATION <FROM THE MIDDLE OF DECEMBER, 2012>

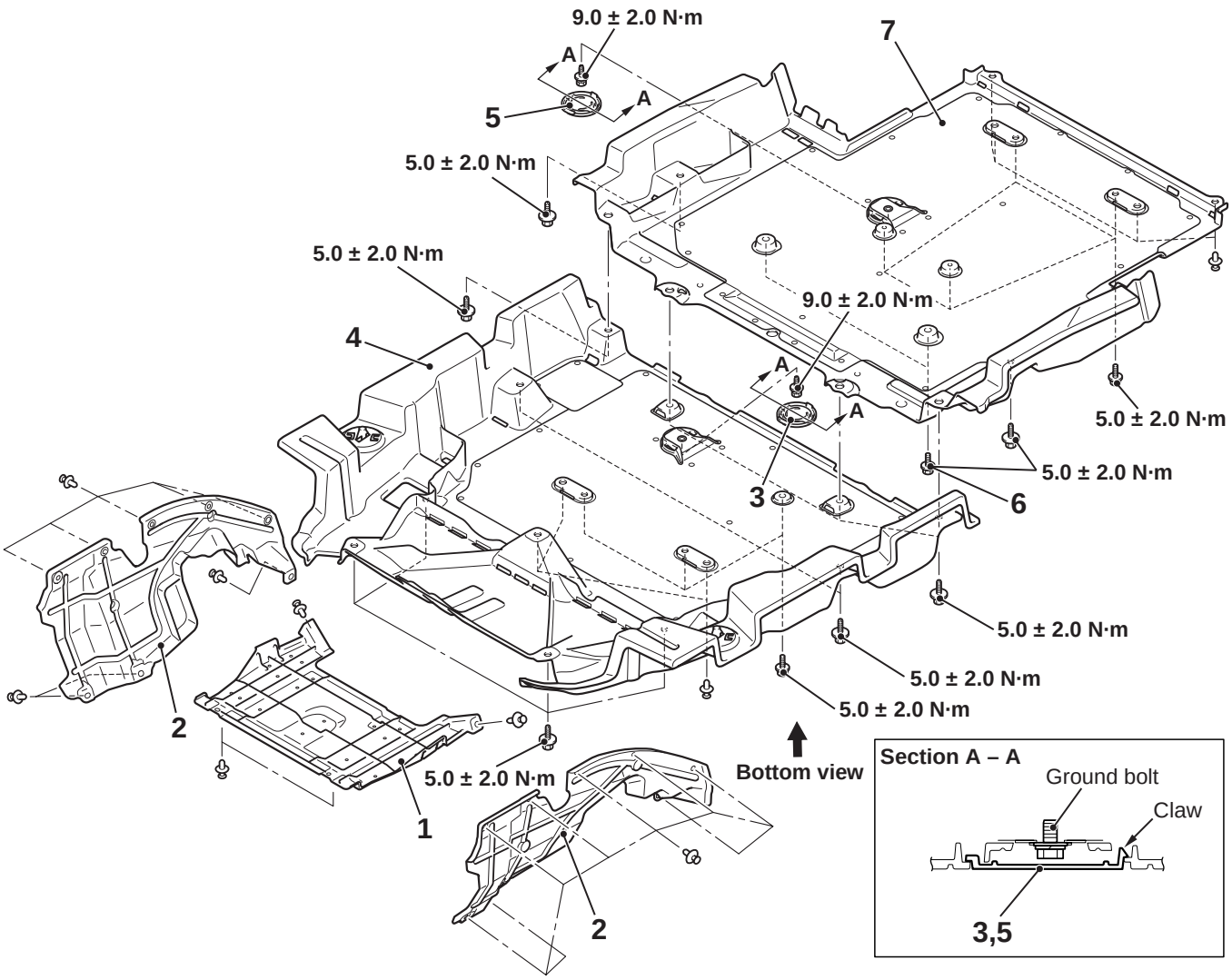

<Added>

Bottom view (The bolt and clip which are used.)

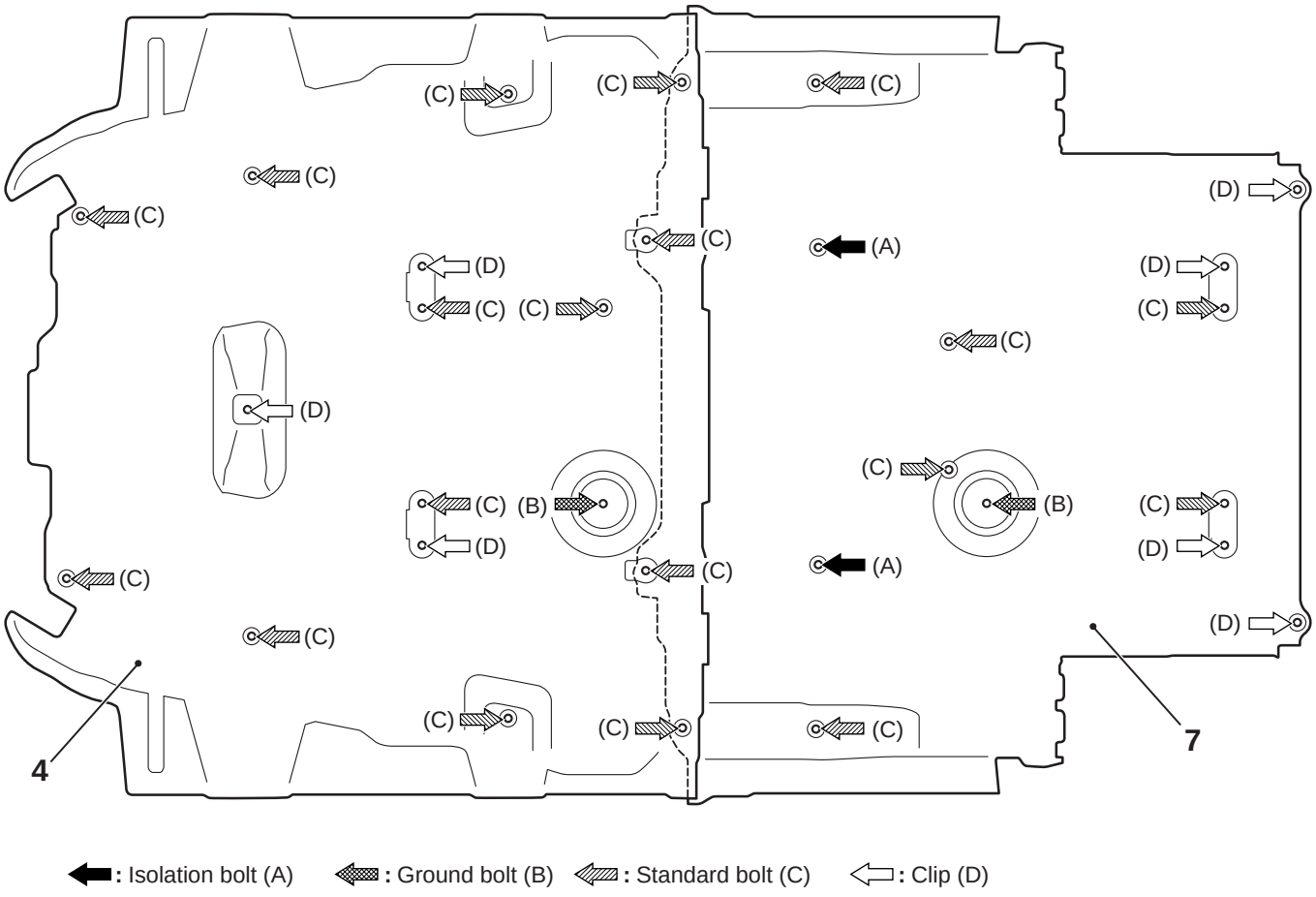

ACD00136AB

Removal steps

1. Front side member cover A
- Front tyre
2. Front wheelhouse cover
3. Floor plug

Removal steps (Continued)

4 Front floor cover A
5. Floor plug
6. Isolation bolt
7. Front floor cover B