SERVICE BULLETIN

MITSUBISHI MOTORS

GLOBAL AFTER SALES OFFICE, MITSUBISHI MOTORS CORPORATION

PURPOSE : CHANGE	ISSUE NO. : MSB-13EXML54-003	DATE : 2013-10-24
SUBJECT : Change of the troubleshooting procedure of onboard charger and DC/DC converter		<Affected Destination/Model> (As per attached) <M/Y> 13-14
GROUP : POWER UNIT AND TRACTION BATTERY(Gr:54D)		i-MiEV(HA3W)

1. Description :

Please refer to the attached document for the information about the change of mention in the applicable service manual. (Change of the troubleshooting procedure of onboard charger and DC/DC converter due to the clarification of these work)

2. Affected service manuals :

Please refer to the attached document (Attached sheet 1)

3. About the details :

Please refer to the attached document (Attached sheet 4-5)

※ Due to a lot of changes of the workshop manuals, we have attached the corrected manuals.

1) For MMNA/USTP :
2) For EUR : After P92
3) For MMNA/NZ :

〈For overseas market〉
〈EU〉

Applicable manual	Pub. No.	Applicable title (INFO ID)	Contents
2014 i-MiEV Workshop Manual	ENG: CHAE14E1-CD FRE: CHAF14E1-CD GER: CHAG14E1-CD SPA: CHAS14E1-CD ITA: CHAI14E1-CD	CODE NO. P1C00: DCDC INPUT VOLTAGE ABNORMAL (M549-55-380-01400-01)	Attached sheet 4 (1/49),(2/49)
		CODE NO. P1C02: DCDC OUTPUT VOLTAGE ABNORMAL、 CODE NO. P1C22: DCDC OUTPUT VOLTAGE ABNORMAL (2) (M549-55-390-01100-01)	Attached sheet 4 (2/49)
		CODE NO. P1C04: DCDC OUTPUT VOLTAGE REDUCTION (M549-55-400-01100-01)	Attached sheet 4 (3/49),(4/49)
		CODE NO. P1C06: DCDC IGCT VOLTAGE ABNORMAL (M549-55-420-01500-01)	Attached sheet 4 (5/49)
		CODE NO. P1C08: DCDC RECTIFIER TEMPERATURE CODE NO. P1C09: DCDC INSIDE TEMPERATURE (M549-55-430-01200-01)	Attached sheet 4 (6/49)
		CODE NO. P1C11: DCDC ROM/RAM FAIL (M549-55-440-01900-01)	Attached sheet 4 (6/49),(7/49)
		CODE NO. P1C12: DCDC EEPROM FAIL (M549-55-450-01600-01)	Attached sheet 4 (7/49)
		CODE NO. P1C13: DCDC A/D CONVERTER (M549-55-460-01300-01)	Attached sheet 4 (7/49)
		CODE NO. P1C15: DCDC OUTPUT CURRENT SENSOR FAIL (M549-55-470-01000-01)	Attached sheet 4 (7/49)
		CODE NO. P1C16: LOCAL CAN COMMUNICATION FAIL (M549-55-480-01700-01)	Attached sheet 4 (8/49)
		CODE NO. P1C19: DCDC LOW TEMPERATURE (M549-55-500-01400-01)	Attached sheet 4 (8/49)
		CODE NO. P1C21: DCDC INPUT VOLTAGE ABNORMAL (2) (M549-55-760-01200-01)	Attached sheet 4 (8/49),(9/49)
		CODE NO. P1C23: BATTERY SENSING VOLTAGE ABNORMAL (M549-55-510-01100-01)	Attached sheet 4 (9/49),(10/49)
		CODE NO. P1D00: AC INPUT VOLTAGE (LOW) CODE NO. P1D01: AC INPUT VOLTAGE (HIGH) CODE NO. P1D02: AC INPUT VOLTAGE (OVER) (M549-55-520-01800-01)	Attached sheet 4 (11/49)
		CODE NO. P1D03: AC INPUT CURRENT (HIGH) (M549-55-530-01500-01)	Attached sheet 4 (12/49)

別紙 1 (4/10)

Applicable manual	Pub. No.	Applicable title (INFO ID)	Contents
		CODE NO. P1D06: OUTPUT VOLTAGE (HIGH) (M549-55-540-01200-01)	sheet 4 (12/49)
2014 i-MiEV Workshop Manual	ENG: CHAE14E1-CD FRE: CHAF14E1-CD GER: CHAG14E1-CD SPA: CHAS14E1-CD ITA: CHAI14E1-CD	CODE NO. P1D07: OUTPUT VOLTAGE (OVER) (M549-55-740-01800-01)	Attached sheet 4 (13/49)
		CODE NO. P1D08: LOAD CONNECTION ABNORMAL (M549-55-550-01900-01)	Attached sheet 4 (14/49),(15/49)
		CODE NO. P1D09: OUTPUT CURRENT (HIGH) CODE NO. P1D10: OUTPUT CURRENT (CONTROL FAIL) (M549-55-560-01600-01)	Attached sheet 4 (15/49)
		CODE NO. P1D11: OUTPUT CURRENT (OVER) (M549-55-750-01500-01)	Attached sheet 4 (16/49)
		CODE NO. P1D13: IGCG VOLTAGE ABNORMAL (M549-55-570-01300-01)	Attached sheet 4 (17/49)
		CODE NO. P1D14: VOLTAGE COMMAND ABNORMAL (M549-55-580-01000-01)	Attached sheet 4 (17/49)
		CODE NO. P1D15: CURRENT COMMAND ABNORMAL (M549-55-590-01700-01)	Attached sheet 4 (18/49)
		CODE NO. P1D16: PILOT SIGNAL (CHARGE NOT ALLOWED) CODE NO. P1D17: PILOT SIGNAL (COMMUNICATION) CODE NO. P1D18: PILOT SIGNAL FREQUENCY ABNORMAL CODE NO. P1D43: PILOT SIGNAL VOLTAGE (M549-55-600-01700-01)	Attached sheet 4 (18/49), (19/49), (21/49)
		CODE NO. P1D23: POWER CIRCUIT (PRE-CHARGE FAIL) (M549-55-610-01400-01)	Attached sheet 4 (21/49)
		CODE NO. P1D25: INVERTER OUTPUT CURRENT (M549-55-620-01100-01)	Attached sheet 4 (21/49)
		CODE NO. P1D26: INTERMAL TEMPERATURE CODE NO. P1D27: PFC TEMPERATURE CODE NO. P1D40: RECTIFIER COIL TEMPERATURE CODE NO. P1D43: INPUT DIODE TEMPERATURE (M549-55-630-01800-01)	Attached sheet 4 (22/49)
		CODE NO. P1D31: ROM/RAM FAIL (M549-55-640-01500-01)	Attached sheet 4 (23/49)
		CODE NO. P1D32: EEPROM FAIL (M549-55-650-01200-01)	Attached sheet 4 (23/49)
		CODE NO. P1D33: AD CONVERTER ABNORMAL (M549-55-660-01900-01)	Attached sheet 4 (23/49)

Applicable manual	Pub. No.	Applicable title (INFO ID)	Contents
			別紙 1 (5/10)
2014 i-MiEV Workshop Manual	ENG: CHAE14E1-CD FRE: CHAF14E1-CD GER: CHAG14E1-CD SPA: CHAS14E1-CD ITA: CHAI14E1-CD	CODE NO. P1D34: INPUT CURRENT SENSOR FAIL CODE NO. P1D35: OUTPUT CURRENT SENSOR FAIL (M549-55-670-01600-01)	Attached sheet 4 (24/49)
		CODE NO. P1D37: AC POWER SUPPLY/ AC INPUT FUSE 1 CODE NO. P1D44: POWER SUPPLY EQUIPMENT ABNORMAL (M549-55-680-01300-01)	Attached sheet 4 (24/49)
		CODE NO. P1D42: TEMPERATURE SENSOR (M549-55-690-01000-01)	Attached sheet 4 (24/49)
		CODE NO. P1D45: FAILURE DETECTION CIRCUIT (M549-55-700-01000-01)	Attached sheet 4 (25/49)
		CODE NO. U1100: EV ECU CAN TIMEOUT (1) (M549-55-710-01700-01)	Attached sheet 4 (25/49)
		INSPECTION CHART FOR TROUBLE SYMPTOMS (M549-50-080-06500-01)	Attached sheet 4 (26/49)～(29/49)
		INSPECTION PROCEDURE 2: CHARGE WARNING LAMP OF AUXILIARY BATTERY LIT IN READY STATUS (M549-50-180-06800-01)	Attached sheet 4 (30/49)
		INSPECTION PROCEDURE 3: ALTHOUGH REGULAR CHARGING IS POSSIBLE, READY INDICATOR AND CHARGE INDICATOR ARE NOT LIT (M549-55-310-04800-01)	Attached sheet 4 (31/49),(32/49)
		INSPECTION PROCEDURE 4: READY INDICATOR IS NOT LIT (REGULAR CHARGING IS IMPOSSIBLE) (M549-55-320-04500-01)	Attached sheet 4 (33/49),(34/49)
		INSPECTION PROCEDURE 5: ALTHOUGH READY INDICATOR IS LIT, CHARGE INDICATOR IS NOT LIT (REGULAR CHARGING IS IMPOSSIBLE) (M549-55-330-04200-01)	Attached sheet 4 (35/49),(36/49)
		INSPECTION PROCEDURE 6: ALTHOUGH READY INDICATOR AND CHARGE INDICATOR ARE LIT, REGULAR CHARGING IS IMPOSSIBLE (M549-55-340-05000-01)	Attached sheet 4 (37/49),(38/49)
		INSPECTION PROCEDURE 7: FAULT INDICATOR IS LIT (M549-55-350-01300-01)	Attached sheet 4 (39/49)
		INSPECTION PROCEDURE 8: FAULT INDICATOR BLINKS (M549-55-360-05400-01)	Attached sheet 4 (40/49),(41/49)
		INSPECTION PROCEDURE 9: READY INDICATOR BLINKS (M549-50-320-01700-01)	Attached sheet 4 (42/49),(43/49)

Applicable manual	Pub. No.	Applicable title (INFO ID)	Contents
		INSPECTION PROCEDURE 9: READY INDICATOR BLINKS after (M549-50-320-01700-01)	Attached sheet 4 (44/49),(45/49)
2014 i-MiEV Workshop Manual	ENG: CHAE14E1-CD FRE: CHAF14E1-CD GER: CHAG14E1-CD SPA: CHAS14E1-CD ITA: CHAI14E1-CD	DATA LIST REFERENCE TABLE (M549-50-100-01700-01)	Attached sheet 4 (46/49)
		CHARGING CABLE CHACK (M549-55-300-05200-01)	Attached sheet 4 (47/49)～(49/49)

<MMAL/NZ>

Applicable manual	Pub. No.	Applicable title (INFO ID)	Contents
2013.5 i-MiEV Workshop Manual CD-ROM	AU900414 NZ:DRAFT	CODE NO. P1C00: DCDC INPUT VOLTAGE ABNORMAL (M549-55-380-02500-01)	Attached sheet 4 (1/49),(2/49)
		CODE NO. P1C02: DCDC OUTPUT VOLTAGE ABNORMAL、CODE NO. P1C22: DCDC OUTPUT VOLTAGE ABNORMAL (2) (M549-55-390-02200-01)	Attached sheet 4 (2/49)
		CODE NO. P1C04: DCDC OUTPUT VOLTAGE REDUCTION (M549-55-400-02200-01)	Attached sheet 4 (3/49),(4/49)
		CODE NO. P1C06: DCDC IGCT VOLTAGE ABNORMAL (M549-55-420-02600-01)	Attached sheet 4 (5/49)
		CODE NO. P1C08: DCDC RECTIFIER TEMPERATURE CODE NO. P1C09: DCDC INSIDE TEMPERATURE (M549-55-430-02300-01)	Attached sheet 4 (6/49)
		CODE NO. P1C11: DCDC ROM/RAM FAIL (M549-55-440-02000-01)	Attached sheet 4 (6/49),(7/49)
		CODE NO. P1C12: DCDC EEPROM FAIL (M549-55-450-02700-01)	Attached sheet 4 (7/49)
		CODE NO. P1C13: DCDC A/D CONVERTER (M549-55-460-02400-01)	Attached sheet 4 (7/49)
		CODE NO. P1C15: DCDC OUTPUT CURRENT SENSOR FAIL (M549-55-470-02100-01)	Attached sheet 4 (7/49)
		CODE NO. P1C16: LOCAL CAN COMMUNICATION FAIL (M549-55-480-02800-01)	Attached sheet 4 (8/49)
		CODE NO. P1C19: DCDC LOW TEMPERATURE (M549-55-500-02500-01)	Attached sheet 4 (8/49)
		CODE NO. P1C21: DCDC INPUT VOLTAGE ABNORMAL (2) (M549-55-760-02300-01)	Attached sheet 4 (8/49),(9/49)
		CODE NO. P1C23: BATTERY SENSING VOLTAGE ABNORMAL	Attached sheet 4

Applicable manual	Pub. No.	Applicable title (INFO ID)	
		(M549-55-510-02200-01)	(9/49),(10/49)
2013.5 i-MiEV Workshop Manual CD-ROM	AU900414 NZ:DRAFT	CODE NO. P1D00: AC INPUT VOLTAGE (LOW) CODE NO. P1D01: AC INPUT VOLTAGE (HIGH) CODE NO. P1D02: AC INPUT VOLTAGE (OVER) (M549-55-520-02900-01)	Attached sheet 4 (11/49)
		CODE NO. P1D03: AC INPUT CURRENT (HIGH) (M549-55-530-02600-01)	Attached sheet 4 (12/49)
		CODE NO. P1D06: OUTPUT VOLTAGE (HIGH) (M549-55-540-02300-01)	Attached sheet 4 (12/49)
		CODE NO. P1D07: OUTPUT VOLTAGE (OVER) (M549-55-740-02900-01)	Attached sheet 4 (13/49)
		CODE NO. P1D08: LOAD CONNECTION ABNORMAL (M549-55-550-02000-01)	Attached sheet 4 (14/49),(15/49)
		CODE NO. P1D09: OUTPUT CURRENT (HIGH) CODE NO. P1D10: OUTPUT CURRENT (CONTROL FAIL) (M549-55-560-02700-01)	Attached sheet 4 (15/49)
		CODE NO. P1D11: OUTPUT CURRENT (OVER) (M549-55-750-02600-01)	Attached sheet 4 (16/49)
		CODE NO. P1D13: IGCG VOLTAGE ABNORMAL (M549-55-570-02400-01)	Attached sheet 4 (17/49)
		CODE NO. P1D14: VOLTAGE COMMAND ABNORMAL (M549-55-580-02100-01)	Attached sheet 4 (17/49)
		CODE NO. P1D15: CURRENT COMMAND ABNORMAL (M549-55-590-02800-01)	Attached sheet 4 (18/49)
		CODE NO. P1D16: PILOT SIGNAL (CHARGE NOT ALLOWED) CODE NO. P1D17: PILOT SIGNAL (COMMUNICATION) CODE NO. P1D18: PILOT SIGNAL FREQUENCY ABNORMAL CODE NO. P1D43: PILOT SIGNAL VOLTAGE (M549-55-600-02800-01)	Attached sheet 4 (18/49), (20/49), (21/49)
		CODE NO. P1D23: POWER CIRCUIT (PRE-CHARGE FAIL) (M549-55-610-02500-01)	Attached sheet 4 (21/49)
		CODE NO. P1D25: INVERTER OUTPUT CURRENT (M549-55-620-02200-01)	Attached sheet 4 (21/49)
		CODE NO. P1D26: INTERMAL TEMPERATURE CODE NO. P1D27: PFC TEMPERATURE CODE NO. P1D40: RECTIFIER COIL TEMPERATURE CODE NO. P1D43: INPUT DIODE TEMPERATURE	Attached sheet 4 (22/49)

Applicable manual	Pub. No.	Applicable title (INFO ID)	
		(M549-55-630-02900-01)	
2013.5 i-MiEV Workshop Manual CD-ROM	AU900414 NZ:DRAFT	CODE NO. P1D31: ROM/RAM FAIL (M549-55-640-02600-01)	Attached sheet 4 (23/49)
		CODE NO. P1D32: EEPROM FAIL (M549-55-650-02300-01)	Attached sheet 4 (23/49)
		CODE NO. P1D33: AD CONVERTER ABNORMAL (M549-55-660-02000-01)	Attached sheet 4 (23/49)
		CODE NO. P1D34: INPUT CURRENT SENSOR FAIL CODE NO. P1D35: OUTPUT CURRENT SENSOR FAIL (M549-55-670-02700-01)	Attached sheet 4 (24/49)
		CODE NO. P1D37: AC POWER SUPPLY/ AC INPUT FUSE 1 CODE NO. P1D44: POWER SUPPLY EQUIPMENT ABNORMAL (M549-55-680-02400-01)	Attached sheet 4 (24/49)
		CODE NO. P1D42: TEMPERATURE SENSOR (M549-55-690-02100-01)	Attached sheet 4 (24/49)
		CODE NO. P1D45: FAILURE DETECTION CIRCUIT (M549-55-700-02100-01)	Attached sheet 4 (25/49)
		CODE NO. U1100: EV ECU CAN TIMEOUT (1) (M549-55-710-02800-01)	Attached sheet 4 (25/49)
		INSPECTION PROCEDURE 2: CHARGE WARNING LAMP OF AUXILIARY BATTERY LIT IN READY STATUS (M549-50-180-07900-01)	Attached sheet 4 (30/49)

<MMSA>

Applicable manual	Pub. No.	Applicable title (INFO ID)	Contents
2013 i-MiEV Service Manual CD-ROM	MSCD-018B-2013	CODE NO. P1C00: DCDC INPUT VOLTAGE ABNORMAL (M549-55-380-01400-01)	Attached sheet 5 (1/33)
		CODE NO. P1C02: DCDC OUTPUT VOLTAGE ABNORMAL、 CODE NO. P1C22: DCDC OUTPUT VOLTAGE ABNORMAL (2) (M549-55-390-01100-01)	Attached sheet 5 (2/33)
		CODE NO. P1C04: DCDC OUTPUT VOLTAGE REDUCTION (M549-55-400-01100-01)	Attached sheet 5 (3/33),(4/33)
		CODE NO. P1C06: DCDC IGCT VOLTAGE ABNORMAL (M549-55-420-01500-01)	Attached sheet 5 (5/33)
		CODE NO. P1C08: DCDC RECTIFIER TEMPERATURE CODE NO. P1C09: DCDC INSIDE TEMPERATURE (M549-55-430-01200-01)	Attached sheet 5 (6/33)
		CODE NO. P1C11: DCDC ROM/RAM FAIL	Attached

Applicable manual	Pub. No.	Applicable title (INFO ID)	
		(M549-55-440-01900-01)	sheet 5 (7/33)
2013 i-MiEV Service Manual CD-ROM	MSCD-018B-2013	CODE NO. P1C12: DCDC EEPROM FAIL (M549-55-450-01600-01)	Attached sheet 5 (7/33)
		CODE NO. P1C13: DCDC A/D CONVERTER (M549-55-460-01300-01)	Attached sheet 5 (8/33)
		CODE NO. P1C15: DCDC OUTPUT CURRENT SENSOR FAIL (M549-55-470-01000-01)	Attached sheet 5 (8/33)
		CODE NO. P1C16: LOCAL CAN COMMUNICATION FAIL (M549-55-480-01700-01)	Attached sheet 5 (9/33)
		CODE NO. P1C19: DCDC LOW TEMPERATURE (M549-55-500-01400-01)	Attached sheet 5 (9/33)
		CODE NO. P1C21: DCDC INPUT VOLTAGE ABNORMAL (2) (M549-55-760-01200-01)	Attached sheet 5 (10/33)
		CODE NO. P1C23: BATTERY SENSING VOLTAGE ABNORMAL (M549-55-510-01100-01)	Attached sheet 5 (11/33),(12/33)
		CODE NO. P1D00: AC INPUT VOLTAGE (LOW) CODE NO. P1D01: AC INPUT VOLTAGE (HIGH) CODE NO. P1D02: AC INPUT VOLTAGE (OVER) (M549-55-520-01800-01)	Attached sheet 5 (13/33)
		CODE NO. P1D03: AC INPUT CURRENT (HIGH) (M549-55-530-01500-01)	Attached sheet 5 (14/33)
		CODE NO. P1D06: OUTPUT VOLTAGE (HIGH) (M549-55-540-01200-01)	Attached sheet 5 (15/33)
		CODE NO. P1D07: OUTPUT VOLTAGE (OVER) (M549-55-740-01800-01)	Attached sheet 5 (15/33)
		CODE NO. P1D08: LOAD CONNECTION ABNORMAL (M549-55-550-01900-01)	Attached sheet 5 (16/33),(17/33)
		CODE NO. P1D09: OUTPUT CURRENT (HIGH) CODE NO. P1D10: OUTPUT CURRENT (CONTROL FAIL) (M549-55-560-01600-01)	Attached sheet 5 (18/33)
		CODE NO. P1D11: OUTPUT CURRENT (OVER) (M549-55-750-01500-01)	Attached sheet 5 (19/33)
		CODE NO. P1D13: IGCG VOLTAGE ABNORMAL (M549-55-570-01300-01)	Attached sheet 5 (20/33)
		CODE NO. P1D14: VOLTAGE COMMAND ABNORMAL (M549-55-580-01000-01)	Attached sheet 5 (21/33)
		CODE NO. P1D15: CURRENT COMMAND ABNORMAL	Attached sheet 5

Applicable manual	Pub. No.	Applicable title (INFO ID)	Contents
		(M549-55-590-01700-01)	(22/33)
2013 i-MiEV Service Manual CD-ROM	MSCD-018B-2013	CODE NO. P1D16: PILOT SIGNAL (CHARGE NOT ALLOWED) CODE NO. P1D17: PILOT SIGNAL (COMMUNICATION) CODE NO. P1D18: PILOT SIGNAL FREQUENCY ABNORMAL CODE NO. P1D43: PILOT SIGNAL VOLTAGE (M549-55-600-01700-01)	Attached sheet 5 (23/33),(24/33)
		CODE NO. P1D23: POWER CIRCUIT (PRE-CHARGE FAIL) (M549-55-610-01400-01)	Attached sheet 5 (25/33)
		CODE NO. P1D25: INVERTER OUTPUT CURRENT (M549-55-620-01100-01)	Attached sheet 5 (25/33)
		CODE NO. P1D26: INTERMAL TEMPERATURE CODE NO. P1D27: PFC TEMPERATURE CODE NO. P1D40: RECTIFIER COIL TEMPERATURE CODE NO. P1D43: INPUT DIODE TEMPERATURE (M549-55-630-01800-01)	Attached sheet 5 (26/33),(27/33)
		CODE NO. P1D31: ROM/RAM FAIL (M549-55-640-01500-01)	Attached sheet 5 (27/33)
		CODE NO. P1D32: EEPROM FAIL (M549-55-650-01200-01)	Attached sheet 5 (28/33)
		CODE NO. P1D33: AD CONVERTER ABNORMAL (M549-55-660-01900-01)	Attached sheet 5 (28/33)
		CODE NO. P1D34: INPUT CURRENT SENSOR FAIL CODE NO. P1D35: OUTPUT CURRENT SENSOR FAIL (M549-55-670-01600-01)	Attached sheet 5 (29/33)
		CODE NO. P1D37: AC POWER SUPPLY/ AC INPUT FUSE 1 CODE NO. P1D44: POWER SUPPLY EQUIPMENT ABNORMAL (M549-55-680-01300-01)	Attached sheet 5 (29/33),(30/33)
		CODE NO. P1D42: TEMPERATURE SENSOR (M549-55-690-01000-01)	Attached sheet 5 (30/33)
		CODE NO. P1D45: FAILURE DETECTION CIRCUIT (M549-55-700-01000-01)	Attached sheet 5 (31/33)
		CODE NO. U1100: EV ECU CAN TIMEOUT (1) (M549-55-710-01700-01)	Attached sheet 5 (31/33),(32/33)
		INSPECTION PROCEDURE 2: CHARGE WARNING LIGHT OF 12V STARTER BATTERY LIT IN READY STATUS (M549-50-180-06800-01)	Attached sheet 5 (33/33)

・Auxiliary battery is failed.
・High voltage system component of except DC-DC converter is failed.

Attached sheet 4 (1/49)

<Added>

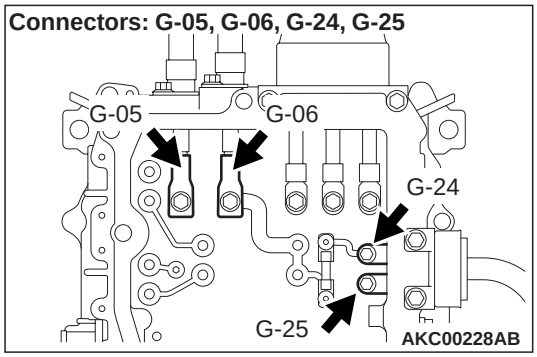

TROUBLE JUDGEMENT

Check Conditions

- The EV-ECU allows the DC-DC converter to operate.

Judgement Criterion

- The input voltage is less than 180 V or more than 420 V.

FAIL-SAFE AND BACKUP FUNCTION

- The output of DC-DC converter is stopped.

PROBABLE CAUSES

- Fuse meltdown between DC-DC converter and inverter
- Open circuits or damage of high voltage circuits between DC-DC converter and traction battery; or poor contact of connector
- The DC-DC converter is failed.

<Old>

DIAGNOSIS PROCEDURE

⚠ *DANGER*

When high voltage system components are served, be sure to pull service plugs to shut down high voltage (Refer to).

⚠ *DANGER*

When pulling service plugs, wear the specified protective equipment (Refer to).

<Old>

STEP 1. M.U.T.-III other system diagnosis code.

Q: Is the diagnosis code of EV-ECU system set?
YES : Check EV-ECU system (Refer to).
NO : Go to Step 2.

<New>

STEP 4. Check harness between G-24 inverter (+ terminal) connector, G-25 inverter (- terminal) and inverter and on board charger/DC-DC converter connector
・Check power supply line for open circuit and damage.
Q: Is the check result normal?
YES: Go to Step 5.
NO: Repair or replace the inverter and on board charger/ DC-DC converter.

STEP 2. Continuity check on fuse between DC-DC converter and inverter

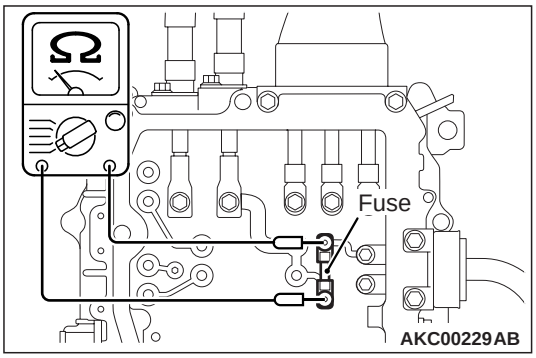

⚠ *DANGER*

When high voltage system components are served, be sure to pull service plugs to shut down high voltage before serving (Refer to).

⚠ *DANGER*

When pulling service plugs, wear the specified protective equipment (Refer to).

<New>

- Check continuity of fuse both ends.

OK: Continuity

Q: Is the check result normal?
YES : Go to Step 3.
NO : Replace the fuse.

STEP 3. Connector check:
G-24 inverter (+ terminal),
G-25 inverter (- terminal),
G-06 inverter (+ terminal),
G-05 inverter (- terminal)
connector

~~**STEP 3. Connector check: G-24 inverter and on board charger/DC-DC converter combination (+ terminal) connector, G-25 inverter and on board charger/DC-DC converter combination (– terminal) connector, G-05 inverter (– terminal) connector, G-06 inverter (+ terminal) connector**~~

Q: Is the check result normal?
YES : Go to Step 4.
NO : Repair.

~~**STEP 4. Check harness between G-24 (terminal No. 1) inverter and on board charger/DC-DC converter combination (+ terminal) connector and G-06 (terminal No. 1) inverter (+ terminal) connector**~~

~~- Check power supply line for open circuit and damage.~~

~~**Q: Is the check result normal?**~~
~~**YES :** Go to Step 5.~~
~~**NO :** Repair.~~

Attached sheet 4 (2/49)

<Old>

STEP 5. Check harness between G-25 (terminal No. 1) inverter and on board charger/DC-DC converter combination (– terminal) connector and G-05 (terminal No. 1) inverter (– terminal) connector

- Check power supply line for open circuit and damage.

Q: Is the check result normal?
YES : Go to Step 6.
NO : Repair.

<Old>

STEP 6. M.U.T.-III diagnosis code

Q: Is the diagnosis code set?
YES : Replace the on board charger/DC-DC converter.
NO : Intermittent malfunction (Refer to GROUP 00 – How to Use Troubleshooting/ Inspection Service Points – How to Cope with Intermittent Malfunctions).

<New>

STEP 6. Diagnosis code recheck
Check again if the diagnosis code is set to the DC-DC converter.
(1)Erase the stored diagnosis code.
(2)Set the electric motor switch from the "LOCK" (OFF) position to the "ON", and then to the "START" position temporarily.
(3)Check if the diagnosis code is set.

Code No. P1C02: DCDC Output Voltage Abnormal
Code No. P1C22: DCDC Output Voltage Abnormal (2)

TROUBLE JUDGEMENT

Check Conditions

- The EV-ECU allows the DC-DC converter to operate.

Judgement Criterion

- The output (B terminal) voltage is more than 16.0 V. <P1C02>
- The system detects a failure "overvoltage abnormal detection circuit" in the output section by predetermined times or more.<P1C22>

FAIL-SAFE AND BACKUP FUNCTION

- The output of DC-DC converter is stopped.

PROBABLE CAUSE

- The DC-DC converter is failed.

DIAGNOSIS PROCEDURE

<Old>

STEP 1. M.U.T.-III diagnosis code

Q: Is the diagnosis code set?
YES : Replace the on board charger/DC-DC converter.
NO : Intermittent malfunction (Refer to GROUP 00 – How to Use Troubleshooting/ Inspection Service Points – How to Cope with Intermittent Malfunctions).

<New>

STEP 1. Diagnosis code recheck
Check again if the diagnosis code is set to the DC-DC converter.
(1)Erase the stored diagnosis code.
(2)Set the electric motor switch from the "LOCK" (OFF) position to the "ON", and then to the "START" position temporarily.
(3)Check if the diagnosis code is set.

<New>

STEP 5. Check harness between G-06 inverter (+ terminal) connector, G-05 inverter (- terminal) and G-19 traction battery (+ terminal) connector, G-18 traction battery (- terminal) connector
・Check power supply line for open circuit and damage.
Q: Is the check result normal?
YES: Go to Step 5.
NO: Repair or replace the traction battery cable.

Code No. P1C04: DCDC Output Voltage Reduction

<Added>

STEP 1. Check auxiliary battery
・Check auxiliary battery (Refer to GROUP 54A - Auxiliary Battery - On-vehicle Service - Battery Test)

Q: Is the check result normal?
YES: Go to Step 2.
NO: Replace the auxiliary battery.

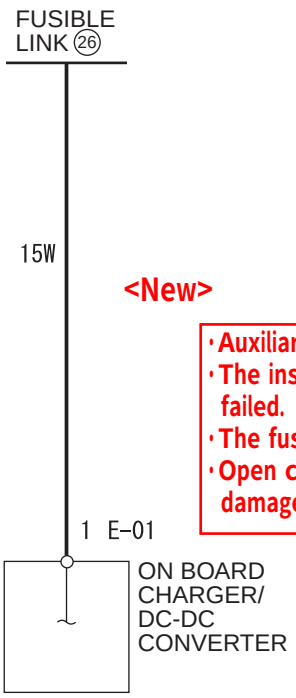

<New>

・Auxiliary battery is failed
・The installation of the auxiliary battery terminal is failed.
・The fusible link is fused.
・Open circuits of output (B terminal) voltage, damage or poor contact of connector

Wire colour code
B : Black LG : Light green G : Green L : Blue W : White Y : Yellow SB : Sky blue
BR : Brown O : Orange GR : Grey R : Red P : Pink V : Violet PU : Purple SI : Silver

AKC00216

Connector: E-01

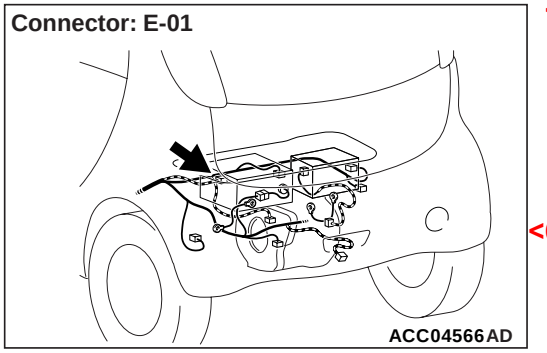

<Old>

PROBABLE CAUSES

- ~~Damaged wiring harness or connector(s)~~
- The DC-DC converter is failed.

DIAGNOSIS PROCEDURE

<Old>

~~STEP 1.~~ **Connector check: E-01 on board charger/DC-DC converter connecter, fusible link (No. 26)**
Check the terminals for deformation, looseness, etc.

<Old>

Q: Is the check result normal?
YES : Go to ~~Step 2.~~ <New> Step 3
NO : Repair the damaged connector.

<Old>

~~STEP 2.~~ **Check the wiring harness between E-01 on board charger/DC-DC converter connector terminal No. 1 and the fusible link (No. 26).**
Check the power supply line for open, short circuit and damage.

<Old>

Q: Is the check result normal?
YES : Go to ~~Step 3.~~ <New> Step 4
NO : Repair the wiring harness.

TROUBLE JUDGEMENT

<New> STEP 2.

Check Conditions

- The EV-ECU allows the DC-DC converter to operate.

Judgement Criterion

<New> STEP 3.

- The output (B terminal) voltage is less than 11.0 V.

FAIL-SAFE AND BACKUP FUNCTION

- The output of DC-DC converter is restricted.

Attached sheet 4 (4/49)

<Old>

~~STEP 3. M.U.T.-III diagnosis code~~

Q: Is the diagnosis code set?

<New>

STEP 4. Diagnosis code recheck
Check again if the diagnosis code is set to the DC-DC converter.
(1)Erase the stored diagnosis code.
(2)Set the electric motor switch from the "LOCK" (OFF) position to the "ON", and then to the "START" position temporarily.
(3)Check if the diagnosis code is set.

YES : Replace the on board charger/DC-DC converter.

NO : Intermittent malfunction (Refer to GROUP 00 – How to Use Troubleshooting/ Inspection Service Points – How to Cope with Intermittent Malfunctions).

Attached sheet 4 (5/49)

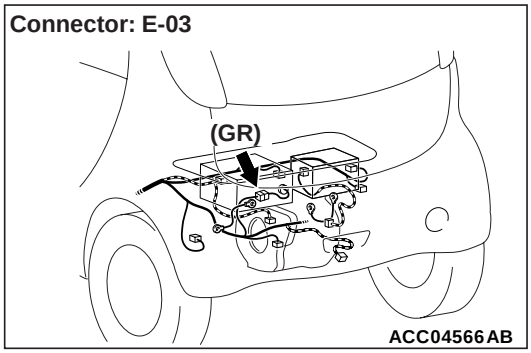

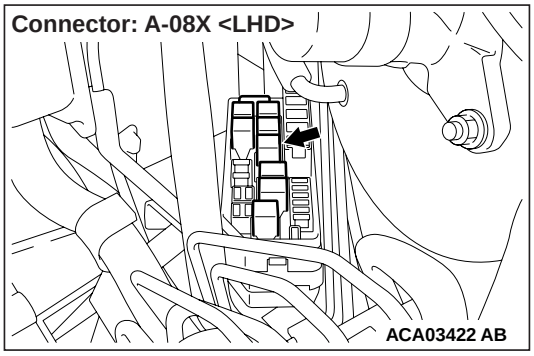

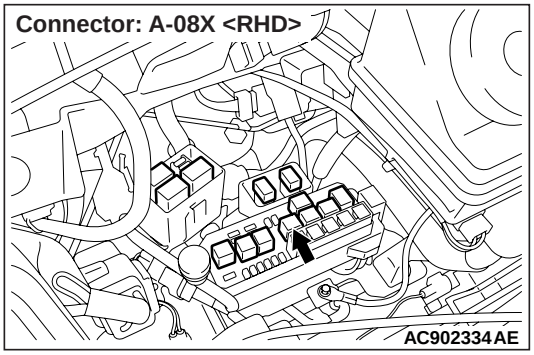

TROUBLE JUDGEMENT

Check Condition

- The EV-ECU is activated.

Judgement Criterion

- The DC-DC converter control power supply voltage is less than 7.2 V.

or

- The DC-DC converter control power supply voltage is more than 17.6 V.

FAIL-SAFE AND BACKUP FUNCTION

- The output of DC-DC converter is stopped.

PROBABLE CAUSES

- 24 V auxiliary battery incorrect connection by user
- The installation of the auxiliary battery terminal is failed.
- The EV control relay is failed.
- Open circuits of DC-DC converter power supply, short circuits to earth or damage; poor contact of connector
- The DC-DC converter is failed.

DIAGNOSIS PROCEDURE

STEP 1. Check auxiliary battery

- Check auxiliary battery (Refer to GROUP 54A – Auxiliary Battery – On-vehicle Service – Battery Test).

Q: Is the check result normal?
YES : Go to Step 2.
NO : Replace the auxiliary battery.

STEP 2. M.U.T.-III other system diagnosis code.

Q: Is diagnosis code of EV-ECU system set?
YES : Check EV-ECU system.
NO : Go to Step 3.

STEP 3. Connector check: E-03 on board charger/DC-DC converter connecter, A-08X EV control relay (relay box) connecter

Q: Is the check result normal?
YES : Go to Step 4.
NO : Repair the damaged connector. Correct or replace the relay box.

STEP 4. Check the wiring harness between A-08X EV control relay (relay box) connector terminal No. 1 and E-03 on board charger/DC-DC converter connector terminal No. 8.
Check the power supply line for open, short circuit and damage.

Q: Is the check result normal?
YES : Go to Step 5.
NO : Repair the wiring harness.

<Old>

~~**STEP 5. M.U.T.-III diagnosis code**~~

Q: Is the diagnosis code set?
YES : Replace the on board charger/DC-DC converter.
NO : Intermittent malfunction (Refer to GROUP 00 – How to Use Troubleshooting/ Inspection Service Points – How to Cope with Intermittent Malfunctions).

<New>

STEP 5. Diagnosis code recheck
Check again if the diagnosis code is set to the DC-DC converter.
(1)Erase the stored diagnosis code.
(2)Set the electric motor switch from the "LOCK" (OFF) position to the "ON", and then to the "START" position temporarily.
(3)Check if the diagnosis code is set.

Code No. P1C08: DCDC Rectifier Temperature
Code No. P1C09: DCDC Inside Temperature

TROUBLE JUDGEMENT

Check Conditions
- The EV-ECU allows the DC-DC converter to operate.

Judgement Criterion
- The rectification area temperature sensor is more than 105° C. <P1C08>
- The temperature sensor in the DC-DC converter is more than 105°C. <P1C09>

FAIL-SAFE AND BACKUP FUNCTION
- The output of DC-DC converter is stopped.

PROBABLE CAUSES
- There is not enough coolant.
- The water pump is failed.
- The radiator fan is failed.
- The temperature sensor installed in the DC-DC converter is failed.
- EV-ECU is failed.

DIAGNOSIS PROCEDURE

STEP 1. M.U.T.-III other system diagnosis code.

Q: Is diagnosis code of EV-ECU system set? <Old>
YES : Check EV-ECU system.
NO : Go to Step 2.

<New>
STEP 4. Diagnosis code recheck
Check again if the diagnosis code is set to the DC-DC converter.
(1)Erase the stored diagnosis code.
(2)Set the electric motor switch from the "LOCK" (OFF) position to the "ON", and then to the "START" position temporarily.
(3)Check if the diagnosis code is set.

STEP 2. Check the coolant.

NOTE: If the coolant largely decreases, check whether the coolant leakage exists or not. Repair it if necessary.
- Check on coolant (Refer to GROUP 14 – On-vehicle Service – Coolant Check).

Q: Is the check result normal?
YES : Go to Step 3.
NO : Replace or supply the coolant.

STEP 3. M.U.T.-III actuator test
- Refer to the Actuator Test Reference Table of the EV-ECU.
  a. Item 3: Water pump actuate
  b. Item 4: Radiator fan 1 actuate
  c. Item 5: Radiator fan 2 actuate
  d. Item 9: Water pump actuate 2

Q: Is the check result normal?
YES : Go to Step 4.
NO : Go to the check procedures for the diagnosis code for the actuator which has an abnormal drive.

~~**STEP 4. M.U.T.-III diagnosis code**~~

Q: Is the diagnosis code set?
YES : Replace the on board charger/DC-DC converter.
NO : Intermittent malfunction (Refer to GROUP 00 – How to Use Troubleshooting/ Inspection Service Points – How to Cope with Intermittent Malfunctions).

Code No. P1C11: DCDC ROM/RAM Fail

TROUBLE JUDGEMENT

Check Condition
- The EV-ECU is activated.

Judgement Criterion
- The ROM is abnormal (checksum is abnormal).

or
- RAM writing/reading error is detected.

FAIL-SAFE AND BACKUP FUNCTION
- The output of DC-DC converter is stopped.

PROBABLE CAUSE
- The DC-DC converter is failed.

DIAGNOSIS PROCEDURE

<Old>
~~**STEP 1. M.U.T.-III diagnosis code**~~

Q: Is the diagnosis code set?

<New>
STEP 1. Diagnosis code recheck
Check again if the diagnosis code is set to the DC-DC converter.
(1)Erase the stored diagnosis code.
(2)Set the electric motor switch from the "LOCK" (OFF) position to the "ON", and then to the "START" position temporarily.
(3)Check if the diagnosis code is set.

Attached sheet 4 (7/49)

YES : Replace the on board charger/DC-DC converter.
NO : Intermittent malfunction (Refer to GROUP 00 – How to Use Troubleshooting/ Inspection Service Points – How to Cope with Intermittent Malfunctions).

<New>

STEP 1. Diagnosis code recheck
Check again if the diagnosis code is set to the DC-DC converter.
(1)Erase the stored diagnosis code.
(2)Set the electric motor switch from the "LOCK" (OFF) position to the "ON", and then to the "START" position temporarily.
(3)Check if the diagnosis code is set.

Code No. P1C12: DCDC EEPROM Fail

TROUBLE JUDGEMENT

Check Condition and Judgement Criterion
- The abnormality is detected when the EEPROM data are read.

FAIL-SAFE AND BACKUP FUNCTION
- The output of DC-DC converter continues at the initial value.

PROBABLE CAUSE
- The DC-DC converter is failed.

DIAGNOSIS PROCEDURE

<Old>

~~STEP 1. M.U.T.-III diagnosis code~~

Q: Is the diagnosis code set?
YES : Replace the on board charger/DC-DC converter.
NO : Intermittent malfunction (Refer to GROUP 00 – How to Use Troubleshooting/ Inspection Service Points – How to Cope with Intermittent Malfunctions).

Code No. P1C13: DCDC A/D Converter

TROUBLE JUDGEMENT

Check Condition
- The EV-ECU allows the DC-DC converter to operate.

<Old>

Judgement Criterion
- When it is detected that the AD conversion module is abnormal (if the conversion time is a time-out in the AD conversion module).

FAIL-SAFE AND BACKUP FUNCTION
- The output of DC-DC converter is stopped.

PROBABLE CAUSE
- The DC-DC converter is failed.

DIAGNOSIS PROCEDURE

~~STEP 1. M.U.T.-III diagnosis code~~

Q: Is the diagnosis code set?
YES : Replace the on board charger/DC-DC converter.
NO : Intermittent malfunction (Refer to GROUP 00 – How to Use Troubleshooting/ Inspection Service Points – How to Cope with Intermittent Malfunctions).

Code No. P1C15: DCDC Output Current Sensor Fail

TROUBLE JUDGEMENT

Check Conditions
- The EV-ECU is activated.

Judgement Criterion
- The output current sensor is abnormal value.

FAIL-SAFE AND BACKUP FUNCTION
- The output DC-DC converter is stopped.

PROBABLE CAUSE
- The DC-DC converter is failed.

DIAGNOSIS PROCEDURE

<Old>

~~STEP 1. M.U.T.-III diagnosis code~~

Q: Is the diagnosis code set?

Attached sheet 4 (8/49)

YES : Replace the on board charger/DC-DC converter.
NO : Intermittent malfunction (Refer to GROUP 00 – How to Use Troubleshooting/ Inspection Service Points – How to Cope with Intermittent Malfunctions).

<New>

STEP 1. Diagnosis code recheck
Check again if the diagnosis code is set to the DC-DC converter.
(1)Erase the stored diagnosis code.
(2)Set the electric motor switch from the "LOCK" (OFF) position to the "ON", and then to the "START" position temporarily.
(3)Check if the diagnosis code is set.

Code No. P1C16: Local CAN Communication Fail

TROUBLE JUDGEMENT

Check Conditions
- The EV-ECU is activated.

Judgement Criterion
- Local CAN communication is failed.

FAIL-SAFE AND BACKUP FUNCTION
- The output of DC-DC converter is restricted.

PROBABLE CAUSE
- The DC-DC converter is failed.

DIAGNOSIS PROCEDURE

<Old>

~~STEP 1. M.U.T.-III diagnosis code~~

Q: Is the diagnosis code set?
YES : Replace the on board charger/DC-DC converter.
NO : Intermittent malfunction (Refer to GROUP 00 – How to Use Troubleshooting/ Inspection Service Points – How to Cope with Intermittent Malfunctions).

Code No. P1C19: DCDC low Temperature

TROUBLE JUDGEMENT

Check Condition
- The EV-ECU allows the DC-DC converter to operate.

Judgement Criterion
- The temperature difference between the rectifier and the internal DC-DC converter temperature sensor is less than -70° C or more than 70° C.

FAIL-SAFE AND BACKUP FUNCTION
- The output of DC-DC converter is stopped.

PROBABLE CAUSE
- The DC-DC converter is failed.

DIAGNOSIS PROCEDURE

<Old>

~~STEP 1. M.U.T.-III diagnosis code~~

Q: Is the diagnosis code set?
YES : Replace the on board charger/DC-DC converter.
NO : Intermittent malfunction (Refer to GROUP 00 – How to Use Troubleshooting/ Inspection Service Points – How to Cope with Intermittent Malfunctions).

Code No. P1C21: DCDC Input Voltage Abnormal (2)

TROUBLE JUDGEMENT

Check Conditions
- The EV-ECU allows the DC-DC converter to operate.

Judgement Criterion
- The system detects a failure "overvoltage abnormal detection circuit" in the input section by predetermined times or more.

FAIL-SAFE AND BACKUP FUNCTION
- The output of DC-DC converter is stopped.

PROBABLE CAUSE

<Old>

- ~~The output of DC-DC converter is stopped.~~

<New>

- The EV-ECU is failed.
- The high voltage system component except DC-DC converter is failed.
- The output of DC-DC converter is failed.

Attached sheet 4 (9/49)

DIAGNOSIS PROCEDURE

<Old>

~~STEP 1. M.U.T.-III diagnosis code~~

Q: Is the diagnosis code set?

YES : Replace the on board charger/DC-DC converter.

NO : Intermittent malfunction (Refer to GROUP 00 – How to Use Troubleshooting/ Inspection Service Points – How to Cope with Intermittent Malfunctions).

Code No. P1C23: Battery Sensing Voltage Abnormal

STEP 1. M.U.T.-III other system diagnosis code.
Q:Is diagnosis code of EV-ECU system set?
YES : Check EV-ECU system.
NO : Go to Step 2.

STEP 2. Diagnosis code recheck
Check again if the diagnosis code is set to the DC-DC converter.
(1)Erase the stored diagnosis code.
(2)Set the electric motor switch from the "LOCK" (OFF) position to the "ON", and then to the "START" position temporarily.
(3)Check if the diagnosis code is set.

<New>

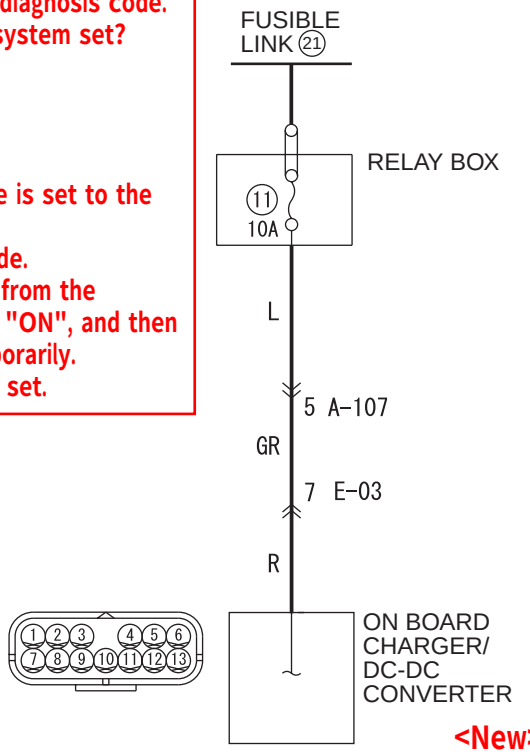

<New>

- Open circuits of output (S terminal) voltage, damage or poor contact of connector.
- Open circuits of output (B terminal) voltage.

Wire colour code
B : Black LG : Light green G : Green L : Blue W : White Y : Yellow SB : Sky blue
BR : Brown O : Orange GR : Grey R : Red P : Pink V : Violet PU : Purple SI : Silver

AKC00220

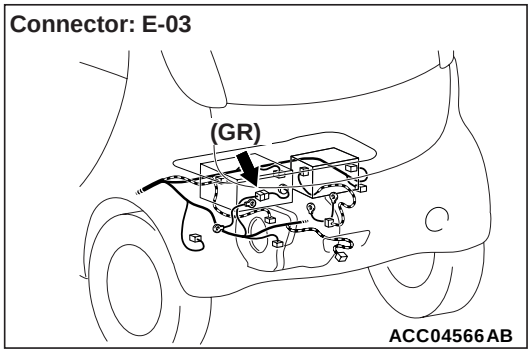

TROUBLE JUDGEMENT

Check Conditions

- The EV-ECU allows the DC-DC converter to operate.

Judgement Criterion

- The difference between the output (B terminal) voltage and the output (S terminal) voltage is less than -3.0 V or more than 3.0 V.

FAIL-SAFE AND BACKUP FUNCTION

- The output of DC-DC converter is restricted.

<Old>

PROBABLE CAUSES

- ~~Damaged wiring harness or connector(s)~~
- The DC-DC converter is failed.

DIAGNOSIS PROCEDURE

STEP 1. M.U.T.-III diagnosis code

Q: Is diagnosis code of code No. P1C04 set?

YES : Check output (B terminal) voltage reduction (Refer to Code No. P1C04: DCDC output voltage reduction. Then go to Step 2.
NO : Go to Step 2.

<Deleted>

STEP 2. M.U.T.-III diagnosis code

Q: Is the diagnosis code set?
YES : Go to Step 3.
NO : Intermittent malfunction (Refer to GROUP 00 – How to Use Troubleshooting/ Inspection Service Points – How to Cope with Intermittent Malfunctions).

<Old>

STEP 3. Connector check: E-03 on board charger/DC-DC converter connecter, fuse (No. 11) (relay box connecter)

<Old> <New>

Q: Is the check result normal?
YES : Go to Step 4.
NO : Repair the damaged connector. Correct or replace the relay box.

STEP 2.
<New>

Code No. P1D00: AC Input Voltage (Low)
Code No. P1D01: AC Input Voltage (High)
Code No. P1D02: AC Input Voltage (Over)

TROUBLE JUDGEMENT

Check Conditions

- While the on board charger is allowed to be charged from the EV-ECU.

Judgement Criterion

- The effective value of AC input voltage is more than 40 V and less than 80 V. <P1D00>

or

- The effective value of AC input voltage is more than 270 V. <P1D01>

or

- The effective value of AC input voltage is more than 300 V for a moment. <P1D02>

FAIL-SAFE AND BACKUP FUNCTION

- The charge is stopped.

PROBABLE CAUSES

- The AC power supply (at the supply side) is abnormal.
- The charging cable is failed.
- The on board charger is failed.

<Old>

STEP 4. Check the wiring harness between E-03 on board charger/DC-DC converter connector terminal No. 7 and the fuse (No. 11) (relay box connecter terminal).

Check the power supply line for open, short circuit and damage.

<Old> <New>

Q: Is the check result normal?
YES : Go to Step 5.
NO : Repair the wiring harness.

Step 4

<Old>

STEP 5. M.U.T.-III diagnosis code

Q: Is the diagnosis code set?
YES : Replace the on board charger/DC-DC converter.
NO : Intermittent malfunction (Refer to GROUP 00 – How to Use Troubleshooting/ Inspection Service Points – How to Cope with Intermittent Malfunctions).

<New>

STEP 3.

STEP 4. Diagnosis code recheck
Check again if the diagnosis code is set to the DC-DC converter.
(1)Erase the stored diagnosis code.
(2)Set the electric motor switch from the "LOCK" (OFF) position to the "ON", and then to the "START" position temporarily.
(3)Check if the diagnosis code is set.

DIAGNOSIS PROCEDURE

STEP 1. M.U.T.-III diagnosis code

Q: Is the diagnosis code set?
YES : Go to Step 2.
NO : Check the AC power supply usage conditions used by the users.

STEP 2. Check charging cable itself

- Check charging cable.

Q: Is the check result normal?
YES : Go to Step 3.
NO : Replace the charging cable.

STEP 3. M.U.T.-III diagnosis code

Q: Is the diagnosis code set?
YES : Replace the on board charger/DC-DC converter.
NO : Intermittent malfunction (Refer to GROUP 00 – How to Use Troubleshooting/ Inspection Service Points – How to Cope with Intermittent Malfunctions).

<New>
STEP 3. Diagnosis code recheck
Check again if the diagnosis code is set to the on board charger.
(1)Erase the stored diagnosis code.
(2)Perform the regular charge.
(3)Check if the diagnosis code is set.

<New>
STEP 2. Check charging cable
・Check the trouble symptom for charging cable.

<New>
STEP 1. Diagnosis code recheck
Check again if the diagnosis code is set to the on board charger.
(1)Erase the stored diagnosis code.
(2)Perform the regular charge.
(3)Check if the diagnosis code is set.

Code No. P1D00: AC Input Voltage (Low)
Code No. P1D01: AC Input Voltage (High)
Code No. P1D02: AC Input Voltage (Over)

TROUBLE JUDGEMENT

Check Conditions <Old>

- While the on board charger is allowed to be charged from the EV-ECU.

Judgement Criterion

- The effective value of AC input voltage is more than 40 V and less than 80 V. <P1D00>

or

- The effective value of AC input voltage is more than 270 V. <P1D01> <Old>

or

- The effective value of AC input voltage is more than 300 V for a moment. <P1D02>

FAIL-SAFE AND BACKUP FUNCTION

- The charge is stopped.

PROBABLE CAUSES

- The AC power supply (at the supply side) is ~~abnormal.~~ failed. <Old> <New>
- The charging cable is failed.
- The on board charger is failed.

DIAGNOSIS PROCEDURE

~~**STEP 1. M.U.T.-III diagnosis code**~~

Q: Is the diagnosis code set?
YES : Go to Step 2.
NO : Check the AC power supply usage conditions used by the users.

~~**STEP 2. Check charging cable itself**~~
~~• Check charging cable.~~

Q: Is the check result normal?
YES : Go to Step 3.
NO : Replace the charging cable.

<Old> ~~**STEP 3. M.U.T.-III diagnosis code**~~

Q: Is the diagnosis code set?
YES : Replace the on board charger/DC-DC converter.
NO : Intermittent malfunction (Refer to GROUP 00 – How to Use Troubleshooting/ Inspection Service Points – How to Cope with Intermittent Malfunctions).

Attached sheet 4 (12/49)

STEP 1. Check charging cable
・Check the trouble symptom for charging cable.
Q: Is the result normal?
YES: Go to Step 2.
NO: Replace the charging cable.

Code No. P1D03: AC Input Current (High) <Added>

TROUBLE JUDGEMENT

Check Conditions
- While the on board charger is allowed to be charged from the EV-ECU.
- While the AC power supply is being input.

Judgement Criterion
- The effective current of AC input current is more than input current maximum value.

FAIL-SAFE AND BACKUP FUNCTION
- The charge is stopped.

PROBABLE CAUSE <Old>
- ~~The AC power supply (at the supply side) is abnormal.~~
- The on board charger is failed.

<New>
・The AC power supply (at the supply side) is failed.
・The charging cable is failed.

DIAGNOSIS PROCEDURE

~~STEP 1. M.U.T.-III diagnosis code~~ <Old>

Q: Is the diagnosis code set?
YES : Replace the on board charger/DC-DC converter.
NO : Check the AC power supply usage conditions used by the users. If there are no problems, the fault is determined as an intermittent Malfunction (Refer to GROUP 00 – How to Use Troubleshooting/ Inspection Service Points – How to Cope with Intermittent Malfunctions).

<New>
STEP 2. Diagnosis code recheck
Check again if the diagnosis code is set to the on board charger.
(1)Erase the stored diagnosis code.
(2)Perform the regular charge.
(3)Check if the diagnosis code is set.

Code No. P1D06: Output Voltage (High)

TROUBLE JUDGEMENT

Check Conditions
- While the on board charger is allowed to be charged from the EV-ECU.

Judgement Criterion
- The output (terminal) voltage is more than 400 V.

FAIL-SAFE AND BACKUP FUNCTION
- The charge is stopped.

PROBABLE CAUSES
- The EV-ECU is failed.
- The on board charger is failed.

DIAGNOSIS PROCEDURE

STEP 1. M.U.T.-III diagnosis code

Q: Is diagnosis code of code No. P1D14 set?
YES : Check request voltage malfunction (Refer to Code No. P1D14: Voltage command abnormal).
NO : Go to Step 2.

STEP 2. M.U.T.-III other system diagnosis code.

Q: Is diagnosis code of EV-ECU system set?
YES : Check EV-ECU system.
NO : Go to Step 3.

<Old>

~~STEP 3. M.U.T.-III diagnosis code~~

Q: Is the diagnosis code set?
YES : Replace the on board charger/DC-DC converter.
NO : Intermittent malfunction (Refer to GROUP 00 – How to Use Troubleshooting/ Inspection Service Points – How to Cope with Intermittent Malfunctions).

<New>
STEP 3. Diagnosis code recheck
Check again if the diagnosis code is set to the on board charger.
(1)Erase the stored diagnosis code.
(2)Perform the regular charge.
(3)Check if the diagnosis code is set.

Code No. P1D07: Output Voltage (Over)

TROUBLE JUDGEMENT

Check Conditions
- While the on board charger is allowed to be charged from the EV-ECU.

Judgement Criterion
- The system detects overvoltage detection signal by predetermined times or more at the rectification area.

FAIL-SAFE AND BACKUP FUNCTION
- The charge is stopped.

Attached sheet 4 (13/49)

PROBABLE CAUSE

- The on board charger is failed.

DIAGNOSIS PROCEDURE

<Old>

~~**STEP 1. M.U.T.-III diagnosis code**~~

Q: Is the diagnosis code set?

YES : Replace the on board charger/DC-DC converter.

NO : Intermittent malfunction (Refer to GROUP 00 – How to Use Troubleshooting/ Inspection Service Points – How to Cope with Intermittent Malfunctions).

<Added>

- The traction battery assembly is failed.
- The EV-ECU is failed.

<New>

STEP 1. M.U.T.- III other system diagnosis code.
Q: Is diagnosis code of EV-ECU system set ?
YES: Check EV-ECU system.
NO: Go to Step 2.

STEP 2. Diagnosis code recheck
Check again if the diagnosis code is set to the on board charger.
(1)Erase the stored diagnosis code.
(2)Perform the regular charge.
(3)Check if the diagnosis code is set.

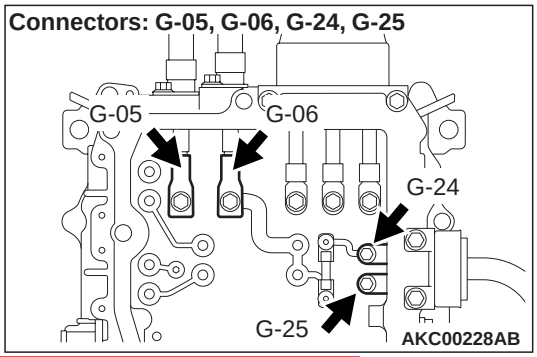

・The traction battery assembly is failed. <Added>

TROUBLE JUDGEMENT

Check Conditions

- While the on board charger is allowed to be charged from the EV-ECU.

Judgement Criterion

- The output (terminal) voltage is less than 180 V.

FAIL-SAFE AND BACKUP FUNCTION

- The charge is stopped.

PROBABLE CAUSES

- Fuse meltdown between on board charger and inverter
- Open circuits or damage of high voltage circuits between on board charger and traction battery; or poor contact of connector
- The on board charger is failed.

DIAGNOSIS PROCEDURE

⚠ *DANGER*

When high voltage system components are served, be sure to pull service plugs to shut down high voltage.

⚠ *DANGER*

When pulling service plugs, wear the specified protective equipment.

STEP 1. M.U.T.-III other system diagnosis code.

Q: Is the diagnosis code of EV-ECU system set?
YES : Check EV-ECU system.
NO : Go to Step 2.

<New>

STEP 4. Check harness between G-24 inverter (+ terminal) connector, G-25 inverter (- terminal) and inverter and on board charger/DC-DC converter connector
・Check power supply line for open circuit and damage.
Q: Is the check result normal?
YES: Go to Step 5.
NO: Repair or replace the inverter and on board charger/DC-DC converter.

STEP 2. Continuity check on fuse between on board charger and inverter

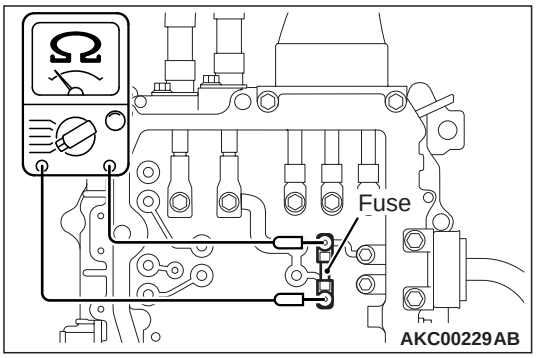

⚠ *DANGER*

When high voltage system components are served, be sure to pull service plugs to shut down high voltage before serving.

⚠ *DANGER*

When pulling service plugs, wear the specified protective equipment.

<New>

- Check continuity of fuse both ends.

OK: Continuity

Q: Is the check result normal?
YES : Go to Step 3.
NO : Replace the fuse.

STEP 3. Connector check:
G-24 inverter (+ terminal),
G-25 inverter (- terminal),
G-06 inverter (+ terminal),
G-05 inverter (- terminal)
connector

<Old>

~~**STEP 3. Connector check: G-24 inverter and on board charger/DC-DC converter combination (+ terminal) connector, G-25 inverter and on board charger/DC-DC converter combination (– terminal) connector, G-05 inverter (– terminal) connector, G-06 inverter (+ terminal) connector**~~

Q: Is the check result normal?
YES : Go to Step 4.
NO : Repair.

<Old>

~~**STEP 4. Check harness between G-24 (terminal No. 1) inverter and on board charger/DC-DC converter combination (+ terminal) connector and G-06 (terminal No. 1) inverter (+ terminal) connector**~~

- ~~Check power supply line for open circuit and damage.~~

~~**Q: Is the check result normal?**~~
~~**YES :** Go to Step 5.~~
~~**NO :** Repair.~~

Attached sheet 4 (15/49)

<Old>

~~**STEP 5. Check harness between G-25 (terminal No. 1) inverter and on board charger/DC-DC converter combination (– terminal) connector and G-05 (terminal No. 1) inverter (– terminal) connector**~~

- Check power supply line for open circuit and damage.

Q: Is the check result normal?
YES : Go to Step 6.
NO : Repair.

<New>

STEP 5. Check harness between G-06 inverter (+ terminal) connector, G-05 inverter (- terminal) and G-19 traction battery (+ terminal) connector, G-18 traction battery (- terminal) connector
・Check power supply line for open circuit and damage.
Q: Is the check result normal?
YES: Go to Step 5.
NO: Repair or replace the traction battery cable.

Code No. P1D09: Output Current (High)
Code No. P1D10: Output Current (Control Fail)

TROUBLE JUDGEMENT

Check Conditions

- While the on board charger is allowed to be charged from the EV-ECU.
- While the AC power supply is being input.

Judgement Criterion

- When the input voltage is AC 100 V, the output current is more than 7.0 A. <P1D09>

or

- When the input voltage is AC 200 V, the output current is more than 10.0 A. <P1D09>

or <Old>

- The difference between the target output current and the ~~actual output current~~ output current is more than 1.0 A or less than -1.0 A. <P1D10>

FAIL-SAFE AND BACKUP FUNCTION <New>

- The charge is stopped.

PROBABLE CAUSES

- The EV-ECU is failed.
- The on board charger is failed.

<New>

DIAGNOSIS PROCEDURE

STEP 1. M.U.T.-III diagnosis code

Q: Is diagnosis code of Code No. P1D15 set?
YES : Check current command abnormal (Refer to Code No. P1D15: Current command abnormal).
NO : Go to Step 2.

STEP 2. M.U.T.-III other system diagnosis code.

Q: Is diagnosis code of EV-ECU system set?
YES : Check EV-ECU system.
NO : Go to Step 3.

<Old>

~~**STEP 3. M.U.T.-III diagnosis code**~~

Q: Is the diagnosis code set?
YES : Replace the on board charger/DC-DC converter.
NO : Intermittent malfunction (Refer to GROUP 00 – How to Use Troubleshooting/ Inspection Service Points – How to Cope with Intermittent Malfunctions).

<New>

STEP 3. Diagnosis code recheck
Check again if the diagnosis code is set to the on board charger.
(1)Erase the stored diagnosis code.
(2)Perform the regular charge.
(3)Check if the diagnosis code is set.

<Old>

~~**STEP 6. M.U.T.-III diagnosis code**~~

Q: Is the diagnosis code set?
YES : Replace the on board charger/DC-DC converter.
NO : Intermittent malfunction (Refer to GROUP 00 – How to Use Troubleshooting/ Inspection Service Points – How to Cope with Intermittent Malfunctions).

<New>

STEP 6. Diagnosis code recheck
Check again if the diagnosis code is set to the on board charger.
(1)Erase the stored diagnosis code.
(2)Perform the regular charge.
(3)Check if the diagnosis code is set.

Attached sheet 4 (16/49)

DIAGNOSIS PROCEDURE

<Old>

~~STEP 1. M.U.T.-III diagnosis code~~

Q: Is the diagnosis code set?

YES : Replace the on board charger/DC-DC converter.

NO : Intermittent malfunction (Refer to GROUP 00 – How to Use Troubleshooting/ Inspection Service Points – How to Cope with Intermittent Malfunctions).

<New>

STEP 1. Diagnosis code recheck
Check again if the diagnosis code is set to the on board charger.
(1)Erase the stored diagnosis code.
(2)Perform the regular charge.
(3)Check if the diagnosis code is set.

Code No. P1D13: IGCG Voltage Abnormal

On board charger control power supply circuit

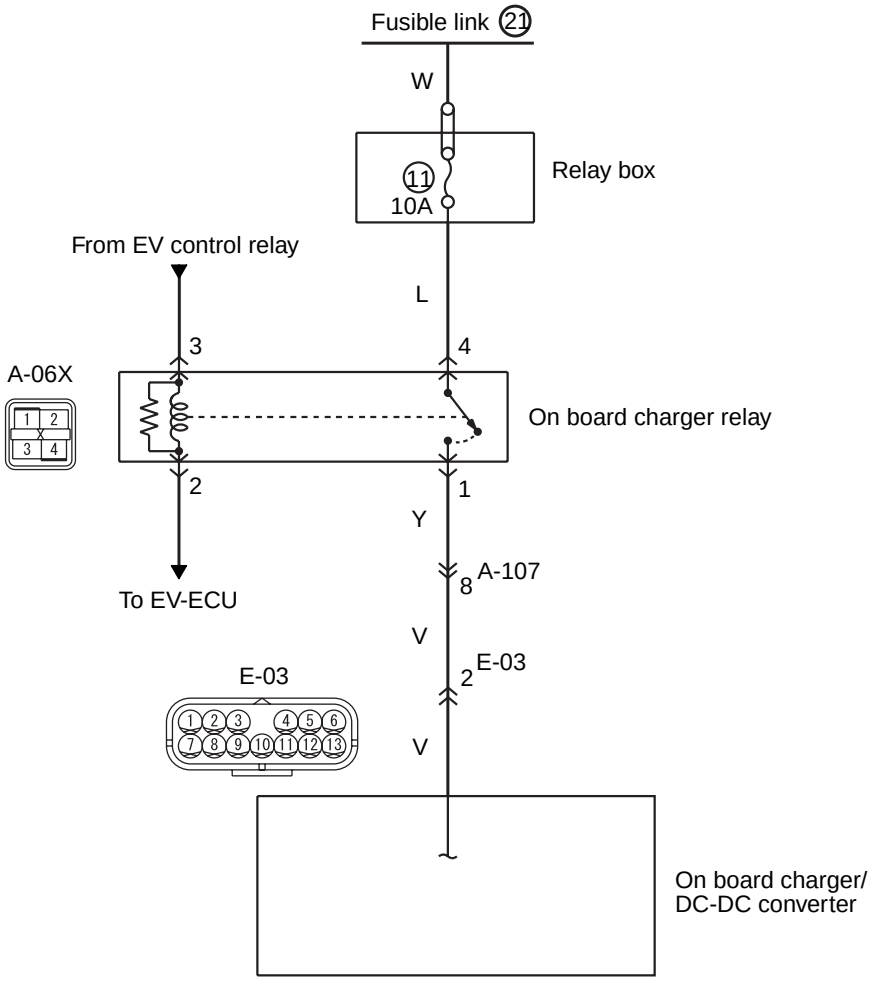

Wire colour code
B: Black LG: Light green G: Green L: Blue W: White Y: Yellow SB: Sky blue BR: Brown O: Orange GR: Grey
R: Red P: Pink V: Violet PU: Purple SI: Silver

AKB00011AB

STEP 6. Check A-06X on board charger relay itself.

- Check on board charger relay itself.

Q: Is the check result normal?
YES : Go to Step 7.
NO : Replace the on board charger relay.

STEP 7. Connector check: E-03 on board charger/DC-DC converter, A-06X on board charger relay (relay box) connecter

Q: Is the check result normal?
YES : Go to Step 8.
NO : Repair the damaged connector. Or, correct or replace the relay box.

STEP 8. Check harness between A-06X (terminal No. 1) on board charger relay connector and E-03 (terminal No. 2) on board charger/DC-DC converter connector

NOTE: Before checking harness, check intermediate connector A-107, and repair if necessary.

- Check output line for damage.

Q: Is the check result normal?
YES : Go to Step 9.
NO : Repair.

<Old>

~~**STEP 9. M.U.T.-III diagnosis code**~~

Q: Is the diagnosis code set?
YES : Replace the on board charger/DC-DC converter.
NO : Intermittent malfunction (Refer to GROUP 00 – How to Use Troubleshooting/ Inspection Service Points – How to Cope with Intermittent Malfunctions).

<New>

STEP 9. Diagnosis code recheck
Check again if the diagnosis code is set to the on board charger.
(1)Erase the stored diagnosis code.
(2)Perform the regular charge.
(3)Check if the diagnosis code is set.

Code No. P1D14: Voltage Command Abnormal

TROUBLE JUDGEMENT

Check Conditions

- While the on board charger is allowed to be charged from the EV-ECU.
- While the AC power supply is being input.

Judgement Criterion

- The charging voltage command from the EV-ECU exceeds 370 V (upper limit).

or

- The charging voltage command from the EV-ECU is less than 0 V.

FAIL-SAFE AND BACKUP FUNCTION

- The charge is stopped.

PROBABLE CAUSES

- The EV-ECU is failed.
- The on board charger is failed.

<New>

DIAGNOSIS PROCEDURE

STEP 1. M.U.T.-III other system diagnosis code.

Q: Is diagnosis code of EV-ECU system set?
YES : Check EV-ECU system.
NO : Go to Step 2.

<Old>

~~**STEP 2. M.U.T.-III diagnosis code**~~

Q: Is the diagnosis code set?
YES : Replace the on board charger/DC-DC converter.
NO : Intermittent malfunction (Refer to GROUP 00 – How to Use Troubleshooting/ Inspection Service Points – How to Cope with Intermittent Malfunctions).

<New>

STEP 2. Diagnosis code recheck
Check again if the diagnosis code is set to the on board charger.
(1)Erase the stored diagnosis code.
(2)Perform the regular charge.
(3)Check if the diagnosis code is set.

Code No. P1D15: Current Command Abnormal

TROUBLE JUDGEMENT

Check Conditions

- While the on board charger is allowed to be charged from the EV-ECU.

Judgement Criterion

- The charging current command from the EV-ECU is more than 5.5 A (upper limit of judgement that 100 V is received).

or

- The charging current command from the EV-ECU is more than 10 A (upper limit of judgement that 200 V is received).

FAIL-SAFE AND BACKUP FUNCTION

- The charge is stopped.

PROBABLE CAUSES

- The EV-ECU is failed.
- The on board charger is failed.

DIAGNOSIS PROCEDURE

<New>

STEP 1. M.U.T.-III other system diagnosis code.

Q: Is diagnosis code of EV-ECU system set?

YES : Check EV-ECU system.
NO : Go to Step 2.

<Old>

~~**STEP 2. M.U.T.-III diagnosis code**~~

Q: Is the diagnosis code set?

YES : Replace the on board charger/DC-DC converter.
NO : Intermittent malfunction (Refer to GROUP 00 – How to Use Troubleshooting/ Inspection Service Points – How to Cope with Intermittent Malfunctions).

<New>

STEP 2. Diagnosis code recheck
Check again if the diagnosis code is set to the on board charger.
(1)Erase the stored diagnosis code.
(2)Perform the regular charge.
(3)Check if the diagnosis code is set.

Code No. P1D16: Pilot Signal (Charge not Allowed)
Code No. P1D17: Pilot Signal (Communication)
Code No. P1D18: Pilot Signal Frequency Abnormal
Code No. P1D43: Pilot Signal Voltage

Pilot signal circuit

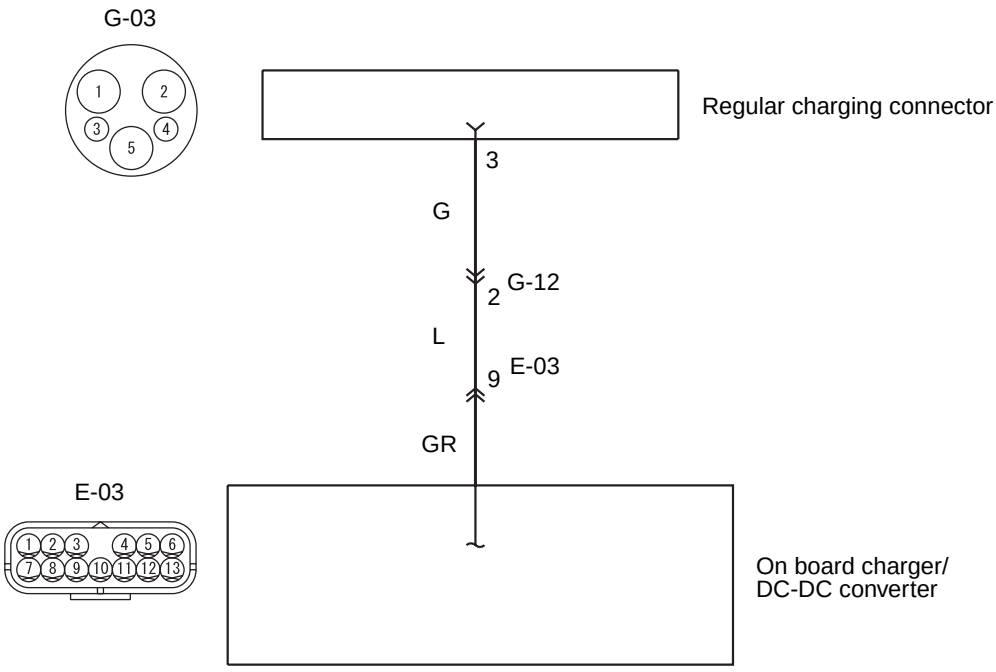

Wire colour code
B: Black LG: Light green G: Green L: Blue W: White Y: Yellow SB: Sky blue BR: Brown O: Orange GR: Grey
R: Red P: Pink V: Violet PU: Purple SI: Silver

<New>

AKB00015AB

STEP 5. Diagnosis code recheck
Check again if the diagnosis code is set to the on board charger.
(1)Erase the stored diagnosis code.
(2)Perform the regular charge.
(3)Check if the diagnosis code is set.

<Old>

To attached sheet 4 (19/49), (20/49)

Attached sheet 4 (19/49)

<New>

STEP 1. Check the control box status of the charging cable.
・During the regular charging

Q: Is the FAULT indicator lit or blinked?
YES: Refer to Inspection Procedure: FAULT indicator is lit, FAULT indicator blinks.
NO: Go to Step 2.

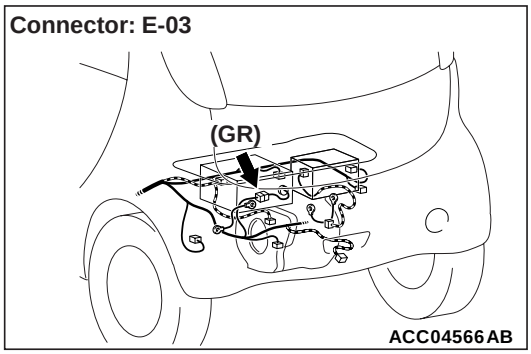

TROUBLE JUDGEMENT

Check Conditions

- While the on board charger is allowed to be charged from the EV-ECU.

Judgement Criterion

- The pilot frequency is from 970 Hz to 1,030Hz and the pilot signal duty ratio is less than 3 %. <P1D16>

or

- The pilot frequency is from 970 Hz to 1,030Hz and the pilot signal duty ratio is from 7 % to 8 %. <P1D16>

or

- The pilot frequency is from 970 Hz to 1,030Hz and the pilot signal duty ratio is more than 97 %. <P1D16>

or

- The pilot frequency is from 970 Hz to 1,030Hz and the pilot signal duty ratio is from 3 % to 7 %. <P1D17>

or

- The pilot frequency is less than 970 Hz. <P1D18>

or

- The pilot frequency is more than 1,030 Hz. <P1D18>

or

- When the system is in charging standby, the pilot signal voltage is 9 V. <P1D43>

or <Old>

- ~~When charging is permitted, the pilot signal voltage is 6 V. <P1D43>~~

・When the system is in charging standby, the pilot signal voltage is except 9 V, or when the system is in charging, the pilot signal voltage is except 6 V . <P1D43>

<New>

FAIL-SAFE AND BACKUP FUNCTION

- The charge is stopped.

PROBABLE CAUSES

- The charging cable is failed.
- Open circuits of pilot signal circuit, short circuits to earth, short circuits to power supply system and damage; poor contacts of connector
- The on board charger is failed.
- The earth of power supply facility is failed.

DIAGNOSIS PROCEDURE

<Old>

~~**STEP 1. Check the charging circuit interrupting device status of the charging cable.**~~

- ~~During the regular charging.~~

~~**Q: Is the FAULT indicator (red lamp) lit or blinked?**~~
~~**YES :** Refer to Inspection Procedure: FAULT indicator (red lamp) is lit, FAULT indicator (red lamp) blinks.~~
~~**NO :** Go to Step 2.~~

STEP 2. Check pilot signal terminal itself.

- Check charging cable.

Q: Is the check result normal?
YES : Go to Step 3.
NO : Replace the charging cable.

STEP 3. Connector check: G-03 regular charging connector and E-03 on board charger/DC-DC converter connector.

Q: Are the check results normal?
YES : Go to Step 4.
NO : Repair or replace the connector.

STEP 4. Check harness between G-03 (terminal No. 3) regular charging connector and E-03 (terminal No. 9) on board charger/DC-DC converter.

NOTE: Before checking harness, check intermediate connector G-12, and repair if necessary.

- Check the signal line for open circuits, short circuits to earth and damage.

Q: Is the check result normal?
YES : Go to Step 5.
NO : Repair the damaged harness wire.

<Old>

~~**STEP 5. M.U.T.-III diagnosis code**~~

- ~~Reconfirmation of diagnosis code.~~

Q: Is diagnosis code set?

<New>

From attached sheet 4 (18/49)

Attached sheet 4 (20/49)

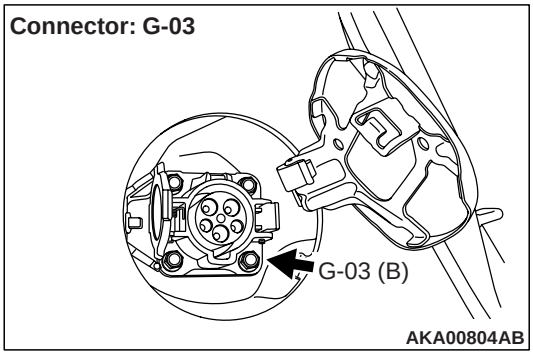

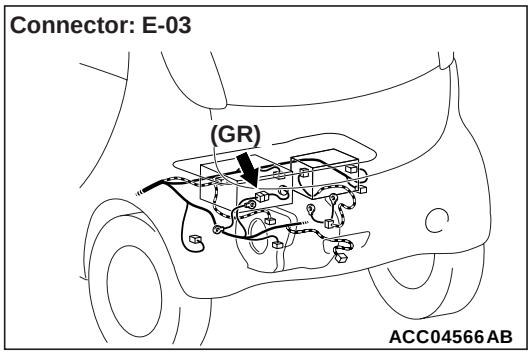

TROUBLE JUDGEMENT

Check Conditions

- While the on board charger is allowed to be charged from the EV-ECU.

Judgement Criterion

- The pilot frequency is from 970 Hz to 1,030Hz and the pilot signal duty ratio is less than 3 %. <P1D16>

or

- The pilot frequency is from 970 Hz to 1,030Hz and the pilot signal duty ratio is from 7 % to 8 %. <P1D16>

or

- The pilot frequency is from 970 Hz to 1,030Hz and the pilot signal duty ratio is more than 97 %. <P1D16>

or

- The pilot frequency is from 970 Hz to 1,030Hz and the pilot signal duty ratio is from 3 % to 7 %. <P1D17>

or

- The pilot frequency is less than 970 Hz. <P1D18>

or

- The pilot frequency is more than 1,030 Hz. <P1D18>

or

- When the system is in charging standby, the pilot signal voltage is 9 V. <P1D43>

or <Old>

- ~~When charging is permitted, the pilot signal voltage is 6 V. <P1D43>~~

- When the system is in charging standby, the pilot signal voltage is except 9 V, or when the system is in charging, the pilot signal voltage is except 6 V . <P1D43> <New>

FAIL-SAFE AND BACKUP FUNCTION

- The charge is stopped.

PROBABLE CAUSES

- The charging cable is failed.
- Open circuits of pilot signal circuit, short circuits to earth, short circuits to power supply system and damage; poor contacts of connector
- The on board charger is failed.
- The earth of power supply facility is failed.

DIAGNOSIS PROCEDURE

STEP 1. Check the control box status of the charging cable.

• During the regular charging

Q: Is the FAULT indicator lit or blinked?
YES: Refer to Inspection Procedure: FAULT indicator is lit, FAULT indicator blinks.
NO: Go to Step 2.

STEP 2. Check pilot signal terminal itself.

- Check charging cable

Q: Is the check result normal?
YES : Go to Step 3.
NO : Replace the charging cable.

STEP 3. Connector check: G-03 regular charging connector and E-03 on board charger/DC-DC converter connector.

Q: Are the check results normal?
YES : Go to Step 4.
NO : Repair or replace the connector.

STEP 4. Check harness between G-03 (terminal No. 3) regular charging connector and E-03 (terminal No. 9) on board charger/DC-DC converter.

NOTE: Before checking harness, check intermediate connector G-12, and repair if necessary.

- Check the signal line for open circuits, short circuits to earth and damage.

Q: Is the check result normal?
YES : Go to Step 5.
NO : Repair the damaged harness wire.

<Old>

~~STEP 5. M.U.T.-III diagnosis code~~

- ~~Reconfirmation of diagnosis code.~~

Q: Is diagnosis code set?

<New>

From attached sheet 4 (18/49)

YES : Go to Step 6.
NO : Intermittent malfunction (Refer to GROUP 00 – How to Use Troubleshooting/ Inspection Service Points – How to Cope with Intermittent Malfunctions).

STEP 6. Check earth of power supply facility

Q: Is the check result normal?
YES : Go to Step 7.
NO : Repair the power supply facility.

<Old>

~~**STEP 7. M.U.T.-III diagnosis code**~~
- ~~Reconfirmation of diagnosis code.~~

Q: Is diagnosis code set?
YES : Replace the on board charger/DC-DC converter.
NO : Intermittent malfunction (Refer to GROUP 00 – How to Use Troubleshooting/ Inspection Service Points – How to Cope with Intermittent Malfunctions).

<New>

STEP 7. Diagnosis code recheck
Check again if the diagnosis code is set to the on board charger.
(1)Erase the stored diagnosis code.
(2)Perform the regular charge.
(3)Check if the diagnosis code is set.

Code No. P1D23: Power Circuit (Pre-charge fail)

TROUBLE JUDGEMENT

Check Conditions
- While the on board charger is allowed to be charged from the EV-ECU.
- While the AC power supply is being input.

Judgement Criterion
- The power factor improvement circuit voltage is more than overcurrent detection signal by predetermined times.

FAIL-SAFE AND BACKUP FUNCTION
- The charge is stopped.

<Added>

- The AC power supply (at the supply side) is failed.

PROBABLE CAUSE
- The on board charger is failed.

DIAGNOSIS PROCEDURE

<Old>

~~**STEP 1. M.U.T.-III diagnosis code**~~

Q: Is the diagnosis code set?
YES : Replace the on board charger/DC-DC converter.
NO : Intermittent malfunction (Refer to GROUP 00 – How to Use Troubleshooting/ Inspection Service Points – How to Cope with Intermittent Malfunctions).

<New>

STEP 1. Diagnosis code recheck
Check again if the diagnosis code is set to the on board charger.
(1)Erase the stored diagnosis code.
(2)Perform the regular charge.
(3)Check if the diagnosis code is set.

Code No. P1D25: Inverter Output Current

TROUBLE JUDGEMENT

Check Conditions
- While the on board charger is allowed to be charged from the EV-ECU.

Judgement Criterion
- The system detects overcurrent detection signal by predetermined times or more at the section where voltage rises.

FAIL-SAFE AND BACKUP FUNCTION
- The charge is stopped.

PROBABLE CAUSE
- The on board charger is failed.

DIAGNOSIS PROCEDURE

<Old>

~~**STEP 1. M.U.T.-III diagnosis code**~~

Q: Is the diagnosis code set?
YES : Replace the on board charger/DC-DC converter.
NO : Intermittent malfunction (Refer to GROUP 00 – How to Use Troubleshooting/ Inspection Service Points – How to Cope with Intermittent Malfunctions).

<New>

STEP 1. Diagnosis code recheck
Check again if the diagnosis code is set to the on board charger.
(1)Erase the stored diagnosis code.
(2)Perform the regular charge.
(3)Check if the diagnosis code is set.

Code No. P1D26: Internal Temperature
Code No. P1D27: PFC Temperature
Code No. P1D40: Rectifier Coil Temperature
Code No. P1D41: Input Diode Temperature

TROUBLE JUDGEMENT

Check Conditions
- While the on board charger is allowed to be charged from the EV-ECU.

Judgement Criterion
- The inside ambient temperature sensor is more than 110° C. <P1D26>
- The power factor improvement circuit temperature sensor is more than 110° C. <P1D27>
- The coil of rectification area temperature sensor is more than 110° C. <P1D40>
- The input diode area temperature sensor is more than 110° C. <P1D41>

FAIL-SAFE AND BACKUP FUNCTION
- The charge is stopped.

<Added>

PROBABLE CAUSES
- There is not enough coolant.
- The water pump is failed.
- The radiator fan is failed.
- The temperature sensor installed in the on board charger is failed.
- The EV-ECU is failed.

DIAGNOSIS PROCEDURE

<Old>

STEP 1. M.U.T.-III other system diagnosis code.

Q: Is diagnosis code of EV-ECU system set?
YES : Check EV-ECU system.
NO : Go to Step 2.

STEP 2. Check the coolant.

NOTE: If the coolant largely decreases, check whether the coolant leakage exists or not. Repair it if necessary.
- Check on coolant (Refer to GROUP 14 – On-vehicle Service – Coolant Check).

Q: Is the check result normal?
YES : Go to Step 3.
NO : Replace or supply the coolant.

STEP 3. M.U.T.-III actuator test
- Refer to the Actuator Test Reference Table of the EV-ECU.
  a. Item 3: Water pump actuate
  b. Item 4: Radiator fan 1 actuate
  c. Item 5: Radiator fan 2 actuate
  d. Item 9: Water pump actuate 2

Q: Is the check result normal?
YES : Go to Step 4.
NO : Go to the check procedures for the diagnosis code for the actuator which has an abnormal drive.

~~STEP 4. M.U.T.-III diagnosis code~~

Q: Is the diagnosis code set?
YES : Replace the on board charger/DC-DC converter.
NO : Intermittent malfunction (Refer to GROUP 00 – How to Use Troubleshooting/ Inspection Service Points – How to Cope with Intermittent Malfunctions).

<New>

STEP 4. Diagnosis code recheck
Check again if the diagnosis code is set to the on board charger.
(1)Erase the stored diagnosis code.
(2)Perform the regular charge.
(3)Check if the diagnosis code is set.

Code No. P1D31: ROM/RAM Fail

TROUBLE JUDGEMENT

Check Condition
- While the on board charger is allowed to be charged from the EV-ECU.

Judgement Criterion
- The ROM is abnormal (checksum is abnormal).

or
- RAM writing/reading error is detected.

FAIL-SAFE AND BACKUP FUNCTION
- The charge is stopped.

PROBABLE CAUSE
- The on board charger is failed.

DIAGNOSIS PROCEDURE

<Old>

~~STEP 1. M.U.T.-III diagnosis code~~

Q: Is the diagnosis code set?

YES : Replace the on board charger/DC-DC converter.

NO : Intermittent malfunction (Refer to GROUP 00 – How to Use Troubleshooting/ Inspection Service Points – How to Cope with Intermittent Malfunctions).

<New>

STEP 1. Diagnosis code recheck
Check again if the diagnosis code is set to the on board charger.
(1)Erase the stored diagnosis code.
(2)Perform the regular charge.
(3)Check if the diagnosis code is set.

Code No. P1D32: EEPROM Fail

TROUBLE JUDGEMENT

Check Condition and Judgement Criterion

- The abnormality is detected when the EEPROM data are read.

FAIL-SAFE AND BACKUP FUNCTION

- The charge continues at the initial value.

PROBABLE CAUSE

- The on board charger is failed.

DIAGNOSIS PROCEDURE

<Old>

~~STEP 1. M.U.T.-III diagnosis code~~

Q: Is the diagnosis code set?

YES : Replace the on board charger/DC-DC converter.

NO : Intermittent malfunction (Refer to GROUP 00 – How to Use Troubleshooting/ Inspection Service Points – How to Cope with Intermittent Malfunctions).

<New>

STEP 1. Diagnosis code recheck
Check again if the diagnosis code is set to the on board charger.
(1)Erase the stored diagnosis code.
(2)Perform the regular charge.
(3)Check if the diagnosis code is set.

Code No. P1D33: AD Converter Abnormal

TROUBLE JUDGEMENT

Check Condition

- While the on board charger is allowed to be charged from the EV-ECU.

Judgement Criterion

- When it is detected that the AD conversion module is abnormal (if the conversion time is a time-out in the AD conversion module).

FAIL-SAFE AND BACKUP FUNCTION

- The charge is stopped.

PROBABLE CAUSE

- The on board charger is failed.

DIAGNOSIS PROCEDURE

<Old>

~~STEP 1. M.U.T.-III diagnosis code~~

Q: Is the diagnosis code set?

YES : Replace the on board charger/DC-DC converter.

NO : Intermittent malfunction (Refer to GROUP 00 – How to Use Troubleshooting/ Inspection Service Points – How to Cope with Intermittent Malfunctions).

<New>

STEP 1. Diagnosis code recheck
Check again if the diagnosis code is set to the on board charger.
(1)Erase the stored diagnosis code.
(2)Perform the regular charge.
(3)Check if the diagnosis code is set.

Code No. P1D34: Input Current Sensor Fail
Code No. P1D35: Output Current Sensor Fail

TROUBLE JUDGEMENT

Check Conditions

- When the charging cable is connected.

Judgement Criterion

- Input current is abnormal value. <P1D34>
- The output current is abnormal value. <P1D35>

FAIL-SAFE AND BACKUP FUNCTION

- The charge is stopped.

PROBABLE CAUSE

- The on board charger is failed.

Attached sheet 4 (24/49)

DIAGNOSIS PROCEDURE

<Old>

~~STEP 1. M.U.T.-III diagnosis code~~

Q: Is the diagnosis code set?

YES : Replace the on board charger/DC-DC converter.

NO : Intermittent malfunction (Refer to GROUP 00 – How to Use Troubleshooting/ Inspection Service Points – How to Cope with Intermittent Malfunctions).

<New>

STEP 1. Diagnosis code recheck
Check again if the diagnosis code is set to the on board charger.
(1)Erase the stored diagnosis code.
(2)Perform the regular charge.
(3)Check if the diagnosis code is set.

Code No. P1D37: AC Power Supply/ AC Input Fuse 1
Code No. P1D44: Power Supply Equipment Abnormal

TROUBLE JUDGEMENT

Check Conditions

- While the on board charger is allowed to be charged from the EV-ECU.

Judgement Criterion

- The pilot signal duty ratio is from 8 % to 97 %. <P1D37>

and

- The AC input voltage is less than 80 V. <P1D37>

or

- The AC input voltage is less than -20 A or more than 20 A. <P1D44>

FAIL-SAFE AND BACKUP FUNCTION

- The charge is stopped.

PROBABLE CAUSES

- The AC power supply (at the supply side) is ~~abnormal~~. failed.

<Old> <New>

- The charging cable is failed.
- The on board charger is failed.

<New>

STEP 1. Diagnosis code recheck
Check again if the diagnosis code is set to the on board charger.
(1)Erase the stored diagnosis code.
(2)Perform the regular charge.
(3)Check if the diagnosis code is set.

Code No. P1D42: Temperature Sensor

TROUBLE JUDGEMENT

Check Condition

- While the on board charger is allowed to be charged from the EV-ECU.

Judgement Criterion

- The difference between the maximum value and mean value which the temperature sensors detect is less than -50° C or more than 50° C.

FAIL-SAFE AND BACKUP FUNCTION

- The charge is stopped.

DIAGNOSIS PROCEDURE

<Old>

~~STEP 1. M.U.T.-III diagnosis code~~

Q: Is the diagnosis code set?

YES : Go to Step 2.

NO : Check the AC power supply usage conditions used by the users.

<Old>

~~STEP 2. Check charging cable itself~~
- ~~Check charging cable.~~

<New>

STEP 2. Check charging cable
- Check the trouble symptom for charging cable.

Q: Is the check result normal?

YES : Go to Step 3.

NO : Replace the charging cable.

<Old>

~~STEP 3. M.U.T.-III diagnosis code~~

Q: Is the diagnosis code set?

YES : Replace the on board charger/DC-DC converter.

NO : Intermittent malfunction (Refer to GROUP 00 – How to Use Troubleshooting/ Inspection Service Points – How to Cope with Intermittent Malfunctions).

<New>

STEP 3. Diagnosis code recheck
Check again if the diagnosis code is set to the on board charger.
(1)Erase the stored diagnosis code.
(2)Perform the regular charge.
(3)Check if the diagnosis code is set.

PROBABLE CAUSE

- The on board charger is failed.

DIAGNOSIS PROCEDURE

<Old>

~~STEP 1. M.U.T.-III diagnosis code~~

Q: Is the diagnosis code set?

YES : Replace the on board charger/DC-DC converter.

NO : Intermittent malfunction (Refer to GROUP 00 – How to Use Troubleshooting/ Inspection Service Points – How to Cope with Intermittent Malfunctions).

Attached sheet 4 (25/49)

Code No. P1D45: Failure Detection Circuit

TROUBLE JUDGEMENT

Check Conditions
- When the charging cable is connected.

Judgement Criterion
- The system detects overcurrent detection signal by predetermined times or more at the section where voltage rises. <Old>

or
- The system detects overvoltage detection signal by predetermined times or more at the rectification area.

or
- The system detects overcurrent detection signal by predetermined times or more at the rectification area. <New>

<New>
- The charge is stopped. <on board charger>

or
- The output is restricted. <DC-DC converter>

FAIL-SAFE AND BACKUP FUNCTION
- The charge is stopped.

PROBABLE CAUSE
- The on board charger is failed.

DIAGNOSIS PROCEDURE

~~**STEP 1. M.U.T.-III diagnosis code**~~

Q: Is the diagnosis code set?
- **YES :** Replace the on board charger/DC-DC converter.
- **NO :** Intermittent malfunction (Refer to GROUP 00 – How to Use Troubleshooting/ Inspection Service Points – How to Cope with Intermittent Malfunctions).

<New>
STEP 1. Diagnosis code recheck
Check again if the diagnosis code is set to the on board charger.
(1)Erase the stored diagnosis code.
(2)Perform the regular charge.
(3)Check if the diagnosis code is set.

- **YES :** Go to Step 2.
- **NO :** Repair CAN bus line (Refer to GROUP 54C – Troubleshooting – CAN Bus Diagnostics Table).

STEP 2. M.U.T.-III other diagnosis code.
Check if the diagnosis code No. P1C16 is set.

Q: Is diagnosis code set?
- **YES :** Carry out troubleshooting for the diagnosis code No. P1C16.
- **NO :** Go to Step 3.

STEP 3. M.U.T.-III other system diagnosis code.

Q: Is diagnosis code of EV-ECU system set?
- **YES :** Check EV-ECU system.
- **NO :** Go to Step 4.

STEP 4. M.U.T.-III other system diagnosis code.

Q: Is diagnosis code No. U1100 is set to other ECU?
- **YES :** Replace the EV-ECU.
- **NO :** Go to Step 5.

<Old>
~~**STEP 5. M.U.T.-III diagnosis code**~~

Q: Is the diagnosis code set?

<New>
STEP 5. Diagnosis code recheck
Check again if the diagnosis code is set to the on board charger.
(1)Erase the stored diagnosis code.
(2)Perform the regular charge.
(3)Check if the diagnosis code is set.

Code No. U1100: EV ECU CAN Timeout (1)

TROUBLE JUDGEMENT

Check Condition
- While the on board charger is allowed to be charged from the EV-ECU. <On board charger>

or
- EV-ECU is being activated <DC-DC converter>

Judgement Criterion
- The CAN communication data cannot be received from the EV-ECU.

FAIL-SAFE AND BACKUP FUNCTION <Old>
~~- The charge is stopped.~~

or
~~- The output of DC-DC converter is restricted.~~

PROBABLE CAUSES
- The CAN bus is failed.
- The EV-ECU is failed.
- The on board charger is failed.

or
- The DC-DC converter is failed.

DIAGNOSIS PROCEDURE

STEP 1. M.U.T.-III CAN bus diagnosis
- Using M.U.T.-III, perform CAN bus line diagnosis.

Q: Is the check result normal? <New>

INSPECTION CHART FOR TROUBLE SYMPTOMS

Item	Trouble Symptom	Inspection Procedure No.
Communication with M.U.T.-III	Communications cannot be done between M.U.T.-III and on board charger	1
Auxiliary battery charge warning indicator	Charge warning lamp of auxiliary battery lit in READY status	2
Charging cable (charging circuit interrupting device) <Old>	Although regular charging is possible, READY indicator (green lamp) and CHARGE indicator (green lamp) are not lit.	3
	READY indicator (green lamp) is not lit. (Regular charging is impossible.)	4
	Although READY indicator (green lamp) is lit, CHARGE indicator (green lamp) is not lit. (Regular charging is impossible.)	5
	Although READY indicator (green lamp) and CHARGE indicator (green lamp) are lit, regular charging is impossible.	6
	FAULT indicator (red lamp) is lit.	7
	FAULT indicator (red lamp) blinks.	8
	READY indicator (green lamp) blinks.	9

PROBLEM SYMPTOMS TABLE

Inspection Procedure No.	Inspection Item	Reference page
1	Communications cannot be done between M.U.T.-III and on board charger	From attached sheet 4 (28/49, 29/49) <New>
2 <Old>	Charge warning lamp of auxiliary battery lit in READY status	
3	Although regular charging is possible, READY indicator (green lamp) and CHARGE indicator (green lamp) are not lit.	
4	READY indicator (green lamp) is not lit. (Regular charging is impossible.)	
5	Although READY indicator (green lamp) is lit, CHARGE indicator (green lamp) is not lit. (Regular charging is impossible.)	
6	Although READY indicator (green lamp) and CHARGE indicator (green lamp) are lit, regular charging is impossible.	
7	FAULT indicator (red lamp) is lit.	
8	FAULT indicator (red lamp) blinks.	
9	READY indicator (green lamp) blinks.	
10	Power supply system of on board charger	
11	Charging does not start, or the charging indicator is not illuminated when the charger is connected to domestic power supply	

TSB Revision

Inspection Procedure No.	Inspection Item	Reference page
12	Charging time is longer than usual, or charging does not stop	
13	Domestic circuit breaker interrupts the power supply	
14	Electric shock	
15	Connect the charging cable, the charging indicator does not flash. (Electric motor switch is set to ON)	

<Old>

From attached sheet 4 (29/49)

<New>

TSB Revision

INSPECTION CHART FOR TROUBLE SYMPTOMS

Item	Trouble Symptom	Inspection Procedure No.
Communication with M.U.T.-III	Communications cannot be done between M.U.T.-III and on board charger	1
Auxiliary battery charge warning indicator	Charge warning lamp of auxiliary battery lit in READY status	2
Charging cable (charging circuit interrupting device)	Although regular charging is possible, POWER indicator and CHARGING indicator are not lit.	3
	POWER indicator is not lit. (Regular charging is impossible.)	4
	Although POWER indicator is lit, CHARGING indicator is not lit. (Regular charging is impossible.)	5
	Although POWER indicator and CHARGING indicator are lit, regular charging is impossible.	6
	FAULT indicator is lit.	7
	FAULT indicator blinks.	8
	POWER indicator and FAULT indicator flash.	9
<New>	When "manual stop" is pressed, the regular charging does not terminate or the STOP indicator does not illuminate.	10
	STOP indicator is lit, and regular charging is impossible.	11
	The STOP indicator does not illuminate when "manual stop" is pressed (The regular charging terminates).	12

PROBLEM SYMPTOMS TABLE

Inspection Procedure No.	Inspection Item	Reference page
1	Communications cannot be done between M.U.T.-III and on board charger	
2 <New>	Charge warning lamp of auxiliary battery lit in READY status	
3	Although regular charging is possible, POWER indicator and CHARGING indicator are not lit.	
4	POWER indicator is not lit. (Regular charging is impossible.)	
5	Although POWER indicator is lit, CHARGING indicator is not lit. (Regular charging is impossible.)	
6	Although POWER indicator and CHARGING indicator are lit, regular charging is impossible.	
7	FAULT indicator is lit.	
8	FAULT indicator blinks.	
9	POWER indicator and FAULT indicator flash.	

To attached sheet 4 (26/49)

<Old>

TSB Revision

Inspection Procedure No.	Inspection Item	Reference page
10	When "manual stop" is pressed, the regular charging does not terminate or the STOP indicator does not illuminate.	
11	STOP indicator is lit, and regular charging is impossible.	
12	The STOP indicator does not illuminate when "manual stop" is pressed (The regular charging terminates).	
13	Power supply system of on board charger	
14	Charging does not start, or the charging indicator is not illuminated when the charger is connected to domestic power supply	
15	Charging time is longer than usual, or charging does not stop	
16	Domestic circuit breaker interrupts the power supply	
17	Electric shock	
18	Connect the charging cable, the charging indicator does not flash. (Electric motor switch is set to ON)	

<New>

To attached sheet 10 (26/49, 27/49)

<Old>

TSB Revision

YES : Go to Step 20
NO : Replace the on board charger/DC-DC converter and the fuse.

<Old>

STEP 20. Connector check: G-24 inverter and on board charger/DC-DC converter combination (+ terminal) connector, G-06 inverter (+ terminal) connector

Q: Is the check result normal?
YES : Go to Step 21.
NO : Repair.

<New>

STEP 20. Connector check: G-24 inverter (+ terminal) connecor

STEP 21. Check harness between G-24 (terminal No. 1) inverter and on board charger/DC-DC converter combination (+ terminal) connector and G-06 (terminal No. 1) inverter (+ terminal) connector
- Check power supply line for open circuit and damage.

Q: Is the check result normal?

<Old>

YES : Go to Step 22.
NO : Repair.

<Old>

STEP 22. Connector check: G-25 inverter and on board charger/DC-DC converter combination (– terminal) connector, G-05 inverter (– terminal) connector

Q: Is the check result normal?
YES : Go to Step 23.
NO : Repair.

<New>

STEP 22. Connector check: G-25 inverter (- terminal) connector

STEP 23. Check harness between G-25 (terminal No. 1) inverter and on board charger/DC-DC converter combination (– terminal) connector and G-05 (terminal No. 1) inverter (– terminal) connector
- Check power supply line for open circuit and damage.

Q: Is the check result normal?
YES : Go to Step 7.
NO : Repair.

<Old>

Inspection Procedure 3: Although regular charging is possible, READY indicator (green lamp) and CHARGE indicator (green lamp) are not lit.

COMMENTS ON TROUBLE SYMPTOM
If the READY indicator (green lamp) and the CHARGE indicator (green lamp) are not lit although the regular charging is enabled, the indicator circuit may be failed.

PROBABLE CAUSE
- The charging cable is failed.

DIAGNOSIS PROCEDURE

STEP 1. Check the trouble symptom
- Connect the charging cable with home sockets. At that time, check that the READY indicator (green lamp) is lit, also the CHARGE indicator (orange lamp) and the FAULT indicator (red lamp) are momentarily lit.

Q: Does the trouble symptom persist?
YES : Replace the charging cable.
NO : Intermittent malfunction (Refer to GROUP 00 – How to Use Troubleshooting/ Inspection Service Points – How to Cope with Intermittent Malfunctions).

<New>

<New>

STEP 21. Check harness between G-24 inverter (+ terminal) connector and on board charger/DC-DC converter connector
・Check power supply line for open circuit and damage.
Q: Is the check result normal?
YES: Go to Step 22.
NO: Repair or replace the inverter and on board charger/DC-DC converter.

<New>

STEP 23. Check harness between G-25 inverter (- terminal) and inverter and on board charger/DC-DC converter connector
・Check power supply line for open circuit and damage.
Q: Is the check result normal?
YES: Go to Step 7.
NO: Repair or replace the inverter and on board charger/DC-DC converter.

Inspection Procedure 3: Although regular charging is possible, READY indicator (green lamp) and CHARGE indicator (green lamp) are not lit.

COMMENTS ON TROUBLE SYMPTOM
If the READY indicator (green lamp) and the CHARGE indicator (green lamp) are not lit although the regular charging is enabled, the indicator circuit may be failed.

PROBABLE CAUSE
- The charging cable is failed.

DIAGNOSIS PROCEDURE

STEP 1. Check the trouble symptom
- Connect the charging cable with home sockets.

At that time, check that the READY indicator (green lamp) is lit, also the CHARGE indicator (orange lamp) and the FAULT indicator (red lamp) are momentarily lit.

Q: Does the trouble symptom persist?
YES : Replace the charging cable.
NO : Intermittent malfunction (Refer to GROUP 00 – How to Use Troubleshooting/ Inspection Service Points – How to Cope with Intermittent Malfunctions).

<Old>

<New>

From attached sheet 4 (32/49)

TSB Revision

Inspection Procedure 3: Although regular charging is possible, POWER indicator and CHARGING indicator are not lit.

COMMENTS ON TROUBLE SYMPTOM
If the POWER indicator and the CHARGING indicator are not lit although the regular charging is enabled, the indicator circuit may be failed.

PROBABLE CAUSE
- The charging cable is failed.

DIAGNOSIS PROCEDURE

STEP 1. Check the trouble symptom
- Connect the charging cable with home sockets.

At that time, check that the POWER indicator is lit, also the CHARGING indicator and the FAULT indicator are momentarily lit.

Q: Does the trouble symptom persist?
YES : Replace the charging cable.
NO : Intermittent malfunction (Refer to GROUP 00 – How to Use Troubleshooting/ Inspection Service Points – How to Cope with Intermittent Malfunctions).

<New>

<Old>

To attached sheet 4 (31/49)

TSB Revision

Inspection Procedure 4: READY indicator (green lamp) is not lit. (Regular charging is impossible.)

COMMENTS ON TROUBLE SYMPTOM

When the charging cable is connected with home sockets, the READY indicator (green lamp) of the charging circuit interrupting device should be lit. If the READY indicator (green lamp) is not lit, the AC power supply (supply side) or the charging cable may be failed.

PROBABLE CAUSES

- The AC power supply (supply side) is failed.
- The charging cable is failed.

DIAGNOSIS PROCEDURE

STEP 1. Check the emergency stop switch

- Check whether the emergency stop switch is pressed.

Q: Does the trouble symptom persist?

YES : Go to Step 2

NO : Check the charging circuit interrupting device.

STEP 2. Check the trouble symptom

- Connect the charging cable with home sockets. At that time, check that the READY indicator (green lamp) is lit, also the CHARGE indicator (green lamp) and the FAULT indicator (red lamp) are momentarily lit.

Q: Does the trouble symptom persist?

YES : Replace the charging cable.

NO : Check the AC power supply usage conditions used by the users.

<Old>

<New>

From attached sheet 4 (32/49)

TSB Revision

Inspection Procedure 4: POWER indicator is not lit. (Regular charging is impossible.)

COMMENTS ON TROUBLE SYMPTOM

When the charging cable is connected with electrical outlets, the POWER indicator should be lit. If the POWER indicator is not lit, the AC power supply (supply side) or the charging cable may be failed.

PROBABLE CAUSES

- The AC power supply (supply side) is failed.
- The charging cable is failed.

DIAGNOSIS PROCEDURE

STEP 1. Check the trouble symptom

- Connect the charging cable with electrical outlets. At that time, check that the POWER indicator is lit, also the CHARGING indicator and the FAULT indicator are momentarily lit.

Q: Does the trouble symptom persist?

YES : Replace the charging cable.

NO : Check the AC power supply usage conditions used by the users.

<New>

<Old>

To attached sheet 4 (33/49)

Inspection Procedure 5: Although READY indicator (green lamp) is lit, CHARGE indicator (green lamp) is not lit. (Regular charging is impossible.)

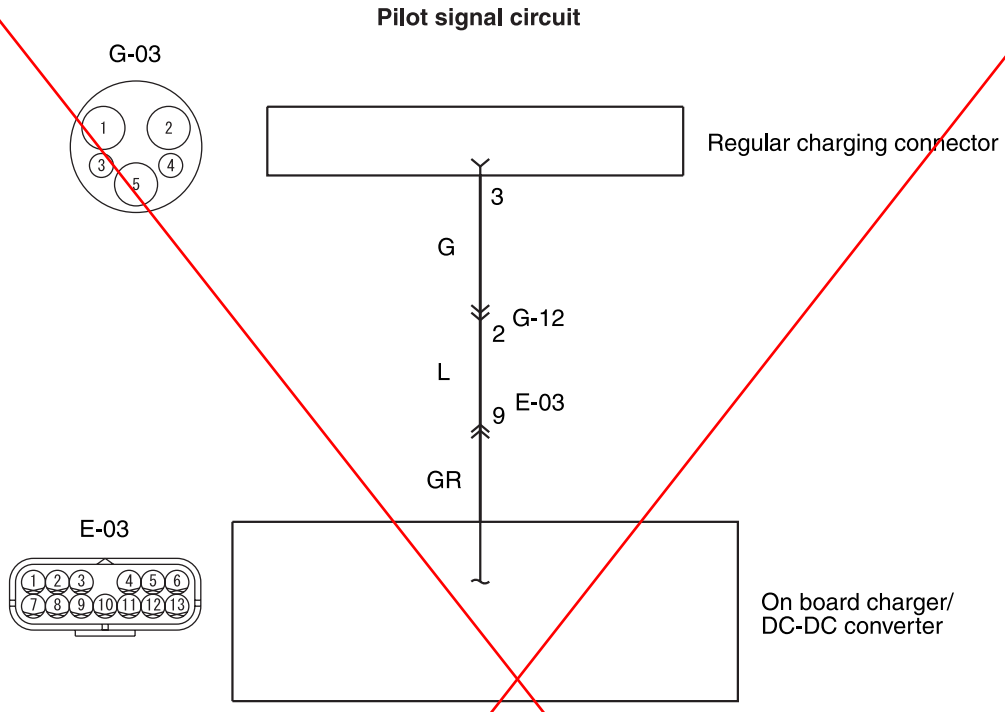

Wire colour code
B: Black LG: Light green G: Green L: Blue W: White Y: Yellow SB: Sky blue BR: Brown O: Orange GR: Grey
R: Red P: Pink V: Violet PU: Purple SI: Silver

AKB00015AB

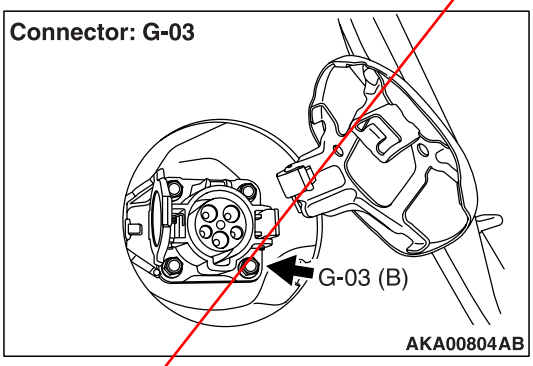

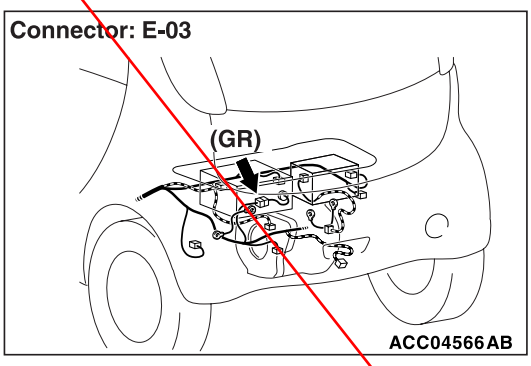

COMMENTS ON TROUBLE SYMPTOM
When the regular charging starts, the CHARGE indicator (green lamp) should be lit. When the traction battery is fully charged, the CHARGE indicator (green lamp) should be extinguished. If the CHARGE indicator (green lamp) is not lit even though the traction battery is not fully charged, the pilot signal from the regular charging may be failed.

PROBABLE CAUSES
- The charging cable is failed.
- Open circuits of pilot signal circuit and damage; poor contacts of connector
- The on board charger is failed.

<Old>
<New>
From attached sheet 4 (36/49)

TSB Revision

Inspection Procedure 5: Although POWER indicator is lit, CHARGING indicator is not lit. (Regular charging is impossible.)

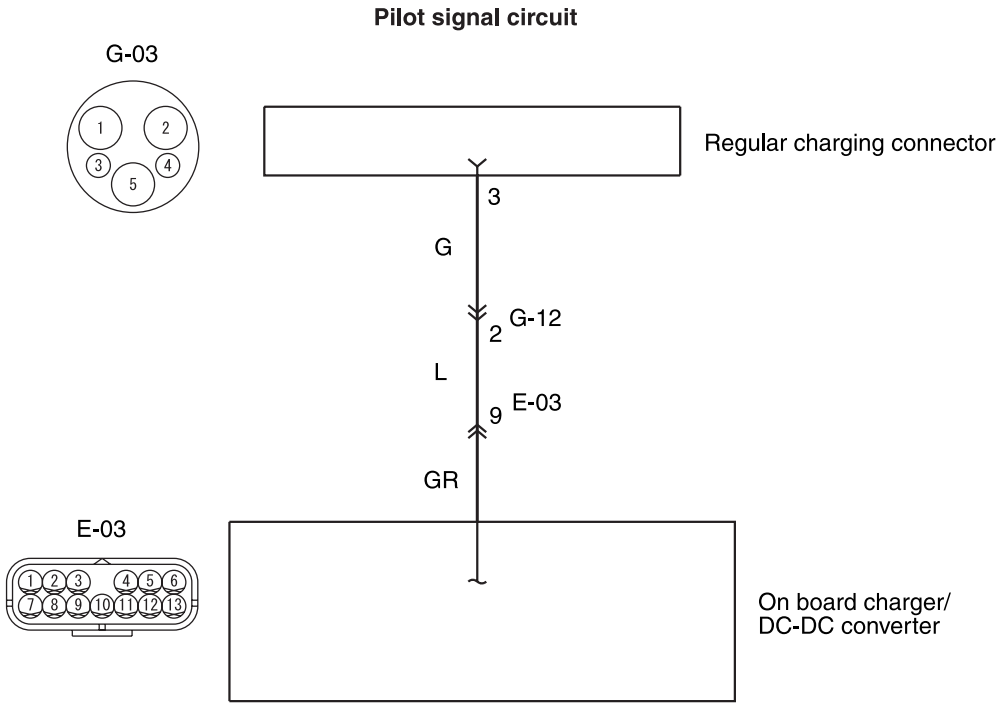

Wire colour code
B: Black LG: Light green G: Green L: Blue W: White Y: Yellow SB: Sky blue BR: Brown O: Orange GR: Grey
R: Red P: Pink V: Violet PU: Purple SI: Silver

AKB00015AB

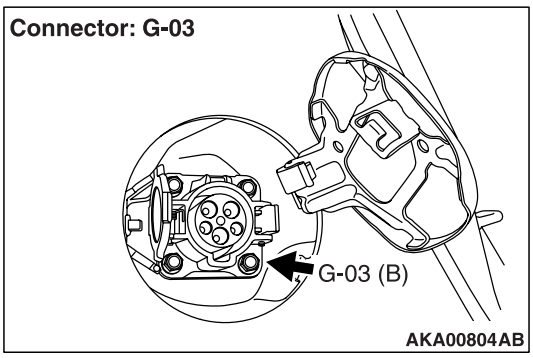

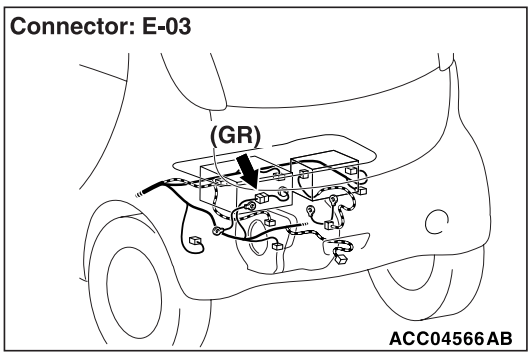

COMMENTS ON TROUBLE SYMPTOM

When the regular charging starts, the CHARGING indicator should be lit. When the traction battery is fully charged, the CHARGING indicator should be extinguished. If the CHARGING indicator is not lit even though the traction battery is not fully charged, the pilot signal from the regular charging may be failed.

PROBABLE CAUSES

- The charging cable is failed.
- Open circuits of pilot signal circuit and damage; poor contacts of connector
- The on board charger is failed.

<New>

<Old>

TSB Revision

To attached sheet 4 (35/49)

Inspection Procedure 6: Although READY indicator (green lamp) and CHARGE indicator (green lamp) are lit, regular charging is impossible.

<Old>

Regular charging connector signal circuit and regular charging high voltage system circuit

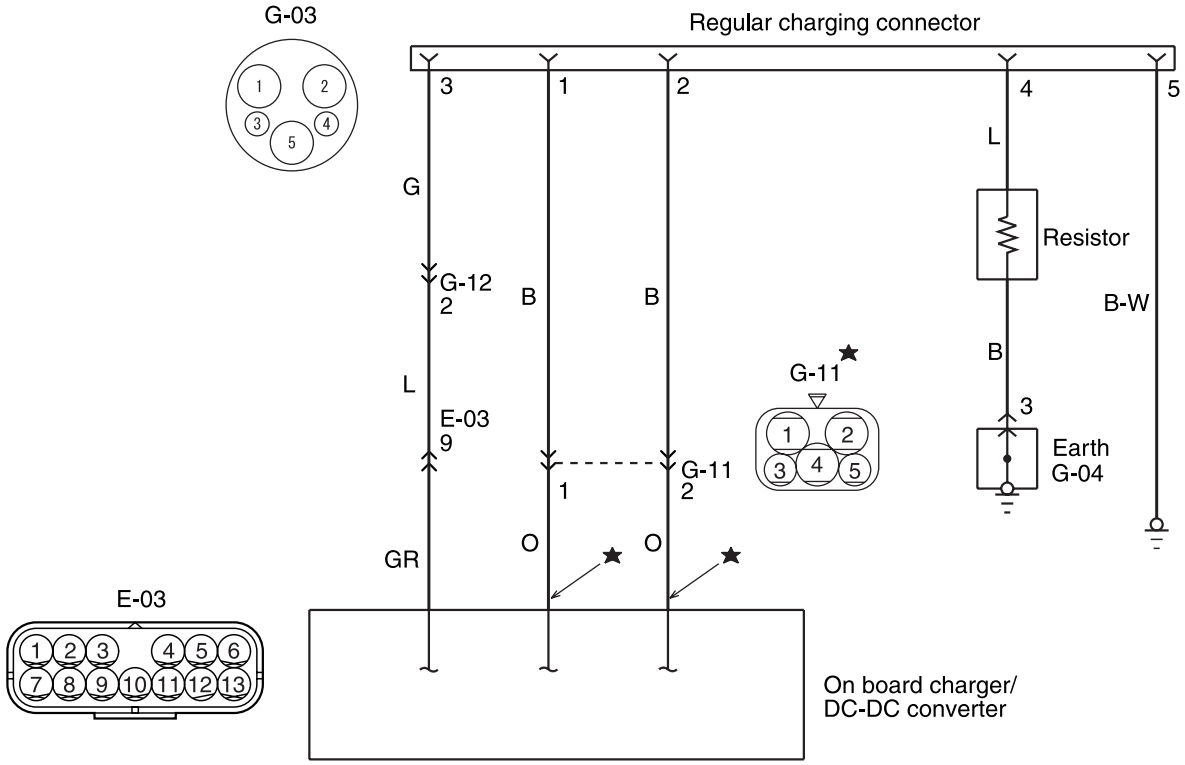

NOTE
★:Indicates the high voltage cables,
wiring harnesses or connectors.

Wire colour code
B: Black LG: Light green G: Green L: Blue W: White Y: Yellow SB: Sky blue BR: Brown O: Orange GR: Grey
R: Red P: Pink V: Violet PU: Purple SI: Silver

AKB00016AB

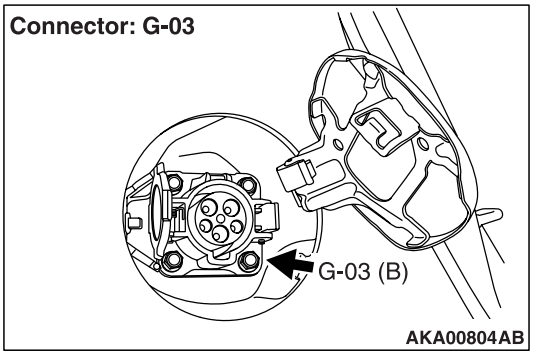

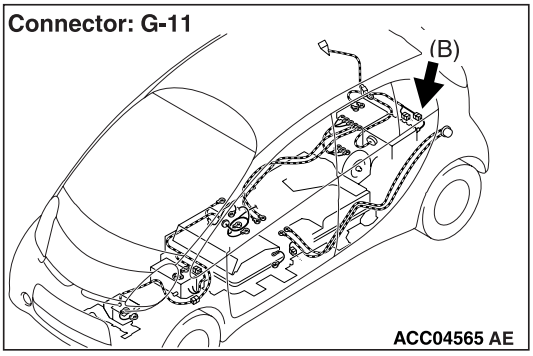

<New>

Inspection Procedure 6: Although POWER indicator and CHARGING indicator are lit, regular charging is impossible.

TSB Revision

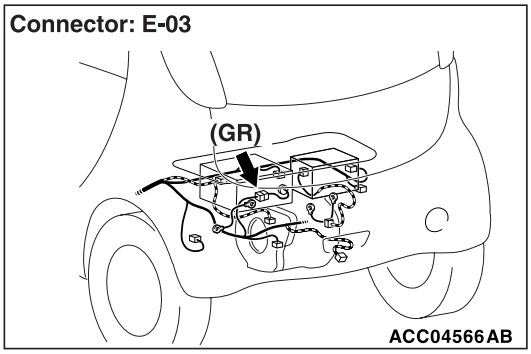

<New>

When the regular charging starts, the CHARGING indicator should be lit. When the traction battery is fully charged, the CHARGING indicator should be extinguished. If charging is disabled although the POWER indicator and the CHARGING indicator are lit, the regular charging connector connection signal circuits or the regular charging high voltage system circuits may be failed.

<Old>

~~**COMMENTS ON TROUBLE SYMPTOM**~~

~~When the regular charging starts, the CHARGE indicator (green lamp) should be lit. When the traction battery is fully charged, the CHARGE indicator (green lamp) should be extinguished. If charging is disabled although the READY indicator (green lamp) and the CHARGE indicator (green lamp) are lit, the regular charging connector connection signal circuits or the regular charging high voltage system circuits may be failed.~~

PROBABLE CAUSES

- The charging cable is failed.
- Open circuits of regular charging connector signal circuits, short circuits to earth and damage; poor contacts of connector
- Open circuits of regular charging high voltage system circuits or poor contacts of connector
- The on board charger is failed.

DIAGNOSIS PROCEDURE

DANGER

When high voltage system components are served, be sure to pull service plugs to shut down high voltage (Refer to).

DANGER

When pulling service plugs, wear the specified protective equipment (Refer to).

STEP 1. M.U.T.-III diagnosis code

Q: Is diagnosis code set?
YES : Inspection chart for diagnosis code (Refer to).
NO : Go to Step 2.

STEP 2. M.U.T.-III data list

- EV-ECU Data list reference table (Refer to).
  a. Item 207: OBC connecting signal

Q: Is the check result normal?
YES : Go to Step 9.
NO : Go to Step 3.

STEP 3. Check the regular charging plug built-in switch itself

- Check Charging Cable (Refer to).

Q: Is the check result normal?
YES : Go to Step 4.
NO : Replace the charging cable.

STEP 4. Connector check: G-03 regular charging connector and E-03 on board charger/DC-DC converter connector

Q: Are the check results normal?
YES : Go to Step 5.
NO : Repair or replace the connector.

STEP 5. Check harness between G-03 (terminal No. 3) regular charging connector and E-03 (terminal No. 9) on board charger/DC-DC converter connector.

NOTE: Before checking harness, check intermediate connector G-12, and repair if necessary.

- Check signal line for open circuits, short circuits to earth and damage.

Q: Is the check result normal?
YES : Go to Step 6.
NO : Repair the damaged harness wire.

STEP 6. Check harness between G-03 (terminal No. 4) regular charging connector and earth.

NOTE: Before checking harness, check intermediate connector G-04, and repair if necessary.

- Check earthing line for short circuit to earth.

NOTE: The resistor is built between the harnesses. When short circuits of the earth system occur in the

<Deleted>

Inspection Procedure 7: FAULT indicator (red lamp) is lit.

COMMENTS ON TROUBLE SYMPTOM

When detecting the internal circuit abnormalities, the charging circuit interrupting device should light the FAULT indicator (red lamp).

<Deleted>

PROBABLE CAUSE

- The charging cable is failed.

DIAGNOSIS PROCEDURE

STEP 1. Check the trouble symptom.

Q: Does the trouble symptom persist?

YES : Replace the charging cable.

NO : Intermittent malfunction (Refer to GROUP 00 – How to Use Troubleshooting/ Inspection Service Points – How to Cope with Intermittent Malfunctions).

TSB Revision

<Deleted>

Inspection Procedure 8: FAULT indicator (red lamp) blinks.

Regular charging connector signal circuit and regular charging high voltage system circuit

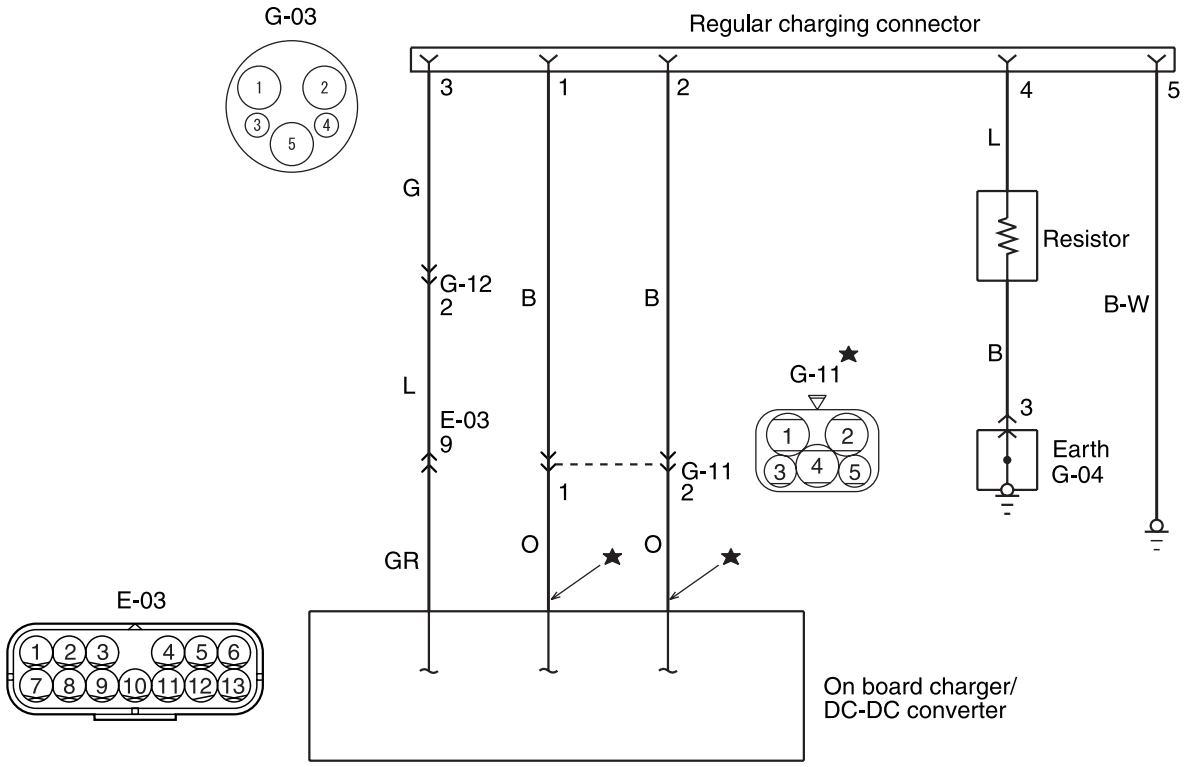

NOTE
★:Indicates the high voltage cables, wiring harnesses or connectors.

Wire colour code
B: Black LG: Light green G: Green L: Blue W: White Y: Yellow SB: Sky blue BR: Brown O: Orange GR: Grey
R: Red P: Pink V: Violet PU: Purple SI: Silver

AKB00016AB

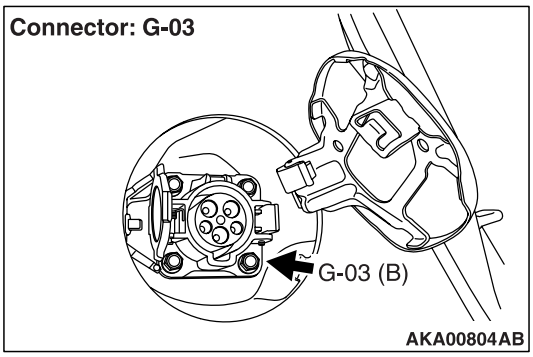

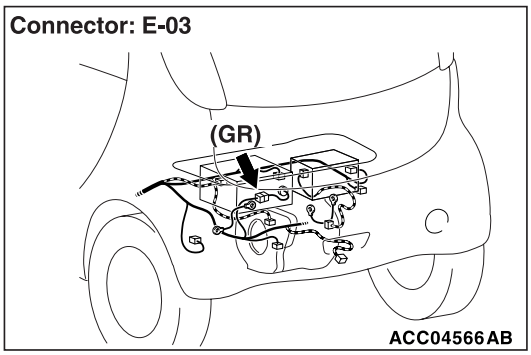

TSB Revision

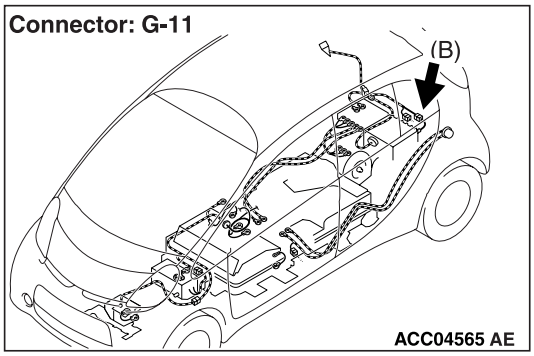

COMMENTS ON TROUBLE SYMPTOM
When detecting pilot signal abnormalities or earth leakages of regular charging high voltage circuits, the charging circuit interrupting device should blink the FAULT indicator (~~red lamp~~). <Deleted>

PROBABLE CAUSE
- The charging cable is failed.
- Earth leakage of regular charging high voltage system circuits.
- Short circuit to earth of pilot signal circuit.
- The on board charger is failed.

DIAGNOSIS PROCEDURE

DANGER
When high voltage system components are served, be sure to pull service plugs to shut down high voltage (Refer to).

DANGER
When pulling service plugs, wear the specified protective equipment (Refer to).

STEP 1. Check charging cable itself
- Check Charging Cable (Refer to).

Q: Is the check result normal?
YES : Go to Step 2.
NO : Replace the charging cable.

STEP 2. Connector check: G-03 regular charging connector and E-03 on board charger/DC-DC converter connector

Q: Are the check results normal?
YES : Go to Step 3.
NO : Repair or replace the connector.

STEP 3. Check harness between G-03 (terminal No. 3) regular charging connector and E-03 (terminal No. 9) on board charger/DC-DC converter.

NOTE: Before checking harness, check intermediate connector G-12, and repair if necessary.
- Check signal line for short circuits to earth.

Q: Is the check result normal?
YES : Go to Step 4.
NO : Repair the damaged harness wire.

STEP 4. Connector check: G-11 on board charger/DC-DC converter connector

DANGER
When high voltage system components are served, be sure to pull service plugs to shut down high voltage (Refer to).

DANGER
When pulling service plugs, wear the specified protective equipment (Refer to).

Q: Is the check result normal?
YES : Go to Step 5.
NO : Repair or replace the connector.

STEP 5. Check the G-03 regular charging connector for the insulation resistance.

CAUTION
When the insulation resistance is measured, set the range of the special tool electric insulation tester (MB992355) to 500 V. When the insulation resistance is measured at the range more than 500 V, the component may be damaged.
- Disconnect connector, and measure at harness side.
- Disconnect G-11 on board charger/DC-DC converter connector.
- Use special tool electric insulation tester (MB992355), to set the range to 500 V.
- Insulation resistance between terminal No. 1 and

TSB Revision

Inspection Procedure 9: READY indicator (green lamp) blinks.

COMMENTS ON TROUBLE SYMPTOM
When detecting abnormalities in the earth of the electrical outlets, the charging circuit interrupting device should blink the READY indicator (green lamp).

PROBABLE CAUSES
- The AC power supply (supply side) is failed.
- The charging cable is failed.

DIAGNOSIS PROCEDURE

STEP 1. Check the trouble symptom
- Connect the charging cable with the electrical outlets. At that time, check the READY indicator (green lamp) blinks.

Q: Does the trouble symptom persist?
YES : Replace the charging cable.
NO : Check the earth usage conditions of the AC power supply the user uses for charging.

<Old>

<New>

From attached sheet 4 (43/49)

TSB Revision

Inspection Procedure 9: POWER indicator and FAULT indicator flash.

COMMENTS ON TROUBLE SYMPTOM
When detecting abnormalities in the ground of the electrical outlets, the POWER indicator and FAULT indicator should be blink.

PROBABLE CAUSES
- The AC power supply (supply side) is failed.
- The charging cable is failed.

DIAGNOSIS PROCEDURE

STEP 1. Check the trouble symptom
- Connect the charging cable with the electrical outlets. At that time, check the POWER indicator and FAULT indicator blinks.

Q: Does the trouble symptom persist?
YES : Replace the charging cable.
NO : Check the earth usage conditions of the AC power supply the user uses for charging.

<New>

<Old>

To attached sheet 4 (42/49)

TSB Revision

Inspection Procedure 9: READY indicator (green lamp) blinks.

COMMENTS ON TROUBLE SYMPTOM
When detecting abnormalities in the earth of the electrical outlets, the charging circuit interrupting device should blink the READY indicator (green lamp).

PROBABLE CAUSES
- The AC power supply (supply side) is failed.
- The charging cable is failed.

DIAGNOSIS PROCEDURE

STEP 1. Check the trouble symptom
- Connect the charging cable with the electrical outlets. At that time, check the READY indicator (green lamp) blinks.

Q: Does the trouble symptom persist?
YES : Replace the charging cable.
NO : Check the earth usage conditions of the AC power supply the user uses for charging.

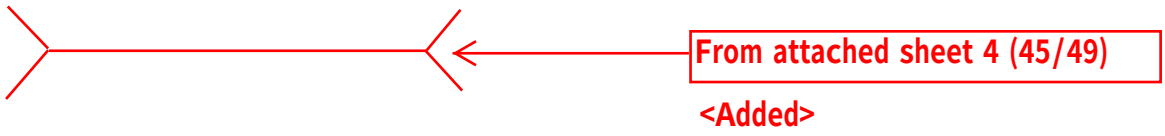

TSB Revision

Inspection Procedure 10: When "manual stop" is pressed, the regular charging does not terminate or the STOP indicator does not illuminate.

COMMENTS ON TROUBLE SYMPTOM
The charging cable may be defective if the regular charging does not terminate or the STOP indicator does not illuminate when "manual stop" is pressed.

PROBABLE CAUSES
- The charging cable is failed.

DIAGNOSIS PROCEDURE

STEP 1. Check the trouble symptom
- The regular charging should terminate or the STOP indicator should illuminate when "manual stop" is pressed.

Q: Does the trouble symptom persist?
YES : Replace the charging cable.
NO : Intermittent malfunction (Refer to GROUP 00 – How to Use Troubleshooting/ Inspection Service Points – How to Cope with Intermittent Malfunctions).

Inspection Procedure 11: Stop indicator is lit, and regular charging is impossible.

COMMENTS ON TROUBLE SYMPTOM
The charging cable may be defective when the STOP indicator illuminates and the regular charging is impossible although "manual stop" is not pressed.

PROBABLE CAUSES
- The charging cable is failed.

DIAGNOSIS PROCEDURE

STEP 1. Check the trouble symptom
- Connect the charging cable with home sockets. At that time, the POWER indicator should illuminate and the STOP indicator should not illuminate.

Q: Does the trouble symptom persist?
YES : Replace the charging cable.
NO : Intermittent malfunction (Refer to GROUP 00 – How to Use Troubleshooting/ Inspection Service Points – How to Cope with Intermittent Malfunctions).

Inspection Procedure 12: The STOP indicator does not illuminate when "manual stop" is pressed (The regular charging terminates).

COMMENTS ON TROUBLE SYMPTOM
The indicator circuit may be defective if the regular charging terminates but the STOP indicator does not illuminate when "manual stop" is pressed.

PROBABLE CAUSES
- The charging cable is failed.

DIAGNOSIS PROCEDURE

STEP 1. Check the trouble symptom
- When "manual stop" is pressed, the regular charging should terminate and the STOP indicator should illuminate.

Q: Does the trouble symptom persist?
YES : Replace the charging cable.
NO : Check the AC power supply usage conditions used by the users.

situation. However, the values vary widely according to the minor differences of the measurement condition, the environmental differences, vehicle aging, or other factors, and offering the precise normal value is difficult. Therefore, only the check conditions, the display range, and the numerical change shall be listed.

<New> 200 - 260 V

Item No.	M.U.T.-III display	Item explanation	Inspection conditions	Display range
7	Input voltage	Displays the input voltage from power supply for home use.	• Electric motor switch: "LOCK"(OFF) • During regular charging	~~70 V – 165 V~~ <Old>
8	Input current	Displays the input current from power supply for home use.	• Electric motor switch: "LOCK"(OFF) • During regular charging	~~15.2 A or less~~ <Old>
9	Output voltage	Displays the output voltage to traction battery.	• Electric motor switch: "LOCK"(OFF) • During regular charging	180 V – 370 V
10	Output current	Displays the output current to traction battery.	• Electric motor switch: "LOCK"(OFF) • During regular charging	10 A or less
12	Input frequency	Displays the input frequency from power supply for home use.	• Electric motor switch: "LOCK"(OFF) • During regular charging	48 Hz – 62 Hz
13	Pilot signal (Duty ratio)	Displays the Pilot signal (Duty ratio) of charging circuit interrupting device.	• Electric motor switch: "LOCK"(OFF) • During regular charging	8 % – 97 %
14	Pilot signal (Voltage)	Displays the Pilot signal (Voltage) of charging circuit interrupting device.	• Electric motor switch: "LOCK"(OFF) • During regular charging	12.6 V or less
15	Pilot signal (Frequency)	Displays the Pilot signal (Frequency) of charging circuit interrupting device.	• Electric motor switch: "LOCK"(OFF) • During regular charging	970 Hz – 1,030 Hz

15 A or less <New>

CHARGING CABLE CHECK

<Deleted>

Visual check

1. Check that the cable, the regular charging plug and the plug do not have damage, corrosion or rust. If they have damage, corrosion or rust, replace the charging cable.

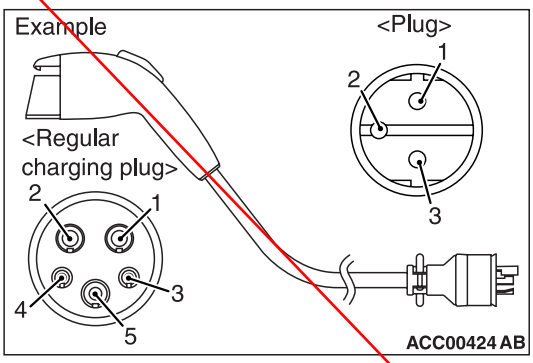

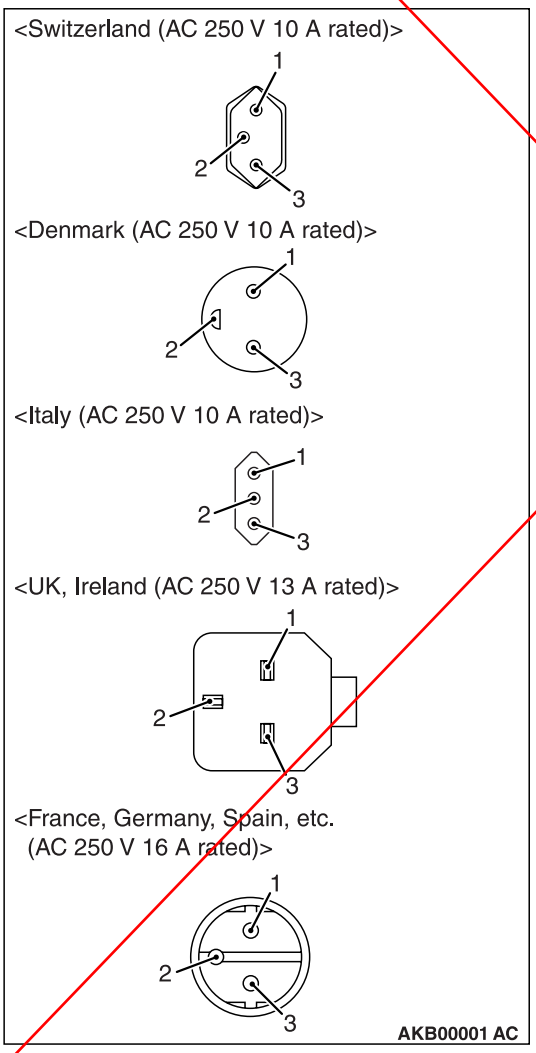

Continuity check

1. Check continuity between the plug earth terminal and the regular charging plug earth terminal.

Plug terminal	Regular charging plug terminal	Normal condition
No. 2	No. 5	Continuity

2. If no continuity, replace the regular charging cable.

TSB Revision

Check on insulation resistance

CAUTION

When the insulation resistance is measured, set the range of the special tool electric insulation tester (MB992355) to 500 V. When the insulation resistance is measured at the range more than 500 V, the component may be damaged.

1. Use the special tool electric insulation tester (MB992355) to measure the insulation resistance at the plug side with the range of 500 V.

   NOTE: The plug shape is different depending on the country. Perform the check according to the specification of each country, referring to the illustration.

<Old> <New> 250 V <Old> <Old>

Standard value:

Tester connection terminal	Standard value
1 – 2	1 MΩ or more
2 – 3	1 MΩ or more

<Old>

<New> 1 (L) - 2 (G)

2 (G) - 3 (N)

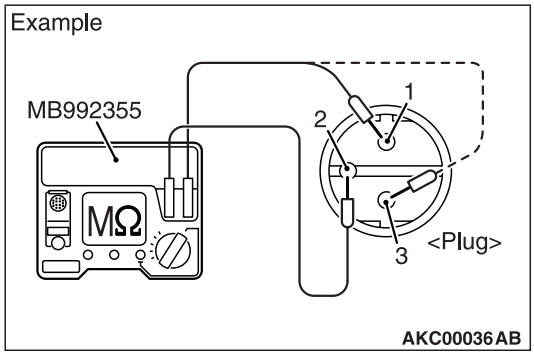

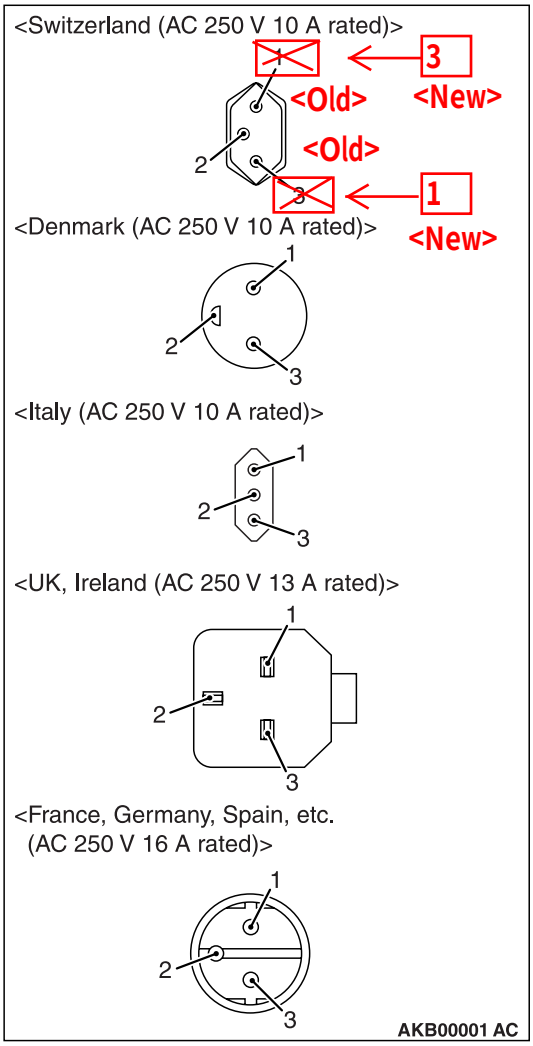

TSB Revision

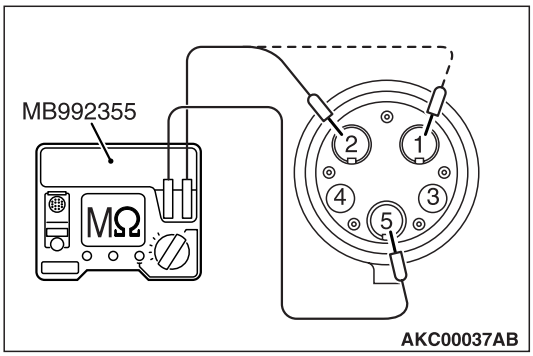

2. Use the special tool electric insulation tester (MB992355) to measure the insulation resistance at the regular charging plug side with the range of ~~500 V~~. 250 V

Standard value: <Old> <New>

Tester connection terminal	Standard value
1 – 5	1 MΩ or more
2 – 5	1 MΩ or more

3. If the resistance deviates from the standard value, replace the regular charging cable.

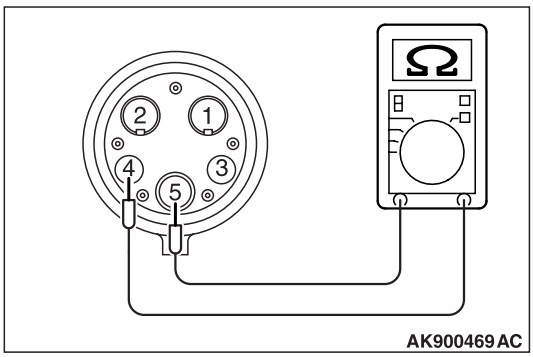

Check on regular charging plug built-in switch

1. Measure the resistance between the regular charging plug terminal No. 4 and the terminal No. 5.

standard value:

Regular charging plug release button	Normal condition
Without pressing release button	135 – 165 Ω (at 20°C)
With pressing release button	432 – 528 Ω (at 20°C)

2. If the resistance deviates from the standard value, replace the charging cable.

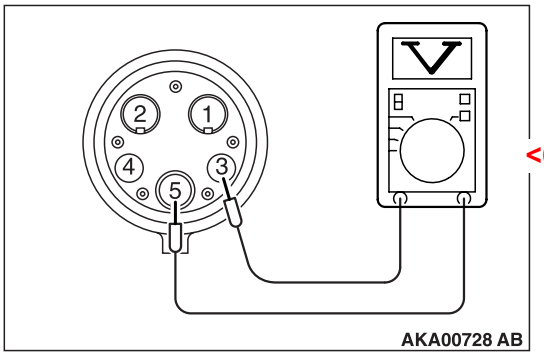

Check pilot signal terminal

1. Connect the charging cable with a home socket.
2. Use the analogue voltmeter from the regular charging plug side to connect the pilot signal terminal between the terminal No. 3 and the terminal No. 5. Measure the output voltage.

<Old> ~~**Standard value: approximately 12 V**~~

3. If the voltage deviates from the standard value, replace the charging cable.

Standard value: approximately 12V DC <New>

TSB Revision

Attached sheet 5 (1/34)

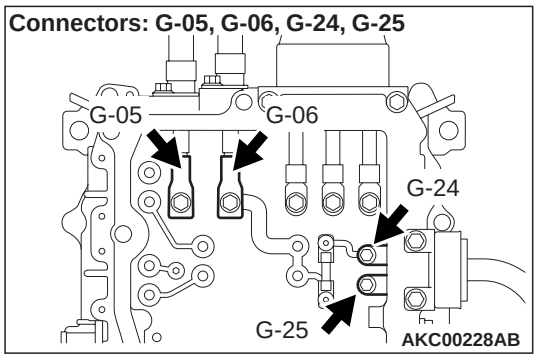

TROUBLE JUDGMENT

Check Conditions

- The EV-ECU allows the DC-DC converter to operate.

Judgment Criterion

- The input voltage is less than 180 V or more than 420 V.

FAIL-SAFE AND BACKUP FUNCTION

- The output of DC-DC converter is stopped.

<Added>

- Auxiliary battery is failed.
- High voltage system component of except DC-DC converter is failed.

PROBABLE CAUSES

- Fuse meltdown between DC-DC converter and inverter
- Open circuits or damage of high voltage circuits between DC-DC converter and Main Drive Lithium-ion Battery; or poor contact of connector
- The DC-DC converter is failed.

DIAGNOSIS

⚠ DANGER
When high voltage system components are served, be sure to pull service plugs to shut down high voltage.

⚠ DANGER
When pulling service plugs, wear the specified protective equipment.

STEP 1. Use scan tool MB991958 to confirm a DTC of other systems.

Q: Is the diagnostic trouble code of EV-ECU system stored?

YES : Check EV-ECU system.
NO : Go to Step 2.

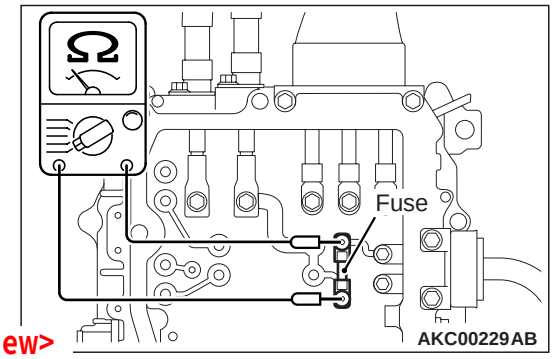

STEP 2. Continuity check on fuse between DC-DC converter and inverter

⚠ ***DANGER***

When high voltage system components are served, be sure to pull service plugs to shut down high voltage before serving.

⚠ ***DANGER***

When pulling service plugs, wear the specified protective equipment.

- Check continuity of fuse both ends.

  OK: Continuity

Q: Is the check result normal?

YES : Go to Step 3.
NO : Replace the fuse.

<New>

STEP 3. Connector check: G-24 inverter (+ terminal), G-25 inverter (- terminal), G-06 inverter (+ terminal), G-05 inverter (- terminal) connector

<New>

STEP 4. Check harness between G-24 inverter (+ terminal) connector, G-25 inverter (- terminal) and inverter and on board charger/DC-DC converter connector
・Check power supply line for open circuit and damage.
Q: Is the check result normal?
YES: Go to Step 5.
NO: Repair or replace the inverter and on board charger/DC-DC converter.

<New>

STEP 5. Check harness between G-06 inverter (+ terminal) connector, G-05 inverter (- terminal) and G-19 main drive lithium-ion battery (+ terminal) connector, G-18 main drive lithium-ion battery (- terminal) connector
・Check power supply line for open circuit and damage.
Q: Is the check result normal?
YES: Go to Step 5.
NO: Repair or replace the main drive lithium-ion battery cable.

<New>

STEP 6. Recheck for diagnostic trouble code
Check again if the DTC is stored in the DC-DC converter.
(1)Erase the DTC.
(2)Set the electric motor switch from the "LOCK" (OFF) position to the "ON", and then to the "START" position temporarily.
(3)Check if the DTC is stored.
Q: Is the DTC set?

<Old>

~~**STEP 3. Connector check: G-24 inverter and on board charger/DC-DC converter combination (+ terminal) connector, G-25 inverter and on board charger/DC-DC converter combination (– terminal) connector, G-05 inverter (– terminal) connector, G-06 inverter (+ terminal) connector**~~

Q: Is the check result normal?

YES : Go to Step 4.
NO : Repair.

<Old>

~~**STEP 4. Check harness between G-24 (terminal No. 1) inverter and on board charger/DC-DC converter combination (+ terminal) connector and G-06 (terminal No. 1) inverter (+ terminal) connector**~~

- ~~Check power supply line for open circuit and damage.~~

~~**Q: Is the check result normal?**~~

~~**YES :** Go to Step 5.~~
~~**NO :** Repair.~~

~~**STEP 5. Check harness between G-25 (terminal No. 1) inverter and on board charger/DC-DC converter combination (– terminal) connector and G-05 (terminal No. 1) inverter (– terminal) connector**~~

- ~~Check power supply line for open circuit and damage.~~

~~**Q: Is the check result normal?**~~

~~**YES :** Go to Step 6.~~
~~**NO :** Repair.~~

~~**STEP 6. Use scan tool MB991958 to confirm a DTC.**~~

~~**Q: Is the diagnostic trouble code stored?**~~

YES : Replace the on board charger/DC-DC converter. <Old>
NO : Intermittent malfunction (Refer to GROUP 00 – How to Use Troubleshooting/Inspection Service Points – How to Cope with Intermittent Malfunctions).

Attached sheet 5 (3/34)

Code No. P1C02: DCDC Output Voltage Abnormal
Code No. P1C22: DCDC Output Voltage Abnormal (2)

TROUBLE JUDGMENT

Check Conditions

- The EV-ECU allows the DC-DC converter to operate.

Judgment Criterion

- The output (B terminal) voltage is more than 16.0 V. <P1C02>
- The system detects a failure "overvoltage abnormal detection circuit" in the output section by predetermined times or more.<P1C22>

FAIL-SAFE AND BACKUP FUNCTION

- The output of DC-DC converter is stopped.

PROBABLE CAUSE

- The DC-DC converter is failed.

DIAGNOSIS

<Old>

~~**STEP 1. Use scan tool MB991958 to confirm a DTC.**~~

~~**Q: Is the diagnostic trouble code stored?**~~

YES : Replace the on board charger/DC-DC converter.

NO : Intermittent malfunction (Refer to GROUP 00 – How to Use Troubleshooting/Inspection Service Points – How to Cope with Intermittent Malfunctions).

<New>

STEP 1. Recheck for diagnostic trouble code
Check again if the DTC is stored in the DC-DC converter.
(1)Erase the DTC.
(2)Set the electric motor switch from the "LOCK" (OFF) position to the "ON", and then to the "START" position temporarily.
(3)Check if the DTC is stored.
Q: Is the DTC set?

TSB Revision

Attached sheet 5 (4/34)

Code No. P1C04: DCDC Output Voltage Reduction

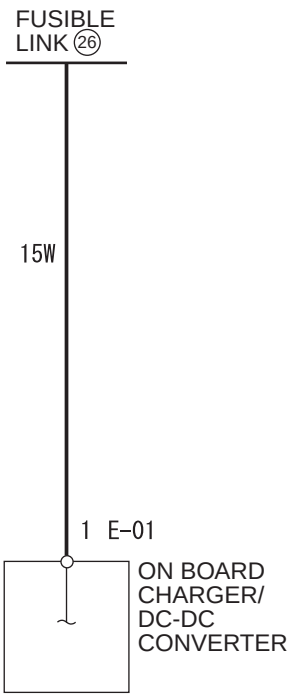

Wire colour code
B : Black LG : Light green G : Green L : Blue W : White Y : Yellow SB : Sky blue
BR : Brown O : Orange GR : Grey R : Red P : Pink V : Violet PU : Purple SI : Silver

AKC00216

Connector: E-01

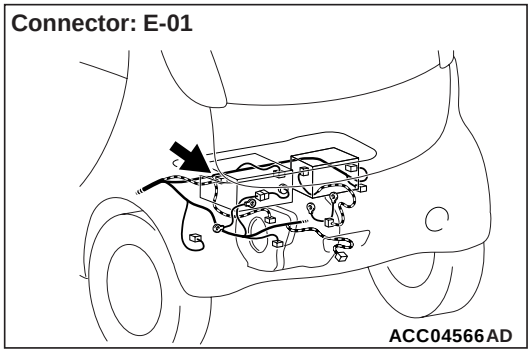

TROUBLE JUDGMENT

Check Conditions

- The EV-ECU allows the DC-DC converter to operate.

Judgment Criterion

- The output (B terminal) voltage is less than 11.0 V.

FAIL-SAFE AND BACKUP FUNCTION

- The output of DC-DC converter is restricted.

<Old>

PROBABLE CAUSES

- ~~Damaged wiring harness or connector(s)~~
- The DC-DC converter is failed.

<New>

- 12V stater battery is failed
- The installation of the 12V stater battery terminal is failed.
- The fusible link is fused.
- Open circuits of output (B terminal) voltage, damage or poor contact of connector

TSB Revision

Attached sheet 5 (5/34)

DIAGNOSIS

<New> STEP 2.

<Old> ~~STEP 1.~~ **Connector check: E-01 on board charger/DC-DC converter connecter, fusible link (No. 26)**

Check the terminals for deformation, looseness, etc.

<Old>

Q: Is the check result normal?

YES : Go to ~~Step 2~~ ← Step 3 <New>

NO : Repair the damaged connector.

<Old>

<New> STEP 3.

~~STEP 2.~~ **Check the wiring harness between E-01 on board charger/DC-DC converter connector terminal No. 1 and the fusible link (No. 26).**

Check the power supply line for open, short circuit and damage.

<Old>

Q: Is the check result normal?

YES : Go to ~~Step 3~~ ← Step 4 <New>

NO : Repair the wiring harness.

<Old> ~~**STEP 3. Use scan tool MB991958 to confirm a DTC.**~~

~~**Q: Is the diagnostic trouble code stored?**~~

YES : Replace the on board charger/DC-DC converter.

NO : Intermittent malfunction (Refer to GROUP 00 – How to Use Troubleshooting/Inspection Service Points – How to Cope with Intermittent Malfunctions).

<Added>

STEP 1. Check 12V Stater Battery

・Check 12V Stater Battery (Refer to GROUP 54A - Auxiliary Battery - On-vehicle Service - Battery Test)

Q: Is the check result normal?

YES: Go to Step 2.

NO: Replace the 12V Stater Battery.

<New>

STEP 4. Recheck for diagnostic trouble code

Check again if the DTC is stored in the DC-DC converter.

(1)Erase the DTC.

(2)Set the electric motor switch from the "LOCK" (OFF) position to the "ON", and then to the "START" position temporarily.

(3)Check if the DTC is stored.

Q: Is the DTC set?

TSB Revision

Attached sheet 5 (6/34)

STEP 3. Connector check: E-03 on board charger/DC-DC converter connecter, A-08X EV control relay (relay box) connecter

Q: Is the check result normal?

YES : Go to Step 4.
NO : Repair the damaged connector. Correct or replace the relay box.

STEP 5. Recheck for diagnostic trouble code
Check again if the DTC is stored in the DC-DC converter.
(1)Erase the DTC.
(2)Set the electric motor switch from the "LOCK" (OFF) position to the "ON", and then to the "START" position temporarily.
(3)Check if the DTC is stored.
Q: Is the DTC set?

<New>

STEP 4. Check the wiring harness between A-08X EV control relay (relay box) connector terminal No. 1 and E-03 on board charger/DC-DC converter connector terminal No. 8.

Check the power supply line for open, short circuit and damage.

Q: Is the check result normal?

YES : Go to Step 5.
NO : Repair the wiring harness.

<Old>

~~**STEP 5. Use scan tool MB991958 to confirm a DTC.**~~

~~**Q: Is the diagnostic trouble code stored?**~~

YES : Replace the on board charger/DC-DC converter.
NO : Intermittent malfunction (Refer to GROUP 00 – How to Use Troubleshooting/Inspection Service Points – How to Cope with Intermittent Malfunctions).

Code No. P1C08: DCDC Rectifier Temperature
Code No. P1C09: DCDC Inside Temperature

TROUBLE JUDGMENT

Check Conditions

- The EV-ECU allows the DC-DC converter to operate.

Judgment Criterion

- The rectification area temperature sensor is more than 105° C (221° F). <P1C08>
- The temperature sensor in the DC-DC converter is more than 105° C (221° F). <P1C09>

FAIL-SAFE AND BACKUP FUNCTION

- The output of DC-DC converter is stopped.

・EV-ECU is failed.

PROBABLE CAUSES

- There is not enough coolant.
- The water pump is failed.
- The radiator fan is failed.
- The temperature sensor installed in the DC-DC converter is failed.

TSB Revision

Attached sheet 5 (7/34)

DIAGNOSIS

STEP 1. Use scan tool MB991958 to confirm a DTC of other systems.

Q: Is diagnostic trouble code of EV-ECU system stored?

YES : Check EV-ECU system.
NO : Go to Step 2.

STEP 2. Check the coolant.

NOTE: If the coolant largely decreases, check whether the coolant leakage exists or not. Repair it if necessary.

- Check on coolant (Refer to GROUP 14 – On-vehicle Service – Coolant Check).

Q: Is the check result normal?

YES : Go to Step 3.
NO : Replace or supply the coolant.

STEP 3. Scan tool MB991958 actuator test

- Refer to the Actuator Test Reference Table of the EV-ECU .
  a. Item 3: Water pump actuate
  b. Item 4: Radiator fan 1 actuate
  c. Item 5: Radiator fan 2 actuate
  d. Item 9: Water pump actuate 2

Q: Is the check result normal?

YES : Go to Step 4.
NO : Go to the check procedures for the diagnostic trouble code for the actuator which has an abnormal drive .

STEP 4. Recheck for diagnostic trouble code
Check again if the DTC is stored in the DC-DC converter.
(1)Erase the DTC.
(2)Set the electric motor switch from the "LOCK" (OFF) position to the "ON", and then to the "START" position temporarily.
(3)Check if the DTC is stored.
Q: Is the DTC set?

<New>

<Old>

~~**STEP 4. Use scan tool MB991958 to confirm a DTC.**~~

~~**Q: Is the diagnostic trouble code stored?**~~

YES : Replace the on board charger/DC-DC converter.
NO : Intermittent malfunction (Refer to GROUP 00 – How to Use Troubleshooting/Inspection Service Points – How to Cope with Intermittent Malfunctions).

Code No. P1C11: DCDC ROM/RAM Fail

TROUBLE JUDGMENT

Check Condition

- The EV-ECU is activated.

Judgment Criterion

- The ROM is abnormal (checksum is abnormal).

or

- RAM writing/reading error is detected.

TSB Revision

Attached sheet 5 (8/34)

STEP 1. Recheck for diagnostic trouble code
Check again if the DTC is stored in the DC-DC converter.
(1)Erase the DTC.
(2)Set the electric motor switch from the "LOCK" (OFF) position to the "ON", and then to the "START" position temporarily.
(3)Check if the DTC is stored.
Q: Is the DTC set?

FAIL-SAFE AND BACKUP FUNCTION

- The output of DC-DC converter is stopped.

PROBABLE CAUSE

- The DC-DC converter is failed.

DIAGNOSIS

<New>

STEP 1. Use scan tool MB991958 to confirm a DTC.

Q: Is the diagnostic trouble code stored?

<Old>

YES : Replace the on board charger/DC-DC converter.
NO : Intermittent malfunction (Refer to GROUP 00 – How to Use Troubleshooting/Inspection Service Points – How to Cope with Intermittent Malfunctions).

Code No. P1C12: DCDC EEPROM Fail

TROUBLE JUDGMENT

Check Condition and Judgment Criterion

- The abnormality is detected when the EEPROM data are read.

FAIL-SAFE AND BACKUP FUNCTION

- The output of DC-DC converter continues at the initial value.

PROBABLE CAUSE

- The DC-DC converter is failed.

STEP 1. Recheck for diagnostic trouble code
Check again if the DTC is stored in the DC-DC converter.
(1)Erase the DTC.
(2)Set the electric motor switch from the "LOCK" (OFF) position to the "ON", and then to the "START" position temporarily.
(3)Check if the DTC is stored.
Q: Is the DTC set?

DIAGNOSIS

<New>

STEP 1. Use scan tool MB991958 to confirm a DTC.

Q: Is the diagnostic trouble code stored?

<Old>

YES : Replace the on board charger/DC-DC converter.
NO : Intermittent malfunction (Refer to GROUP 00 – How to Use Troubleshooting/Inspection Service Points – How to Cope with Intermittent Malfunctions).

Code No. P1C13: DCDC A/D Converter

TROUBLE JUDGMENT

Check Condition

- The EV-ECU allows the DC-DC converter to operate.

TSB Revision

Attached sheet 5 (9/34)

Judgment Criterion

- When it is detected that the AD conversion module is abnormal (if the conversion time is a time-out in the AD conversion module).

STEP 1. Recheck for diagnostic trouble code
Check again if the DTC is stored in the DC-DC converter.
(1)Erase the DTC.
(2)Set the electric motor switch from the "LOCK" (OFF) position to the "ON", and then to the "START" position temporarily.
(3)Check if the DTC is stored.
Q: Is the DTC set?

FAIL-SAFE AND BACKUP FUNCTION

- The output of DC-DC converter is stopped.

PROBABLE CAUSE

- The DC-DC converter is failed.

DIAGNOSIS

<New>

STEP 1. Use scan tool MB991958 to confirm a DTC.

Q: Is the diagnostic trouble code stored?

<Old>

YES : Replace the on board charger/DC-DC converter.
NO : Intermittent malfunction (Refer to GROUP 00 – How to Use Troubleshooting/Inspection Service Points – How to Cope with Intermittent Malfunctions).

Code No. P1C15: DCDC Output Current Sensor Fail

TROUBLE JUDGMENT

Check Conditions

- The EV-ECU is activated.

Judgment Criterion

- The output current sensor is abnormal value.

STEP 1. Recheck for diagnostic trouble code
Check again if the DTC is stored in the DC-DC converter.
(1)Erase the DTC.
(2)Set the electric motor switch from the "LOCK" (OFF) position to the "ON", and then to the "START" position temporarily.
(3)Check if the DTC is stored.
Q: Is the DTC set?

FAIL-SAFE AND BACKUP FUNCTION

- The output DC-DC converter is stopped.

PROBABLE CAUSE

- The DC-DC converter is failed.

DIAGNOSIS

<New>

STEP 1. Use scan tool MB991958 to confirm a DTC.

Q: Is the diagnostic trouble code stored?

<Old>

YES : Replace the on board charger/DC-DC converter.
NO : Intermittent malfunction (Refer to GROUP 00 – How to Use Troubleshooting/Inspection Service Points – How to Cope with Intermittent Malfunctions).

Code No. P1C16: Local CAN Communication Fail

Attached sheet 5 (10/34)

TROUBLE JUDGMENT

Check Conditions
- The EV-ECU is activated.

Judgment Criterion
- Local CAN communication is failed.

STEP 1. Recheck for diagnostic trouble code
Check again if the DTC is stored in the DC-DC converter.
(1)Erase the DTC.
(2)Set the electric motor switch from the "LOCK" (OFF) position to the "ON", and then to the "START" position temporarily.
(3)Check if the DTC is stored.
Q: Is the DTC set?

FAIL-SAFE AND BACKUP FUNCTION
- The output of DC-DC converter is restricted.

PROBABLE CAUSE
- The DC-DC converter is failed.

DIAGNOSIS

<New>

STEP 1. ~~Use scan tool MB991958 to confirm a DTC.~~

Q: ~~Is the diagnostic trouble code stored?~~

<Old>

YES : Replace the on board charger/DC-DC converter.
NO : Intermittent malfunction (Refer to GROUP 00 – How to Use Troubleshooting/Inspection Service Points – How to Cope with Intermittent Malfunctions).

Code No. P1C19: DCDC low Temperature

TROUBLE JUDGMENT

Check Condition
- The EV-ECU allows the DC-DC converter to operate.

Judgment Criterion
- The temperature difference between the rectifier and the internal DC-DC converter temperature sensor is less than -70° C (-158° F) or more than 70° C (158° F).

STEP 1. Recheck for diagnostic trouble code
Check again if the DTC is stored in the DC-DC converter.
(1)Erase the DTC.
(2)Set the electric motor switch from the "LOCK" (OFF) position to the "ON", and then to the "START" position temporarily.
(3)Check if the DTC is stored.
Q: Is the DTC set?

FAIL-SAFE AND BACKUP FUNCTION
- The output of DC-DC converter is stopped.

PROBABLE CAUSE
- The DC-DC converter is failed.

DIAGNOSIS

<New>

STEP 1. ~~Use scan tool MB991958 to confirm a DTC.~~

Q: ~~Is the diagnostic trouble code stored?~~

<Old>

YES : Replace the on board charger/DC-DC converter.
NO : Intermittent malfunction (Refer to GROUP 00 – How to Use Troubleshooting/Inspection Service Points – How to Cope with Intermittent Malfunctions).

TSB Revision

Attached sheet 5 (11/34)

Code No. P1C21: DCDC Input Voltage Abnormal (2)

TROUBLE JUDGMENT

Check Conditions

- The EV-ECU allows the DC-DC converter to operate.

Judgment Criterion

- The system detects a failure "overvoltage abnormal detection circuit" in the input section by predetermined times or more.

<New>

・The EV-ECU is failed.
・The high voltage system component except DC-DC converter is failed.
・The output of DC-DC converter is failed.

FAIL-SAFE AND BACKUP FUNCTION

- The output of DC-DC converter is stopped.

PROBABLE CAUSE

<Old>

- ~~The output of DC-DC converter is stopped.~~

DIAGNOSIS

<Old>

~~**STEP 1. Use scan tool MB991958 to confirm a DTC.**~~

~~**Q: Is the diagnostic trouble code stored?**~~

YES : Replace the on board charger/DC-DC converter.
NO : Intermittent malfunction (Refer to GROUP 00 – How to Use Troubleshooting/Inspection Service Points – How to Cope with Intermittent Malfunctions).

<New>

STEP 1. Use scan tool MB991958 to confirm a DTC of other systems.
Q:Is diagnostic trouble code of EV-ECU system stored?
YES : Check EV-ECU system.
NO : Go to Step 2.

STEP 2. Recheck for diagnostic trouble code
Check again if the DTC is stored in the DC-DC converter.
(1)Erase the DTC.
(2)Set the electric motor switch from the "LOCK" (OFF) position to the "ON", and then to the "START" position temporarily.
(3)Check if the DTC is stored.
Q: Is the DTC set?

TSB Revision

Attached sheet 5 (12/34)

Code No. P1C23: Battery Sensing Voltage Abnormal

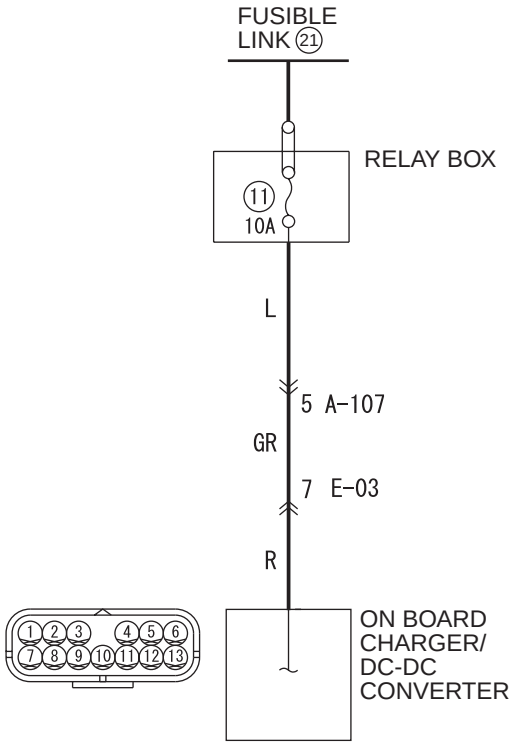

Wire colour code
B : Black LG : Light green G : Green L : Blue W : White Y : Yellow SB : Sky blue
BR : Brown O : Orange GR : Grey R : Red P : Pink V : Violet PU : Purple SI : Silver

AKC00220

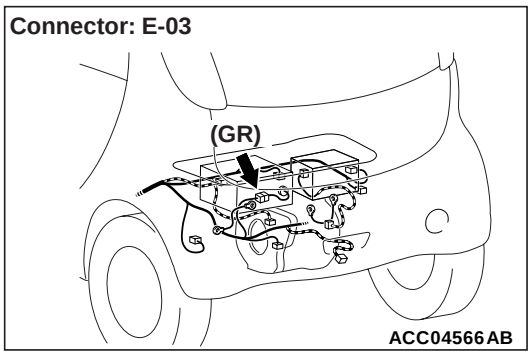

TROUBLE JUDGMENT

Check Conditions

- The EV-ECU allows the DC-DC converter to operate.

Judgment Criterion

- The difference between the output (B terminal) voltage and the output (S terminal) voltage is less than -3.0 V or more than 3.0 V.

FAIL-SAFE AND BACKUP FUNCTION

- The output of DC-DC converter is restricted.

PROBABLE CAUSES

<Old>

- ~~Damaged wiring harness or connector(s)~~
- The DC-DC converter is failed.

<New>

- ·Open circuits of output (S terminal) voltage, damage or poor contact of connector.
- ·Open circuits of output (B terminal) voltage.

TSB Revision

Attached sheet 5 (13/34)

DIAGNOSIS

STEP 1. Use scan tool MB991958 to confirm a DTC.

Q: Is diagnostic trouble code No. P1C04 stored?

YES : Check output (B terminal) voltage reduction (Refer to Code No. P1C04: DCDC output voltage reduction . Then go to Step 2.

NO : Go to Step 2.

<Deleted>

~~**STEP 2. Use scan tool MB991958 to confirm a DTC.**~~

~~**Q: Is the diagnostic trouble code stored?**~~

~~**YES :** Go to Step 3.~~

~~**NO :** Intermittent malfunction (Refer to GROUP 00 – How to Use Troubleshooting/Inspection Service Points – How to Cope with Intermittent Malfunctions).~~

<New> STEP 2. <Old>

~~**STEP 3.** **Connector check: E-03 on board charger/DC-DC converter connecter, fuse (No. 11) (relay box connecter)**

Q: Is the check result normal?

YES : Go to ~~Step 4.~~ <Old> Step 3 <New>

NO : Repair the damaged connector. Correct or replace the relay box.

<New> STEP 3. <Old>

~~**STEP 4.** **Check the wiring harness between E-03 on board charger/DC-DC converter connector terminal No. 7 and the fuse (No. 11) (relay box connecter terminal).**

Check the power supply line for open, short circuit and damage.

<Old>

Q: Is the check result normal?

YES : Go to ~~Step 5.~~ Step 4 <New>

NO : Repair the wiring harness.

STEP 4. Recheck for diagnostic trouble code
Check again if the DTC is stored in the DC-DC converter.
(1)Erase the DTC.
(2)Set the electric motor switch from the "LOCK" (OFF) position to the "ON", and then to the "START" position temporarily.
(3)Check if the DTC is stored.
Q: Is the DTC set?

<New>

~~**STEP 5. Use scan tool MB991958 to confirm a DTC.**~~

~~**Q: Is the diagnostic trouble code stored?**~~

<Old>

YES : Replace the on board charger/DC-DC converter.

NO : Intermittent malfunction (Refer to GROUP 00 – How to Use Troubleshooting/Inspection Service Points – How to Cope with Intermittent Malfunctions).

Code No. P1D00: AC Input Voltage (Low)
Code No. P1D01: AC Input Voltage (High)
Code No. P1D02: AC Input Voltage (Over)

TROUBLE JUDGMENT

Check Conditions

- While the on board charger is allowed to be charged from the EV-ECU.

Attached sheet 5 (14/34)

Judgment Criterion

- The effective value of AC input voltage is more than 40 V and less than 80 V. <P1D00>

or

- The effective value of AC input voltage is more than 270 V. <P1D01>

or

- The effective value of AC input voltage is more than 300 V for a moment. <P1D02>

FAIL-SAFE AND BACKUP FUNCTION <New>

- The charge is stopped.

<Old> failed.

PROBABLE CAUSES

- The AC power supply (at the supply side) is ~~abnormal~~.
- The charging cable is failed.
- The on board charger is failed.

DIAGNOSIS

<New>

STEP 1. Recheck for diagnostic trouble code
Check again if the DTC is stored in the on board charger.
(1)Erase the DTC.
(2)Perform the regular charge..
(3)Check if the DTC is stored.
Q: Is the DTC set?

<Old>

~~**STEP 1. Use scan tool MB991958 to confirm a DTC.**~~

~~**Q: Is the diagnostic trouble code stored?**~~

YES : Go to Step 2.
NO : Check the AC power supply usage conditions used by the users.

<New>

STEP 2. Check charging cable
・Check the trouble symptom for charging cable.

<Old>

~~**STEP 2. Check charging cable itself**~~

- ~~Check charging cable.~~

Q: Is the check result normal?

YES : Go to Step 3.
NO : Replace the charging cable.

<New> <Old>

STEP 3. Recheck for diagnostic trouble code
Check again if the DTC is stored in the on board charger.
(1)Erase the DTC.
(2)Perform the regular charge..
(3)Check if the DTC is stored.
Q: Is the DTC set?

~~**STEP 3. Use scan tool MB991958 to confirm a DTC.**~~

~~**Q: Is the diagnostic trouble code stored?**~~

YES : Replace the on board charger/DC-DC converter.
NO : Intermittent malfunction (Refer to GROUP 00 – How to Use Troubleshooting/Inspection Service Points – How to Cope with Intermittent Malfunctions).

Code No. P1D03: AC Input Current (High)

TROUBLE JUDGMENT

Check Conditions

- While the on board charger is allowed to be charged from the EV-ECU.
- While the AC power supply is being input.

Judgment Criterion

- The effective current of AC input current is more than input current maximum value.

Attached sheet 5 (15/34)

<New>
・The AC power supply (at the supply side) is failed.
・The charging cable is failed.

FAIL-SAFE AND BACKUP FUNCTION
- The charge is stopped.

PROBABLE CAUSE <Old>
- ~~The AC power supply (at the supply side) is abnormal.~~
- The on board charger is failed.

<New>
STEP 1. Check charging cable
・Check the trouble symptom for charging cable.
Q: Is the check result normal?
YES: Go to Step 2.
NO: Replace the charging cable.

STEP 2. Recheck for diagnostic trouble code
Check again if the DTC is stored in the on board charger.
(1)Erase the DTC.
(2)Perform the regular charge..
(3)Check if the DTC is stored.
Q: Is the DTC set?

DIAGNOSIS

<Old>
~~**STEP 1. Use scan tool MB991958 to confirm a DTC.**~~

~~**Q: Is the diagnostic trouble code stored?**~~

YES : Replace the on board charger/DC-DC converter.
NO : Check the AC power supply usage conditions used by the users. If there are no problems, the fault is determined as an intermittent Malfunction (Refer to GROUP 00 – How to Use Troubleshooting/Inspection Service Points – How to Cope with Intermittent Malfunctions).

Code No. P1D06: Output Voltage (High)

TROUBLE JUDGMENT

Check Conditions
- While the on board charger is allowed to be charged from the EV-ECU.

Judgment Criterion
- The output (terminal) voltage is more than 400 V.

FAIL-SAFE AND BACKUP FUNCTION
- The charge is stopped.

PROBABLE CAUSES
- The EV-ECU is failed.
- The on board charger is failed.

DIAGNOSIS

STEP 1. Use scan tool MB991958 to confirm a DTC.

Q: Is diagnostic trouble code No. P1D14 stored?

YES : Check request voltage malfunction (Refer to Code No. P1D14: Voltage command abnormal).
NO : Go to Step 2.

STEP 2. Use scan tool MB991958 to confirm a DTC of other systems.

Q: Is diagnostic trouble code of EV-ECU system stored?

YES : Check EV-ECU system.
NO : Go to Step 3.

TSB Revision

Attached sheet 5 (16/34)

<New>

STEP 3. Recheck for diagnostic trouble code
Check again if the DTC is stored in the on board charger.
(1)Erase the DTC.
(2)Perform the regular charge..
(3)Check if the DTC is stored.
Q: Is the DTC set?

<Old>

~~STEP 3. Use scan tool MB991958 to confirm a DTC.~~
~~Q: Is the diagnostic trouble code stored?~~

YES : Replace the on board charger/DC-DC converter.
NO : Intermittent malfunction (Refer to GROUP 00 – How to Use Troubleshooting/Inspection Service Points – How to Cope with Intermittent Malfunctions).

Code No. P1D07: Output Voltage (Over)

TROUBLE JUDGMENT

Check Conditions

- While the on board charger is allowed to be charged from the EV-ECU.

Judgment Criterion

- The system detects overvoltage detection signal by predetermined times or more at the rectification area.

<Added>

・The main drive lithium-ion battery assembly is failed.
・The EV-ECU is failed.

FAIL-SAFE AND BACKUP FUNCTION

- The charge is stopped.

PROBABLE CAUSE

- The on board charger is failed.

DIAGNOSIS

<Old>

~~STEP 1. Use scan tool MB991958 to confirm a DTC.~~
~~Q: Is the diagnostic trouble code stored?~~

YES : Replace the on board charger/DC-DC converter.
NO : Intermittent malfunction (Refer to GROUP 00 – How to Use Troubleshooting/Inspection Service Points – How to Cope with Intermittent Malfunctions).

<New>

STEP 1. Use scan tool MB991958 to confirm a DTC of other systems.
Q:Is diagnostic trouble code of EV-ECU system stored?
YES : Check EV-ECU system.
NO : Go to Step 2.

STEP 2. Recheck for diagnostic trouble code
Check again if the DTC is stored in the on board charger.
(1)Erase the DTC.
(2)Perform the regular charge..
(3)Check if the DTC is stored.
Q: Is the DTC set?

TSB Revision

Attached sheet 5 (17/34)

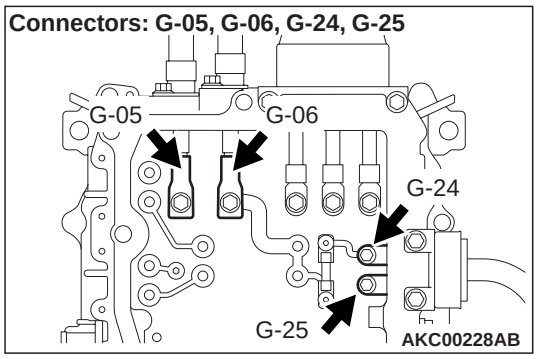

TROUBLE JUDGMENT

Check Conditions

- While the on board charger is allowed to be charged from the EV-ECU.

Judgment Criterion

- The output (terminal) voltage is less than 180 V.

<Added>

FAIL-SAFE AND BACKUP FUNCTION

- The charge is stopped.

・The main drive lithium-ion battery assembly is failed.

PROBABLE CAUSES

- Fuse meltdown between on board charger and inverter
- Open circuits or damage of high voltage circuits between on board charger and Main Drive Lithium-ion Battery; or poor contact of connector
- The on board charger is failed.

DIAGNOSIS

⚠ *DANGER*

When high voltage system components are served, be sure to pull service plugs to shut down high voltage.

⚠ *DANGER*

When pulling service plugs, wear the specified protective equipment.

STEP 1. Use scan tool MB991958 to confirm a DTC of other systems.

Q: Is the diagnostic trouble code of EV-ECU system stored?

YES : Check EV-ECU system.
NO : Go to Step 2.

Attached sheet 5 (18/34)

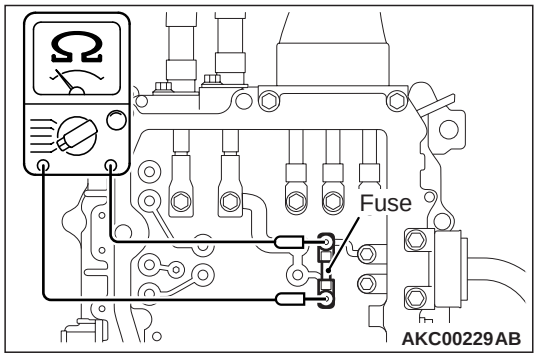

STEP 2. Continuity check on fuse between on board charger and inverter

⚠ ***DANGER***

When high voltage system components are served, be sure to pull service plugs to shut down high voltage before serving.

⚠ ***DANGER***

When pulling service plugs, wear the specified protective equipment.

- Check continuity of fuse both ends.

  OK: Continuity

Q: Is the check result normal?

YES : Go to Step 3.
NO : Replace the fuse.

<Old>

<New>

STEP 3. Connector check: G-24 inverter (+ terminal), G-25 inverter (- terminal), G-06 inverter (+ terminal), G-05 inverter (- terminal) connector

<New>

STEP 4. Check harness between G-24 inverter (+ terminal) connector, G-25 inverter (- terminal) and inverter and on board charger/DC-DC converter connector
・Check power supply line for open circuit and damage.
Q: Is the check result normal?
YES: Go to Step 5.
NO: Repair or replace the inverter and on board charger/DC-DC converter.

<New>

STEP 5. Check harness between G-06 inverter (+ terminal) connector, G-05 inverter (- terminal) and G-19 main drive lithium-ion battery (+ terminal) connector, G-18 main drive lithium-ion battery (- terminal) connector
・Check power supply line for open circuit and damage.
Q: Is the check result normal?
YES: Go to Step 5.
NO: Repair or replace the main drive lithium-ion battery cable.

<Old>

~~**STEP 3. Connector check: G-24 inverter and on board charger/DC-DC converter combination (+ terminal) connector, G-25 inverter and on board charger/DC-DC converter combination (– terminal) connector, G-05 inverter (– terminal) connector, G-06 inverter (+ terminal) connector**~~

Q: Is the check result normal?

YES : Go to Step 4.
NO : Repair.

<Old>

~~**STEP 4. Check harness between G-24 (terminal No. 1) inverter and on board charger/DC-DC converter combination (+ terminal) connector and G-06 (terminal No. 1) inverter (+ terminal) connector**~~

- Check power supply line for open circuit and damage.

Q: Is the check result normal?

YES : Go to Step 5.
NO : Repair.

~~**STEP 5. Check harness between G-25 (terminal No. 1) inverter and on board charger/DC-DC converter combination (– terminal) connector and G-05 (terminal No. 1) inverter (– terminal) connector**~~

- Check power supply line for open circuit and damage.

Q: Is the check result normal?

YES : Go to Step 6.
NO : Repair.

<New>

STEP 6. Recheck for diagnostic trouble code
Check again if the DTC is stored in the on board charger.
(1)Erase the DTC.
(2)Perform the regular charge..
(3)Check if the DTC is stored.
Q: Is the DTC set?

<Old>

~~**STEP 6. Use scan tool MB991958 to confirm a DTC.**~~

~~**Q: Is the diagnostic trouble code stored?**~~

YES : Replace the on board charger/DC-DC converter.
NO : Intermittent malfunction (Refer to GROUP 00 – How to Use Troubleshooting/Inspection Service Points – How to Cope with Intermittent Malfunctions).

TSB Revision

Attached sheet 5 (19/34)

Code No. P1D09: Output Current (High)
Code No. P1D10: Output Current (Control Fail)

TROUBLE JUDGMENT

Check Conditions

- While the on board charger is allowed to be charged from the EV-ECU.
- While the AC power supply is being input.

Judgment Criterion

- When the input voltage is AC 100 V, the output current is more than 7.0 A. <P1D09>

or

- When the input voltage is AC 200 V, the output current is more than 10.0 A. <P1D09>

or

- The difference between the target output current and the ~~actual~~ output current is more than 1.0 A or less than -1.0 A. <P1D10>

<Deleted>

FAIL-SAFE AND BACKUP FUNCTION

- The charge is stopped.

PROBABLE CAUSES

- The EV-ECU is failed.
- The on board charger is failed.

DIAGNOSIS

STEP 1. Use scan tool MB991958 to confirm a DTC.

Q: Is diagnostic trouble code No. P1D15 stored?

YES : Check current command abnormal (Refer to Code No. P1D15: Current command abnormal).
NO : Go to Step 2.

STEP 2. Use scan tool MB991958 to confirm a DTC of other systems.

Q: Is diagnostic trouble code of EV-ECU system stored?

YES : Check EV-ECU system.
NO : Go to Step 3.

<New>

STEP 3. Recheck for diagnostic trouble code
Check again if the DTC is stored in the on board charger.
(1)Erase the DTC.
(2) Perform the regular charge..
(3)Check if the DTC is stored.
Q: Is the DTC set?

<Old>

~~**STEP 3. Use scan tool MB991958 to confirm a DTC.**~~

~~**Q: Is the diagnostic trouble code stored?**~~

YES : Replace the on board charger/DC-DC converter.
NO : Intermittent malfunction (Refer to GROUP 00 – How to Use Troubleshooting/Inspection Service Points – How to Cope with Intermittent Malfunctions).

Attached sheet 5 (20/34)

Code No. P1D11: Output Current (Over)

TROUBLE JUDGMENT

Check Conditions

- While the on board charger is allowed to be charged from the EV-ECU.

Judgment Criterion

- The system detects overcurrent detection signal in the output section by predetermined times or more.

FAIL-SAFE AND BACKUP FUNCTION

- The charge is stopped.

PROBABLE CAUSE

- The on board charger is failed.

DIAGNOSIS

<New>

STEP 1. Recheck for diagnostic trouble code
Check again if the DTC is stored in the on board charger.
(1)Erase the DTC.
(2)Perform the regular charge..
(3)Check if the DTC is stored.
Q: Is the DTC set?

<Old>

~~**STEP 1. Use scan tool MB991958 to confirm a DTC.**~~

~~**Q: Is the diagnostic trouble code stored?**~~

YES : Replace the on board charger/DC-DC converter.

NO : Intermittent malfunction (Refer to GROUP 00 – How to Use Troubleshooting/Inspection Service Points – How to Cope with Intermittent Malfunctions).

TSB Revision

Attached sheet 5 (21/34)

STEP 4. Connector check: A-06X on boar charger relay (relay box) connecter

Q: Is the check result normal?

YES : Go to Step 5.
NO : Correct or replace the relay box.

STEP 5. Check the wiring harness between A-06X on boar charger relay (relay box) connector terminal No. 4 and the relay box fuse (No. 11).

Check the power supply line for open, short circuit and damage.

Q: Is the check result normal?

YES : Go to Step 6.
NO : Repair the wiring harness.

STEP 6. Check A-06X on board charger relay itself.

- Check on board charger relay itself.

Q: Is the check result normal?

YES : Go to Step 7.
NO : Replace the on board charger relay.

STEP 7. Connector check: E-03 on board charger/DC-DC converter, A-06X on board charger relay (relay box) connecter

Q: Is the check result normal?

YES : Go to Step 8.
NO : Repair the damaged connector. Or, correct or replace the relay box.

STEP 8. Check harness between A-06X (terminal No. 1) on board charger relay connector and E-03 (terminal No. 2) on board charger/DC-DC converter connector

NOTE: Before checking harness, check intermediate connector A-107, and repair if necessary.

- Check output line for damage.

Q: Is the check result normal?

YES : Go to Step 9.
NO : Repair.

<New>

STEP 9. Recheck for diagnostic trouble code
Check again if the DTC is stored in the on board charger.
(1)Erase the DTC.
(2)Perform the regular charge..
(3)Check if the DTC is stored.
Q: Is the DTC set?

<Old>

~~**STEP 9. Use scan tool MB991958 to confirm a DTC.**~~

~~**Q: Is the diagnostic trouble code stored?**~~

YES : Replace the on board charger/DC-DC converter.
NO : Intermittent malfunction (Refer to GROUP 00 – How to Use Troubleshooting/Inspection Service Points – How to Cope with Intermittent Malfunctions).

Code No. P1D14: Voltage Command Abnormal

TSB Revision

Attached sheet 5 (22/34)

TROUBLE JUDGMENT

Check Conditions

- While the on board charger is allowed to be charged from the EV-ECU.
- While the AC power supply is being input.

Judgment Criterion

- The charging voltage command from the EV-ECU exceeds 370 V (upper limit).

or

- The charging voltage command from the EV-ECU is less than 0 V.

FAIL-SAFE AND BACKUP FUNCTION

- The charge is stopped.

PROBABLE CAUSES

- The EV-ECU is failed.
- The on board charger is failed.

DIAGNOSIS

STEP 1. Use scan tool MB991958 to confirm a DTC of other systems.

Q: Is diagnostic trouble code of EV-ECU system stored?

YES : Check EV-ECU system.
NO : Go to Step 2.

<New>

STEP 2. Recheck for diagnostic trouble code
Check again if the DTC is stored in the on board charger.
(1)Erase the DTC.
(2)Perform the regular charge..
(3)Check if the DTC is stored.
Q: Is the DTC set?

<Old>

~~**STEP 2. Use scan tool MB991958 to confirm a DTC.**~~

~~**Q: Is the diagnostic trouble code stored?**~~

YES : Replace the on board charger/DC-DC converter.
NO : Intermittent malfunction (Refer to GROUP 00 – How to Use Troubleshooting/Inspection Service Points – How to Cope with Intermittent Malfunctions).

Code No. P1D15: Current Command Abnormal

TROUBLE JUDGMENT

Check Conditions

- While the on board charger is allowed to be charged from the EV-ECU.

Judgment Criterion

- The charging current command from the EV-ECU is more than 5.5 A (upper limit of judgment that 100 V is received).

or

- The charging current command from the EV-ECU is more than 10 A (upper limit of judgment that 200 V is received).

TSB Revision

Attached sheet 5 (23/34)

FAIL-SAFE AND BACKUP FUNCTION
- The charge is stopped.

PROBABLE CAUSES
- The EV-ECU is failed.
- The on board charger is failed.

DIAGNOSIS

STEP 1. Use scan tool MB991958 to confirm a DTC of other systems.

Q: Is diagnostic trouble code of EV-ECU system stored?

YES : Check EV-ECU system.
NO : Go to Step 2.

<New>

STEP 2. Recheck for diagnostic trouble code
Check again if the DTC is stored in the on board charger.
(1)Erase the DTC.
(2) Perform the regular charge..
(3)Check if the DTC is stored.
Q: Is the DTC set?

<Old>

~~**STEP 2. Use scan tool MB991958 to confirm a DTC.**~~

~~**Q: Is the diagnostic trouble code stored?**~~

YES : Replace the on board charger/DC-DC converter.
NO : Intermittent malfunction (Refer to GROUP 00 – How to Use Troubleshooting/Inspection Service Points – How to Cope with Intermittent Malfunctions).

TSB Revision

Attached sheet 5 (24/34)

or
- The pilot frequency is from 970 Hz to 1,030Hz and the pilot signal duty ratio is from 7 % to 8 %. <P1D16>

or
- The pilot frequency is from 970 Hz to 1,030Hz and the pilot signal duty ratio is more than 97 %. <P1D16>

or
- The pilot frequency is from 970 Hz to 1,030Hz and the pilot signal duty ratio is from 3 % to 7 %. <P1D17>

or
- The pilot frequency is less than 970 Hz. <P1D18>

or
- The pilot frequency is more than 1,030 Hz. <P1D18>

or
- When the system is in charging standby, the pilot signal voltage is 9 V. <P1D43>

or
- ~~When charging is permitted, the pilot signal voltage is 6 V. <P1D43>~~

<New>

・When the system is in charging standby, the pilot signal voltage is except 9 V,
or when the system is in charging, the pilot signal voltage is except 6 V . <P1D43>

<Old>

FAIL-SAFE AND BACKUP FUNCTION
- The charge is stopped.

PROBABLE CAUSES
- The charging cable is failed.
- Open circuits of pilot signal circuit, short circuits to ground, short circuits to power supply system and damage; poor contacts of connector
- The on board charger is failed.
- The ground of power supply facility is failed.

DIAGNOSIS

STEP 1. Check the control box status of the charging cable.
- During the regular charging.

Q: Is the FAULT indicator lit or blinked?

YES : Refer to Inspection Procedure: FAULT indicator is lit , FAULT indicator blinks.

NO : Go to Step 2.

STEP 2. Check pilot signal terminal itself.
- Check charging cable.

Q: Is the check result normal?

YES : Go to Step 3.

NO : Replace the charging cable.

TSB Revision

Attached sheet 5 (25/34)

STEP 3. Connector check: G-03 regular charging connector and E-03 on board charger/DC-DC converter connector.

Q: Are the check results normal?

YES : Go to Step 4.
NO : Repair or replace the connector.

STEP 4. Check harness between G-03 regular charging connector terminal No. 3 and E-03 on board charger/DC-DC converter connector terminal No. 9.

NOTE: Before checking harness, check intermediate connector G-12, and repair if necessary.

- Check the signal line for open circuits, short circuits to ground and damage.

Q: Is the check result normal?

YES : Go to Step 5.
NO : Repair the damaged harness wire.

<New>

STEP 5. Recheck for diagnostic trouble code
Check again if the DTC is stored in the on board charger.
(1)Erase the DTC.
(2)Perform the regular charge..
(3)Check if the DTC is stored.
Q: Is the DTC set?

<Old>

~~**STEP 5. Use scan tool MB991958 to confirm a DTC.**~~

- ~~Reconfirmation of diagnostic trouble code.~~

~~**Q: Is diagnostic trouble code stored?**~~

YES : Go to Step 6.
NO : Intermittent malfunction (Refer to GROUP 00 – How to Use Troubleshooting/Inspection Service Points – How to Cope with Intermittent Malfunctions).

STEP 6. Check ground of power supply facility

Q: Is the check result normal?

YES : Go to Step 7.
NO : Repair the power supply facility.

<Old>

~~**STEP 7. Use scan tool MB991958 to confirm a DTC.**~~

- ~~Reconfirmation of diagnostic trouble code.~~

~~**Q: Is diagnostic trouble code stored?**~~

YES : Replace the on board charger/DC-DC converter.
NO : Intermittent malfunction (Refer to GROUP 00 – How to Use Troubleshooting/Inspection Service Points – How to Cope with Intermittent Malfunctions).

<New>

STEP 7. Recheck for diagnostic trouble code
Check again if the DTC is stored in the on board charger.
(1)Erase the DTC.
(2)Perform the regular charge..
(3)Check if the DTC is stored.
Q: Is the DTC set?

Code No. P1D23: Power Circuit (Pre-charge fail)

TROUBLE JUDGMENT

Check Conditions

- While the on board charger is allowed to be charged from the EV-ECU.
- While the AC power supply is being input.

Attached sheet 5 (26/34)

Judgment Criterion
- The power factor improvement circuit voltage is more than overcurrent detection signal by predetermined times.

FAIL-SAFE AND BACKUP FUNCTION
- The charge is stopped.

PROBABLE CAUSE
- The on board charger is failed.

DIAGNOSIS

<Old>

~~**STEP 1. Use scan tool MB991958 to confirm a DTC.**~~

~~**Q: Is the diagnostic trouble code stored?**~~

YES : Replace the on board charger/DC-DC converter.
NO : Intermittent malfunction (Refer to GROUP 00 – How to Use Troubleshooting/Inspection Service Points – How to Cope with Intermittent Malfunctions).

<New>

STEP 1. Recheck for diagnostic trouble code
Check again if the DTC is stored in the on board charger.
(1)Erase the DTC.
(2) Perform the regular charge..
(3)Check if the DTC is stored.
Q: Is the DTC set?

Code No. P1D25: Inverter Output Current

TROUBLE JUDGMENT

Check Conditions
- While the on board charger is allowed to be charged from the EV-ECU.

Judgment Criterion
- The system detects overcurrent detection signal by predetermined times or more at the section where voltage rises.

<Added>

・The AC power supply (at the supply side) is failed.

FAIL-SAFE AND BACKUP FUNCTION
- The charge is stopped.

PROBABLE CAUSE
- The on board charger is failed.

DIAGNOSIS

<Old>

~~**STEP 1. Use scan tool MB991958 to confirm a DTC.**~~

~~**Q: Is the diagnostic trouble code stored?**~~

YES : Replace the on board charger/DC-DC converter.
NO : Intermittent malfunction (Refer to GROUP 00 – How to Use Troubleshooting/Inspection Service Points – How to Cope with Intermittent Malfunctions).

<New>

STEP 1. Recheck for diagnostic trouble code
Check again if the DTC is stored in the on board charger.
(1)Erase the DTC.
(2) Perform the regular charge..
(3)Check if the DTC is stored.
Q: Is the DTC set?

TSB Revision

Attached sheet 5 (27/34)

Code No. P1D26: Internal Temperature
Code No. P1D27: PFC Temperature
Code No. P1D40: Rectifier Coil Temperature
Code No. P1D41: Input Diode Temperature

TROUBLE JUDGMENT

Check Conditions

- While the on board charger is allowed to be charged from the EV-ECU.

Judgment Criterion

- The inside ambient temperature sensor is more than 110° C (230° F). <P1D26>
- The power factor improvement circuit temperature sensor is more than 110° C (230° F). <P1D27>
- The coil of rectification area temperature sensor is more than 110° C (230° F). <P1D40>
- The input diode area temperature sensor is more than 110° C (230° F). <P1D41>

<Added>
· The EV-ECU is failed.

FAIL-SAFE AND BACKUP FUNCTION

- The charge is stopped.

PROBABLE CAUSES

- There is not enough coolant.
- The water pump is failed.
- The radiator fan is failed.
- The temperature sensor installed in the on board charger is failed.

DIAGNOSIS

STEP 1. Use scan tool MB991958 to confirm a DTC of other systems.

Q: Is diagnostic trouble code of EV-ECU system stored?

YES : Check EV-ECU system.
NO : Go to Step 2.

STEP 2. Check the coolant.

NOTE: If the coolant largely decreases, check whether the coolant leakage exists or not. Repair it if necessary.

- Check on coolant (Refer to GROUP 14 – On-vehicle Service – Coolant Check).

Q: Is the check result normal?

YES : Go to Step 3.
NO : Replace or supply the coolant.

Attached sheet 5 (28/34)

STEP 3. Scan tool MB991958 actuator test

- Refer to the Actuator Test Reference Table of the EV-ECU,

.

a. Item 3: Water pump actuate
b. Item 4: Radiator fan 1 actuate
c. Item 5: Radiator fan 2 actuate
d. Item 9: Water pump actuate 2

Q: Is the check result normal?

YES : Go to Step 4.
NO : Go to the check procedures for the diagnostic trouble code for the actuator which has an abnormal drive

.

<New>

STEP 4. Recheck for diagnostic trouble code
Check again if the DTC is stored in the on board charger.
(1)Erase the DTC.
(2)Perform the regular charge..
(3)Check if the DTC is stored.
Q: Is the DTC set?

<Old>

~~**STEP 4. Use scan tool MB991958 to confirm a DTC.**~~

~~**Q: Is the diagnostic trouble code stored?**~~

YES : Replace the on board charger/DC-DC converter.
NO : Intermittent malfunction (Refer to GROUP 00 – How to Use Troubleshooting/Inspection Service Points – How to Cope with Intermittent Malfunctions).

Code No. P1D31: ROM/RAM Fail

TROUBLE JUDGMENT

Check Condition

- While the on board charger is allowed to be charged from the EV-ECU.

Judgment Criterion

- The ROM is abnormal (checksum is abnormal).

or

- RAM writing/reading error is detected.

FAIL-SAFE AND BACKUP FUNCTION

- The charge is stopped.

PROBABLE CAUSE

- The on board charger is failed.

DIAGNOSIS

<New>

STEP 1. Recheck for diagnostic trouble code
Check again if the DTC is stored in the on board charger.
(1)Erase the DTC.
(2)Perform the regular charge..
(3)Check if the DTC is stored.
Q: Is the DTC set?

<Old>

~~**STEP 1. Use scan tool MB991958 to confirm a DTC.**~~

~~**Q: Is the diagnostic trouble code stored?**~~

YES : Replace the on board charger/DC-DC converter.
NO : Intermittent malfunction (Refer to GROUP 00 – How to Use Troubleshooting/Inspection Service Points – How to Cope with Intermittent Malfunctions).

Attached sheet 5 (29/34)

Code No. P1D32: EEPROM Fail

TROUBLE JUDGMENT

Check Condition and Judgment Criterion

- The abnormality is detected when the EEPROM data are read.

FAIL-SAFE AND BACKUP FUNCTION

- The charge continues at the initial value.

PROBABLE CAUSE

- The on board charger is failed.

DIAGNOSIS

<New>

STEP 1. Recheck for diagnostic trouble code
Check again if the DTC is stored in the on board charger.
(1)Erase the DTC.
(2)Perform the regular charge..
(3)Check if the DTC is stored.
Q: Is the DTC set?

<Old>

~~STEP 1. Use scan tool MB991958 to confirm a DTC.~~

~~Q: Is the diagnostic trouble code stored?~~

YES : Replace the on board charger/DC-DC converter.
NO : Intermittent malfunction (Refer to GROUP 00 – How to Use Troubleshooting/Inspection Service Points – How to Cope with Intermittent Malfunctions).

Code No. P1D33: AD Converter Abnormal

TROUBLE JUDGMENT

Check Condition

- While the on board charger is allowed to be charged from the EV-ECU.

Judgment Criterion

- When it is detected that the AD conversion module is abnormal (if the conversion time is a time-out in the AD conversion module).

FAIL-SAFE AND BACKUP FUNCTION

- The charge is stopped.

PROBABLE CAUSE

- The on board charger is failed.

DIAGNOSIS

<New>

STEP 1. Recheck for diagnostic trouble code
Check again if the DTC is stored in the on board charger.
(1)Erase the DTC.
(2)Perform the regular charge..
(3)Check if the DTC is stored.
Q: Is the DTC set?

<Old>

~~STEP 1. Use scan tool MB991958 to confirm a DTC.~~

~~Q: Is the diagnostic trouble code stored?~~

YES : Replace the on board charger/DC-DC converter.
NO : Intermittent malfunction (Refer to GROUP 00 – How to Use Troubleshooting/Inspection Service Points – How to Cope with Intermittent Malfunctions).

TSB Revision

Attached sheet 5 (30/34)

Code No. P1D34: Input Current Sensor Fail
Code No. P1D35: Output Current Sensor Fail

TROUBLE JUDGMENT

Check Conditions
- When the charging cable is connected.

Judgment Criterion
- Input current is abnormal value. <P1D34>
- The output current is abnormal value. <P1D35>

FAIL-SAFE AND BACKUP FUNCTION
- The charge is stopped.

PROBABLE CAUSE
- The on board charger is failed.

DIAGNOSIS

<New>
STEP 1. Recheck for diagnostic trouble code
Check again if the DTC is stored in the on board charger.
(1)Erase the DTC.
(2)Perform the regular charge..
(3)Check if the DTC is stored.
Q: Is the DTC set?

<Old>
~~STEP 1. Use scan tool MB991958 to confirm a DTC.~~
~~Q: Is the diagnostic trouble code stored?~~

YES : Replace the on board charger/DC-DC converter.
NO : Intermittent malfunction (Refer to GROUP 00 – How to Use Troubleshooting/Inspection Service Points – How to Cope with Intermittent Malfunctions).

Code No. P1D37: AC Power Supply/ AC Input Fuse 1
Code No. P1D44: Power Supply Equipment Abnormal

TROUBLE JUDGMENT

Check Conditions
- While the on board charger is allowed to be charged from the EV-ECU.

Judgment Criterion
- The pilot signal duty ratio is from 8 % to 97 %. <P1D37>

and
- The AC input voltage is less than 80 V. <P1D37>

or
- The AC input voltage is less than -20 A or more than 20 A. <P1D44>

FAIL-SAFE AND BACKUP FUNCTION
- The charge is stopped.

<New>
failed.
<Old>
~~abnormal.~~

PROBABLE CAUSES
- The AC power supply (at the supply side) is
- The charging cable is failed.
- The on board charger is failed.

TSB Revision

Attached sheet 5 (31/34)

<New>

STEP 1. Recheck for diagnostic trouble code
Check again if the DTC is stored in the on board charger.
(1)Erase the DTC.
(2)Perform the regular charge..
(3)Check if the DTC is stored.
Q: Is the DTC set?

DIAGNOSIS

<Old>

~~STEP 1. Use scan tool MB991958 to confirm a DTC.~~
~~Q: Is the diagnostic trouble code stored?~~

YES : Go to Step 2.
NO : Check the AC power supply usage conditions used by the users.

<Old>

<New>

STEP 2. Check charging cable
・Check the trouble symptom for charging cable.

~~STEP 2. Check charging cable itself~~
- ~~Check charging cable.~~

Q: Is the check result normal?

YES : Go to Step 3.
NO : Replace the charging cable.

<New>

<Old>

STEP 3. Recheck for diagnostic trouble code
Check again if the DTC is stored in the on board charger.
(1)Erase the DTC.
(2)Perform the regular charge..
(3)Check if the DTC is stored.
Q: Is the DTC set?

~~STEP 3. Use scan tool MB991958 to confirm a DTC.~~
~~Q: Is the diagnostic trouble code stored?~~

YES : Replace the on board charger/DC-DC converter.
NO : Intermittent malfunction (Refer to GROUP 00 – How to Use Troubleshooting/Inspection Service Points – How to Cope with Intermittent Malfunctions).

Code No. P1D42: Temperature Sensor

TROUBLE JUDGMENT

Check Condition
- While the on board charger is allowed to be charged from the EV-ECU.

Judgment Criterion
- The difference between the maximum value and mean value which the temperature sensors detect is less than -50° C (122° F) or more than 50° C (122° F).

FAIL-SAFE AND BACKUP FUNCTION
- The charge is stopped.

PROBABLE CAUSE
- The on board charger is failed.

DIAGNOSIS

<New>

<Old>

STEP 1. Recheck for diagnostic trouble code
Check again if the DTC is stored in the on board charger.
(1)Erase the DTC.
(2)Perform the regular charge..
(3)Check if the DTC is stored.
Q: Is the DTC set?

~~STEP 1. Use scan tool MB991958 to confirm a DTC.~~
~~Q: Is the diagnostic trouble code stored?~~

YES : Replace the on board charger/DC-DC converter.
NO : Intermittent malfunction (Refer to GROUP 00 – How to Use Troubleshooting/Inspection Service Points – How to Cope with Intermittent Malfunctions).

TSB Revision

Attached sheet 5 (32/34)

Code No. P1D45: Failure Detection Circuit

TROUBLE JUDGMENT

Check Conditions

- When the charging cable is connected.

Judgment Criterion

- The system detects overcurrent detection signal by predetermined times or more at the section where voltage rises.

or

- The system detects overvoltage detection signal by predetermined times or more at the rectification area.

or

- The system detects overcurrent detection signal by predetermined times or more at the rectification area.

FAIL-SAFE AND BACKUP FUNCTION

- The charge is stopped.

PROBABLE CAUSE

- The on board charger is failed.

DIAGNOSIS

<New>

STEP 1. Recheck for diagnostic trouble code
Check again if the DTC is stored in the on board charger.
(1)Erase the DTC.
(2)Perform the regular charge..
(3)Check if the DTC is stored.
Q: Is the DTC set?

<Old>

~~**STEP 1. Use scan tool MB991958 to confirm a DTC.**~~

~~**Q: Is the diagnostic trouble code stored?**~~

YES : Replace the on board charger/DC-DC converter.
NO : Intermittent malfunction (Refer to GROUP 00 – How to Use Troubleshooting/Inspection Service Points – How to Cope with Intermittent Malfunctions).

Code No. U1100: EV ECU CAN Timeout (1)

TROUBLE JUDGMENT

Check Condition

- While the on board charger is allowed to be charged from the EV-ECU. <On board charger>

or

- EV-ECU is being activated <DC-DC converter>

Judgment Criterion

- The CAN communication data cannot be received from the EV-ECU.

<New>

・The charge is stopped. <on board charger>
or
・The output is restricted. <DC-DC converter>

FAIL-SAFE AND BACKUP FUNCTION

<Old>

- ~~The charge is stopped.~~

or

- ~~The output of DC-DC converter is restricted.~~

TSB Revision

Attached sheet 5 (33/34)

PROBABLE CAUSES

- The CAN bus is failed.
- The EV-ECU is failed.
- The on board charger is failed.

or

- The DC-DC converter is failed.

DIAGNOSIS

STEP 1. Scan tool MB991958 CAN bus diagnosis

- Using Scan tool MB991958, perform CAN bus line diagnosis.

Q: Is the check result normal?

YES : Go to Step 2.
NO : Repair CAN bus line (Refer to GROUP 54C – Troubleshooting – CAN Bus Diagnostics Table).

STEP 2. Use scan tool MB991958 to confirm a DTC of other systems.

Check if DTC No. P1C16 is stored.

Q: Is diagnostic trouble code stored?

YES : Carry out troubleshooting for DTC No. P1C16
.
NO : Go to Step 3.

STEP 3. Use scan tool MB991958 to confirm a DTC of other systems.

Q: Is diagnostic trouble code of EV-ECU system stored?

YES : Check EV-ECU system.
NO : Go to Step 4.

STEP 4. Use scan tool MB991958 to confirm a DTC of other systems.

Q: Is diagnostic trouble code No. U1100 stored in other ECU?

YES : Replace the EV-ECU.
NO : Go to Step 5.

<New>

STEP 5. Recheck for diagnostic trouble code
Check again if the DTC is stored in the on board charger.
(1)Erase the DTC.
(2)Perform the regular charge..
(3)Check if the DTC is stored.
Q: Is the DTC set?

<Old>

~~**STEP 5. Use scan tool MB991958 to confirm a DTC.**~~

~~**Q: Is the diagnostic trouble code stored?**~~

YES : Replace the on board charger/DC-DC converter.
NO : Intermittent malfunction (Refer to GROUP 00 – How to Use Troubleshooting/Inspection Service Points – How to Cope with Intermittent Malfunctions).

TSB Revision

Attached sheet 5 (34/34)

<New>
STEP 20. Connector check: G-24 inverter (+ terminal) connecor

<Old>
~~**STEP 20. Connector check: G-24 inverter and on board charger/DC-DC converter combination (+ terminal) connector, G-06 inverter (+ terminal) connector**~~

Q: Is the check result normal?

YES : Go to Step 21.
NO : Repair.

<New>
STEP 21. Check harness between G-24 inverter (+ terminal) connector and on board charger/ DC-DC converter connector
・Check power supply line for open circuit and damage.
Q: Is the check result normal?
YES: Go to Step 22.
NO: Repair or replace the inverter and on board charger/DC-DC converter.

<Old>
~~**STEP 21. Check harness between G-24 inverter and on board charger/DC-DC converter combination (+ terminal) connector terminal No. 1 and G-06 inverter (+ terminal) connector terminal No. 1**~~

- Check power supply line for open circuit and damage.

Q: Is the check result normal?

YES : Go to Step 22.
NO : Repair.

<New>
STEP 22. Connector check: G-25 inverter (- terminal) connector

<Old>
~~**STEP 22. Connector check: G-25 inverter and on board charger/DC-DC converter combination (– terminal) connector, G-05 inverter (– terminal) connector**~~

Q: Is the check result normal?

YES : Go to Step 23.
NO : Repair.

<New>
STEP 23. Check harness between G-25 inverter (- terminal) and inverter and on board charger/ DC-DC converter connector
・Check power supply line for open circuit and damage.
Q: Is the check result normal?
YES: Go to Step 7.
NO: Repair or replace the inverter and on board charger/DC-DC converter.

<Old>
~~**STEP 23. Check harness between G-25 inverter and on board charger/DC-DC converter combination (– terminal) connector terminal No. 1 and G-05 inverter (– terminal) connector terminal No. 1**~~

- Check power supply line for open circuit and damage.

Q: Is the check result normal?

YES : Go to Step 7.
NO : Repair.

Inspection Procedure 3: Although regular charging is possible, POWER indicator and CHARGING indicator are not lit.

COMMENTS ON TROUBLE SYMPTOM

If the POWER indicator and the CHARGING indicator are not lit although the regular charging is enabled, the indicator circuit may be failed.

PROBABLE CAUSE

- The charging cable is failed.

DIAGNOSIS CODE PROCEDURES

Code No. P1C00: DCDC Input Voltage Abnormal

High voltage circuit

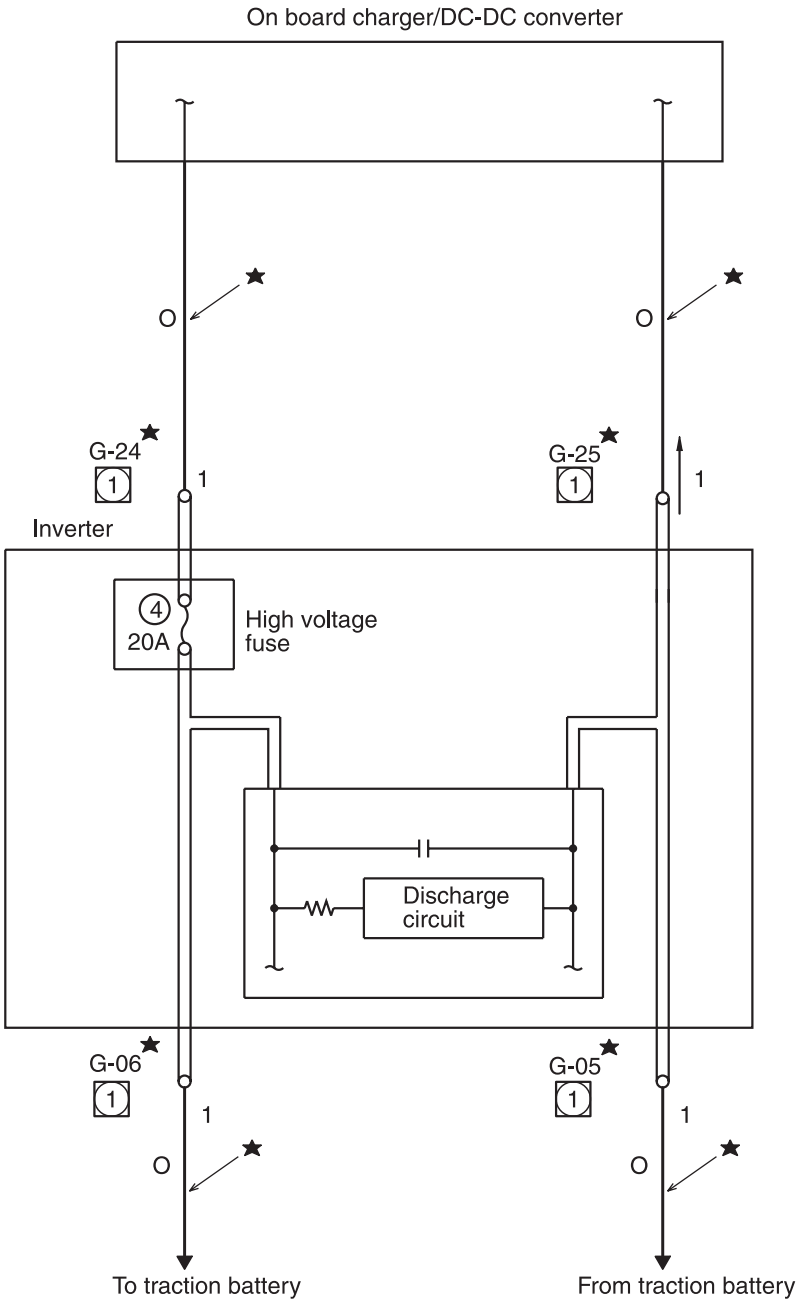

NOTE
★:Indicates the high voltage cables, wiring harnesses or connectors.

Wire colour code
B: Black LG: Light green G: Green L: Blue W: White Y: Yellow SB: Sky blue BR: Brown O: Orange GR: Grey
R: Red P: Pink V: Violet PU: Purple SI: Silver

AKC00303 AB

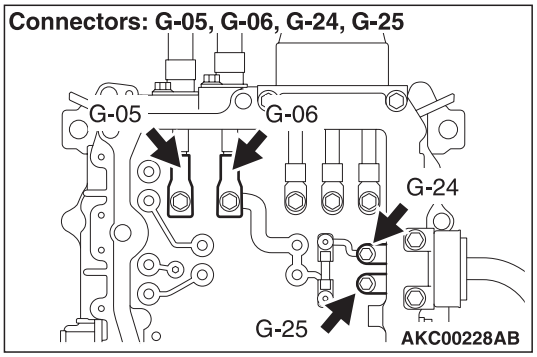

TROUBLE JUDGEMENT

Check Conditions

- The EV-ECU allows the DC-DC converter to operate.

Judgement Criterion

- The input voltage is less than 180 V or more than 420 V.

FAIL-SAFE AND BACKUP FUNCTION

- The output of DC-DC converter is stopped.

PROBABLE CAUSES

- Auxiliary battey is failed.
- High voltage system component of except DC-DC converter is failed.
- EV-ECU is failed.
- Fuse meltdown between DC-DC converter and inverter
- Open circuits or damage of high voltage circuits between DC-DC converter and traction battery; or poor contact of connector
- The DC-DC converter is failed.

DIAGNOSIS PROCEDURE

⚠ DANGER

When high voltage system components are served, be sure to pull service plugs to shut down high voltage (Refer to).

⚠ DANGER

When pulling service plugs, wear the specified protective equipment (Refer to).

STEP 1. M.U.T.-III other system diagnosis code.

Q: Is the diagnosis code of EV-ECU system set?

YES : Check EV-ECU system (Refer to).
NO : Go to Step 2.

STEP 2. Continuity check on fuse between DC-DC converter and inverter

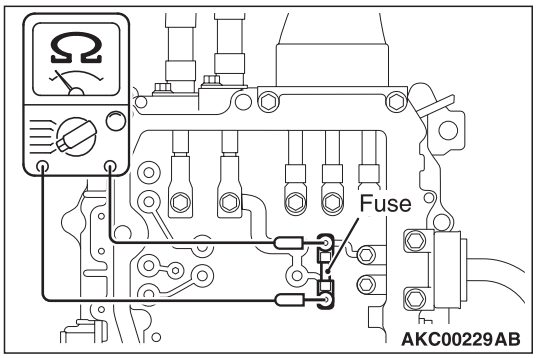

⚠ DANGER

When high voltage system components are served, be sure to pull service plugs to shut down high voltage before serving (Refer to).

⚠ DANGER

When pulling service plugs, wear the specified protective equipment (Refer to).

- Check continuity of fuse both ends.

OK: Continuity

Q: Is the check result normal?
YES : Go to Step 3.
NO : Replace the fuse.

STEP 3. Connector check: G-24 inverter (+ terminal) connector, G-25 inverter (– terminal) connector, G-05 inverter (– terminal) connector, G-06 inverter (+ terminal) connector

Q: Is the check result normal?
YES : Go to Step 4.
NO : Repair.

STEP 4. Check harness between G-24 inverter (+ terminal) connector, G-25 inverter (– terminal) connector and inverter and on board charger/DC-DC converter connector

- Check power supply line for open circuit and damage.

Q: Is the check result normal?
YES : Go to Step 5.
NO : Repair or replace the on board charger/DC-DC converter.

STEP 5. Check harness between G-06 inverter (+ terminal) connector, G-05 inverter (– terminal) connector and G-19 traction battery (+ terminal) connector, G-18 traction battery (– terminal) connector

- Check power supply line for open circuit and damage.

Q: Is the check result normal?

YES : Go to Step 6.

NO : Repair or replace the traction battery cable.

STEP 6. Diagnosis code recheck

Check again if the diagnosis code is set to the DC-DC converter.

(1) Erase the stored diagnosis code.
(2) Set the electric motor switch from the "LOCK" (OFF) position to the "ON", and then to the "START" position temporarily.
(3) Check if the diagnosis code is set.

Q: Is the diagnosis code set?

YES : Replace the on board charger/DC-DC converter.

NO : Intermittent malfunction (Refer to GROUP 00 – How to Use Troubleshooting/ Inspection Service Points – How to Cope with Intermittent Malfunctions).

Code No. P1C02: DCDC Output Voltage Abnormal
Code No. P1C22: DCDC Output Voltage Abnormal (2)

TROUBLE JUDGEMENT

Check Conditions

- The EV-ECU allows the DC-DC converter to operate.

Judgement Criterion

- The output (B terminal) voltage is more than 16.0 V. <P1C02>
- The system detects a failure "overvoltage abnormal detection circuit" in the output section by predetermined times or more.<P1C22>

FAIL-SAFE AND BACKUP FUNCTION

- The output of DC-DC converter is stopped.

PROBABLE CAUSE

- The DC-DC converter is failed.

DIAGNOSIS PROCEDURE

STEP 1. Diagnosis code recheck

Check again if the diagnosis code is set to the DC-DC converter.

(1) Erase the stored diagnosis code.
(2) Set the electric motor switch from the "LOCK" (OFF) position to the "ON", and then to the "START" position temporarily.
(3) Check if the diagnosis code is set.

Q: Is the diagnosis code set?

YES : Replace the on board charger/DC-DC converter.

NO : Intermittent malfunction (Refer to GROUP 00 – How to Use Troubleshooting/ Inspection Service Points – How to Cope with Intermittent Malfunctions).

Code No. P1C04: DCDC Output Voltage Reduction

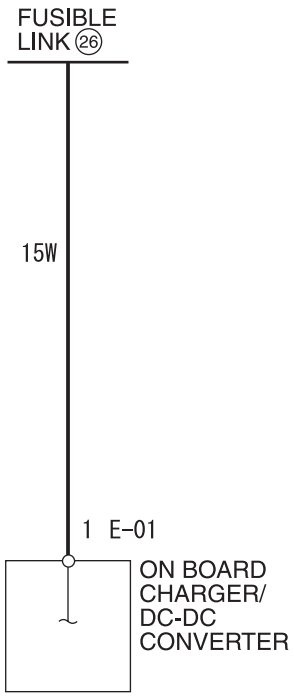

Wire colour code
B : Black LG : Light green G : Green L : Blue W : White Y : Yellow SB : Sky blue
BR : Brown O : Orange GR : Grey R : Red P : Pink V : Violet PU : Purple SI : Silver

AKC00216

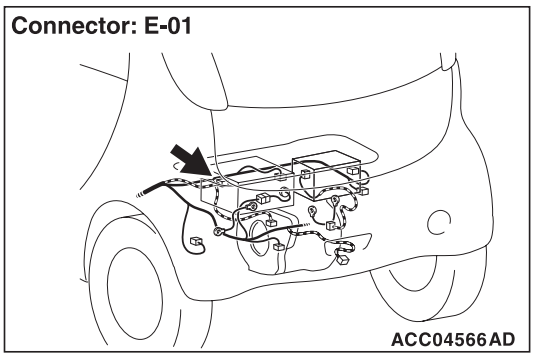

TROUBLE JUDGEMENT

Check Conditions

- The EV-ECU allows the DC-DC converter to operate.

Judgement Criterion

- The output (B terminal) voltage is less than 11.0 V.

FAIL-SAFE AND BACKUP FUNCTION

- The output of DC-DC converter is restricted.

PROBABLE CAUSES

- Auxiliary battery is failed
- The installation of the auxiliary battery terminal is failed.
- The fusible link is fused.
- Open circuits of output (B terminal) voltage, damage or poor contact of connector
- The DC-DC converter is failed.

DIAGNOSIS PROCEDURE

STEP 1. Check auxiliary battery

- Check auxiliary battery (Refer to GROUP 54A – Auxiliary Battery – On-vehicle Service – Battery Test).

Q: Is the check result normal?
YES : Go to Step 2.
NO : Replace the auxiliary battery.

STEP 2. Connector check: E-01 on board charger/DC-DC converter connecter, fusible link (No. 26)

Check the terminals for deformation, looseness, etc.

Q: Is the check result normal?

YES : Go to Step 3.
NO : Repair the damaged connector.

STEP 3. Check the wiring harness between E-01 on board charger/DC-DC converter connector terminal No. 1 and the fusible link (No. 26).
Check the power supply line for open, short circuit and damage.

Q: Is the check result normal?
YES : Go to Step 4.
NO : Repair the wiring harness.

STEP 4. Diagnosis code recheck
Check again if the diagnosis code is set to the DC-DC converter.
(1) Erase the stored diagnosis code.
(2) Set the electric motor switch from the "LOCK" (OFF) position to the "ON", and then to the "START" position temporarily.
(3) Check if the diagnosis code is set.

Q: Is the diagnosis code set?
YES : Replace the on board charger/DC-DC converter.
NO : Intermittent malfunction (Refer to GROUP 00 – How to Use Troubleshooting/ Inspection Service Points – How to Cope with Intermittent Malfunctions).

Code No. P1C06: DCDC IGCT Voltage Abnormal

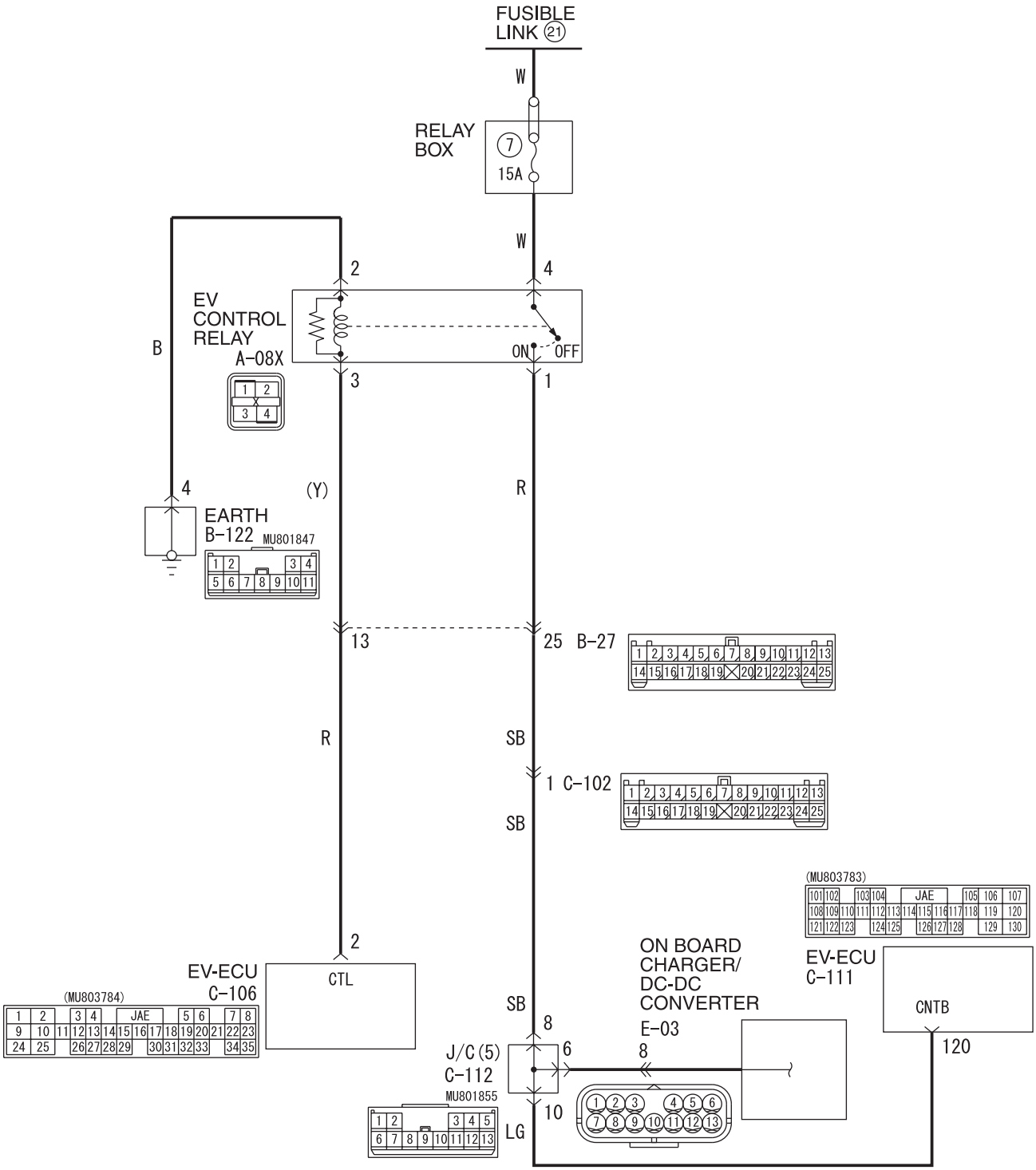

Wire colour code
B : Black LG : Light green G : Green L : Blue W : White Y : Yellow SB : Sky blue
BR : Brown O : Orange GR : Grey R : Red P : Pink V : Violet PU : Purple SI : Silver

AKC00217

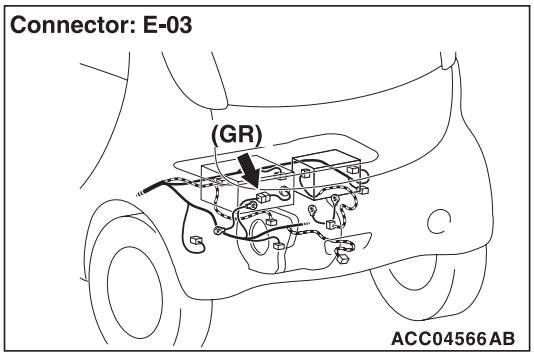

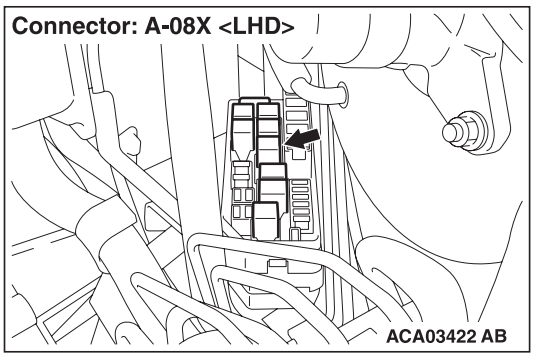

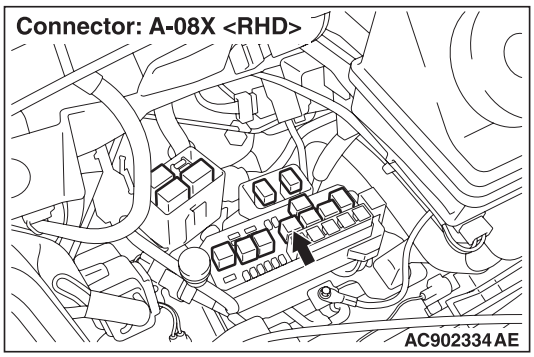

TROUBLE JUDGEMENT

Check Condition

- The EV-ECU is activated.

Judgement Criterion

- The DC-DC converter control power supply voltage is less than 7.2 V.

or

- The DC-DC converter control power supply voltage is more than 17.6 V.

FAIL-SAFE AND BACKUP FUNCTION

- The output of DC-DC converter is stopped.

PROBABLE CAUSES

- 24 V auxiliary battery incorrect connection by user
- The installation of the auxiliary battery terminal is failed.
- The EV control relay is failed.
- Open circuits of DC-DC converter power supply, short circuits to earth, damage or poor contact of connector
- The DC-DC converter is failed.

DIAGNOSIS PROCEDURE

STEP 1. Check auxiliary battery

- Check auxiliary battery (Refer to GROUP 54A – Auxiliary Battery – On-vehicle Service – Battery Test).

Q: Is the check result normal?
YES : Go to Step 2.
NO : Replace the auxiliary battery.

STEP 2. M.U.T.-III other system diagnosis code.

Q: Is diagnosis code of EV-ECU system set?
YES : Check EV-ECU system.
NO : Go to Step 3.

STEP 3. Connector check: E-03 on board charger/DC-DC converter connecter, A-08X EV control relay (relay box) connecter

Q: Is the check result normal?
YES : Go to Step 4.
NO : Repair the damaged connector. Correct or replace the relay box.

STEP 4. Check the wiring harness between A-08X EV control relay (relay box) connector terminal No. 1 and E-03 on board charger/DC-DC converter connector terminal No. 8.

Check the power supply line for open, short circuit and damage.

Q: Is the check result normal?
YES : Go to Step 5.
NO : Repair the wiring harness.

STEP 5. Diagnosis code recheck

Check again if the diagnosis code is set to the DC-DC converter.
(1) Erase the stored diagnosis code.
(2) Set the electric motor switch from the "LOCK" (OFF) position to the "ON", and then to the "START" position temporarily.
(3) Check if the diagnosis code is set.

Q: Is the diagnosis code set?

YES : Replace the on board charger/DC-DC converter.
NO : Intermittent malfunction (Refer to GROUP 00 – How to Use Troubleshooting/ Inspection Service Points – How to Cope with Intermittent Malfunctions).

Code No. P1C08: DCDC Rectifier Temperature
Code No. P1C09: DCDC Inside Temperature

TROUBLE JUDGEMENT

Check Conditions
- The EV-ECU allows the DC-DC converter to operate.

Judgement Criterion
- The rectification area temperature sensor is more than 105° C. <P1C08>
- The temperature sensor in the DC-DC converter is more than 105°C. <P1C09>

FAIL-SAFE AND BACKUP FUNCTION
- The output of DC-DC converter is stopped.

PROBABLE CAUSES
- EV-ECU is failed.
- There is not enough coolant.
- The water pump is failed.
- The radiator fan is failed.
- The temperature sensor installed in the DC-DC converter is failed.

DIAGNOSIS PROCEDURE

STEP 1. M.U.T.-III other system diagnosis code.

Q: Is diagnosis code of EV-ECU system set?
YES : Check EV-ECU system (Refer to).
NO : Go to Step 2.

STEP 2. Check the coolant.

NOTE: If the coolant largely decreases, check whether the coolant leakage exists or not. Repair it if necessary.
- Check on coolant (Refer to GROUP 14 – On-vehicle Service – Coolant Check).

Q: Is the check result normal?
YES : Go to Step 3.
NO : Replace or supply the coolant.

STEP 3. M.U.T.-III actuator test
- Refer to the Actuator Test Reference Table of the EV-ECU, .
  a. Item 3: Water pump actuate
  b. Item 4: Radiator fan 1 actuate
  c. Item 5: Radiator fan 2 actuate
  d. Item 9: Water pump actuate 2

Q: Is the check result normal?
YES : Go to Step 4.
NO : Go to the check procedures for the diagnosis code for the actuator which has an abnormal drive (Refer to).

STEP 4. Diagnosis code recheck

Check again if the diagnosis code is set to the DC-DC converter.
(1) Erase the stored diagnosis code.
(2) Set the electric motor switch from the "LOCK" (OFF) position to the "ON", and then to the "START" position temporarily.
(3) Check if the diagnosis code is set.

Q: Is the diagnosis code set?
YES : Replace the on board charger/DC-DC converter.
NO : Intermittent malfunction (Refer to GROUP 00 – How to Use Troubleshooting/ Inspection Service Points – How to Cope with Intermittent Malfunctions).

Code No. P1C11: DCDC ROM/RAM Fail

TROUBLE JUDGEMENT

Check Condition
- The EV-ECU is activated.

Judgement Criterion
- The ROM is abnormal (checksum is abnormal).

or
- RAM writing/reading error is detected.

FAIL-SAFE AND BACKUP FUNCTION
- The output of DC-DC converter is stopped.

PROBABLE CAUSE
- The DC-DC converter is failed.

DIAGNOSIS PROCEDURE

STEP 1. Diagnosis code recheck

Check again if the diagnosis code is set to the DC-DC converter.
(1) Erase the stored diagnosis code.
(2) Set the electric motor switch from the "LOCK" (OFF) position to the "ON", and then to the "START" position temporarily.
(3) Check if the diagnosis code is set.

Q: Is the diagnosis code set?

YES : Replace the on board charger/DC-DC converter.

NO : Intermittent malfunction (Refer to GROUP 00 – How to Use Troubleshooting/ Inspection Service Points – How to Cope with Intermittent Malfunctions).

Code No. P1C12: DCDC EEPROM Fail

TROUBLE JUDGEMENT

Check Condition and Judgement Criterion
- The abnormality is detected when the EEPROM data are read.

FAIL-SAFE AND BACKUP FUNCTION
- The output of DC-DC converter continues at the initial value.

PROBABLE CAUSE
- The DC-DC converter is failed.

DIAGNOSIS PROCEDURE

STEP 1. Diagnosis code recheck

Check again if the diagnosis code is set to the DC-DC converter.
(1) Erase the stored diagnosis code.
(2) Set the electric motor switch from the "LOCK" (OFF) position to the "ON", and then to the "START" position temporarily.
(3) Check if the diagnosis code is set.

Q: Is the diagnosis code set?

YES : Replace the on board charger/DC-DC converter.

NO : Intermittent malfunction (Refer to GROUP 00 – How to Use Troubleshooting/ Inspection Service Points – How to Cope with Intermittent Malfunctions).

Code No. P1C13: DCDC A/D Converter

TROUBLE JUDGEMENT

Check Condition
- The EV-ECU allows the DC-DC converter to operate.

Judgement Criterion
- When it is detected that the AD conversion module is abnormal (if the conversion time is a time-out in the AD conversion module).

FAIL-SAFE AND BACKUP FUNCTION
- The output of DC-DC converter is stopped.

PROBABLE CAUSE
- The DC-DC converter is failed.

DIAGNOSIS PROCEDURE

STEP 1. Diagnosis code recheck
Check again if the diagnosis code is set to the DC-DC converter.
(1) Erase the stored diagnosis code.
(2) Set the electric motor switch from the "LOCK" (OFF) position to the "ON", and then to the "START" position temporarily.
(3) Check if the diagnosis code is set.

Q: Is the diagnosis code set?
YES : Replace the on board charger/DC-DC converter.
NO : Intermittent malfunction (Refer to GROUP 00 – How to Use Troubleshooting/ Inspection Service Points – How to Cope with Intermittent Malfunctions).

Code No. P1C15: DCDC Output Current Sensor Fail

TROUBLE JUDGEMENT

Check Conditions
- The EV-ECU is activated.

Judgement Criterion
- The output current sensor is abnormal value.

FAIL-SAFE AND BACKUP FUNCTION
- The output DC-DC converter is stopped.

PROBABLE CAUSE
- The DC-DC converter is failed.

DIAGNOSIS PROCEDURE

STEP 1. Diagnosis code recheck
Check again if the diagnosis code is set to the DC-DC converter.
(1) Erase the stored diagnosis code.
(2) Set the electric motor switch from the "LOCK" (OFF) position to the "ON", and then to the "START" position temporarily.
(3) Check if the diagnosis code is set.

Q: Is the diagnosis code set?
YES : Replace the on board charger/DC-DC converter.
NO : Intermittent malfunction (Refer to GROUP 00 – How to Use Troubleshooting/ Inspection Service Points – How to Cope with Intermittent Malfunctions).

Code No. P1C16: Local CAN Communication Fail

TROUBLE JUDGEMENT

Check Conditions
- The EV-ECU is activated.

Judgement Criterion
- Local CAN communication is failed.

FAIL-SAFE AND BACKUP FUNCTION
- The output of DC-DC converter is restricted.

PROBABLE CAUSE
- The DC-DC converter is failed.

DIAGNOSIS PROCEDURE

STEP 1. Diagnosis code recheck
Check again if the diagnosis code is set to the DC-DC converter.
(1) Erase the stored diagnosis code.
(2) Set the electric motor switch from the "LOCK" (OFF) position to the "ON", and then to the "START" position temporarily.
(3) Check if the diagnosis code is set.

Q: Is the diagnosis code set?

YES : Replace the on board charger/DC-DC converter.
NO : Intermittent malfunction (Refer to GROUP 00 – How to Use Troubleshooting/ Inspection Service Points – How to Cope with Intermittent Malfunctions).

Code No. P1C19: DCDC low Temperature

TROUBLE JUDGEMENT

Check Condition
- The EV-ECU allows the DC-DC converter to operate.

Judgement Criterion
- The temperature difference between the rectifier and the internal DC-DC converter temperature sensor is less than -70° C or more than 70° C.

FAIL-SAFE AND BACKUP FUNCTION
- The output of DC-DC converter is stopped.

PROBABLE CAUSE
- The DC-DC converter is failed.

DIAGNOSIS PROCEDURE

STEP 1. Diagnosis code recheck
Check again if the diagnosis code is set to the DC-DC converter.
(1) Erase the stored diagnosis code.
(2) Set the electric motor switch from the "LOCK" (OFF) position to the "ON", and then to the "START" position temporarily.
(3) Check if the diagnosis code is set.

Q: Is the diagnosis code set?
YES : Replace the on board charger/DC-DC converter.
NO : Intermittent malfunction (Refer to GROUP 00 – How to Use Troubleshooting/ Inspection Service Points – How to Cope with Intermittent Malfunctions).

Code No. P1C21: DCDC Input Voltage Abnormal (2)

TROUBLE JUDGEMENT

Check Conditions
- The EV-ECU allows the DC-DC converter to operate.

Judgement Criterion
- The system detects a failure "overvoltage abnormal detection circuit" in the input section by predetermined times or more.

FAIL-SAFE AND BACKUP FUNCTION
- The output of DC-DC converter is stopped.

PROBABLE CAUSE
- The EV-ECU is failed.
- The high voltage system component except DC-DC converter is failed.
- The DC-DC converter is failed.

DIAGNOSIS PROCEDURE

STEP 1. M.U.T.-III other system diagnosis code.

Q: Is diagnosis code of EV-ECU system set?
YES : Check EV-ECU system.
NO : Go to Step 2

STEP 2. Diagnosis code recheck
Check again if the diagnosis code is set to the DC-DC converter.
(1) Erase the stored diagnosis code.
(2) Set the electric motor switch from the "LOCK" (OFF) position to the "ON", and then to the "START" position temporarily.
(3) Check if the diagnosis code is set.

Q: Is the diagnosis code set?

YES : Replace the on board charger/DC-DC converter.
NO : Intermittent malfunction (Refer to GROUP 00 – How to Use Troubleshooting/ Inspection Service Points – How to Cope with Intermittent Malfunctions).

Code No. P1C23: Battery Sensing Voltage Abnormal

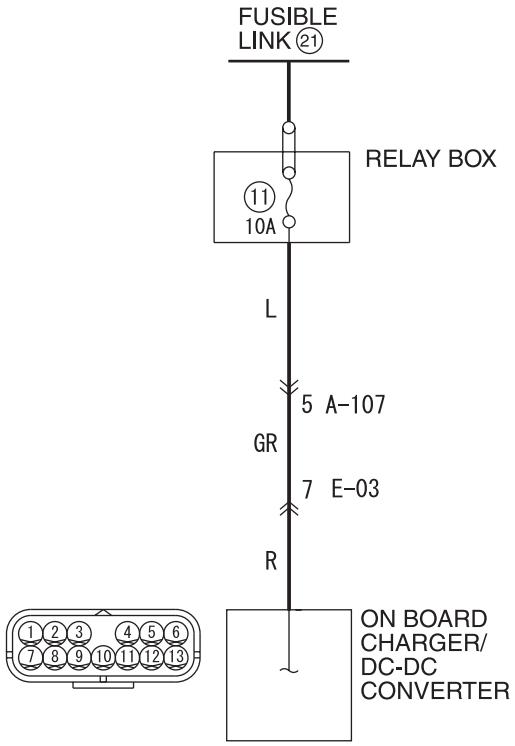

Wire colour code
B : Black LG : Light green G : Green L : Blue W : White Y : Yellow SB : Sky blue
BR : Brown O : Orange GR : Grey R : Red P : Pink V : Violet PU : Purple SI : Silver

AKC00220

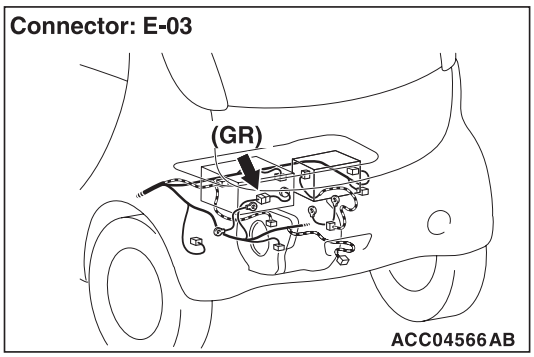

TROUBLE JUDGEMENT

Check Conditions

- The EV-ECU allows the DC-DC converter to operate.

Judgement Criterion

- The difference between the output (B terminal) voltage and the output (S terminal) voltage is less than -3.0 V or more than 3.0 V.

FAIL-SAFE AND BACKUP FUNCTION

- The output of DC-DC converter is restricted.

PROBABLE CAUSES

- Open circuits of output (S terminal) voltage, damage or poor contact of connector
- Open circuits of output (B terminal) voltage
- The DC-DC converter is failed.

DIAGNOSIS PROCEDURE

STEP 1. M.U.T.-III diagnosis code

Q: Is diagnosis code of code No. P1C04 set?
YES : Check output (B terminal) voltage reduction (Refer to Code No. P1C04: DCDC output voltage reduction). Then go to Step 2.
NO : Go to Step 2.

STEP 2. Connector check: E-03 on board charger/DC-DC converter connecter, fuse (No. 11) (relay box connecter)

Q: Is the check result normal?
YES : Go to Step 3.
NO : Repair the damaged connector. Correct or replace the relay box.

STEP 3. Check the wiring harness between E-03 on board charger/DC-DC converter connector terminal No. 7 and the fuse (No. 11) (relay box connecter terminal).
Check the power supply line for open, short circuit and damage.

Q: Is the check result normal?
YES : Go to Step 4.
NO : Repair the wiring harness.

STEP 4. Diagnosis code recheck
Check again if the diagnosis code is set to the DC-DC converter.
(1) Erase the stored diagnosis code.
(2) Set the electric motor switch from the "LOCK" (OFF) position to the "ON", and then to the "START" position temporarily.
(3) Check if the diagnosis code is set.

Q: Is the diagnosis code set?
YES : Replace the on board charger/DC-DC converter.
NO : Intermittent malfunction (Refer to GROUP 00 – How to Use Troubleshooting/ Inspection Service Points – How to Cope with Intermittent Malfunctions).

Code No. P1D00: AC Input Voltage (Low)
Code No. P1D01: AC Input Voltage (High)
Code No. P1D02: AC Input Voltage (Over)

TROUBLE JUDGEMENT

Check Conditions
- While the on board charger is allowed to be charged from the EV-ECU.

Judgement Criterion
- The effective value of AC input voltage is more than 40 V and less than 80 V. <P1D00>

or
- The effective value of AC input voltage is more than 270 V. <P1D01>

or
- The effective value of AC input voltage is more than 300 V for a moment. <P1D02>

FAIL-SAFE AND BACKUP FUNCTION
- The charge is stopped.

PROBABLE CAUSES
- The AC power supply (at the supply side) is failed.
- The charging cable is failed.
- The on board charger is failed.

DIAGNOSIS PROCEDURE

STEP 1. Diagnosis code recheck
Check again if the diagnosis code is set to the on board charger.
(1) Erase the stored diagnosis code.
(2) Perform the regular charge.
(3) Check if the diagnosis code is set.

Q: Is the diagnosis code set?
YES : Go to Step 2.
NO : Check the AC power supply usage conditions used by the users.

STEP 2. Check charging cable
- Check the trouble symptom for charging cable.

Q: Is the check result normal?
YES : Go to Step 3.
NO : Replace the charging cable.

STEP 3. Diagnosis code recheck

Check again if the diagnosis code is set to the on board charger.
(1) Erase the stored diagnosis code.
(2) Perform the regular charge.
(3) Check if the diagnosis code is set.

Q: Is the diagnosis code set?

YES : Replace the on board charger/DC-DC converter.

NO : Intermittent malfunction (Refer to GROUP 00 – How to Use Troubleshooting/ Inspection Service Points – How to Cope with Intermittent Malfunctions).

Code No. P1D03: AC Input Current (High)

TROUBLE JUDGEMENT

Check Conditions

- While the on board charger is allowed to be charged from the EV-ECU.
- While the AC power supply is being input.

Judgement Criterion

- The effective current of AC input current is more than input current maximum value.

FAIL-SAFE AND BACKUP FUNCTION

- The charge is stopped.

PROBABLE CAUSE

- The AC power supply (at the supply side) is failed.
- The charging cable is failed.
- The on board charger is failed.

DIAGNOSIS PROCEDURE

STEP 1. Check charging cable

- Check the trouble symptom for charging cable.

Q: Is the check result normal?

YES : Go to Step 2.

NO : Replace the charging cable.

STEP 2. Diagnosis code recheck

Check again if the diagnosis code is set to the on board charger.
(1) Erase the stored diagnosis code.
(2) Perform the regular charge.
(3) Check if the diagnosis code is set.

Q: Is the diagnosis code set?

YES : Replace the on board charger/DC-DC converter.

NO : Check the AC power supply usage conditions used by the users. If there are no problems, the fault is determined as an intermittent Malfunction (Refer to GROUP 00 – How to Use Troubleshooting/ Inspection Service Points – How to Cope with Intermittent Malfunctions).

Code No. P1D06: Output Voltage (High)

TROUBLE JUDGEMENT

Check Conditions

- While the on board charger is allowed to be charged from the EV-ECU.

Judgement Criterion

- The output (terminal) voltage is more than 400 V.

FAIL-SAFE AND BACKUP FUNCTION

- The charge is stopped.

PROBABLE CAUSES

- The EV-ECU is failed.
- The on board charger is failed.

DIAGNOSIS PROCEDURE

STEP 1. M.U.T.-III diagnosis code

Q: Is diagnosis code of code No. P1D14 set?

YES : Check request voltage malfunction (Refer to Code No. P1D14: Voltage command abnormal).

NO : Go to Step 2.

STEP 2. M.U.T.-III other system diagnosis code.

Q: Is diagnosis code of EV-ECU system set?

YES : Check EV-ECU system.
NO : Go to Step 3.

STEP 3. Diagnosis code recheck
Check again if the diagnosis code is set to the on board charger.
(1) Erase the stored diagnosis code.
(2) Perform the regular charge.
(3) Check if the diagnosis code is set.

Q: Is the diagnosis code set?
YES : Replace the on board charger/DC-DC converter.
NO : Intermittent malfunction (Refer to GROUP 00 – How to Use Troubleshooting/ Inspection Service Points – How to Cope with Intermittent Malfunctions).

Code No. P1D07: Output Voltage (Over)

TROUBLE JUDGEMENT

Check Conditions
- While the on board charger is allowed to be charged from the EV-ECU.

Judgement Criterion
- The system detects overvoltage detection signal by predetermined times or more at the rectification area.

FAIL-SAFE AND BACKUP FUNCTION
- The charge is stopped.

PROBABLE CAUSE
- The traction battery assembly is failed.
- The EV-ECU is failed.
- The on board charger is failed.

DIAGNOSIS PROCEDURE

STEP 1. M.U.T.-III other system diagnosis code.

Q: Is diagnosis code of EV-ECU system set?
YES : Check EV-ECU system.
NO : Go to Step 2.

STEP 2. Diagnosis code recheck
Check again if the diagnosis code is set to the on board charger.
(1) Erase the stored diagnosis code.
(2) Perform the regular charge.
(3) Check if the diagnosis code is set.

Q: Is the diagnosis code set?
YES : Replace the on board charger/DC-DC converter.
NO : Intermittent malfunction (Refer to GROUP 00 – How to Use Troubleshooting/ Inspection Service Points – How to Cope with Intermittent Malfunctions).

Code No. P1D08: Load Connection Abnormal

High voltage circuit

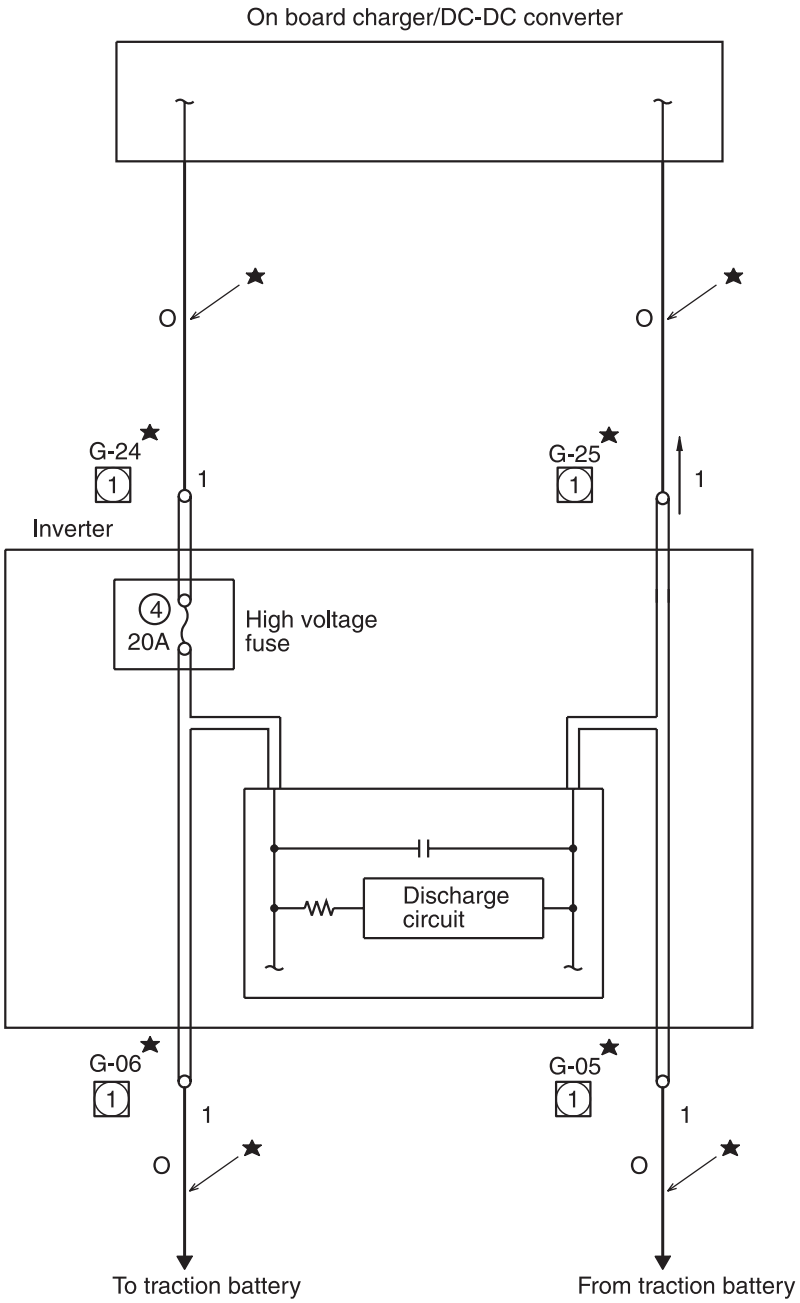

NOTE
★:Indicates the high voltage cables, wiring harnesses or connectors.

Wire colour code
B: Black LG: Light green G: Green L: Blue W: White Y: Yellow SB: Sky blue BR: Brown O: Orange GR: Grey
R: Red P: Pink V: Violet PU: Purple SI: Silver

AKC00303 AB

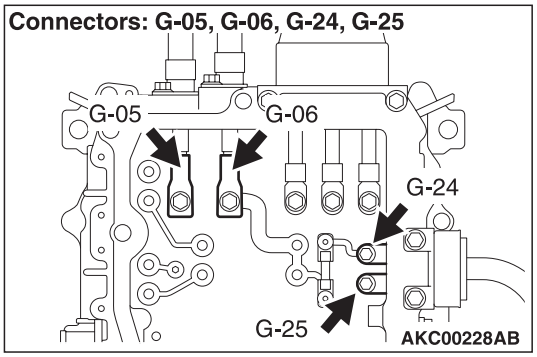

TROUBLE JUDGEMENT

Check Conditions

- While the on board charger is allowed to be charged from the EV-ECU.

Judgement Criterion

- The output (terminal) voltage is less than 180 V.

FAIL-SAFE AND BACKUP FUNCTION

- The charge is stopped.

PROBABLE CAUSES

- The traction battery assembly is failed.
- Fuse meltdown between on board charger and inverter
- Open circuits or damage of high voltage circuits between on board charger and traction battery; or poor contact of connector
- The on board charger is failed.

DIAGNOSIS PROCEDURE

⚠ DANGER

When high voltage system components are served, be sure to pull service plugs to shut down high voltage .

⚠ DANGER

When pulling service plugs, wear the specified protective equipment .

STEP 1. M.U.T.-III other system diagnosis code.

Q: Is the diagnosis code of EV-ECU system set?
YES : Check EV-ECU system.
NO : Go to Step 2.

STEP 2. Continuity check on fuse between on board charger and inverter

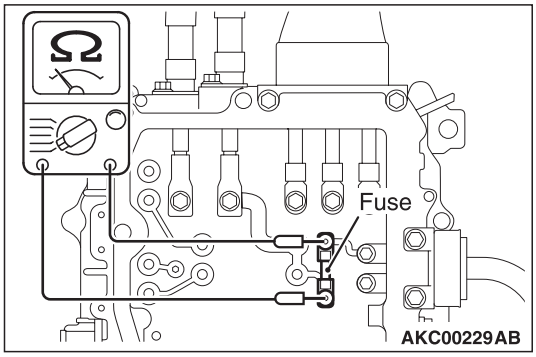

⚠ DANGER

When high voltage system components are served, be sure to pull service plugs to shut down high voltage before serving .

⚠ DANGER

When pulling service plugs, wear the specified protective equipment .

- Check continuity of fuse both ends.

OK: Continuity

Q: Is the check result normal?
YES : Go to Step 3.
NO : Replace the fuse.

STEP 3. Connector check: G-24 inverter (+ terminal) connector, G-25 inverter (– terminal) connector, G-05 inverter (– terminal) connector, G-06 inverter (+ terminal) connector

Q: Is the check result normal?
YES : Go to Step 4.
NO : Repair.

STEP 4. Check harness between G-24 inverter (+ terminal) connector, G-25 inverter (– terminal) connector and inverter and on board charger/DC-DC converter connector

- Check power supply line for open circuit and damage.

Q: Is the check result normal?
YES : Go to Step 5.
NO : Repair or replace the on board charger/DC-DC converter.

STEP 5. Check harness between G-06 inverter (+ terminal) connector, G-05 inverter (– terminal) connector and G-19 traction battery (+ terminal) connector, G-18 traction battery (– terminal) connector

- Check power supply line for open circuit and damage.

Q: Is the check result normal?

YES : Go to Step 6.

NO : Repair or replace the traction battery cable.

STEP 6. Diagnosis code recheck

Check again if the diagnosis code is set to the on board charger.

(1) Erase the stored diagnosis code.
(2) Perform the regular charge.
(3) Check if the diagnosis code is set.

Q: Is the diagnosis code set?

YES : Replace the on board charger/DC-DC converter.

NO : Intermittent malfunction (Refer to GROUP 00 – How to Use Troubleshooting/ Inspection Service Points – How to Cope with Intermittent Malfunctions).

Code No. P1D09: Output Current (High)
Code No. P1D10: Output Current (Control Fail)

TROUBLE JUDGEMENT

Check Conditions

- While the on board charger is allowed to be charged from the EV-ECU.
- While the AC power supply is being input.

Judgement Criterion

- When the input voltage is AC 100 V, the output current is more than 7.0 A. <P1D09>

or

- When the input voltage is AC 200 V, the output current is more than 10.0 A. <P1D09>

or

- The difference between the target output current and the output current is more than 1.0 A or less than -1.0 A. <P1D10>

FAIL-SAFE AND BACKUP FUNCTION

- The charge is stopped.

PROBABLE CAUSES

- The EV-ECU is failed.
- The on board charger is failed.

DIAGNOSIS PROCEDURE

STEP 1. M.U.T.-III diagnosis code

Q: Is diagnosis code of Code No. P1D15 set?

YES : Check current command abnormal (Refer to Code No. P1D15: Current command abnormal).

NO : Go to Step 2.

STEP 2. M.U.T.-III other system diagnosis code.

Q: Is diagnosis code of EV-ECU system set?

YES : Check EV-ECU system.

NO : Go to Step 3.

STEP 3. Diagnosis code recheck

Check again if the diagnosis code is set to the on board charger.

(1) Erase the stored diagnosis code.
(2) Perform the regular charge.
(3) Check if the diagnosis code is set.

Q: Is the diagnosis code set?

YES : Replace the on board charger/DC-DC converter.

NO : Intermittent malfunction (Refer to GROUP 00 – How to Use Troubleshooting/ Inspection Service Points – How to Cope with Intermittent Malfunctions).

Code No. P1D11: Output Current (Over)

TROUBLE JUDGEMENT

Check Conditions

- While the on board charger is allowed to be charged from the EV-ECU.

Judgement Criterion

- The system detects overcurrent detection signal in the output section by predetermined times or more.

FAIL-SAFE AND BACKUP FUNCTION

- The charge is stopped.

PROBABLE CAUSE

- The on board charger is failed.

DIAGNOSIS PROCEDURE

STEP 1. Diagnosis code recheck

Check again if the diagnosis code is set to the on board charger.

(1) Erase the stored diagnosis code.
(2) Perform the regular charge.
(3) Check if the diagnosis code is set.

Q: Is the diagnosis code set?

YES : Replace the on board charger/DC-DC converter.

NO : Intermittent malfunction (Refer to GROUP 00 – How to Use Troubleshooting/ Inspection Service Points – How to Cope with Intermittent Malfunctions).

Code No. P1D13: IGCG Voltage Abnormal

On board charger control power supply circuit

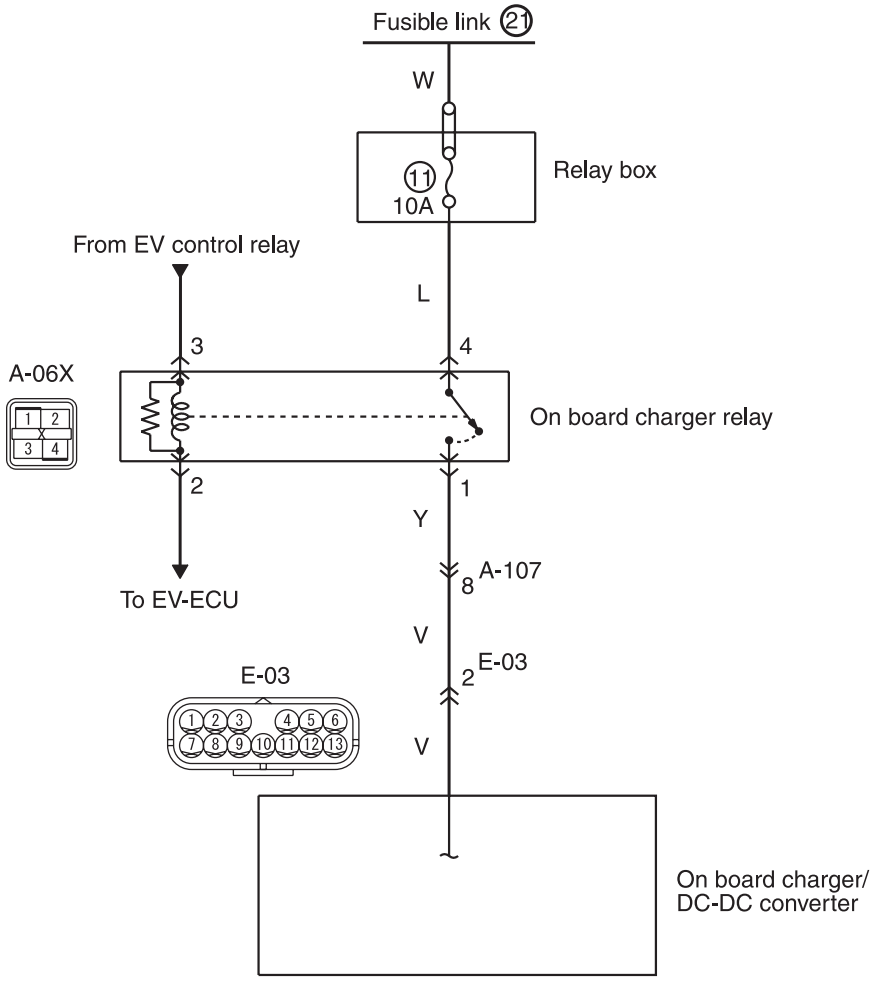

Wire colour code
B: Black LG: Light green G: Green L: Blue W: White Y: Yellow SB: Sky blue BR: Brown O: Orange GR: Grey
R: Red P: Pink V: Violet PU: Purple SI: Silver

AKB00011AB

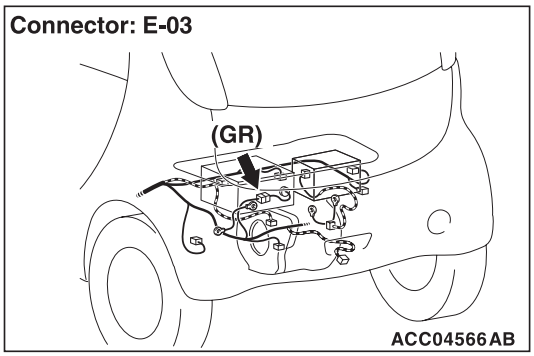

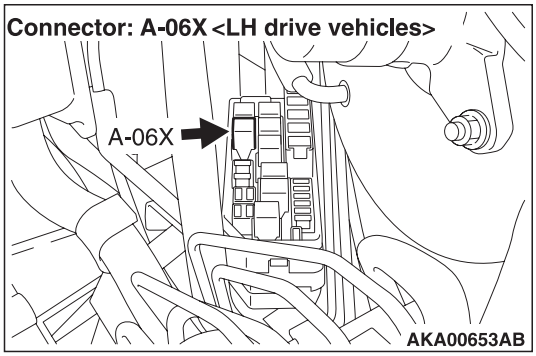

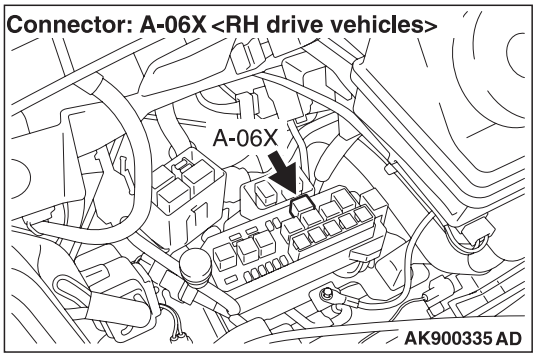

TROUBLE JUDGEMENT

Check Condition

- While the on board charger is allowed to be charged from the EV-ECU.

Judgement Criterion

- The on board charger control power supply voltage is less than 7.2 V.

or

- The on board charger control power supply voltage is more than 17.6 V.

FAIL-SAFE AND BACKUP FUNCTION

- The charge is stopped.

PROBABLE CAUSES

- 24 V auxiliary battery incorrect connection by user
- The installation of the auxiliary battery terminal is failed.
- The on board charger relay is failed.
- Open circuits of on board charger power supply, short circuits to earth or damage; poor contact of connector
- The on board charger is failed.

DIAGNOSIS PROCEDURE

STEP 1. Check auxiliary battery

- Check auxiliary battery (Refer to GROUP 54A – Auxiliary Battery – On-vehicle Service – Battery Test).

Q: Is the check result normal?
YES : Go to Step 2.
NO : Replace the auxiliary battery.

STEP 2. M.U.T.-III other system diagnosis code.

Q: Is diagnosis code of EV-ECU system set?
YES : Check EV-ECU system.
NO : Go to Step 3.

STEP 3. Perform voltage measurement at A-06X on boar charger relay (relay box) connecter

(1) Disconnect the A-06X on board charger relay, and measure the voltage at the wiring harness side.
(2) Voltage between terminal No. 4 and earth.

OK: Battery voltage

Q: Is the check result normal?
YES : Go to Step 6.
NO : Go to Step 4.

STEP 4. Connector check: A-06X on boar charger relay (relay box) connecter

Q: Is the check result normal?
YES : Go to Step 5.
NO : Correct or replace the relay box.

STEP 5. Check the wiring harness between A-06X on boar charger relay (relay box) connector terminal No. 4 and the relay box fuse (No. 11).

Check the power supply line for open, short circuit and damage.

Q: Is the check result normal?
YES : Go to Step 6.
NO : Repair the wiring harness.

STEP 6. Check A-06X on board charger relay itself.

- Check on board charger relay itself (Refer to P.54D-627).

Q: Is the check result normal?
YES : Go to Step 7.
NO : Replace the on board charger relay.

STEP 7. Connector check: E-03 on board charger/DC-DC converter, A-06X on board charger relay (relay box) connecter

Q: Is the check result normal?
YES : Go to Step 8.
NO : Repair the damaged connector. Or, correct or replace the relay box.

STEP 8. Check harness between A-06X (terminal No. 1) on board charger relay connector and E-03 (terminal No. 2) on board charger/DC-DC converter connector

NOTE: Before checking harness, check intermediate connector A-107, and repair if necessary.

- Check output line for damage.

Q: Is the check result normal?
YES : Go to Step 9.
NO : Repair.

STEP 9. Diagnosis code recheck

Check again if the diagnosis code is set to the on board charger.
(1) Erase the stored diagnosis code.
(2) Perform the regular charge.
(3) Check if the diagnosis code is set.

Q: Is the diagnosis code set?
YES : Replace the on board charger/DC-DC converter.
NO : Intermittent malfunction (Refer to GROUP 00 – How to Use Troubleshooting/ Inspection Service Points – How to Cope with Intermittent Malfunctions).

Code No. P1D14: Voltage Command Abnormal

TROUBLE JUDGEMENT

Check Conditions

- While the on board charger is allowed to be charged from the EV-ECU.
- While the AC power supply is being input.

Judgement Criterion

- The charging voltage command from the EV-ECU exceeds 370 V (upper limit).

or

- The charging voltage command from the EV-ECU is less than 0 V.

FAIL-SAFE AND BACKUP FUNCTION

- The charge is stopped.

PROBABLE CAUSES

- The EV-ECU is failed.
- The on board charger is failed.

DIAGNOSIS PROCEDURE

STEP 1. M.U.T.-III other system diagnosis code.

Q: Is diagnosis code of EV-ECU system set?
YES : Check EV-ECU system.
NO : Go to Step 2.

STEP 2. Diagnosis code recheck

Check again if the diagnosis code is set to the on board charger.
(1) Erase the stored diagnosis code.
(2) Perform the regular charge.
(3) Check if the diagnosis code is set.

Q: Is the diagnosis code set?
YES : Replace the on board charger/DC-DC converter.
NO : Intermittent malfunction (Refer to GROUP 00 – How to Use Troubleshooting/ Inspection Service Points – How to Cope with Intermittent Malfunctions).

Code No. P1D15: Current Command Abnormal

TROUBLE JUDGEMENT

Check Conditions

- While the on board charger is allowed to be charged from the EV-ECU.

Judgement Criterion

- The charging current command from the EV-ECU is more than 5.5 A (upper limit of judgement that 100 V is received).

or

- The charging current command from the EV-ECU is more than 10 A (upper limit of judgement that 200 V is received).

FAIL-SAFE AND BACKUP FUNCTION

- The charge is stopped.

PROBABLE CAUSES

- The EV-ECU is failed.
- The on board charger is failed.

DIAGNOSIS PROCEDURE

STEP 1. M.U.T.-III other system diagnosis code.

Q: Is diagnosis code of EV-ECU system set?
YES : Check EV-ECU system.
NO : Go to Step 2.

STEP 2. Diagnosis code recheck
Check again if the diagnosis code is set to the on board charger.
(1) Erase the stored diagnosis code.
(2) Perform the regular charge.
(3) Check if the diagnosis code is set.

Q: Is the diagnosis code set?
YES : Replace the on board charger/DC-DC converter.
NO : Intermittent malfunction (Refer to GROUP 00 – How to Use Troubleshooting/ Inspection Service Points – How to Cope with Intermittent Malfunctions).

Code No. P1D16: Pilot Signal (Charge not Allowed)
Code No. P1D17: Pilot Signal (Communication)
Code No. P1D18: Pilot Signal Frequency Abnormal
Code No. P1D43: Pilot Signal Voltage

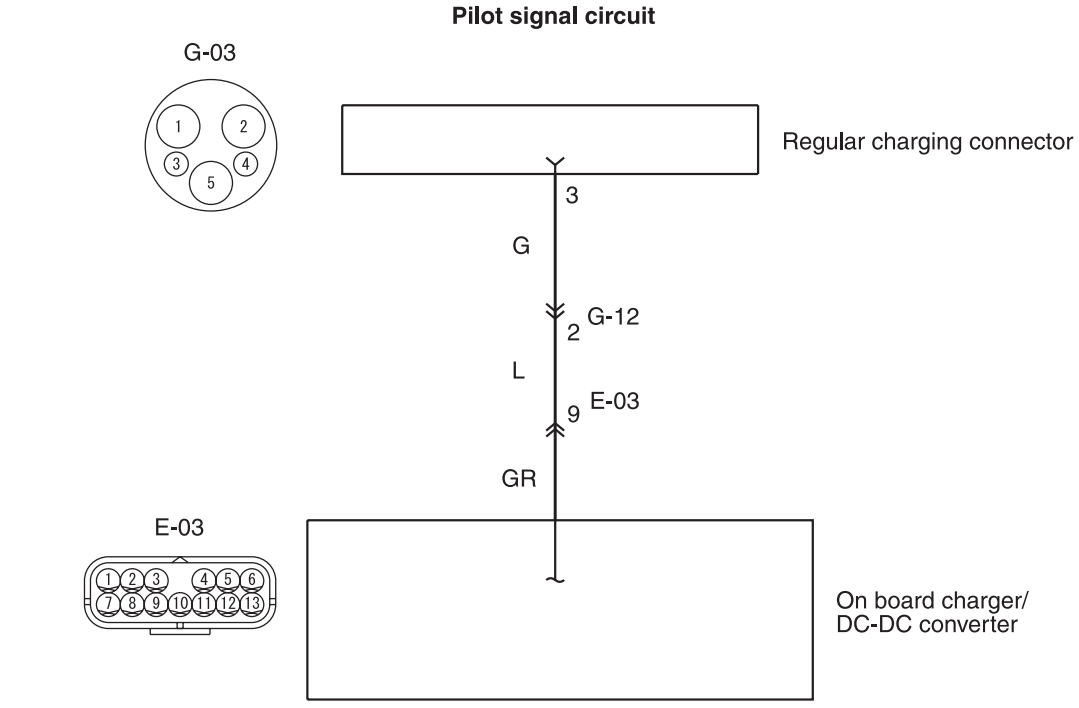

Wire colour code
B: Black LG: Light green G: Green L: Blue W: White Y: Yellow SB: Sky blue BR: Brown O: Orange GR: Grey
R: Red P: Pink V: Violet PU: Purple SI: Silver

AKB00015AB

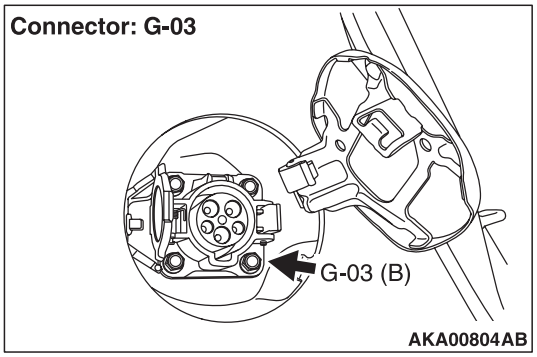

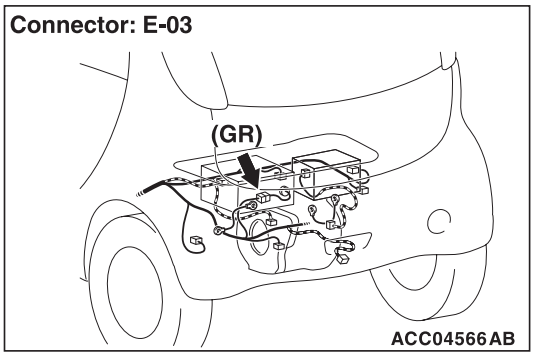

TROUBLE JUDGEMENT

Check Conditions

- While the on board charger is allowed to be charged from the EV-ECU.

Judgement Criterion

- The pilot frequency is from 970 Hz to 1,030Hz and the pilot signal duty ratio is less than 3 %. <P1D16>

or

- The pilot frequency is from 970 Hz to 1,030Hz and the pilot signal duty ratio is from 7 % to 8 %. <P1D16>

or

- The pilot frequency is from 970 Hz to 1,030Hz and the pilot signal duty ratio is more than 97 %. <P1D16>

or

- The pilot frequency is from 970 Hz to 1,030Hz and the pilot signal duty ratio is from 3 % to 7 %. <P1D17>

or

- The pilot frequency is less than 970 Hz. <P1D18>

or

- The pilot frequency is more than 1,030 Hz. <P1D18>

or

- When the system is in charging standby, the pilot signal voltage is 9 V. <P1D43>

or

- When the system is in charging standby, the pilot signal voltage is except 9 V, or when the system is in charging, the pilot signal voltage is except 6 V. <P1D43>

FAIL-SAFE AND BACKUP FUNCTION

- The charge is stopped.

PROBABLE CAUSES

- The charging cable is failed.
- Open circuits of pilot signal circuit, short circuits to earth, short circuits to power supply system and damage; poor contacts of connector
- The on board charger is failed.
- The earth of power supply facility is failed.

DIAGNOSIS PROCEDURE

STEP 1. Check the control box status of the charging cable.

- During the regular charging.

Q: Is the FAULT indicator lit or blinked?

YES : Refer to Inspection Procedure: FAULT indicator is lit , FAULT indicator blinks.

NO : Go to Step 2.

STEP 2. Check pilot signal terminal itself.

- Check charging cable.

Q: Is the check result normal?

YES : Go to Step 3.

NO : Replace the charging cable.

STEP 3. Connector check: G-03 regular charging connector and E-03 on board charger/DC-DC converter connector.

Q: Are the check results normal?

YES : Go to Step 4.

NO : Repair or replace the connector.

STEP 4. Check harness between G-03 (terminal No. 3) regular charging connector and E-03 (terminal No. 9) on board charger/DC-DC converter.

NOTE: Before checking harness, check intermediate connector G-12, and repair if necessary.

- Check the signal line for open circuits, short circuits to earth and damage.

Q: Is the check result normal?

YES : Go to Step 5.

NO : Repair the damaged harness wire.

STEP 5. Diagnosis code recheck
Check again if the diagnosis code is set to the on board charger.
(1) Erase the stored diagnosis code.
(2) Perform the regular charge.
(3) Check if the diagnosis code is set.

Q: Is the diagnosis code set?
YES : Go to Step 6.
NO : Intermittent malfunction (Refer to GROUP 00 – How to Use Troubleshooting/ Inspection Service Points – How to Cope with Intermittent Malfunctions).

STEP 6. Check earth of power supply facility

Q: Is the check result normal?
YES : Go to Step 7.
NO : Repair the power supply facility.

STEP 7. Diagnosis code recheck
Check again if the diagnosis code is set to the on board charger.
(1) Erase the stored diagnosis code.
(2) Perform the regular charge.
(3) Check if the diagnosis code is set.

Q: Is the diagnosis code set?
YES : Replace the on board charger/DC-DC converter.
NO : Intermittent malfunction (Refer to GROUP 00 – How to Use Troubleshooting/ Inspection Service Points – How to Cope with Intermittent Malfunctions).

Code No. P1D23: Power Circuit (Pre-charge fail)

TROUBLE JUDGEMENT

Check Conditions
- While the on board charger is allowed to be charged from the EV-ECU.
- While the AC power supply is being input.

Judgement Criterion
- The power factor improvement circuit voltage is more than overcurrent detection signal by predetermined times.

FAIL-SAFE AND BACKUP FUNCTION
- The charge is stopped.

PROBABLE CAUSE
- The on board charger is failed.

DIAGNOSIS PROCEDURE

STEP 1. Diagnosis code recheck
Check again if the diagnosis code is set to the on board charger.
(1) Erase the stored diagnosis code.
(2) Perform the regular charge.
(3) Check if the diagnosis code is set.

Q: Is the diagnosis code set?
YES : Replace the on board charger/DC-DC converter.
NO : Intermittent malfunction (Refer to GROUP 00 – How to Use Troubleshooting/ Inspection Service Points – How to Cope with Intermittent Malfunctions).

Code No. P1D25: Inverter Output Current

TROUBLE JUDGEMENT

Check Conditions
- While the on board charger is allowed to be charged from the EV-ECU.

Judgement Criterion
- The system detects overcurrent detection signal by predetermined times or more at the section where voltage rises.

FAIL-SAFE AND BACKUP FUNCTION
- The AC power supply (at the supply side) is failed.
- The charge is stopped.

PROBABLE CAUSE
- The on board charger is failed.

DIAGNOSIS PROCEDURE

STEP 1. Diagnosis code recheck
Check again if the diagnosis code is set to the on board charger.
(1) Erase the stored diagnosis code.
(2) Perform the regular charge.

(3) Check if the diagnosis code is set.

Q: Is the diagnosis code set?

YES : Replace the on board charger/DC-DC converter.
NO : Intermittent malfunction (Refer to GROUP 00 – How to Use Troubleshooting/ Inspection Service Points – How to Cope with Intermittent Malfunctions).

Code No. P1D26: Internal Temperature
Code No. P1D27: PFC Temperature
Code No. P1D40: Rectifier Coil Temperature
Code No. P1D41: Input Diode Temperature

TROUBLE JUDGEMENT

Check Conditions

- While the on board charger is allowed to be charged from the EV-ECU.

Judgement Criterion

- The inside ambient temperature sensor is more than 110° C. <P1D26>
- The power factor improvement circuit temperature sensor is more than 110° C. <P1D27>
- The coil of rectification area temperature sensor is more than 110° C. <P1D40>
- The input diode area temperature sensor is more than 110° C. <P1D41>

FAIL-SAFE AND BACKUP FUNCTION

- The charge is stopped.

PROBABLE CAUSES

- The EV-ECU is failed.
- There is not enough coolant.
- The water pump is failed.
- The radiator fan is failed.
- The temperature sensor installed in the on board charger is failed.

DIAGNOSIS PROCEDURE

STEP 1. M.U.T.-III other system diagnosis code.

Q: Is diagnosis code of EV-ECU system set?
YES : Check EV-ECU system.
NO : Go to Step 2.

STEP 2. Check the coolant.

NOTE: If the coolant largely decreases, check whether the coolant leakage exists or not. Repair it if necessary.

- Check on coolant (Refer to GROUP 14 – On-vehicle Service – Coolant Check).

Q: Is the check result normal?
YES : Go to Step 3.
NO : Replace or supply the coolant.

STEP 3. M.U.T.-III actuator test

- Refer to the Actuator Test Reference Table of the EV-ECU.
  a. Item 3: Water pump actuate
  b. Item 4: Radiator fan 1 actuate
  c. Item 5: Radiator fan 2 actuate
  d. Item 9: Water pump actuate 2

Q: Is the check result normal?
YES : Go to Step 4.
NO : Go to the check procedures for the diagnosis code for the actuator which has an abnormal drive.

STEP 4. Diagnosis code recheck

Check again if the diagnosis code is set to the on board charger.
(1) Erase the stored diagnosis code.
(2) Perform the regular charge.
(3) Check if the diagnosis code is set.

Q: Is the diagnosis code set?
YES : Replace the on board charger/DC-DC converter.
NO : Intermittent malfunction (Refer to GROUP 00 – How to Use Troubleshooting/ Inspection Service Points – How to Cope with Intermittent Malfunctions).

Code No. P1D31: ROM/RAM Fail

TROUBLE JUDGEMENT

Check Condition
- While the on board charger is allowed to be charged from the EV-ECU.

Judgement Criterion
- The ROM is abnormal (checksum is abnormal).

or
- RAM writing/reading error is detected.

FAIL-SAFE AND BACKUP FUNCTION
- The charge is stopped.

PROBABLE CAUSE
- The on board charger is failed.

DIAGNOSIS PROCEDURE

STEP 1. Diagnosis code recheck

Check again if the diagnosis code is set to the on board charger.
(1) Erase the stored diagnosis code.
(2) Perform the regular charge.
(3) Check if the diagnosis code is set.

Q: Is the diagnosis code set?

YES : Replace the on board charger/DC-DC converter.

NO : Intermittent malfunction (Refer to GROUP 00 – How to Use Troubleshooting/ Inspection Service Points – How to Cope with Intermittent Malfunctions).

Code No. P1D32: EEPROM Fail

TROUBLE JUDGEMENT

Check Condition and Judgement Criterion
- The abnormality is detected when the EEPROM data are read.

FAIL-SAFE AND BACKUP FUNCTION
- The charge continues at the initial value.

PROBABLE CAUSE
- The on board charger is failed.

DIAGNOSIS PROCEDURE

STEP 1. Diagnosis code recheck

Check again if the diagnosis code is set to the on board charger.
(1) Erase the stored diagnosis code.
(2) Perform the regular charge.
(3) Check if the diagnosis code is set.

Q: Is the diagnosis code set?

YES : Replace the on board charger/DC-DC converter.

NO : Intermittent malfunction (Refer to GROUP 00 – How to Use Troubleshooting/ Inspection Service Points – How to Cope with Intermittent Malfunctions).

Code No. P1D33: AD Converter Abnormal

TROUBLE JUDGEMENT

Check Condition
- While the on board charger is allowed to be charged from the EV-ECU.

Judgement Criterion
- When it is detected that the AD conversion module is abnormal (if the conversion time is a time-out in the AD conversion module).

FAIL-SAFE AND BACKUP FUNCTION
- The charge is stopped.

PROBABLE CAUSE
- The on board charger is failed.

DIAGNOSIS PROCEDURE

STEP 1. Diagnosis code recheck
Check again if the diagnosis code is set to the on board charger.
(1) Erase the stored diagnosis code.
(2) Perform the regular charge.
(3) Check if the diagnosis code is set.

Q: Is the diagnosis code set?
YES : Replace the on board charger/DC-DC converter.
NO : Intermittent malfunction (Refer to GROUP 00 – How to Use Troubleshooting/ Inspection Service Points – How to Cope with Intermittent Malfunctions).

Code No. P1D34: Input Current Sensor Fail
Code No. P1D35: Output Current Sensor Fail

TROUBLE JUDGEMENT

Check Conditions
- When the charging cable is connected.

Judgement Criterion
- Input current is abnormal value. <P1D34>
- The output current is abnormal value. <P1D35>

FAIL-SAFE AND BACKUP FUNCTION
- The charge is stopped.

PROBABLE CAUSE
- The on board charger is failed.

DIAGNOSIS PROCEDURE

STEP 1. Diagnosis code recheck
Check again if the diagnosis code is set to the on board charger.
(1) Erase the stored diagnosis code.
(2) Perform the regular charge.
(3) Check if the diagnosis code is set.

Q: Is the diagnosis code set?
YES : Replace the on board charger/DC-DC converter.
NO : Intermittent malfunction (Refer to GROUP 00 – How to Use Troubleshooting/ Inspection Service Points – How to Cope with Intermittent Malfunctions).

Code No. P1D37: AC Power Supply/ AC Input Fuse 1
Code No. P1D44: Power Supply Equipment Abnormal

TROUBLE JUDGEMENT

Check Conditions
- While the on board charger is allowed to be charged from the EV-ECU.

Judgement Criterion
- The pilot signal duty ratio is from 8 % to 97 %. <P1D37>

and
- The AC input voltage is less than 80 V. <P1D37>

or
- The AC input voltage is less than -20 A or more than 20 A. <P1D44>

FAIL-SAFE AND BACKUP FUNCTION
- The charge is stopped.

PROBABLE CAUSES
- The AC power supply (at the supply side) is failed.
- The charging cable is failed.
- The on board charger is failed.

DIAGNOSIS PROCEDURE

STEP 1. Diagnosis code recheck
Check again if the diagnosis code is set to the on board charger.
(1) Erase the stored diagnosis code.
(2) Perform the regular charge.
(3) Check if the diagnosis code is set.

Q: Is the diagnosis code set?
YES : Go to Step 2.
NO : Check the AC power supply usage conditions used by the users.

STEP 2. Check charging cable
- Check the trouble symptom for charging cable.

Q: Is the check result normal?
YES : Go to Step 3.
NO : Replace the charging cable.

STEP 3. Diagnosis code recheck
Check again if the diagnosis code is set to the on board charger.
(1) Erase the stored diagnosis code.
(2) Perform the regular charge.
(3) Check if the diagnosis code is set.

Q: Is the diagnosis code set?
YES : Replace the on board charger/DC-DC converter.
NO : Intermittent malfunction (Refer to GROUP 00 – How to Use Troubleshooting/ Inspection Service Points – How to Cope with Intermittent Malfunctions).

Code No. P1D42: Temperature Sensor

TROUBLE JUDGEMENT

Check Condition
- While the on board charger is allowed to be charged from the EV-ECU.

Judgement Criterion
- The difference between the maximum value and mean value which the temperature sensors detect is less than -50° C or more than 50° C.

FAIL-SAFE AND BACKUP FUNCTION
- The charge is stopped.

PROBABLE CAUSE
- The on board charger is failed.

DIAGNOSIS PROCEDURE

STEP 1. Diagnosis code recheck
Check again if the diagnosis code is set to the on board charger.
(1) Erase the stored diagnosis code.
(2) Perform the regular charge.
(3) Check if the diagnosis code is set.

Q: Is the diagnosis code set?
YES : Replace the on board charger/DC-DC converter.
NO : Intermittent malfunction (Refer to GROUP 00 – How to Use Troubleshooting/ Inspection Service Points – How to Cope with Intermittent Malfunctions).

Code No. P1D45: Failure Detection Circuit

TROUBLE JUDGEMENT

Check Conditions
- When the charging cable is connected.

Judgement Criterion
- The system detects overcurrent detection signal by predetermined times or more at the section where voltage rises.

or
- The system detects overvoltage detection signal by predetermined times or more at the rectification area.

or
- The system detects overcurrent detection signal by predetermined times or more at the rectification area.

FAIL-SAFE AND BACKUP FUNCTION
- The charge is stopped.

PROBABLE CAUSE
- The on board charger is failed.

DIAGNOSIS PROCEDURE

STEP 1. Diagnosis code recheck
Check again if the diagnosis code is set to the on board charger.
(1) Erase the stored diagnosis code.
(2) Perform the regular charge.
(3) Check if the diagnosis code is set.

Q: Is the diagnosis code set?

YES : Replace the on board charger/DC-DC converter.
NO : Intermittent malfunction (Refer to GROUP 00 – How to Use Troubleshooting/ Inspection Service Points – How to Cope with Intermittent Malfunctions).

Code No. U1100: EV ECU CAN Timeout (1)

TROUBLE JUDGEMENT

Check Condition

- While the on board charger is allowed to be charged from the EV-ECU. <On board charger>

or

- EV-ECU is being activated. <DC-DC converter>

Judgement Criterion

- The CAN communication data cannot be received from the EV-ECU.

FAIL-SAFE AND BACKUP FUNCTION

- The charge is stopped. <On board charger>

or

- The output is restricted. <DC-DC converter>

PROBABLE CAUSES

- The CAN bus is failed.
- The EV-ECU is failed.
- The on board charger is failed.

or

- The DC-DC converter is failed.

DIAGNOSIS PROCEDURE

STEP 1. M.U.T.-III CAN bus diagnosis

- Using M.U.T.-III, perform CAN bus line diagnosis.

Q: Is the check result normal?
YES : Go to Step 2.
NO : Repair CAN bus line (Refer to GROUP 54C – Troubleshooting – CAN Bus Diagnostics Table).

STEP 2. M.U.T.-III other diagnosis code.

Check if the diagnosis code No. P1C16 is set.

Q: Is diagnosis code set?
YES : Carry out troubleshooting for the diagnosis code No. P1C16.
NO : Go to Step 3.

STEP 3. M.U.T.-III other system diagnosis code.

Q: Is diagnosis code of EV-ECU system set?
YES : Check EV-ECU system.
NO : Go to Step 4.

STEP 4. M.U.T.-III other system diagnosis code.

Q: Is diagnosis code No. U1100 is set to other ECU?
YES : Replace the EV-ECU.
NO : Go to Step 5.

STEP 5. Diagnosis code recheck

Check again if the diagnosis code is set to the on board charger.
(1) Erase the stored diagnosis code.
(2) Perform the regular charge.
(3) Check if the diagnosis code is set.

Q: Is the diagnosis code set?
YES : Replace the on board charger/DC-DC converter.
NO : Intermittent malfunction (Refer to GROUP 00 – How to Use Troubleshooting/ Inspection Service Points – How to Cope with Intermittent Malfunctions).