MITSUBISHI MOTORS

SERVICE BULLETIN

GLOBAL AFTER SALES OFFICE, MITSUBISHI MOTORS CORPORATION

PURPOSE : CHANGE	ISSUE NO. : MSB-13EXML54-004	DATE : 2013-10-24
SUBJECT : QUICK CHARGING SYSTEM		<Affected Destination/Model> (As per attached) <M/Y> 11-14
GROUP : POWER UNIT/TRACTION BATTERY(Gr:54D)		i-MiEV(HA3W)

1. Description :

Please refer to the attached document for the information about the change of mention in the applicable service manual. (Setting of the troubleshooting when a quick charging gun can not be removed)

2. Affected service manuals :

Please refer to the attached document (Attached sheet 1)

3. About the details :

Please refer to the attached document (Attached sheet 6-9)

別紙 1

Attached sheet 1

〈For overseas market〉

〈EU/MMAL/NZ〉 **※EU spec vehicle is applicable for MMAL/NZ**

Applicable manual	Pub. No.	Applicable title (INFO ID)	Content
2011 i-MiEV Workshop Manual	ENG: CHAE11E1-CD FRE: CHAF11E1-CD GER: CHAG11E1-CD SPA: CHAS11E1-CD ITA: CHAI11E1-CD	SYMPTOM CHART (M549-22-250-01600-01)	Attached sheet 6
		SYMPTOM CHART (M549-22-250-04900-01)	Attached sheet 7
2012 i-MiEV Workshop Manual	ENG: CHAE12E1-CD FRE: CHAF12E1-CD GER: CHAG12E1-CD SPA: CHAS12E1-CD ITA: CHAI12E1-CD	SYMPTOM CHART (M549-22-250-01600-01)	Attached sheet 6
		SYMPTOM CHART (M549-22-250-05000-01)	Attached sheet 7
2013 i-MiEV Workshop Manual	ENG: CHAE13E1-CD FRE: CHAF13E1-CD GER: CHAG13E1-CD SPA: CHAS13E1-CD ITA: CHAI13E1-CD MMAL:AU900303 NZ:DRAFT	SYMPTOM CHART (M549-22-250-01600-01)	Attached sheet 6
		SYMPTOM CHART (M549-22-250-05000-01)	Attached sheet 7
2014 i-MiEV Workshop Manual	ENG: CHAE14E1-CD FRE: CHAF14E1-CD GER: CHAG14E1-CD SPA: CHAS14E1-CD ITA: CHAI14E1-CD MMAL:AU900411 NZ:DRAFT	SYMPTOM CHART (M549-22-250-01600-01)	Attached sheet 6
		SYMPTOM CHART (M549-22-250-05000-01)	Attached sheet 7

〈MMSA〉

Applicable manual	Pub. No.	Applicable title (INFO ID)	Content
2012 i-MiEV Service Manual CD-ROM	MSCD-018B-2012	SYMPTOM CHART (M549-22-250-01600-01)	Attached sheet 8
		SYMPTOM CHART (M549-22-250-05000-01)	Attached sheet 9
2013 i-MiEV Service Manual CD-ROM	MSCD-318B-2013M	SYMPTOM CHART (M549-22-250-07200-01)	Attached sheet 8
		SYMPTOM CHART (M549-22-250-08300-01)	Attached sheet 9

Attached sheet 6

Code No. U1921: K-line error (BMU)

⚠ CAUTION
If there is any problem in the CAN bus lines, an incorrect diagnosis code may be set. Prior to this diagnosis, always diagnose the CAN bus lines.

OPERATION

- BMU communicates with EV-ECU via CAN.

DIAGNOSIS CODE SET CONDITIONS

- When the diagnosis code No. U1922 is set to the BMU, the diagnosis code No. U1921 will be set.

PROBABLE CAUSES

- Malfunction of the BMU system

DIAGNOSIS PROCEDURE

STEP 1. M.U.T.-III CAN bus diagnosis
Use the M.U.T.-III to diagnose the CAN bus lines.

Q: Is the check result normal?
YES : Go to Step 3.
NO : Repair the CAN bus line. (Refer to GROUP 54C – Troubleshooting .) Then go to Step 2.

STEP 2. Diagnosis code recheck after resetting CAN bus lines
Check again if the diagnosis code No. U1921 is set to the EV-ECU.
(1) Erase the stored diagnosis code.
(2) Set the electric motor switch from the LOCK (OFF) position to the ON position.
(3) Check if the diagnosis code is set.

Q: Is the diagnosis code set?
YES : Go to Step 3.
NO : This diagnosis is complete.

STEP 3. Use M.U.T.-III to confirm a diagnosis code of other systems.
Check if the diagnosis code No. U1922 is set to the BMU.

Q: Is the diagnosis code set?
YES : Carry out troubleshooting for the diagnosis code No. U1922. (Refer to .) Then go to Step 4.
NO : Go to Step 4.

STEP 4. Diagnosis code recheck
Check again if the diagnosis code is set to the EV-ECU.
(1) Erase the stored diagnosis code.
(2) Set the electric motor switch from the LOCK (OFF) position to the ON position.
(3) Check if the diagnosis code is set.

Q: Is the diagnosis code set?
YES : Return to Step 1.
NO : The diagnosis is complete.

TROUBLE SYMPTOM CHART

M1549222500016

Check item	Inspection procedure	Reference page
EV-ECU power supply system	1	
The combination meter does not illuminate even if the electric motor switch is turned ON.	2	
The ready indicator does not illuminate even if the electric motor switch is turned to the START position.	3	
The cruising range shortened.	4	
Bad mileage	5	

<Added>

Check item	Inspection procedure	Reference page
Non-removal quick charging gun	Refer to quick charging system	

Attached sheet 7(1/3)

<Old>

QUICK CHARGING SYSTEM

TROUBLE SYMPTOM CHART

M1549222500049

Trouble symptom	COMMENTS ON TROUBLE SYMPTOM
No charging starts until the charging rate becomes 80%.	The protection control is activated by charging at a low temperature.

ON-VEHICLE SERVICE

<New>

From attached sheet 7(2/3)-(3/3)

QUICK CHARGING RELAY CHECK

M1549224000028

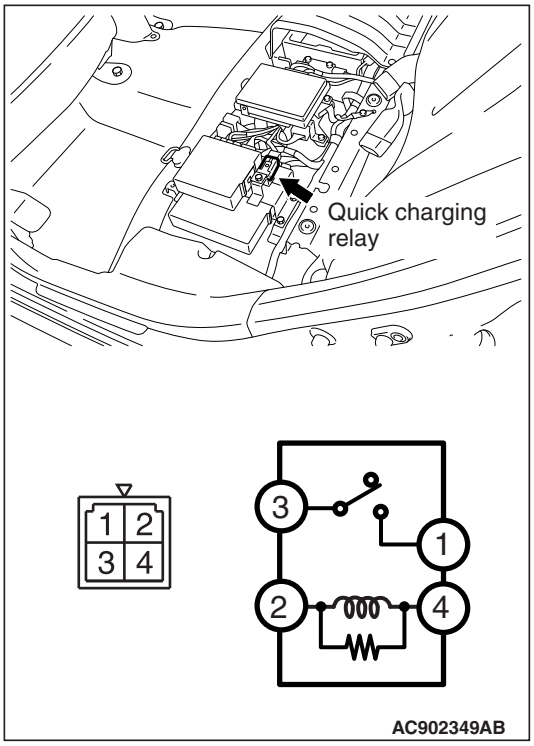

Battery voltage	Terminal number	Normal conditions
No current supply	1 – 3	No continuity
Energised [terminal 2 (+), terminal 4 (–)]		Continuity exists (2 Ω or less).

Attached sheet 7(2/3)

<New>

QUICK CHARGING SYSTEM

INSPECTION CHART FOR TROUBLE SYMPTOMS

M1549222500050

Trouble symptom	Comments on trouble symptom
No charging starts until the charging rate becomes 80%.	The protection control is activated by charging at a low temperature.

TROUBLE SYMPTOM CHART

Inspection procedure	Check item	Reference page
1	Non-removal quick charging gun	

DIAGNOSIS CODE PROCEDURES

Inspection Procedure 1: Non-removal quick charging gun

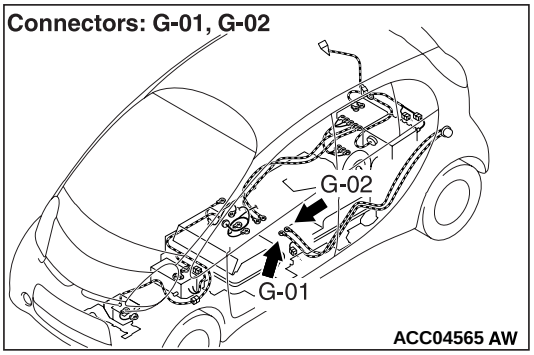

COMMENTS ON TROUBLE SYMPTOM

- The cause is assumed to be malfunction of quick charger (Ask the quick charger supplier to cjheck the defective quick charger).
- The cause is assumed to be stuck ON of quick charging contactor (+), (–) in the traction battery.

PROBABLE CAUSES

- Malfunction of quick charger
- Damaged wiring harness or connector(s)
- Malfunction of the quick charging contactor (+), (–) in the traction battery
- Malfunction of the quick charging relay
- Malfunction of the EV-ECU

DIAGNOSIS PROCEDURE

STEP 1. Check whether the diagnosis code is set.

Check if the diagnosis code is set to the EV-ECU.

Q: Is the diagnosis code set?

YES : Carry out troubleshooting for the EV-ECU (Refer to).
NO : Go to Step 2.

STEP 2. Voltage measurement at G-01 EV charger cable (quick charging) connector, service plug

⚠ ***DANGER***

- ***Check the high-voltage circuit while reading carefully the precautions on handling a high-voltage vehicle (Refer to).***
- ***Be sure to wear the specified protective equipment when pulling the service plug (Refer to).***

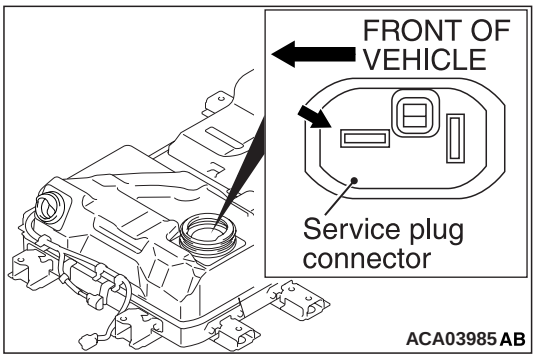

Using a high voltage multimeter, measure the high voltage between the G-01 EV charger cable (quick charging) connection terminal and service plug forward terminal.

OK: Approximately 0 V

Q: Is the check result normal?

YES : Go to Step 3.
NO : Go to Step 4.

STEP 3. Voltage measurement at G-02 EV charger cable (quick charging) connector, service plug connector

⚠ DANGER

- ***Check the high-voltage circuit while reading carefully the precautions on handling a high-voltage vehicle (Refer to).***
- ***Be sure to wear the specified protective equipment when pulling the service plug (Refer to).***

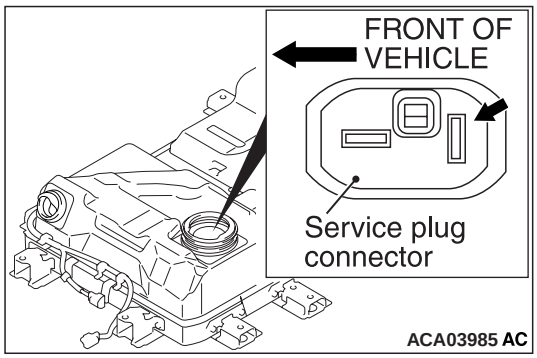

Using a high voltage multimeter, measure the high voltage between the G-02 EV charger cable (quick charging) connection terminal and service plug connection backward terminal.

OK: Approximately 0 V

Q: Is the check result normal?
YES : Go to Step 5.
NO : Go to Step 4.

STEP 4. Check the quick charge contactor (+) or (–)

(1) Removal the quick charge contactor (+) or (–) in traction battery.
(2) Check the quick charge contactor (+) or (–) in traction battery.

Q: Is the check result normal?
YES : Go to Step 5.
NO : Replace the quick charge contactor (+) or (–) in traction battery.

STEP 5. Check the trouble symptom.

Q: Is the check result normal?
YES : Intermittent malfunction (Refer to GROUP 00 – How to Use Troubleshooting/ Inspection Service Points – How to Cope with Intermittent Malfunction .).
NO : Ask the quick charger supplier to check the defective quick charger.

STEP 4. Check whether the DTC is reset.
Recheck if the DTC is set .
(1) Erase the DTC.
(2) Turn the electric motor switch from "LOCK"(OFF) position to "ON" position.
(3) Check if the DTC is set.

Q: Is the DTC U1921 set?

YES : Return to Step 1.
NO : The diagnosis is complete.

TROUBLE SYMPTOM CHART

M1549222500016

Trouble symptoms	Inspection procedure number	Reference page
EV-ECU power supply system	1	
The combination meter does not illuminate even if the electric motor switch is turned ON.	2	
The ready indicator does not illuminate even if the electric motor switch is turned to the START position.	3	
The cruising range shortened.	4	
Bad mileage	5	

<Added>

Check item	Inspection procedure	Reference page
Non-removal quick charging gun	Refer to quick charging system	

Attached sheet 9(1/4)

<Old>

QUICK CHARGING SYSTEM

TROUBLE SYMPTOM CHART

M1549222500050

Trouble symptom	Comments on trouble symptom
No charging starts until the charging rate becomes 80%.	The protection control is activated by charging at a low temperature.

⚠ *DANGER*

Do not disassemble any parts not described in this manual.

ON-VEHICLE SERVICE

QUICK CHARGING RELAY CONTINUITY CHECK

M1549224000039

Battery voltage	Terminal No. to be connected to tester	Continuity test result
Not applied	3 – 1	Open circuit
Connect terminal No.2 and battery (+) terminal. Connect terminal No.4 and battery (–) terminal.		Continuity (Less than 2 ohms)

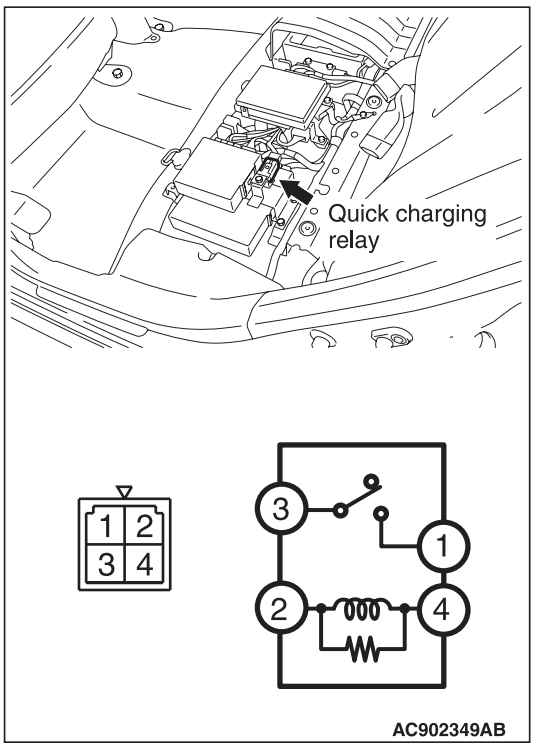

<New>

From attached sheet 9(2/4)-(4/4)

Attached sheet 9(2/4)

<New>

QUICK CHARGING SYSTEM

INSPECTION CHART FOR TROUBLE SYMPTOMS

M1549222500083

Trouble symptom	Comments on trouble symptom
No charging starts until the charging rate becomes 80%.	The protection control is activated by charging at a low temperature.

TROUBLE SYMPTOM CHART

Inspection procedure	Check item	Reference page
1	Non-removal quick charging gun	

DIAGNOSTIC TROUBLE CODE PROCEDURES

Inspection Procedure 1: Non-removal quick charging gun

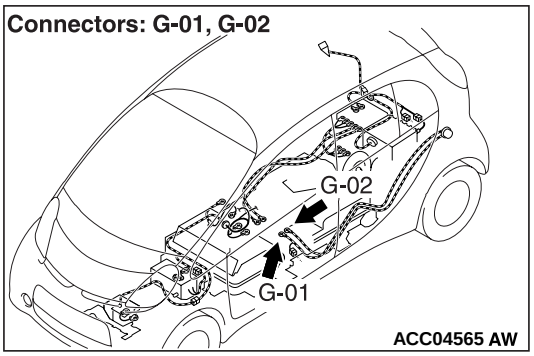

COMMENTS ON TROUBLE SYMPTOM

- The cause is assumed to be malfunction of quick charger (Ask the quick charger supplier to check the defective quick charger).
- The cause is assumed to be stuck ON of quick charging contactor (+), (–) in the Main Drive Lithium-ion Battery.

PROBABLE CAUSES

- Malfunction of quick charger
- Damaged wiring harness or connector(s)
- Malfunction of the quick charging contactor (+), (–) in the Main Drive Lithium-ion Battery
- Malfunction of the quick charging relay
- Malfunction of the EV-ECU

DIAGNOSIS

STEP 1. Check whether the DTC is set.
Check if the DTC is set to the EV-ECU.

Q: Is the DTC set?

YES : Carry out troubleshooting for the EV-ECU (Refer to).
NO : Go to Step 2.

STEP 2. Voltage measurement at G-01 EV charger cable (quick charging) connector, service plug

⚠ ***DANGER***

- ***Check the high-voltage circuit while reading carefully the precautions on handling a high-voltage vehicle (Refer to).***
- ***Be sure to wear the specified protective equipment when pulling the service plug (Refer to).***

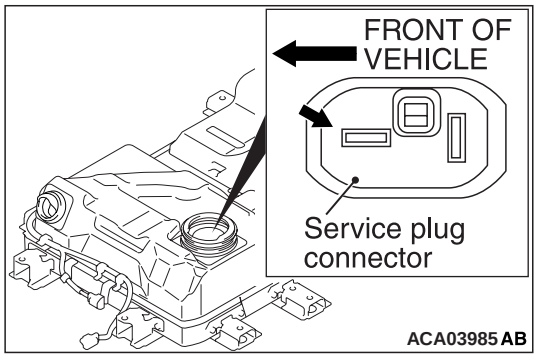

Using a high voltage multimeter, measure the high voltage between the G-01 EV charger cable (quick charging) connection terminal and service plug forward terminal.

OK: Approximately 0 V

Q: Is the check result normal?

YES : Go to Step 3.
NO : Go to Step 4.

STEP 3. Voltage measurement at G-02 EV charger cable (quick charging) connector, service plug connector

⚠ ***DANGER***

- ***Check the high-voltage circuit while reading carefully the precautions on handling a high-voltage vehicle (Refer to).***
- ***Be sure to wear the specified protective equipment when pulling the service plug (Refer to).***

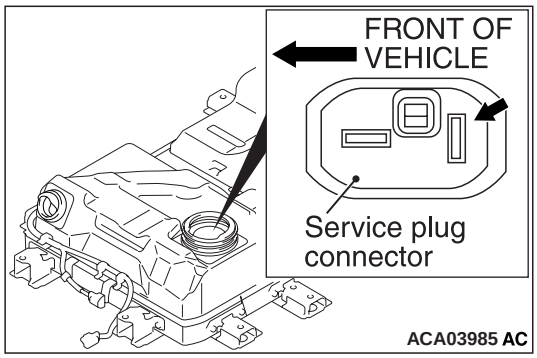

Using a high voltage multimeter, measure the high voltage between the G-02 EV charger cable (quick charging) connection terminal and service plug connection backward terminal.

OK: Approximately 0 V

Q: Is the check result normal?

YES : Go to Step 5.
NO : Go to Step 4.

STEP 4. Check the quick charge contactor (+) or (–)

(1) Removal the quick charge contactor (+) or (–) in the Main Drive Lithium-ion Battery.
(2) Check the quick charge contactor (+) or (–) in the Main Drive Lithium-ion Battery.

Q: Is the check result normal?

YES : Go to Step 5.
NO : Replace the quick charge contactor (+) or (–) in the Main Drive Lithium-ion Battery.

Attached sheet 9(4/4)

<New>

STEP 5. Check the trouble symptom.

Q: Is the check result normal?

YES : Intermittent malfunction (Refer to GROUP 00 – How to Use Troubleshooting/Inspection Service Points – How to Cope with Intermittent Malfunction .).

NO : Ask the quick charger supplier to check the defective quick charger.