SERVICE BULLETIN

GLOBAL AFTER SALES OFFICE, MITSUBISHI MOTORS CORPORATION

PURPOSE : INFORMATION	ISSUE NO. : MSB-13EXML55-001A	DATE : 2013-02-14
SUBJECT : REMOVAL & INSTALLATION OF A/C CONTROL UNIT		<Destination/Model> (As per attached) / <M/Y> 11-13
GROUP : HEATER & AIR CONDITIONER		i-MiEV(HA3W)

1. Description:

See the attached document for the information about the change of mention in the applicable service manual.

2. Applicable manual:

See the attached document (ATTACHED SHEET 6)

3. Details:

See the attached document

※Related EO number : PW2861

<Correct>

Destination	Applicable manual	Pub. No..	Applicable title (INFO ID)	Content
MMNA	2012 i-MiEV SERVICE MANUAL	MSCD-018B-2012	A/C CONTROL UNIT REMOVAL AND INSTALLATION (M550-10-330-01000-01)	Attached Sheet 4
	2013 i-MiEV SERVICE MANUAL	MSCD-018B-2013		
EU G.EXP, Malaysia MMAL/NZ	2011 i-MiEV Workshop Manual	CHAE11E1-CD (English) CHAS11E1-CD (Spanish) CHAF11E1-CD (French) CHAG11E1-CD (German) CHAI11E1-CD (Italian) MALAYSIA/MMAL/NZ: DRAFT	A/C CONTROL UNIT REMOVAL AND INSTALLATION (M550-10-330-01000-01)	Attached Sheet 5
	2012 i-MiEV Workshop Manual	CHAE12E1-CD (English) CHAS12E1-CD (Spanish) CHAF12E1-CD (French) CHAG12E1-CD (German) CHAI12E1-CD (Italian) MALAYSIA/MMAL/NZ: DRAFT		
	2013 i-MiEV Workshop Manual	CHAE13E1-CD (English) CHAS13E1-CD (Spanish) CHAF13E1-CD (French) CHAG13E1-CD (German) CHAI13E1-CD (Italian) MMAL:AU900303 MALAYSIA/NZ:DRAFT		

A/C CONTROL UNIT

REMOVAL AND INSTALLATION

M1550103300010

Pre-removal and post-installation operation
- Rear floor cover panel removal and installation (Refer to GROUP 42 – Loose Panel .)

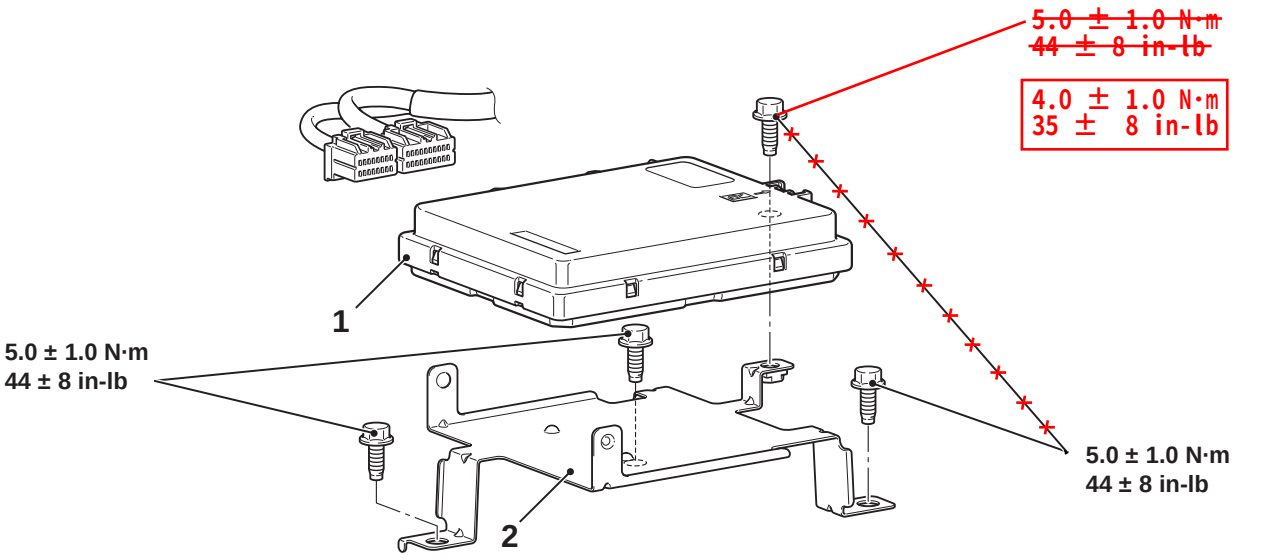

AC900916AC

Removal steps
1. A/C control unit
2. A/C control equip bracket

A/C CONTROL UNIT

REMOVAL AND INSTALLATION

M1550103300010

Pre-removal and post-installation operation
- Rear floor cover panel removal and installation (Refer to GROUP 42 – Loose Panel .)

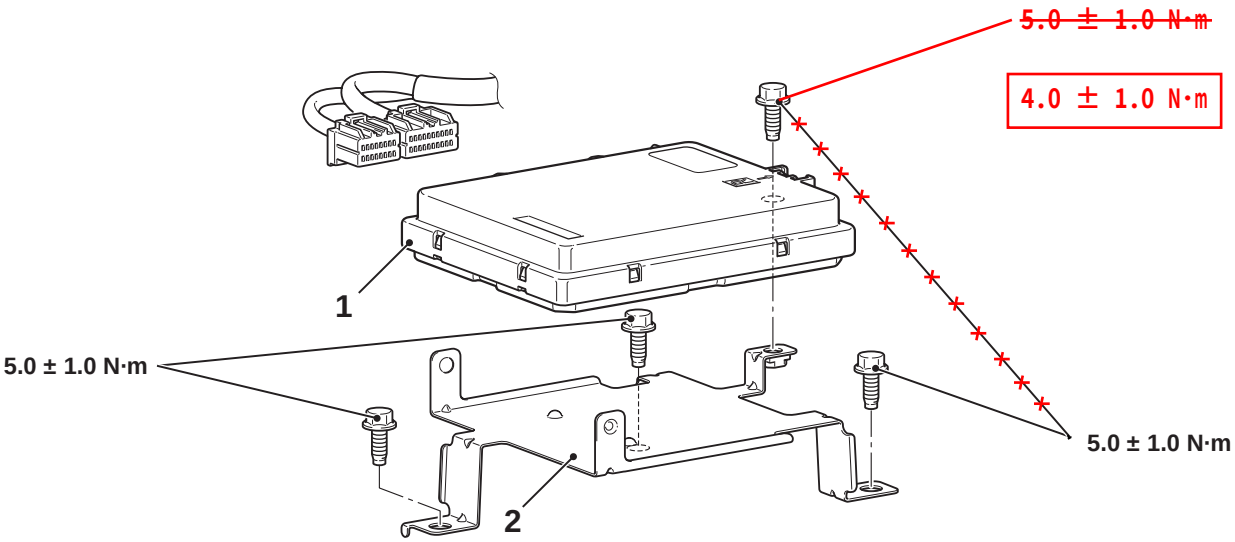

AC900916AC

Removal steps
1. A/C control unit
2. A/C control equip bracket