SERVICE BULLETIN

MITSUBISHI MOTORS

GLOBAL AFTER SALES OFFICE, MITSUBISHI MOTORS CORPORATION

PURPOSE : CORRECTION	ISSUE NO. : MSB-13EXPC22-501	DATE : 2013-05-15
SUBJECT : 6M/T(F/W6MBA) OVERHAUL		<Destination/Model> (EUR/PEUGEOT/CITROEN/ G.EXP) <M/Y> 08-13
GROUP : TRANSMISSION(Gr.22)		AS PER ATTACHED

1. Description :

See the attached document for the correction of the error existing in the applicable service manual. (Disassembly and reassembly of the output shaft No.1)

2. Applicable service manual :

See the attached document

3. Details :

See the attached document

【EU】

<LANCER (GS41)>

Manual	No.	Applicable title (Info-ID)	Contents
2008 LANCER Workshop Manual	CG1E08E2-CD(ENG) CG1F08E2-CD(FRE) CG1G08E2-CD(GER) CG1S08E2-CD(SPA)	OUTPUT SHAFT NO.1 DISASSEMBLY AND REASSEMBLY (M222-00-220-57600-01)	Attached sheet 2, 5
2009 LANCER Workshop Manual	CG1E09E1-CD(ENG) CG1F09E1-CD(FRE) CG1G09E1-CD(GER) CG1S09E1-CD(SPA)		
2010 LANCER Workshop Manual	CG1E10E1-CD(ENG) CG1F10E1-CD(FRE) CG1G10E1-CD(GER) CG1S10E1-CD(SPA)		

<LANCER SPORTBACK (GS44S)>

Manual	No.	Applicable title (Info-ID)	Contents
2009 LANCER SPORTBACK Workshop Manual	CG4E09E1-CD(ENG) CG4F09E1-CD(FRE) CG4G09E1-CD(GER) CG4S09E1-CD(SPA) CG4I09E1-CD(ITA)	OUTPUT SHAFT NO.1 DISASSEMBLY AND REASSEMBLY (M222-00-220-57600-01)	Attached sheet 2, 5
2010 LANCER SPORTBACK Workshop Manual	CG4E10E1-CD(ENG) CG4F10E1-CD(FRE) CG4G10E1-CD(GER) CG4S10E1-CD(SPA) CG4I10E1-CD(ITA)		

<LANCER (GS41)/LANCER SPORTBACK (GS44S)>

Manual	No.	Applicable title (Info-ID)	Contents
2011 LANCER/ LANCER SPORTBACK Workshop Manual	CG1E11E1-CD(ENG) CG1F11E1-CD(FRE) CG1G11E1-CD(GER) CG1S11E1-CD(SPA) CG1I11E1-CD(ITA)	OUTPUT SHAFT NO.1 DISASSEMBLY AND REASSEMBLY (M222-00-220-57601-01)	Attached sheet 2, 5
2012 LANCER/ LANCER SPORTBACK Workshop Manual	CG1E12E1-CD(ENG) CG1F12E1-CD(FRE) CG1G12E1-CD(GER) CG1S12E1-CD(SPA) CG1I12E1-CD(ITA)		
2013 LANCER/ LANCER SPORTBACK Workshop Manual	CG1E13E1-CD(ENG) CG1F13E1-CD(FRE) CG1G13E1-CD(GER) CG1S13E1-CD(SPA) CG1I13E1-CD(ITA)		

<PEUGEOT 4007/CITROEN C-CROSSER (GS45X-OEM)>

Manual	No.	Applicable title (Info-ID)	Contents
2008 4007/C-CROSSER Workshop Manual	N/A	OUTPUT SHAFT NO.1 DISASSEMBLY AND REASSEMBLY (M222-01-520-06000-01)	Attached sheet 3, 5
2009 4007/C-CROSSER Workshop Manual	N/A		
2010 4007/C-CROSSER Workshop Manual	N/A		

<OUTLANDER (GS45X)>

Manual	No.	Applicable title (Info-ID)	Contents
2011 OUTLANDER Workshop Manual	CGXE11E1-CD(ENG) CGXF11E1-CD(FRE) CGXG11E1-CD(GER) CGXS11E1-CD(SPA)	OUTPUT SHAFT NO.1 DISASSEMBLY AND REASSEMBLY (M222-01-520-07100-01)	Attached sheet 4, 5
2012 OUTLANDER Workshop Manual	CGXE12E1-CD(ENG) CGXF12E1-CD(FRE) CGXG12E1-CD(GER) CGXS12E1-CD(SPA)		

<ASX (ZC)>

Manual	No.	Applicable title (Info-ID)	Contents
2011 ASX Workshop Manual	CGWE11E2-CD(ENG) CGWF11E2-CD(FRE) CGWG11E2-CD(GER) CGWS11E2-CD(SPA) CGWI11E2-CD(ITA)	OUTPUT SHAFT NO.1 DISASSEMBLY AND REASSEMBLY (M222-01-520-07100-01)	Attached sheet 4, 5
2012 ASX Workshop Manual	CGWE12E1-CD(ENG) CGWF12E1-CD(FRE) CGWG12E1-CD(GER) CGWS12E1-CD(SPA) CGWI12E1-CD(ITA)		
2013 ASX Workshop Manual	CGWE13E1-CD(ENG) CGWF13E1-CD(FRE) CGWG13E1-CD(GER) CGWS13E1-CD(SPA) CGWI13E1-CD(ITA)		

<OUTLANDER (RE)>

Manual	No.	Applicable title (Info-ID)	Contents
2013 OUTLANDER Workshop Manual	CGFE13E1-CD(ENG) CGFF13E1-CD(FRE) CGFG13E1-CD(GER) CGFS13E1-CD(SPA) CGFI13E1-CD(ITA)	OUTPUT SHAFT NO.1 DISASSEMBLY AND REASSEMBLY (M222-01-520-07101-01)	Attached sheet 4, 5

【G.EXP】

<ASX/OUTLANDER SPORT (ZC)>

Manual	No.	Applicable title (Info-ID)	Contents
2011 ASX/OUTLANDER Workshop Manual	PWPE1006R(ENG) PWPS1007R(SPA)	OUTPUT SHAFT NO.1 DISASSEMBLY AND REASSEMBLY (M222-01-520-07100-01)	Attached sheet 4, 5

OUTPUT SHAFT

DISASSEMBLY AND REASSEMBLY

<Incorrect>

M1222002200576

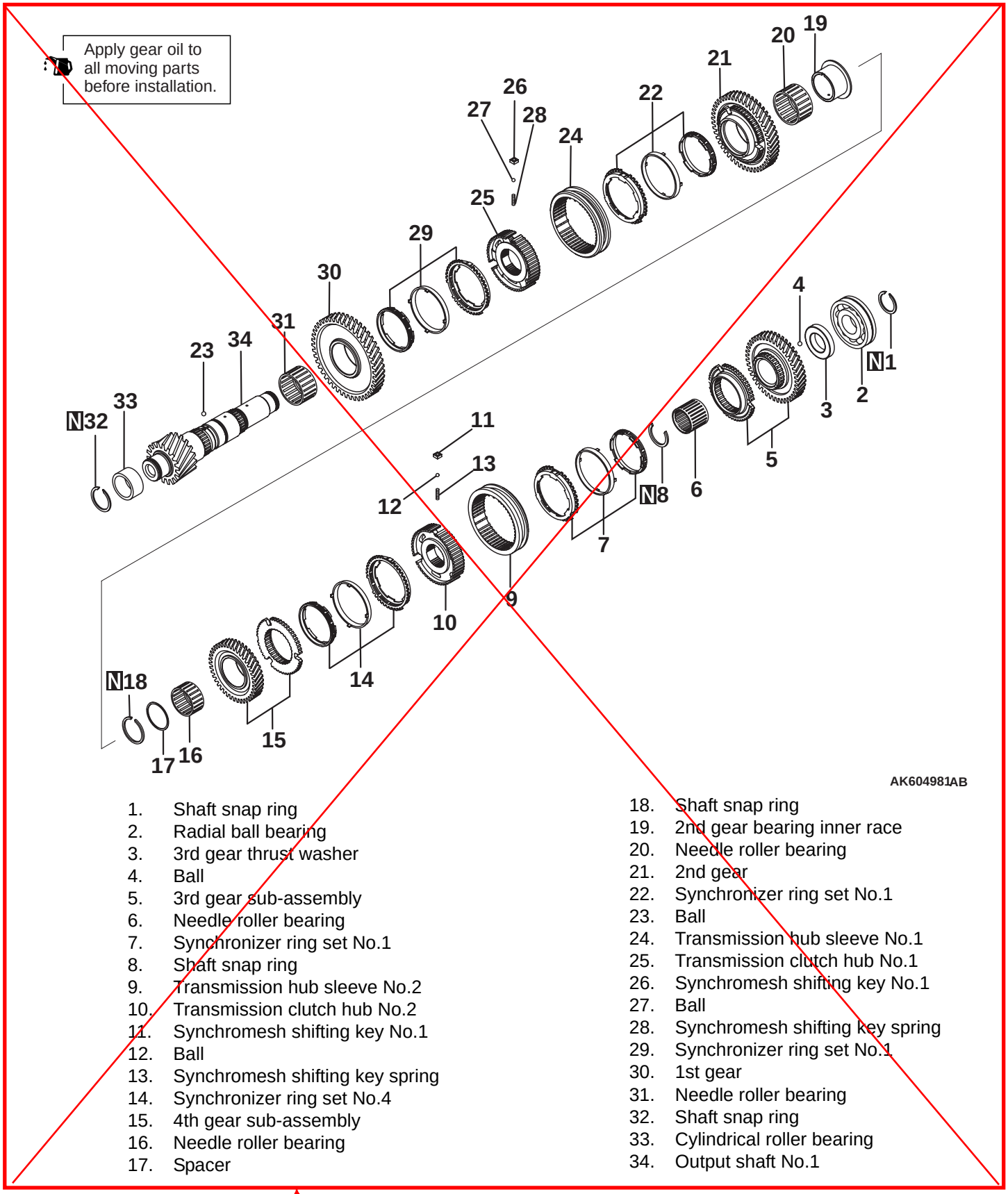

1. Shaft snap ring
2. Radial ball bearing
3. 3rd gear thrust washer
4. Ball
5. 3rd gear sub-assembly
6. Needle roller bearing
7. Synchronizer ring set No.1
8. Shaft snap ring
9. Transmission hub sleeve No.2
10. Transmission clutch hub No.2
11. Synchromesh shifting key No.1
12. Ball
13. Synchromesh shifting key spring
14. Synchronizer ring set No.4
15. 4th gear sub-assembly
16. Needle roller bearing
17. Spacer
18. Shaft snap ring
19. 2nd gear bearing inner race
20. Needle roller bearing
21. 2nd gear
22. Synchronizer ring set No.1
23. Ball
24. Transmission hub sleeve No.1
25. Transmission clutch hub No.1
26. Synchromesh shifting key No.1
27. Ball
28. Synchromesh shifting key spring
29. Synchronizer ring set No.1
30. 1st gear
31. Needle roller bearing
32. Shaft snap ring
33. Cylindrical roller bearing
34. Output shaft No.1

Attached sheet 5

DISASSEMBLY

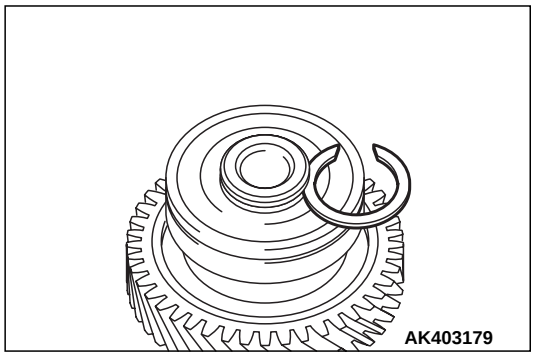

1. Remove the shaft snap ring.

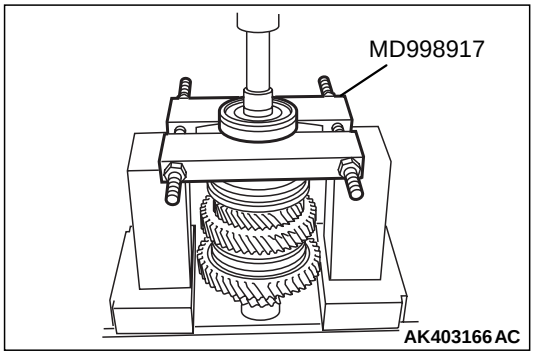

2. Using special tool Bearing remover (MD998917), support the radial ball bearing and remove the radial ball bearing.
3. Remove the 3rd gear thrust washer.
4. Remove the ball.

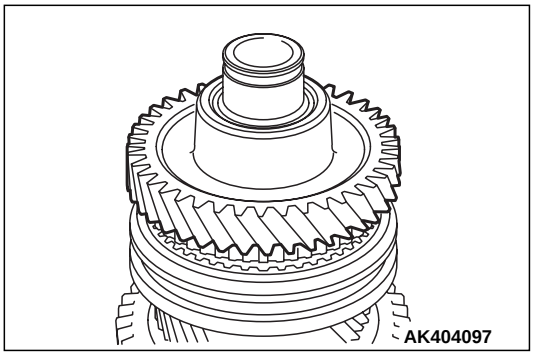

5. Remove the 3rd gear sub-assembly.

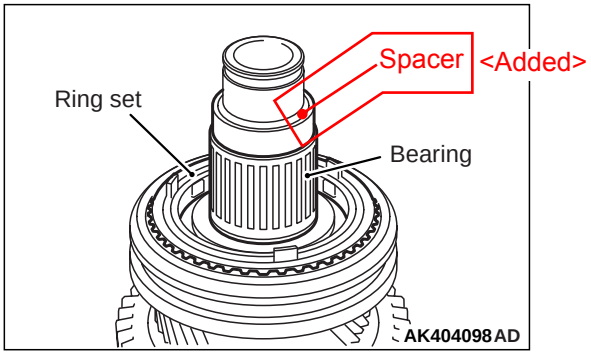

6. Remove the needle roller bearing and synchronizer ring set No.1.

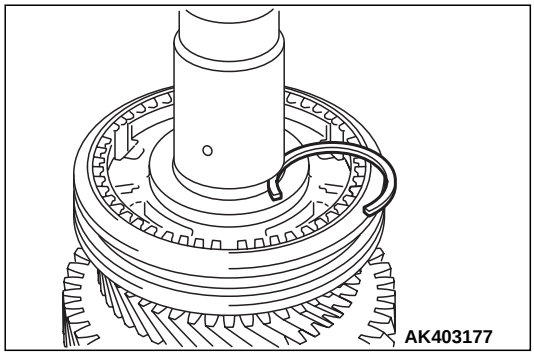

7. Remove the shaft snap ring.

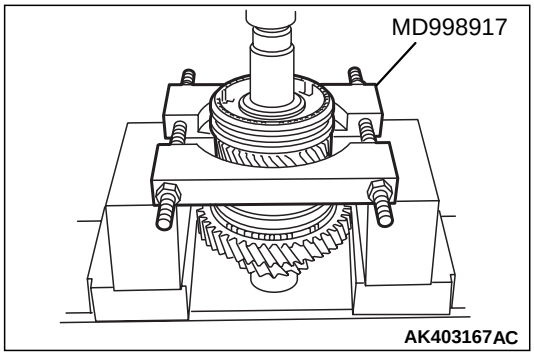

8. Using special tool Bearing remover (MD998917), support the 4th gear sub-assembly and remove the transmission hub sleeve No.2, ball, synchromesh shifting key spring, synchromesh shifting key No.1, transmission clutch hub No.2, synchronizer ring set No.4 and 4th gear sub-assembly.

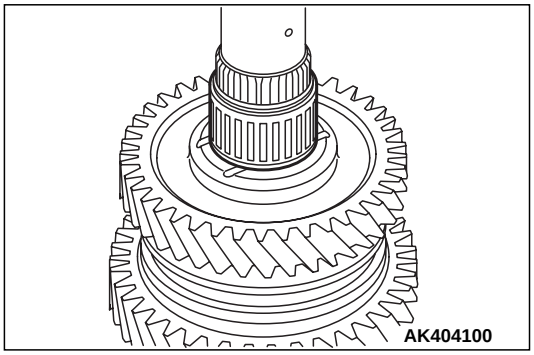

9. Remove the needle roller bearing.

<Added>

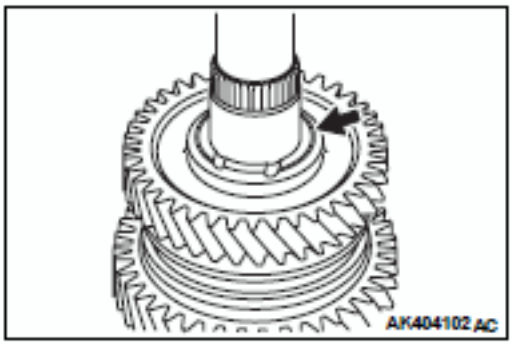

12.Insert the 2nd gear inner race to the output shaft No.1.

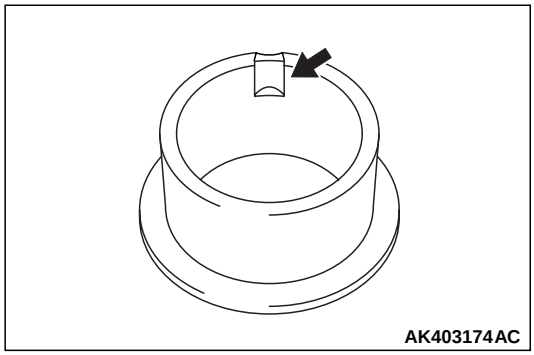

11.Fit the ball into groove as shown in the illustration.

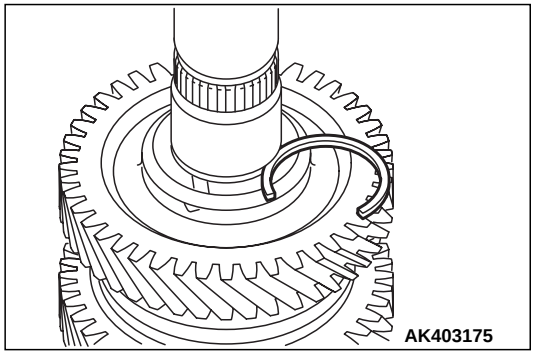

<Incorrect>

~~12~~.Select a shaft snap ring that allows distance of the thrust crevice of 2nd gear bearing inner race to fall within the standard value range.

Standard value: 0 – 0.1 mm

13
<Correct>

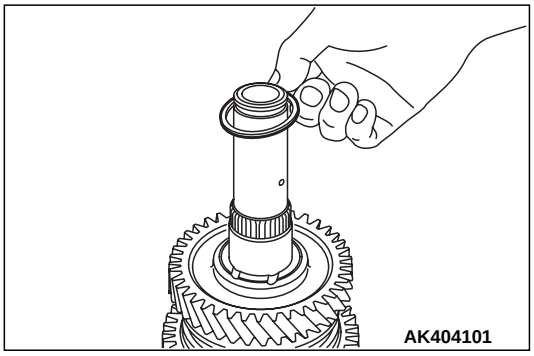

<Incorrect>

~~13~~.Insert the spacer to the output shaft No.1.

14
<Correct>

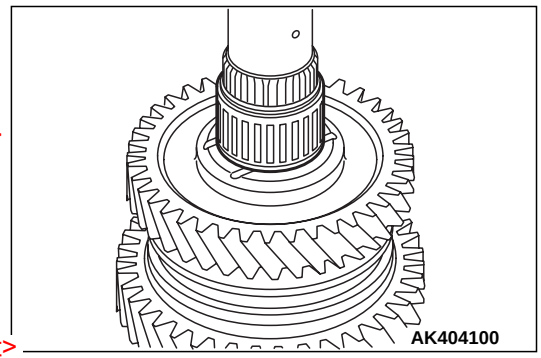

<Incorrect>

~~14~~.Insert the needle roller bearing to the output shaft No.1.

15
<Correct>

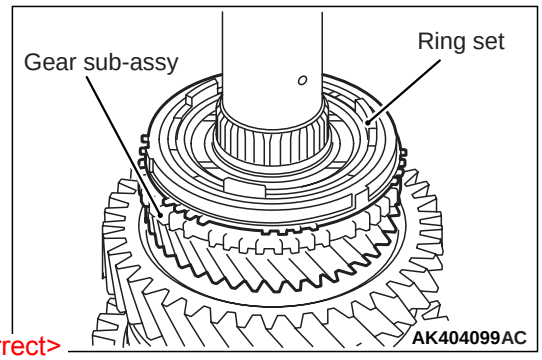

<Incorrect>

~~15~~.Insert the 4th gear sub-assembly and synchronizer ring set No.4 to the output shaft No.1.

16
<Correct>

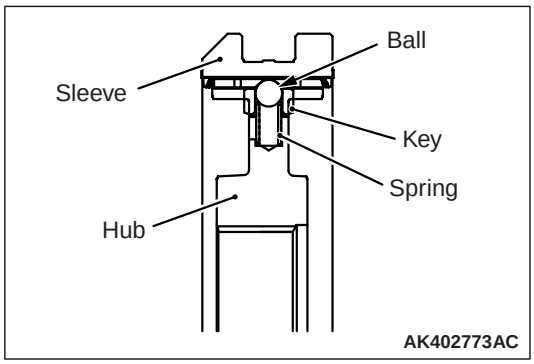

<Incorrect>

~~16~~.As shown in the illustration, set the transmission hub sleeve No.2, transmission clutch hub No.2, synchromesh shifting key No.1, synchromesh shifting key spring, ball.

NOTE:

- *Apply gear oil to the caulked area between the sleeve and the hub.*
- *After installation, confirm the sleeve and the hub slide smoothly.*

17
<Correct>

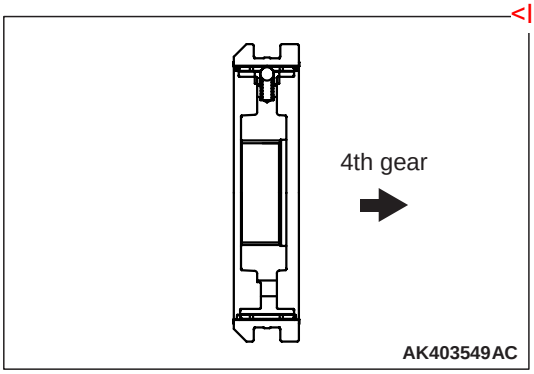

<Incorrect> 19. Select a shaft snap ring that allows distance of the thrust crevice of transmission clutch hub No.2 to fall within the standard value range.

Standard value: 0 – 0.1 mm

20 <Correct>

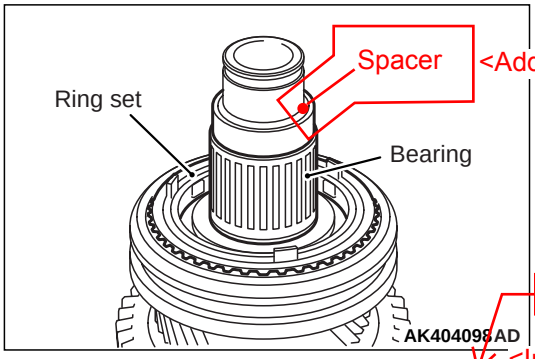

<Correct> 21

, <Correct>

<Incorrect>

<Incorrect> 20. Insert the synchronizer ring set No.1 and needle roller bearing to the transmission clutch hub No.2.

<Added> and spacer

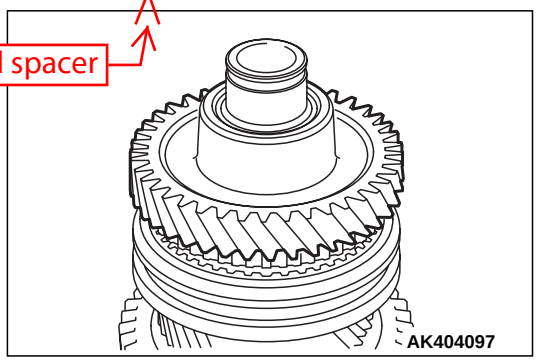

<Correct> 22

<Incorrect> 21. Insert the 3rd gear sub-assembly to the output shaft No.1.

23 <Correct>

<Incorrect> 22. Insert the ball.

<Incorrect> 23. Insert the 3rd gear thrust washer.

24 <Correct>

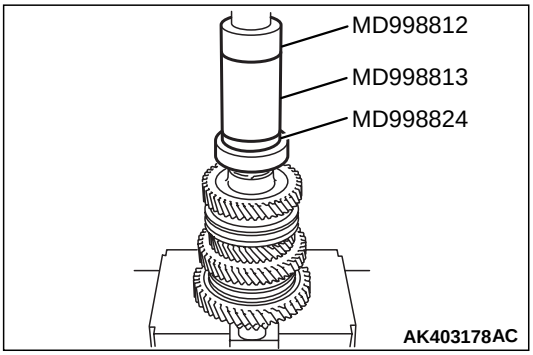

<Incorrect> 24. Using special tools, install the radial ball bearing.

- Installer cap (MD998812)
- Installer-100 (MD998813)
- Installer adapter (MD998824)

25 <Correct>

⚠ CAUTION

- **Pay attention to the direction of inserting the transmission hub sleeve No.2.**
- **During press fit, confirm correct positions of the hub and the synchronizer ring.**
- **Check for smooth rotation of the gear after the installation.**
- **he synchronizer ring must not bind.**

<Incorrect> 17. Set the transmission hub sleeve No.2, transmission clutch hub No.2 to the output shaft No.1 in the direction as shown in the illustration.

18 <Correct>

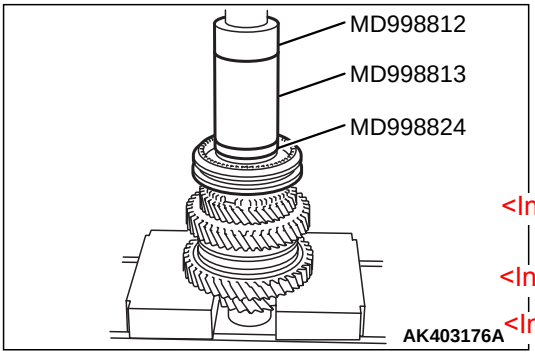

<Incorrect> 18. Using special tools, install the transmission clutch hub No.2.

- Installer cap (MD998812)
- Installer-100 (MD998813)
- Installer adapter (MD998824)

19 <Correct>

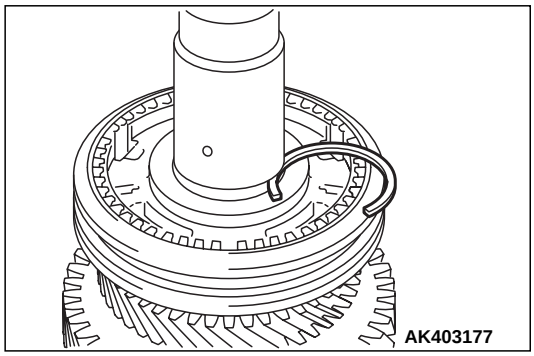

OUTPUT SHAFT NO.1

DISASSEMBLY AND REASSEMBLY

M1222015200060

<Incorrect>

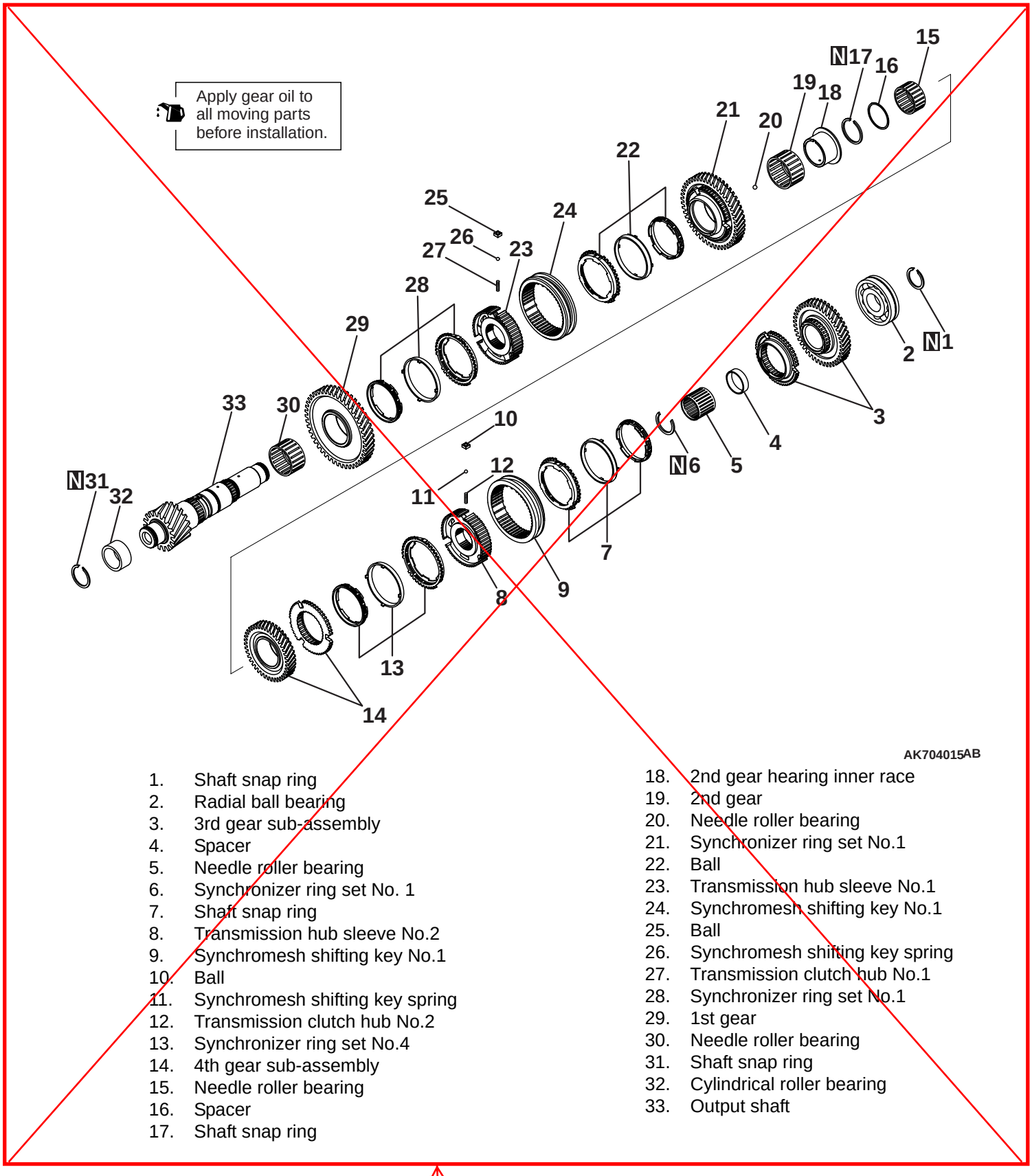

1. Shaft snap ring
2. Radial ball bearing
3. 3rd gear sub-assembly
4. Spacer
5. Needle roller bearing
6. Synchronizer ring set No. 1
7. Shaft snap ring
8. Transmission hub sleeve No.2
9. Synchromesh shifting key No.1
10. Ball
11. Synchromesh shifting key spring
12. Transmission clutch hub No.2
13. Synchronizer ring set No.4
14. 4th gear sub-assembly
15. Needle roller bearing
16. Spacer
17. Shaft snap ring
18. 2nd gear hearing inner race
19. 2nd gear
20. Needle roller bearing
21. Synchronizer ring set No.1
22. Ball
23. Transmission hub sleeve No.1
24. Synchromesh shifting key No.1
25. Ball
26. Synchromesh shifting key spring
27. Transmission clutch hub No.1
28. Synchronizer ring set No.1
29. 1st gear
30. Needle roller bearing
31. Shaft snap ring
32. Cylindrical roller bearing
33. Output shaft

Attached sheet 5

<Incorrect>

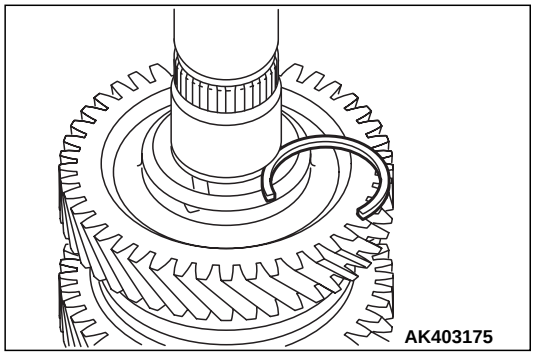

<Incorrect>

12. Select a shaft snap ring that allows distance of the thrust crevice of 2nd gear bearing inner race to fall within the standard value range.

Standard value: 0 – 0.1 mm

13 <Correct>

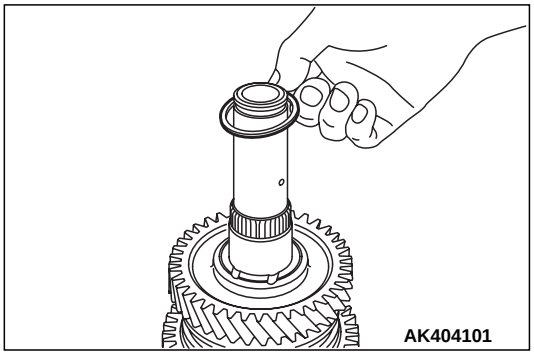

<Incorrect>

13. Insert the spacer to the output shaft No.1.

14 <Correct>

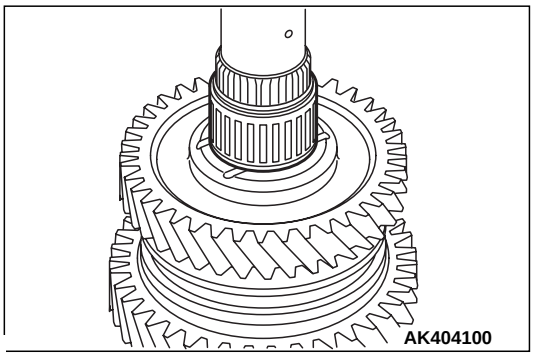

<Incorrect>

14. Insert the needle roller bearing to the output shaft No.1.

15 <Correct>

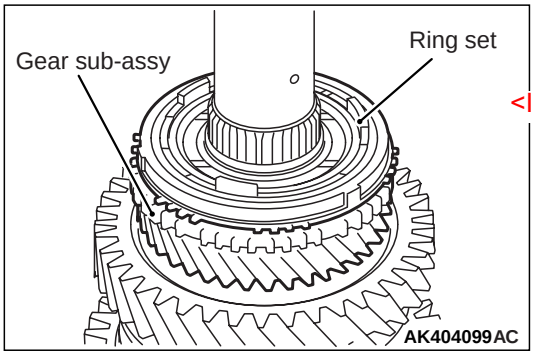

<Added>

12. Insert the 2nd gear inner race to the output shaft No.1.

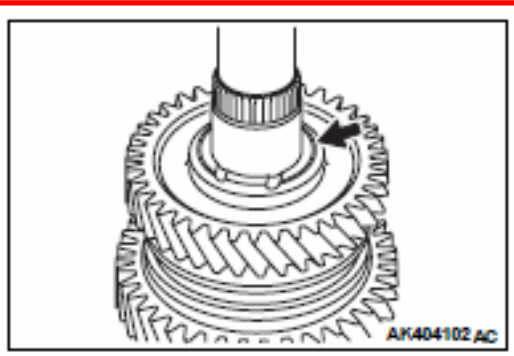

<Incorrect>

15. Insert the 4th gear sub-assembly and synchronizer ring set No.4 to the output shaft No.1.

16 <Correct>

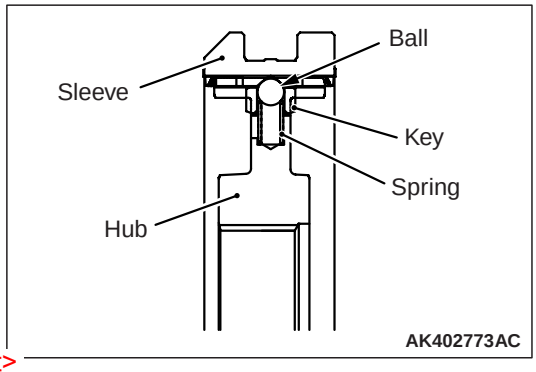

<Incorrect>

16. As shown in the illustration, set the transmission hub sleeve No.2, transmission clutch hub No.2, synchromesh shifting key No.1, synchromesh key spring, ball.

17 <Correct>

NOTE:

- *Apply gear oil to the caulked area between the sleeve and the hub.*
- *After installation, confirm the sleeve and the hub slide smoothly.*

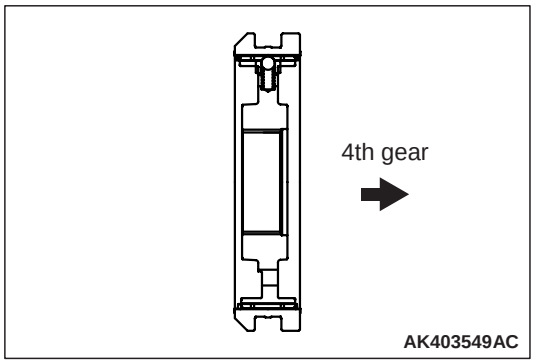

⚠ CAUTION

- **Pay attention to the direction of inserting the transmission hub sleeve.**
- **During press fit, confirm correct positions of the hub and the synchronizer ring.**
- **Check for smooth rotation of the gear after the installation.**
- **The synchronizer ring must not bind.**

<Correct> 18

<Incorrect>

17. Set the transmission hub sleeve No.2, transmission clutch hub No.2 to the output shaft

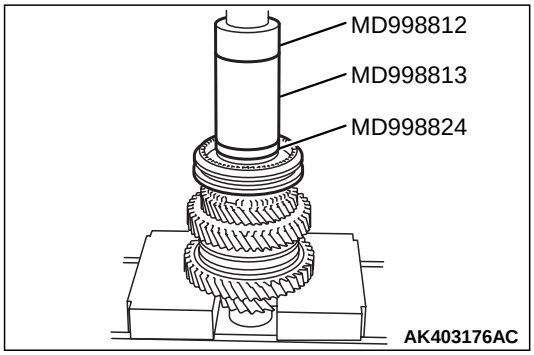

<Incorrect>

18. Using special tools, install the Transmission clutch hub No.2.
- Installer cap (MD998812)
- Installer-100 (MD998813)
- Installer adapter (MD998824)

19 <Correct>

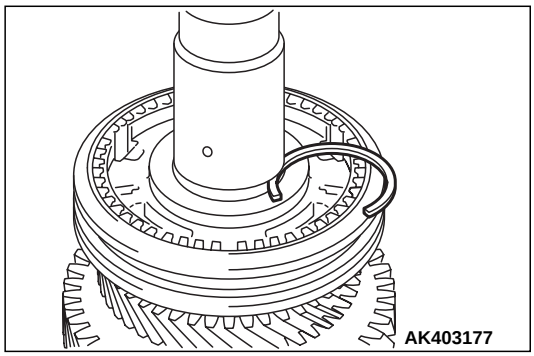

<Incorrect>

19. Select a shaft snap ring that allows distance of the thrust crevice of transmission clutch hub No. 2 to fall within the standard value range.

Standard value: 0 – 0.1 mm

20 <Correct>

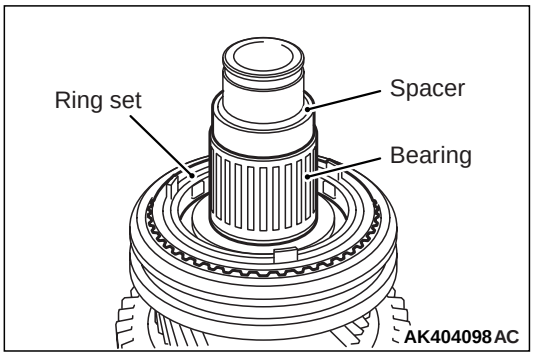

<Incorrect>

20. Insert the synchronizer ring set No.1, needle roller bearing and spacer to the transmission clutch hub No.2.

21 <Correct>

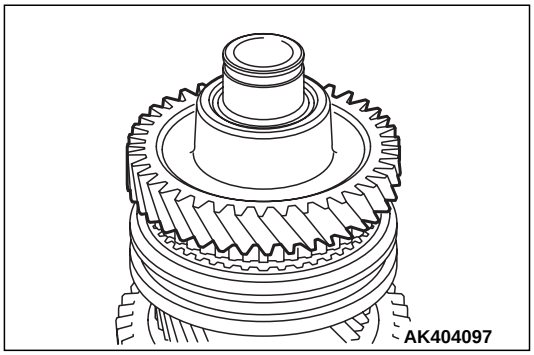

<Incorrect>

21. Insert the 3rd gear sub-assembly to the output shaft No.1.

22 <Correct>

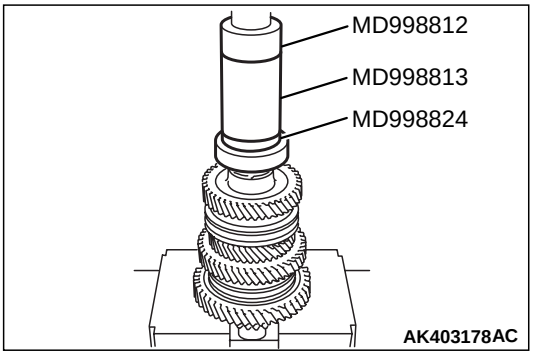

<Incorrect>

22. Using special tools, install the radial ball bearing.
- Installer cap (MD998812)
- Installer-100 (MD998813)
- Installer adapter (MD998824)

23 <Correct>

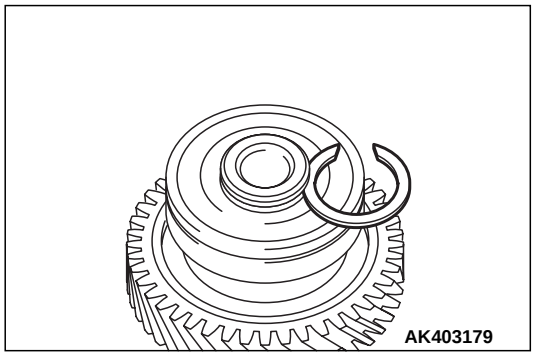

<Incorrect>

23. Select a shaft snap ring that allows distance of the thrust crevice of bearing to fall within the standard value range.

Standard value: 0 – 0.1 mm

24 <Correct>

OUTPUT SHAFT NO.1

DISASSEMBLY AND REASSEMBLY

M1222015200071

<Incorrect>

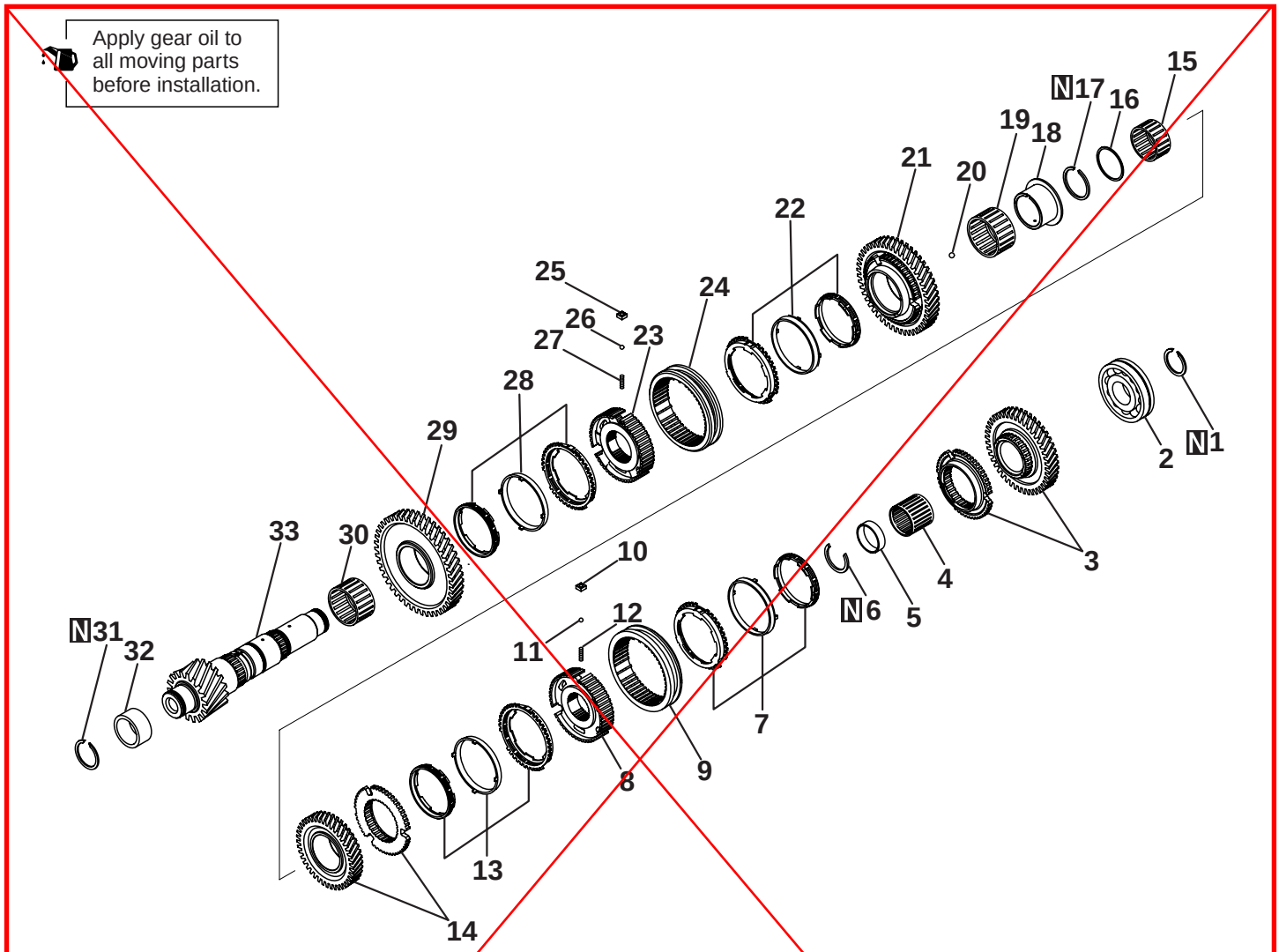

1. Shaft snap ring
2. Radial ball bearing
3. 3rd gear sub-assembly
4. Needle roller bearing
5. Spacer
6. Shaft snap ring
7. Synchronizer ring set No.1
8. Transmission clutch hub No.2
9. Transmission hub sleeve No.2
10. Synchromesh shifting key No.1
11. Ball
12. Synchromesh shifting key spring
13. Synchronizer ring set No.4
14. 4th gear sub-assembly
15. Needle roller bearing
16. Spacer
17. Shaft snap ring
18. 2nd gear bearing inner race
19. Needle roller bearing
20. Ball
21. 2nd gear
22. Synchronizer ring set No.1
23. Transmission clutch hub No.1
24. Transmission hub sleeve No.1
25. Synchromesh shifting key No.1
26. Ball
27. Synchromesh shifting key spring
28. Synchronizer ring set No.1
29. 1st gear
30. Needle roller bearing
31. Shaft snap ring
32. Cylindrical roller bearing
33. Output shaft No.1

Attached sheet 5

DISASSEMBLY

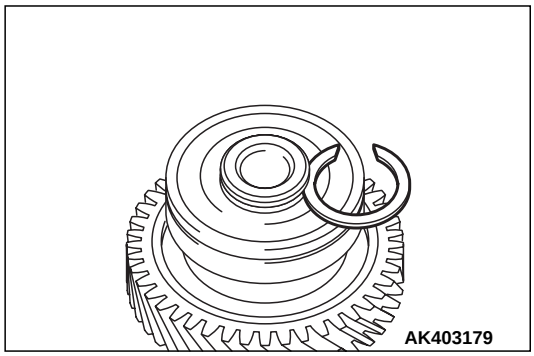

1. Remove the shaft snap ring.

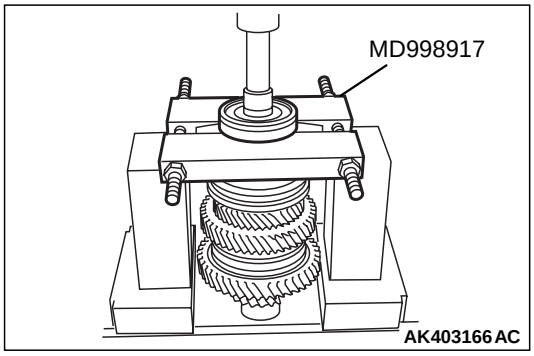

2. Using special tool Bearing remover (MD998917), support the radial ball bearing and remove the radial ball bearing.

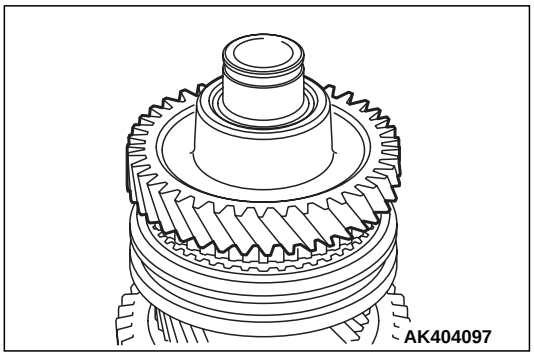

3. Remove the 3rd gear sub-assembly.

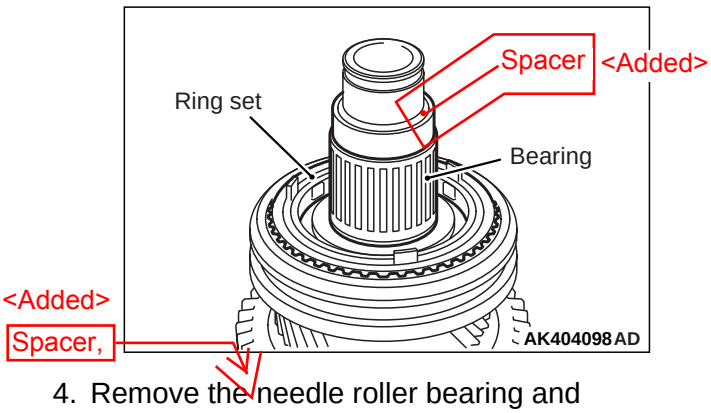

4. Remove the needle roller bearing and synchronizer ring set No.1.

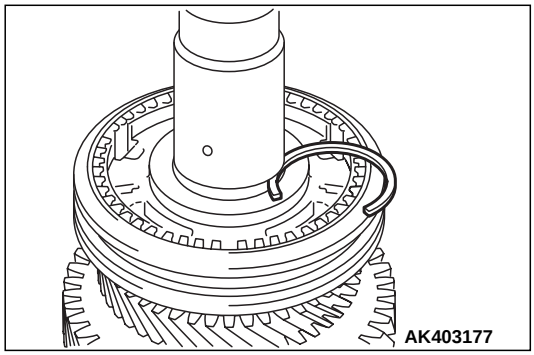

5. Remove the shaft snap ring.

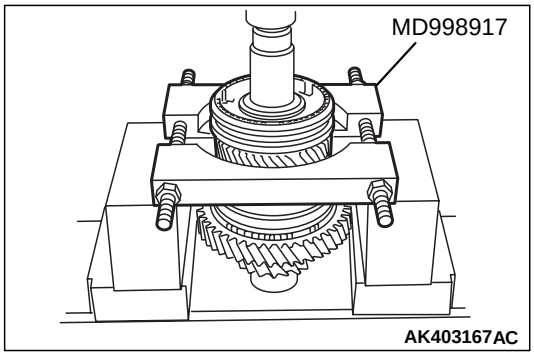

6. Using special tool Bearing remover (MD998917), support the 4th gear sub-assembly and remove the transmission hub sleeve No.2, ball, synchromesh shifting key spring, synchromesh shifting key No.1, transmission clutch hub No.2, synchronizer ring set No.4, synchronizer ring set No.1 and 4th gear sub-assembly.

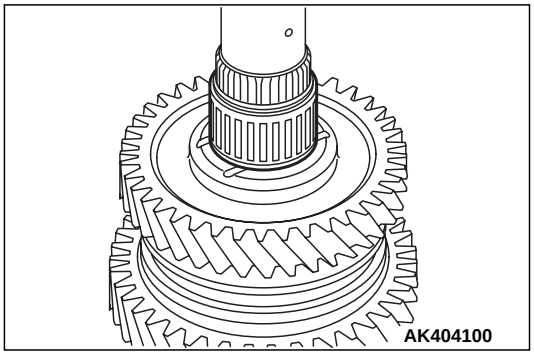

7. Remove the needle roller bearing.

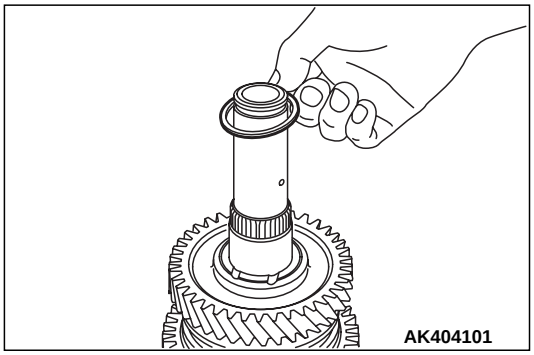

8. Remove the spacer.

⚠ CAUTION

- **Pay attention to the direction of inserting the transmission hub sleeve No.2.**
- **During press fit, confirm correct positions of the hub and the synchronizer ring.**
- **Check for smooth rotation of the gear after the installation.**
- **The synchronizer ring must not bind.**

18. Set the transmission hub sleeve No.2, transmission clutch hub No.2 to the output shaft No.1 in the direction as shown in the illustration.

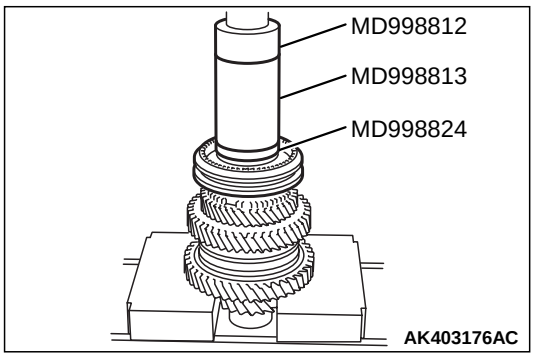

19. Using special tools, install the transmission clutch hub No.2.
- Installer cap (MD998812)
- Installer-100 (MD998813)
- Installer adapter (MD998824)

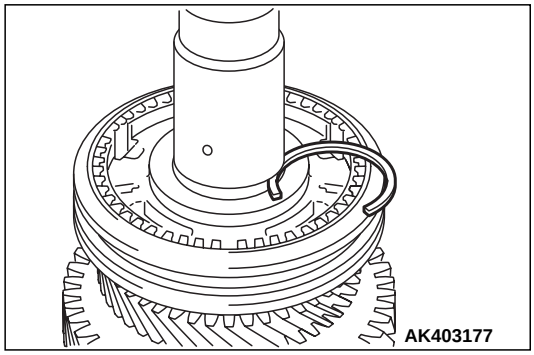

20. Select a shaft snap ring that allows distance of the thrust crevice of transmission clutch hub No.2 to fall within the standard value range.

Standard value: 0 – 0.1 mm

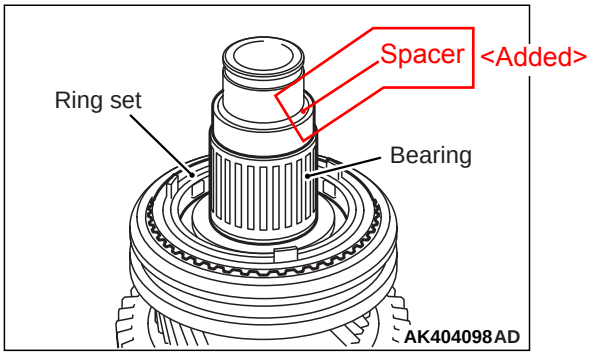

21. Insert the synchronizer ring set No.1, needle roller bearing to the transmission clutch hub No.2.

<Added>
and spacer

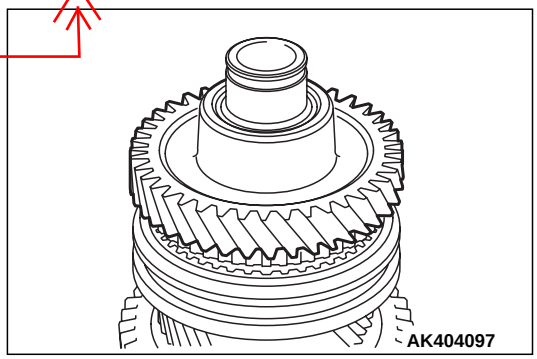

22. Insert the 3rd gear sub-assembly to the output shaft No.1.

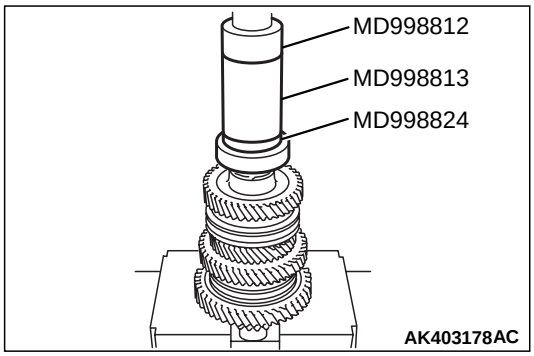

23. Using special tools, install the radial ball bearing.
- Installer cap (MD998812)
- Installer-100 (MD998813)
- Installer adapter (MD998824)

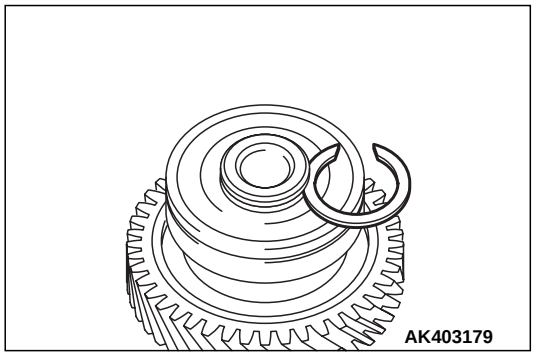

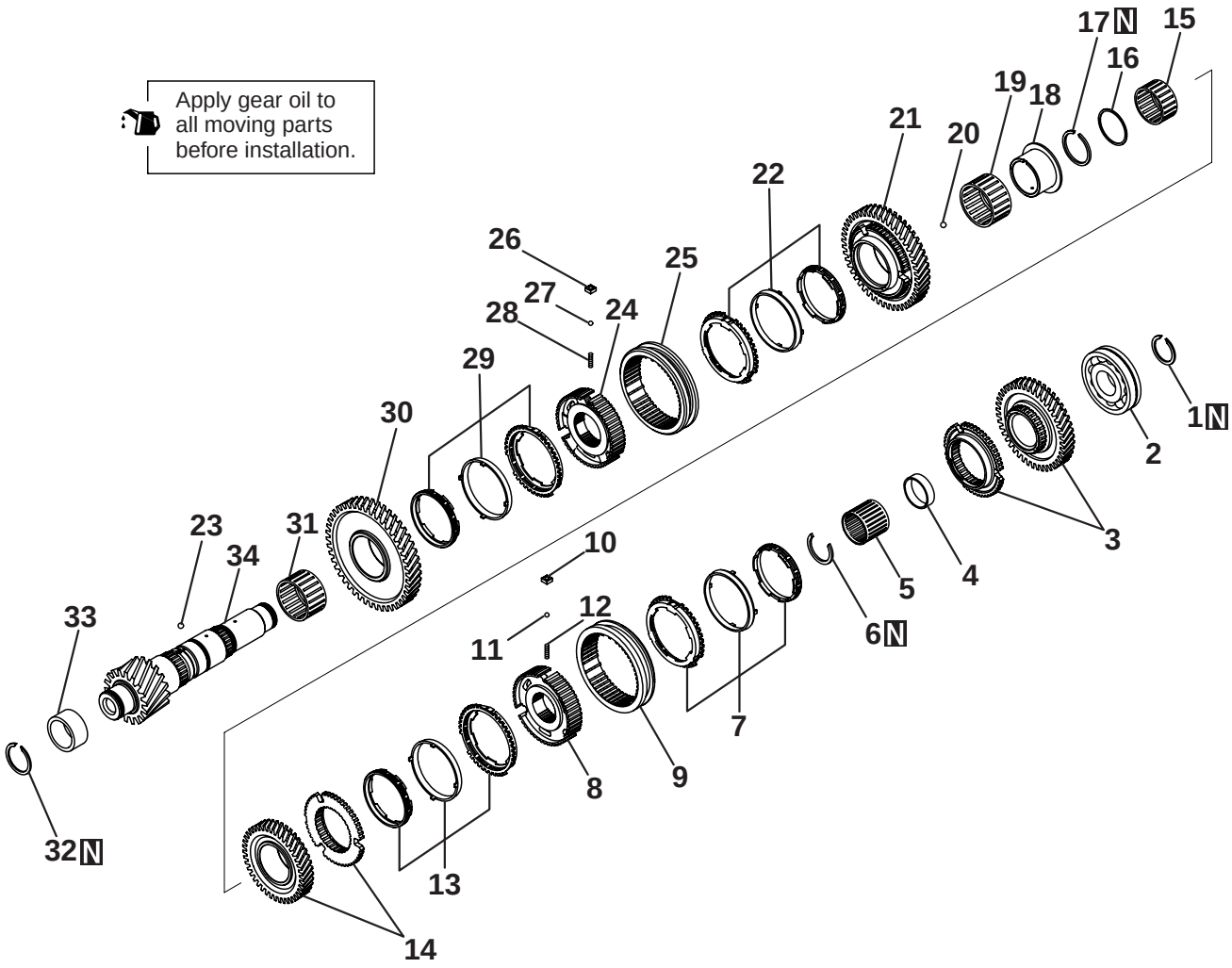

ACD02168AB

1. Shaft snap ring
2. Radial ball bearing
3. 3rd gear sub-assembly
4. Spacer
5. Needle roller bearing
6. Shaft snap ring
7. Synchronizer ring set No.1
8. Transmission clutch hub No.2
9. Transmission hub sleeve No.2
10. Synchromesh shifting key No.1
11. Ball
12. Synchromesh shifting key spring
13. Synchronizer ring set No.4
14. 4th gear sub-assembly
15. Needle roller bearing
16. Spacer
17. Shaft snap ring
18. 2nd gear bearing inner race
19. Needle roller bearing
20. Ball
21. 2nd gear
22. Synchronizer ring set No.1
23. Ball
24. Transmission clutch hub No.1
25. Transmission hub sleeve No.1
26. Synchromesh shifting key No.1
27. Ball
28. Synchromesh shifting key spring
29. Synchronizer ring set No.1
30. 1st gear
31. Needle roller bearing
32. Shaft snap ring
33. Cylindrical roller bearing
34. Output shaft No.1