# SERVICE BULLETIN

MITSUBISHI MOTORS

GLOBAL AFTER SALES OFFICE, MITSUBISHI MOTORS CORPORATION

| | | |
|---|---|---|
| PURPOSE : INFORMATION | ISSUE NO. : MSB-14E42-003 | DATE : 2014-12-25 |
| SUBJECT : INFORMATION ON 2016MY OUTLANDER(KD MODEL) | | <DESTINATION/MODEL> (RUSSIA) OUTLANDER(GF0W) <M/Y> 16 |
| GROUP : Gr.42(Body) | | |

## 1. Description :

This Service Bulletin contains the information about the 2016MY OUTLANDER(KD) Body Repair Manual. Main groups for changing in 16MY are Gr.1, Gr.3, Gr.5 and Gr.6.

## 2. Affected service manuals :

| Applicable manual | Pub. No. |
|---|---|
| 2014 OUTLANDER Workshop Manual (Russia KD) | N/A |

## 3. About the details :

Please refer to the attached document

## 4. Effective time : From 16MY vehicles.

# GROUP 1

# BODY CONSTRUCTION

## CONTENTS


**GENERAL INFORMATION . . . . . 1-2**

**BODY CONSTRUCTION CHARACTERISTICS . . . . . 1-2**

FRONT BODY. . . . . 1-2

SIDE BODY. . . . . 1-4

**SILENCER APPLICATION LOCATIONS . . . . . 1-5**

**STIFFENER AND DAMP SHEET APPLICATION LOCATIONS . . . . . 1-5**

# GENERAL INFORMATION

M4010000200880

## OUTLINE OF CHANGE

The sections "FRONT BODY", "SIDE BODY", "SILENCER APPLICATION LOCATIONS" and "STIFFENER AND DAMP SHEET APPLICATION LOCATIONS" have been changed.

# BODY CONSTRUCTION CHARACTERISTICS

## FRONT BODY

M4010010001857

## FENDER SHIELD

A spring house corner gusset front has been added to improve the rigidity of the vehicle body.

**<Right side>**

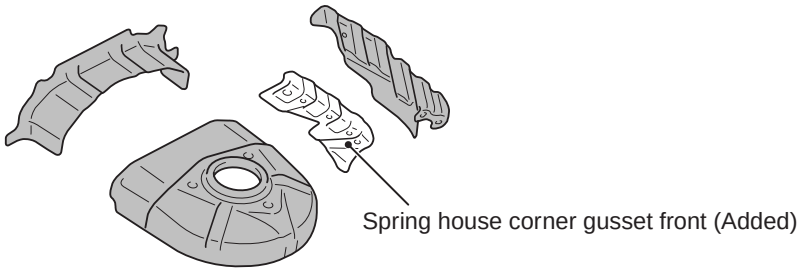


NOTE :
: Indicate the same parts as for previous models.

**ABE00578AB**

**<Left side>**

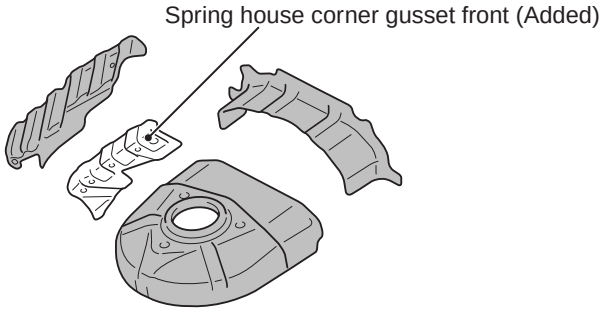


NOTE :
: Indicate the same parts as for previous models.

**ABE00579AB**

## FRONT SIDEMEMBER REINFORCEMENT

The following components have been added.

**<Left side>**

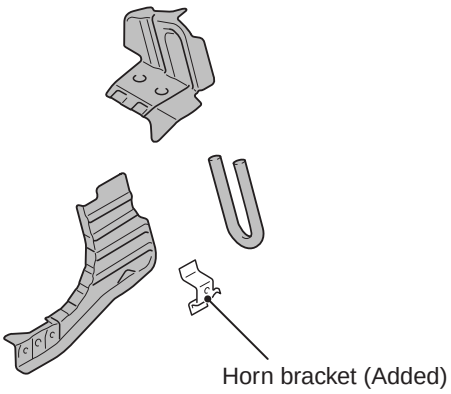


NOTE :
: Indicate the same parts as for previous models.

ABE00580AB

## FRONT DECK

- A cowl top panel reinforcement lower has been added to improve the rigidity of the front deck.
- Due to the introduction of a heated windshield, a wiring harness bracket has been added. <Vehicles with heated windshield>

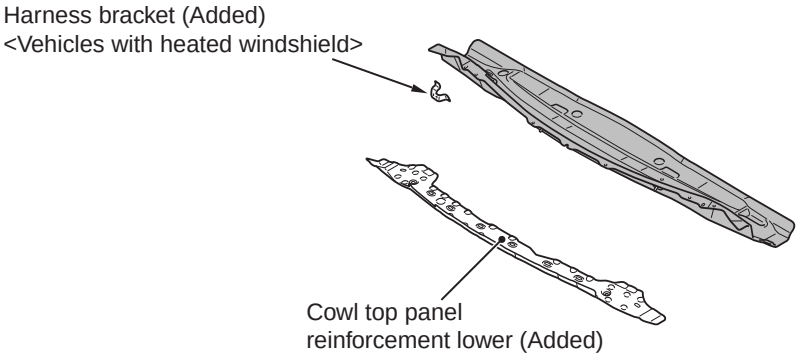


NOTE :
: Indicate the same parts as for previous models.

ABE00678AB

## SIDE BODY

M4010011001797

## SIDE STRUCTURE

An upper frame to front pillar brace has been added to improve the rigidity of the vehicle body.

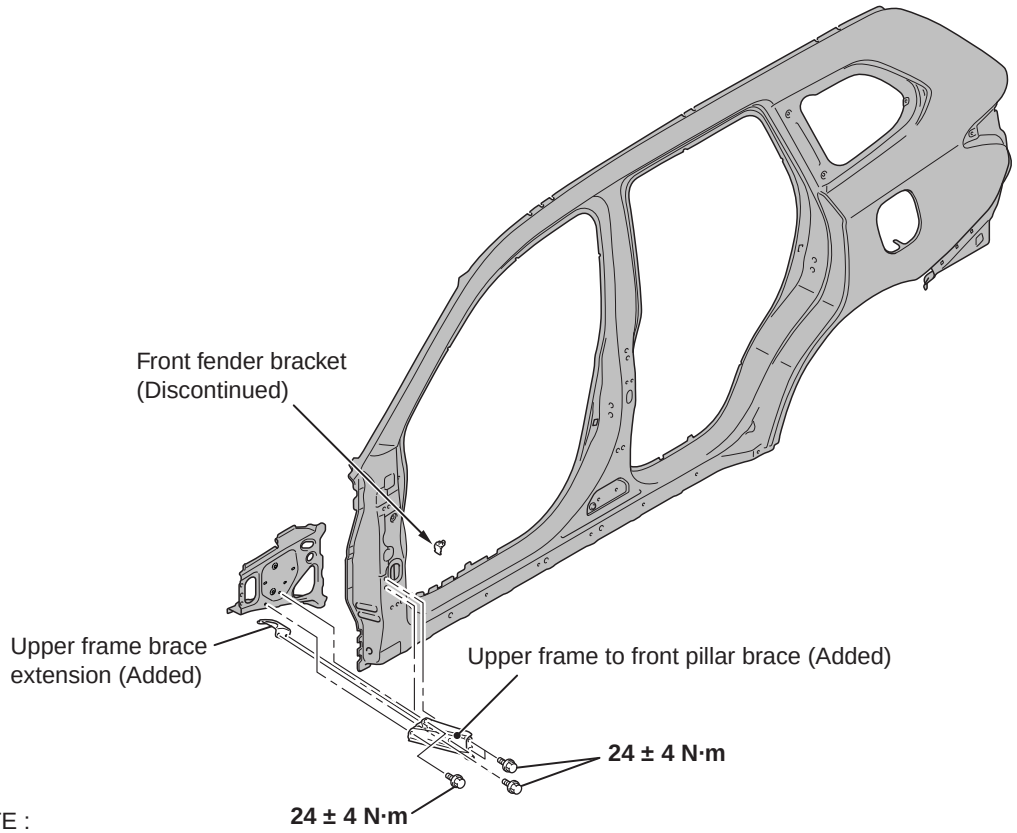


NOTE :
: Indicate the same parts as for previous models.

ABE00586AB

# SILENCER APPLICATION LOCATIONS

M4010005002791

The silencer, which is adhered on the floor, has been changed.

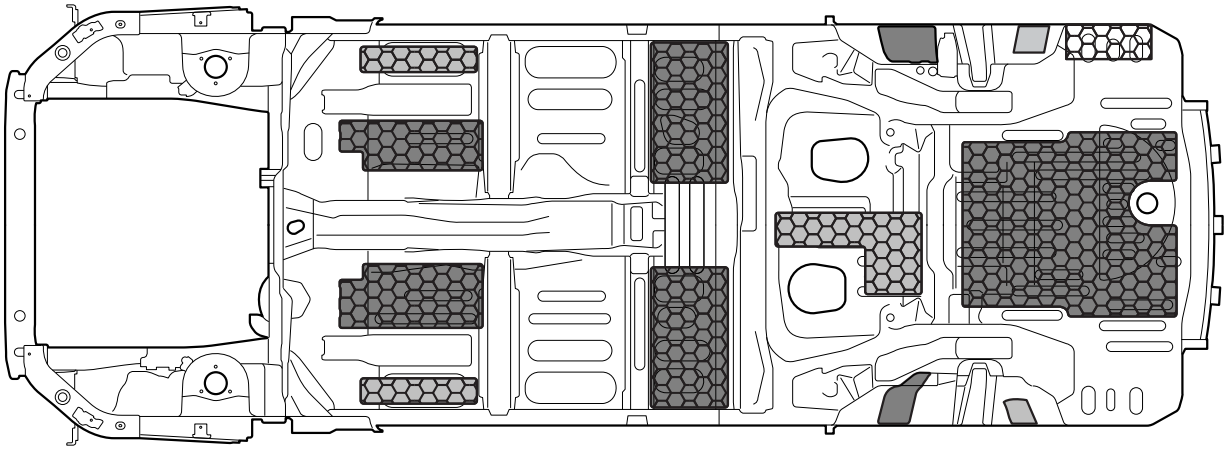

NOTE:
: 1.5 mm thick melting sheet (Use a melting sheet.)
: 3.1 mm thick melting sheet (Use two melting sheets.)
: 1.6 mm thick MD-12 (Use a melting sheet.)
: 1.8 mm thick MD-12 (Use two melting sheets.)
: 3.2 mm thick MD-12 (Use two melting sheets.)
( ) indicates the number of 1.6 mm thick melting sheets that are used for repair.

**ABE00680AB**

# STIFFENER AND DAMP SHEET APPLICATION LOCATIONS

M4010001400542

Stiffeners and damping sheets have been added to improve sound insulation performance.

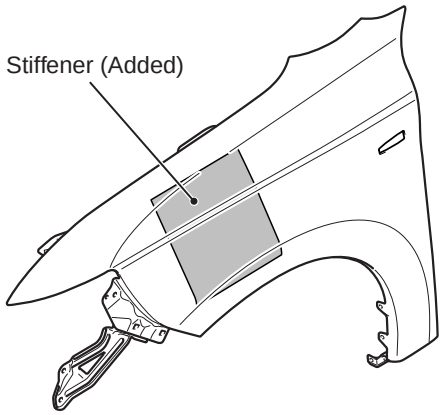


**ABE00612AB**

<Right side>

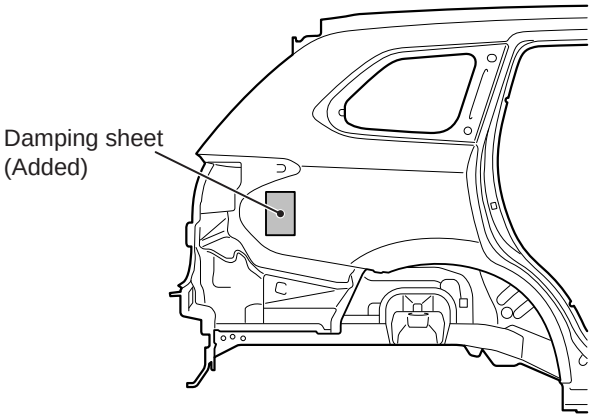


<Left side>

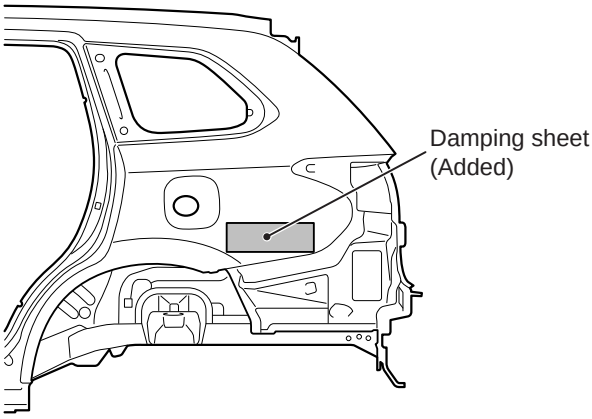


ABE00576AB

<Front door>

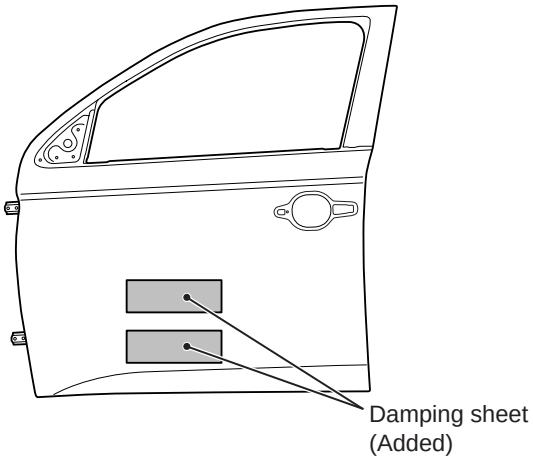


<Rear door>

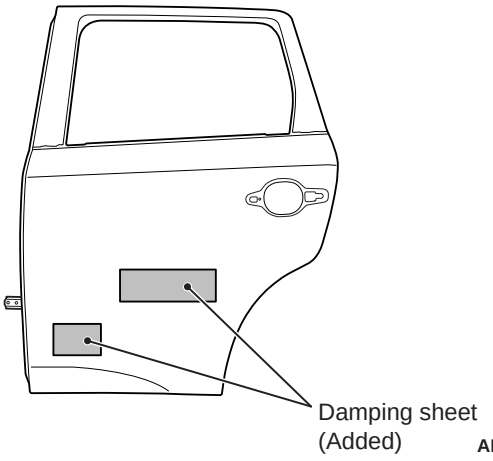


ABE00582AB

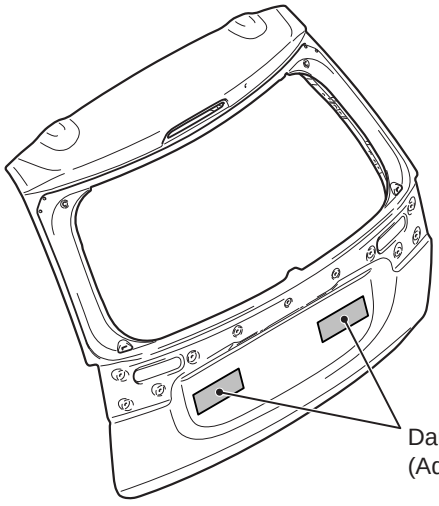


ABE00583AB

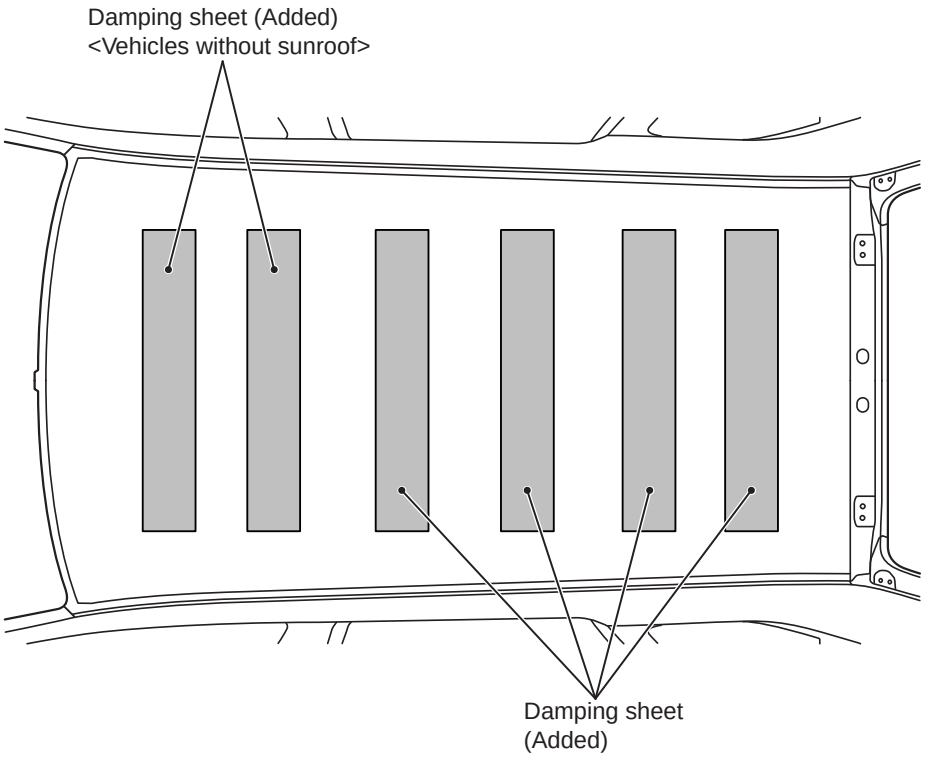


ABE00604AB

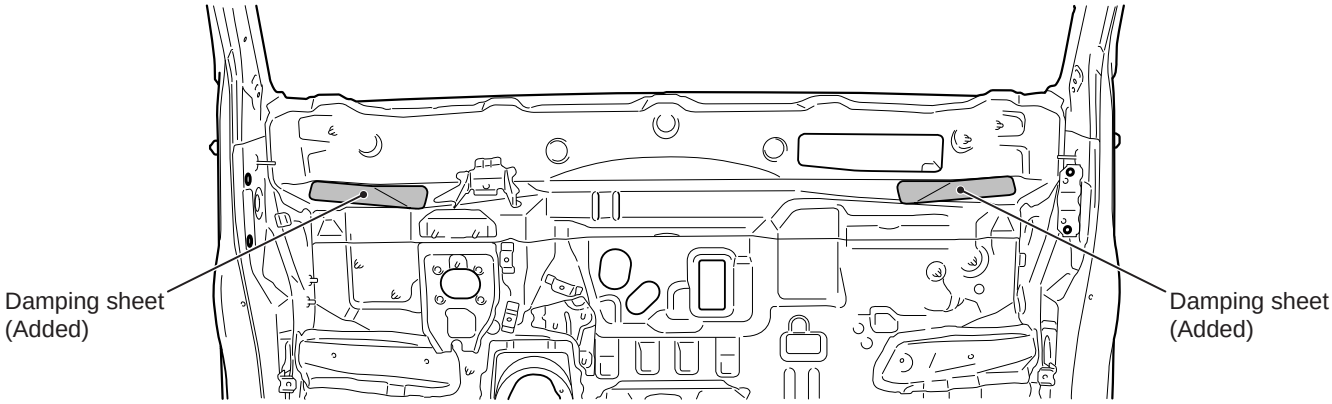


ABE00577AB

## NOTES

## GROUP 3

# WELDED PANEL REPLACEMENT

### CONTENTS

GENERAL INFORMATION . . . . . 3-2
FRONT PILLAR . . . . . 3-2

# GENERAL INFORMATION

M4030000900494

## OUTLINE OF CHANGE

The section "FRONT PILLAR" below has been changed.

# FRONT PILLAR

M4030005002210

Due to the addition of upper frame to front pillar brace, the repair procedures have been changed. The other service procedures are the same as before.

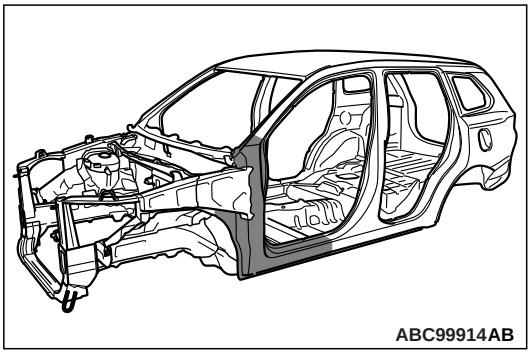


| Symbol | Operation description |
|---|---|
| ● ● ● ● | Spot welding |
| ■ ■ ▲ ▲ | MIG plug welding (■: indicates two panels to be welded ▲: indicates three panels to be welded) |
| ++++ | MIG spot welding |
| ⫴⫴⫴⫴⫴⫴⫴⫴ | MIG arc welding (continuous) |
| ∞∞∞∞∞∞ | Braze welding |
| | Anti-corrosion agent application locations (Use access holes to apply liberally to butt-welded joints.) |

**REPAIR WELDS**

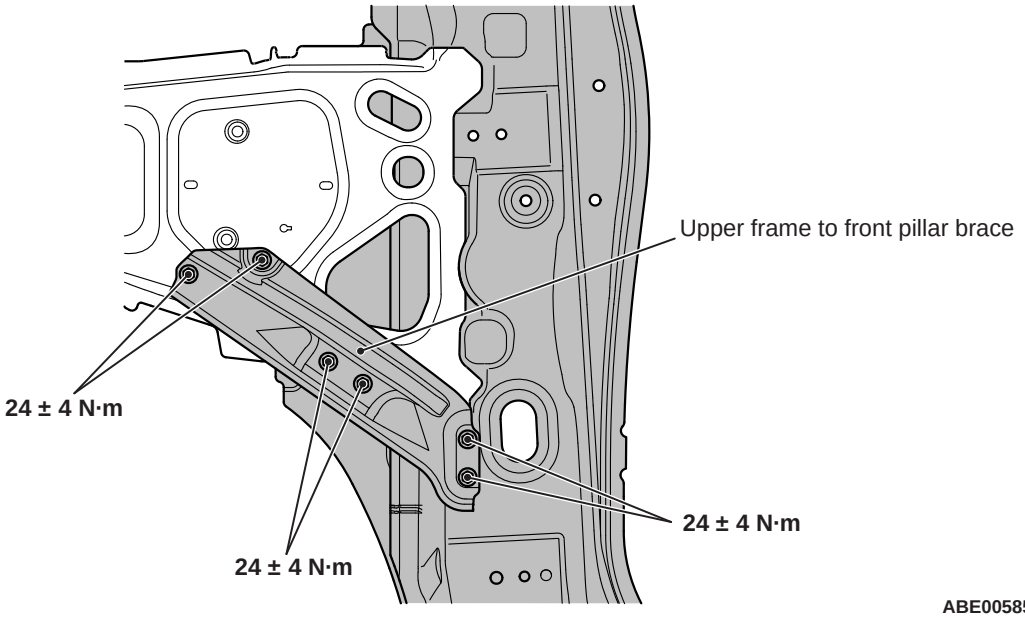

## NOTE ON REPAIR WORK

## INSTALLATION

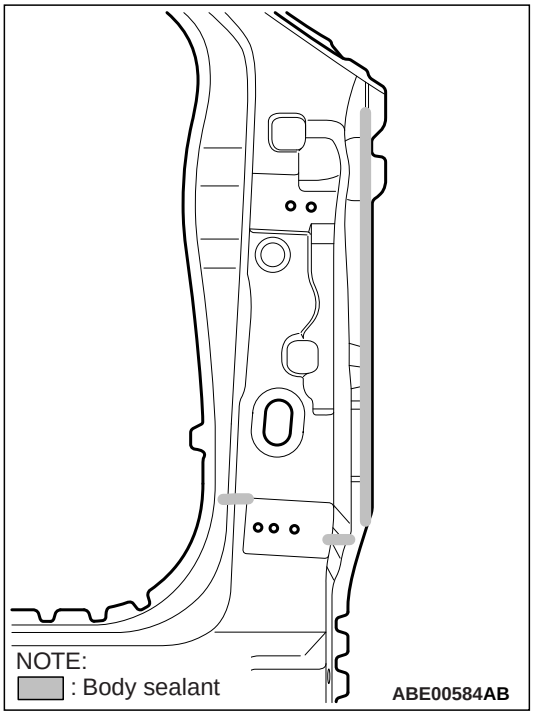


Prior to assembling the new front outer pillar parts, apply the body sealant to the area shown in the figure.

## NOTES

## GROUP 5

# SYNTHETIC-RESIN PARTS

### CONTENTS

LOCATION OF SYNTHETIC-RESIN PARTS . . . . . 5-2

# LOCATION OF SYNTHETIC-RESIN PARTS

M4050001002287

Indicates the main usage locations that have been changed or added.

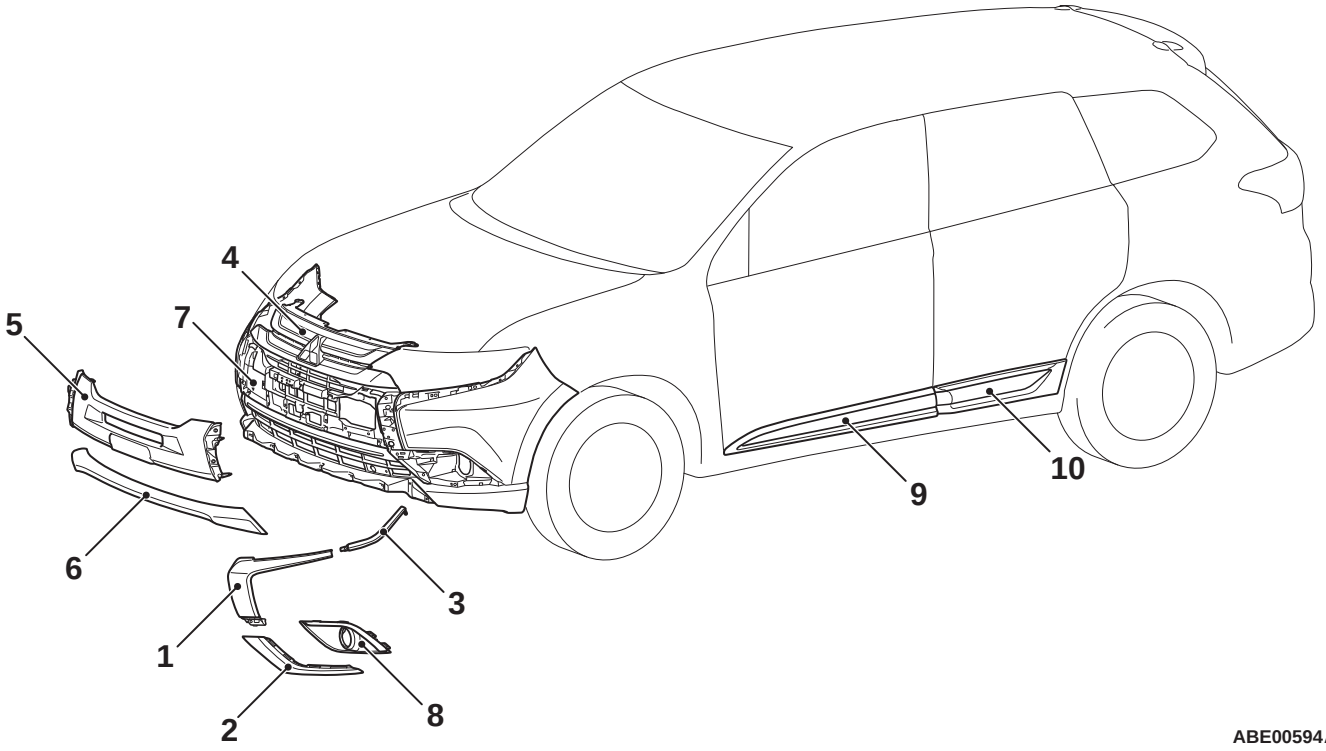


ABE00594AB

| No. | Part Name | Name Of Resin | Abbreviation | Heat-resistant Temp [°C] |
|---|---|---|---|---|
| 1 | Front bumper side centre garnish | Acrylonitrile butadiene styrene | ABS | 80 |
| 2 | Front bumper side lower garnish | | | |
| 3 | Front bumper side upper garnish | | | |
| 4 | Radiator grille | | | |
| 5 | Front bumper centre cover | Rubber modified polypropylene | PP+E/P | 80 |
| 6 | Front bumper extension | | | |
| 7 | Front bumper face | | | |
| 8 | Front fog lamp bezel | | | |
| 9 | Front door garnish | | | |
| 10 | Rear door garnish | | | |

*NOTE:*

- *A slash (/) in the material symbol indicates that two different materials make two-layer construction. A plus sign (+) indicates that the two different materials mix each other.*
- *The material symbols for synthetic-resin parts are embossed on the parts in hidden places.*

# GROUP 6

# BODY COLOUR

## CONTENTS


**GENERAL INFORMATION . . . . . 6-2**

**BODY COLOUR CHARTS. . . . . 6-2**

**BODY COLOURING . . . . . 6-3**

FRONT BUMPER . . . . . 6-3

REAR BUMPER . . . . . 6-3

# GENERAL INFORMATION

M4060000201338

## OUTLINE OF CHANGE

- The section "BODY COLOUR CHARTS" has been changed.
- The section body colouring of "FRONT BUMPER" and "REAR BUMPER" have been changed.

# BODY COLOUR CHARTS

M4060002004522

Check the vehicle's body colour code, and then use this body colour chart to determine the refinishing paint supplier from which the colour can be purchased.

| Colour | Colour code | Colour number | Colour name | Coating film structure | Composition of film |
|---|---|---|---|---|---|
| BROWN | C10 | CZC10010 | Brun Hickory | 2M | Metallic |
| BLUE | D21 | CZD10021 | Bleu Montebello | 2P | Pearl |
| SILVER | U22 | CZU10022 | Gris Aluminum | 2M | Metallic |
| GRAY | U23 | CZU10023 | Gris Shark | 2M | Metallic |
| WHITE | W73 | CZW10073 | Blanc Banquise | 2S | Solid |
| WHITE | W76 | CZW10076 | Blanc Nacre | 3P | Pearl |
| BLACK | X38 | CZX10038 | Noir Perla Nera | 2M | Metallic |

*NOTE:*

- *The coating film structure indicates top coating only (2S: 2 coat solid, 2M: 2 coat metallic, 2P: 2 coat pearl, 3P: 3 coat pearl).*
- *For painting, inner panel colours should be similar to the outer panel colours.*
- *The roof rail is coated in black (AC10657) or silver (AC11169).*

# BODY COLOURING

## FRONT BUMPER

M4060000500444

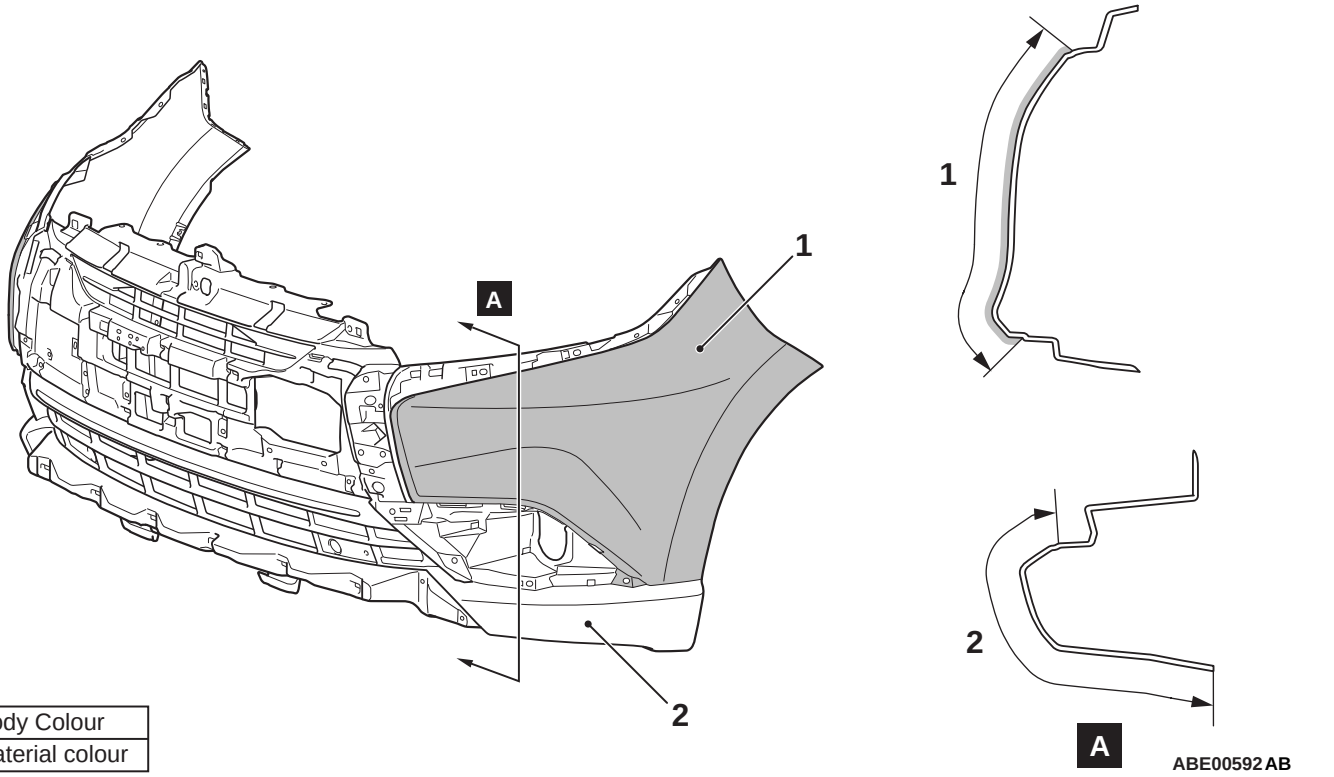


| | |
|---|---|
| 1 | Body Colour |
| 2 | Material colour |

## REAR BUMPER

M4060000300309

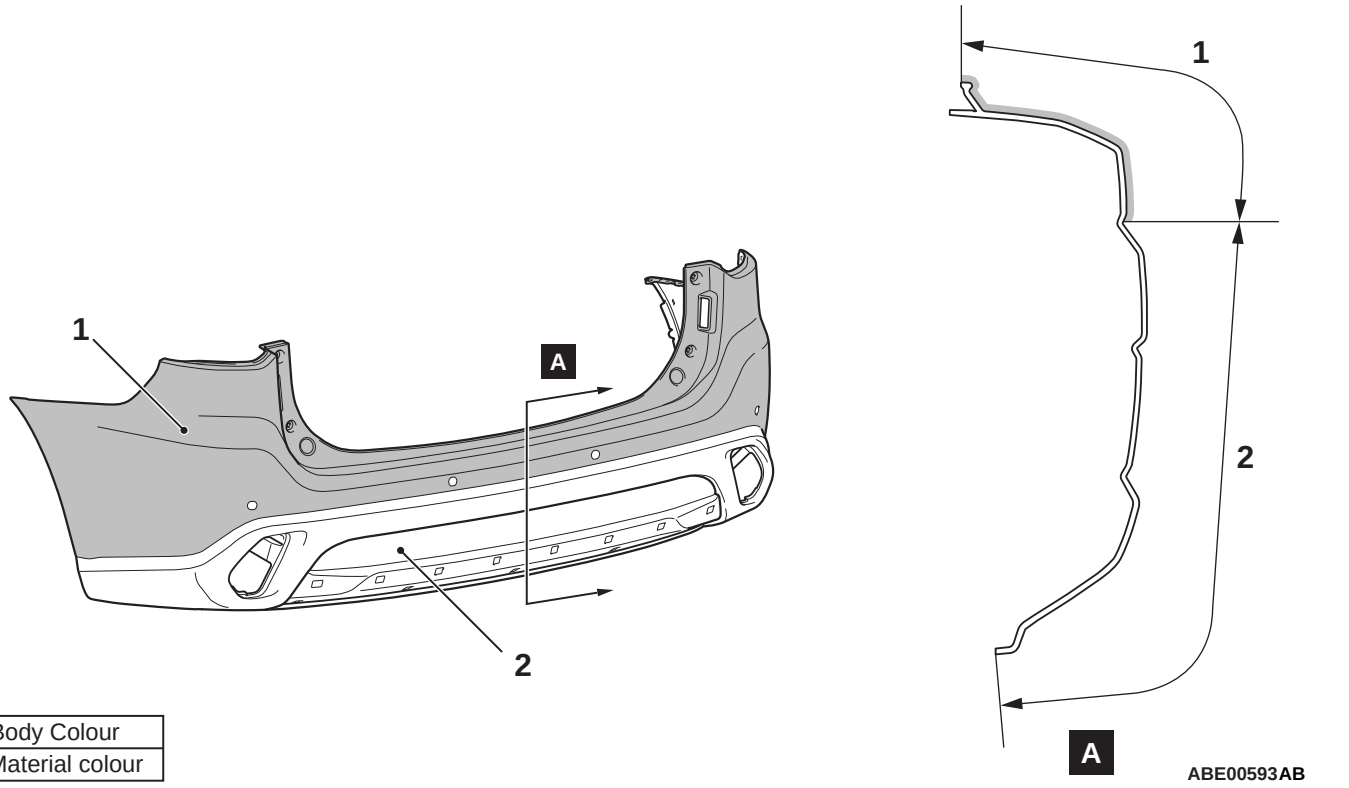


| | |
|---|---|
| 1 | Body Colour |
| 2 | Material colour |

## NOTES