MITSUBISHI MOTORS

SERVICE BULLETIN

GLOBAL AFTER SALES OFFICE, MITSUBISHI MOTORS CORPORATION

PURPOSE : CHANGE	ISSUE NO. : MSB-14E54-001A	DATE : 2014-09-08
SUBJECT : DRIVE BATTERY REMOVAL AND INSTALLATION		<DESTINATION/MODEL> <M/Y> (EUR) 14-14.5
GROUP : POWER UNIT/DRIVE BATTERY(G:54D)		OUTLANDER PHEV(GG0W)

1. Description :

Please refer to the attached document for the information about the change of mention in the applicable service manual. (The procedure of removal and installation of the drive battery has been established for the improvement of maintenance).

2. Affected service manuals :

Applicable manual	Pub. No.	Applicable title (INFO ID)	Contents
2014 OUTLANDER/ OUTLANDER PHEV Workshop Manual	CGFE14E2-CD (English) CGFF14E2-CD (French) CGFG14E2-CD (German) CGFS14E2-CD (Spanish) CGFI14E2-CD (Italian)	LUBRICANTS (M549-40-320-03200-01) Added under	Attached sheet 43, 46(1/2)A
		SPECIAL TOOLS (M549-40-020-13000-01)	Attached sheet 44, 46(1/2)B, 46(2/2)
		DRIVE BATTERY REMOVAL AND INSTALLATION (M549-40-130-16300-01) Added under	Attached sheet 45, 47 to 85
2014.5 OUTLANDER/ OUTLANDER PHEV Workshop Manual	CGFE14E3-CD (English) CGFF14E3-CD (French) CGFG14E3-CD (German) CGFS14E3-CD (Spanish) CGFI14E3-CD (Italian)	LUBRICANTS (M549-40-320-03200-01) Added under	Attached sheet 43, 46(1/2)A
		SPECIAL TOOLS (M549-40-020-13000-01)	Attached sheet 44, 46(1/2)B, 46(2/2)
		DRIVE BATTERY REMOVAL AND INSTALLATION (M549-40-130-16301-01) Added under	Attached sheet 45, 47 to 85

3. About the details :

Please refer to the attached document (Attached sheets 43-85)

The attached sheets of 46, 53 71,72 and 80 have been amended in revised A version.

		MSB No.	Issued Date	
Original		MSB-14E54-001	2014/4/17	
Revision	**A**	**MSB-14E54-001A**	**2014/9/8**	**※This time**

Attached sheet 43

LUBRICANT

Item	Specified lubricant	Quantity	Remark
O-ring (for the traction battery cable)	NIGLUBE RM or equivalent	As required	Brake grease

<Added>

Attached sheet 46 (1/2) A

Tool	Number	Name	Use
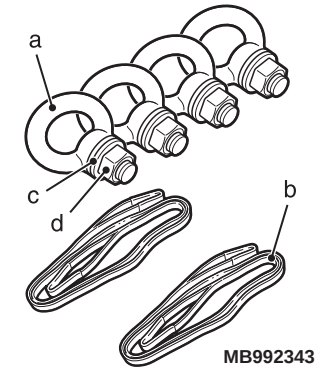 MB992343	MB992343 a: MB992344 x 4 b: MB992345 x 2 c: MF450156 x 8 d: MU001480 x 4	EV battery sling tool cart a: Eye bolt b: EV battery sling belt c: Washer d: Hexagon nut	Traction battery moving
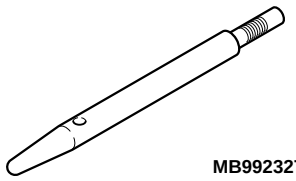 MB992327	MB992327	EV battery guide	Traction battery installation (2 pieces are used)

<Added>
Attached sheet 46 (1/2) B, Attached sheet 46 (2/2)

2. Install the two outer cable mounting bolts.
3. Install the two inner cable mounting bolts.

>>F<< DRIVE BATTERY FRONT CABLE (P, N LINE) CONNECTION

1. Insert the drive battery front cable (P, N line) into the drive battery assembly.
2. Install the two outer cable mounting bolts.
3. Install the two inner cable mounting bolts.

>>G<< BATTERY FRONT CENTRE PROTECTOR PAD INSTALLATION

Degrease the pad mounting surface on the battery front centre protector with the Mitsubishi Genuine parts cleaner (MZ100387).

>>H<< SERVICE LID COVER, SERVICE LID, SERVICE PLUG INSTALLATION

Refer to .

<Added>
Attached sheet 47 to 85

SEALANTS

M1549403100046

Application	Brand name
Battery tray cover to plug hole cover	Butyl rubber tape (MS995033) (SUNDINE #60, AISHIN SEAL TAPE #50, #60)

SPECIAL TOOL

M1549400200174

Tool	Number	Designation	Use
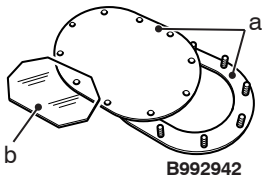 B992942	MB992942	Service plug cover a. Service plug duct seal attachment set b. Service plug gasket	Air leak check of the drive battery assembly
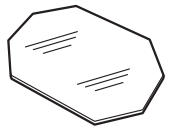 B992943	MB992943	Service plug gasket	Air leak check of the drive battery assembly *NOTE: b. Service plug gasket included in the service plug cover (MB992942)*
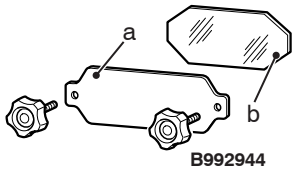 B992944	MB992944	Front harness cover a. Harness cover plate b. Front harness gasket	Air leak check of the drive battery assembly
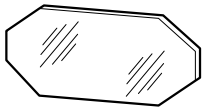 B992945	MB992945	Front harness gasket	Air leak check of the drive battery assembly *NOTE: b. Front harness gasket included in the front harness cover (MB992944)*
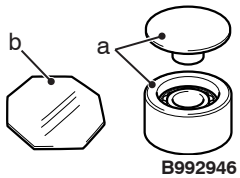 B992946	MB992946	Drain plug cover a. Drain plug cover b. Drain plug gasket	Air leak check of the drive battery assembly
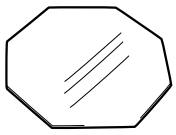 B992947	MB992947	Drain plug gasket <Correct> A b.	Air leak check of the drive battery<Incorrect> *NOTE: ☒ Drain plug gasket included in the drain plug cover (MB992946)*

B

Tool	Number	Designation	Use
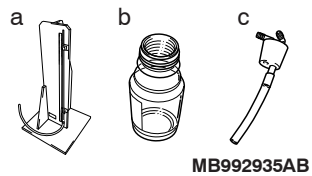 MB992935AB	MB992935	Pressure gauge unit a. Measuring bench b. Bottle c. Rubber plug with nipple	Air leak check of the drive battery assembly A c. <Added>
 MB992936	MB992936	Nipple (small diameter – large diameter)	Air leak check of the drive battery assembly *NOTE: Rubber plug with nipple included in the pressure gauge unit (MB992935)*
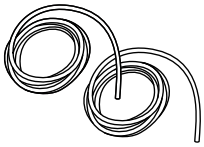 MB992937	MB992937	Hose (small diameter)	Air leak check of the drive battery assembly
 MB992938	MB992938	Air pump	Air leak check of the drive battery assembly
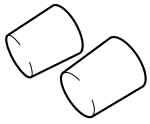 MB992939	MB992939	Plug (small diameter – large diameter)	Air leak check of the drive battery assembly
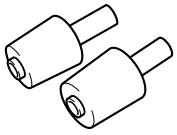 MB992940	MB992948	Nipple (small diameter – large diameter)	Air leak check of the drive battery assembly
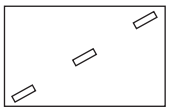 MB992915	MB992915	Electric insulation sheet	When you disassemble and reassemble the drive battery, cover the live wires to avoid electric shock caused by inadvertent contact.
–	MB992913	Battery charger/discharger	Drive battery module replacement
–	MB992926	LEV40 dummy battery module (eight cells)	Drive battery module replacement

TRACTION BATTERY DISASSEMBLY AND REASSEMBLY

Precautions on servicing the inside of the drive battery assembly

M1549403700037

⚠ ***DANGER***

Observe the following precautions during service operations inside the drive battery as they may cause an electric shock, electric leak, vehicle fires or disabled driveaway.

Precautions on handling high-voltage terminals

When doing any repair work in vicinity of the areas below, pay attention to the following.

Affected areas: Module terminal, bus bar, orange wiring harness and connectors, fuses, resistors, service plugs, and wires/connectors inside battery module assembly

- Touching two different terminals by bare hands simultaneously may cause burns.
- Touching two different terminals simultaneously by a rubber or metal object may cause fires due to a short circuit.
- Touching a terminal and its surrounding area by bare hands simultaneously may cause electric shocks or burns. (when leakage of electricity occurs)
- Touching a terminal and its surrounding area simultaneously by a rubber or metal object may cause fires due to a short circuit. (when leakage of electricity occurs)

NOTE: In the descriptions above, "rubber" indicates a part containing graphite such as tyres or coolant hoses. Isolated rubber products are not included.

- A contaminated or damaged terminal seating will increase contact resistance. This will cause vehicle fires due to overheat.
- A contaminated or damaged terminal thread will decrease terminal contact pressure. This will cause vehicle fires due to overheat.

NOTE: Check not only that a terminal nut is seated securely, but also that terminal contact surfaces are seated securely.

Precautions on other operations

How to handle tools

- Electric shocks, burns or fires may be caused if a tool, which is put or left on a component, contacts a high-voltage circuit.

How to handle metal parts

- If a metal part drops inside the drive battery assembly, leakage of electricity or short circuit may cause vehicle fires.

How to handle waterproof seals

- A deteriorated waterproof seal may cause water ingress inside the drive battery assembly. This will cause leakage of electricity, thus disabling the vehicle drive-away.

Service procedure

M1549403800056

⚠ CAUTION

- **When you assemble and disassemble the drive battery assembly, always wear electric-insulated gloves, boots and protection glasses.**
- **After you remove the drive battery, be sure to disconnect all of the four bus bars (A) from the front and rear modules to reduce the possibility of electric shock. Do not connect the four bus bars (A) until you complete the service work.**
- **Use the electric insulation sheet (MB992915) to protect the unaffected area (which you do not service) of the removed drive battery.**
- **When you service an electric terminal on the module, remove the respective cover ONLY (do not remove the other covers).**
- **Before engaging the bus bar, make sure that it is not scratched or contaminated.**
- **A damaged wiring harness clip should be replaced with new one.**
- **Always use a torque wrench to tighten a nut or bolt to the specified torque. Then identify it with a paint mark.**

After assembling the drive battery assembly, check the followings:

1. **Before mounting the drive battery assembly on the vehicle, check the drive battery assembly for air leaks.(Refer to .)**
2. **Use the M.U.T.-III to check that no diagnosis code is set.**

Rear JFB removal and installation

Service procedure	Work description	Reference page
1	Battery tray cover removal and installation	
2	Bus bar (A) removal and installation	
3	JFB cable (P and N lines) and battery cooling duct removal and installation	
4*	JFB rear cover (RH) removal and installation	
5	JFB rear cover (LH) removal and installation	
6	Rear JFB bus bar removal and installation	
10	Service plug assembly removal and installation	
13*	Rear JFB assembly (RH), rear JFB bus bar (X, Y, W), contactor removal and installation	

*NOTE: *: Vehicles with quick-charging system*

Front JFB removal and installation

Service procedure	Work description	Reference page
1	Battery tray cover removal and installation	
2	Bus bar (A) removal and installation	
3	JFB cable (P and N lines) and battery cooling duct removal and installation	
7	Evaporator duct assembly, drive battery cooling fan, drive battery cooling fan bracket removal and installation	
8	Drive battery harness removal and installation	
9	Leakage-of-electricity sensor on drive battery removal and installation	

Service procedure	Work description	Reference page
11	Bus bar (F, H) removal and installation	
15	JFB cover removal and installation	
16	Front JFB assembly, JFB bus bar (D, M, N, P, R), electric current sensor, contactor and resistor removal and installation	

Evaporator (for cooling the drive battery) removal and installation

Service procedure	Work description	Reference page
1	Battery tray cover removal and installation	
2	Bus bar (A) removal and installation	
3	JFB cable (P and N lines) and battery cooling duct removal and installation	
7	Evaporator duct assembly, drive battery cooling fan, drive battery cooling fan bracket removal and installation	
8	Drive battery harness removal and installation	
9	Leakage-of-electricity sensor on drive battery removal and installation	
11	Bus bar (F, H) removal and installation	
15	JFB cover removal and installation	
16	Front JFB assembly, JFB bus bar (D, M, N, P, R), electric current sensor, contactor and resistor removal and installation	
17	Evaporator (for cooling the drive battery) removal and installation	

Electric current sensor removal and installation

Service procedure	Work description	Reference page
1	Battery tray cover removal and installation	
2	Bus bar (A) removal and installation	
3	JFB cable (P and N lines) and battery cooling duct removal and installation	
7	Evaporator duct assembly, drive battery cooling fan, drive battery cooling fan bracket removal and installation	
8	Drive battery harness removal and installation	
9	Leakage-of-electricity sensor on drive battery removal and installation	
11	Bus bar (F, H) removal and installation	

Leakage-of-electricity sensor on drive battery removal and installation

Service procedure	Work description	Reference page
1	Battery tray cover removal and installation	
2	Bus bar (A) removal and installation	
3	JFB cable (P and N lines) and battery cooling duct removal and installation	

Service procedure	Work description	Reference page
7	Evaporator duct assembly, drive battery cooling fan, drive battery cooling fan bracket removal and installation	
8	Drive battery harness removal and installation	
9	Leakage-of-electricity sensor on drive battery removal and installation	

Module removal and installation

Service procedure	Work description	Reference page
1	Battery tray cover removal and installation	
2	Bus bar (A) removal and installation	
3	JFB cable (P and N lines) and battery cooling duct removal and installation	
4*	JFB rear cover (RH) removal and installation	
5	JFB rear cover (LH) removal and installation	
6	Rear JFB bus bar removal and installation	
7	Evaporator duct assembly, drive battery cooling fan, drive battery cooling fan bracket removal and installation	
8	Drive battery harness removal and installation	
9	Leakage-of-electricity sensor on drive battery removal and installation	
10	Service plug assembly removal and installation	
11	Bus bar (F, H) removal and installation	
12	Bus bar (C) removal and installation	
18	Battery support holder (A, B, C) removal and installation	
19	Battery module assembly removal and installation	
20	Battery upper holder (A) and battery lower holder (A) removal and installation	

*NOTE: *: Vehicles with quick-charging system*

Cell monitoring unit (CMU) removal and installation

Service procedure	Work description	Reference page
1	Battery tray cover removal and installation	
2	Bus bar (A) removal and installation	
3	JFB cable (P and N lines) and battery cooling duct removal and installation	
4*	JFB rear cover (RH) removal and installation	
5	JFB rear cover (LH) removal and installation	
6	Rear JFB bus bar removal and installation	
7	Evaporator duct assembly, drive battery cooling fan, drive battery cooling fan bracket removal and installation	
8	Drive battery harness removal and installation	
9	Leakage-of-electricity sensor on drive battery removal and installation	
10	Service plug assembly removal and installation	

Service procedure	Work description	Reference page
11	Bus bar (F, H) removal and installation	
12	Bus bar (C) removal and installation	
18	Battery support holder (A, B, C) removal and installation	
19	Battery module assembly removal and installation	
20	Battery upper holder (A) and battery lower holder (A) removal and installation	
21	Cell monitoring unit (CMU) removal and installation	

*NOTE: *: Vehicles with quick-charging system*

1. Battery tray cover removal and installation

M1549460100032

⚠ *WARNING*

Before the service work, make sure that the service plug is removed from the drive battery assembly.

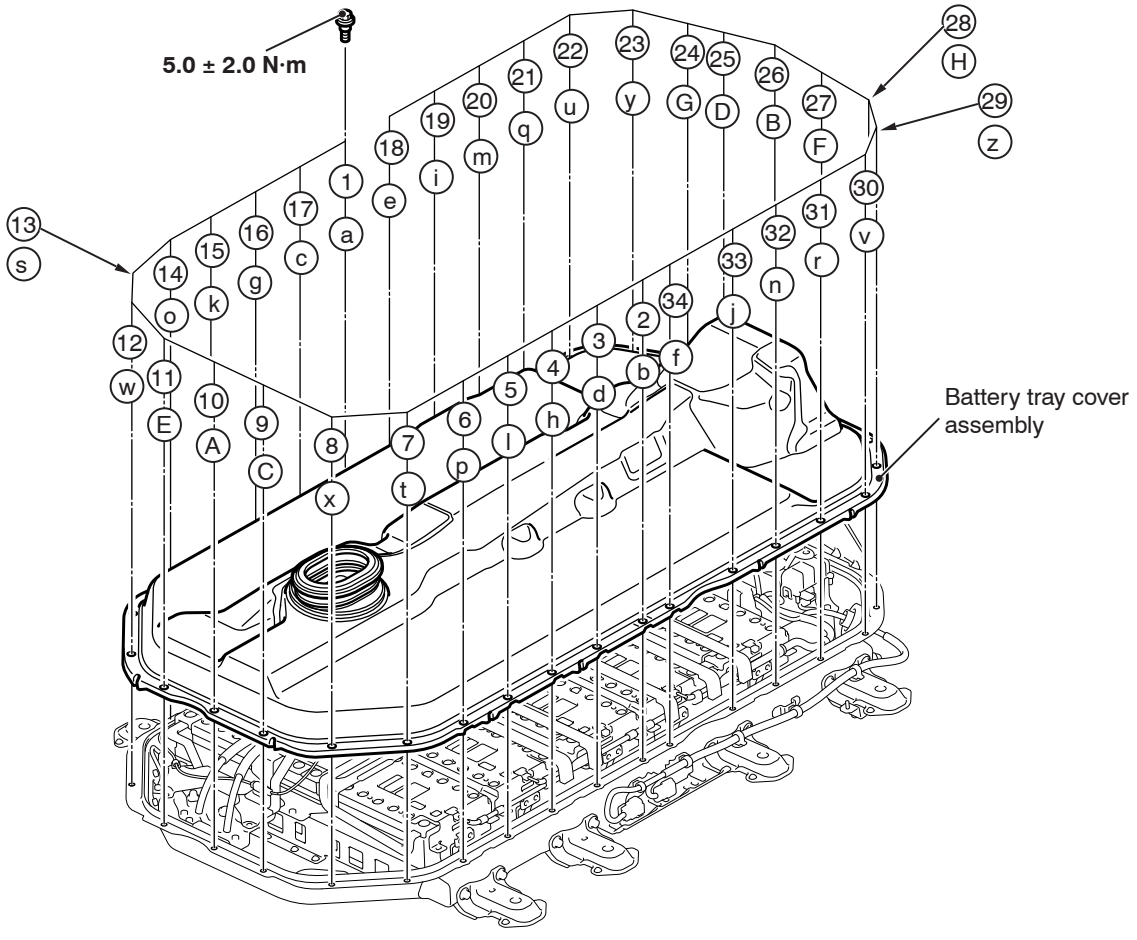

ACC06258AB

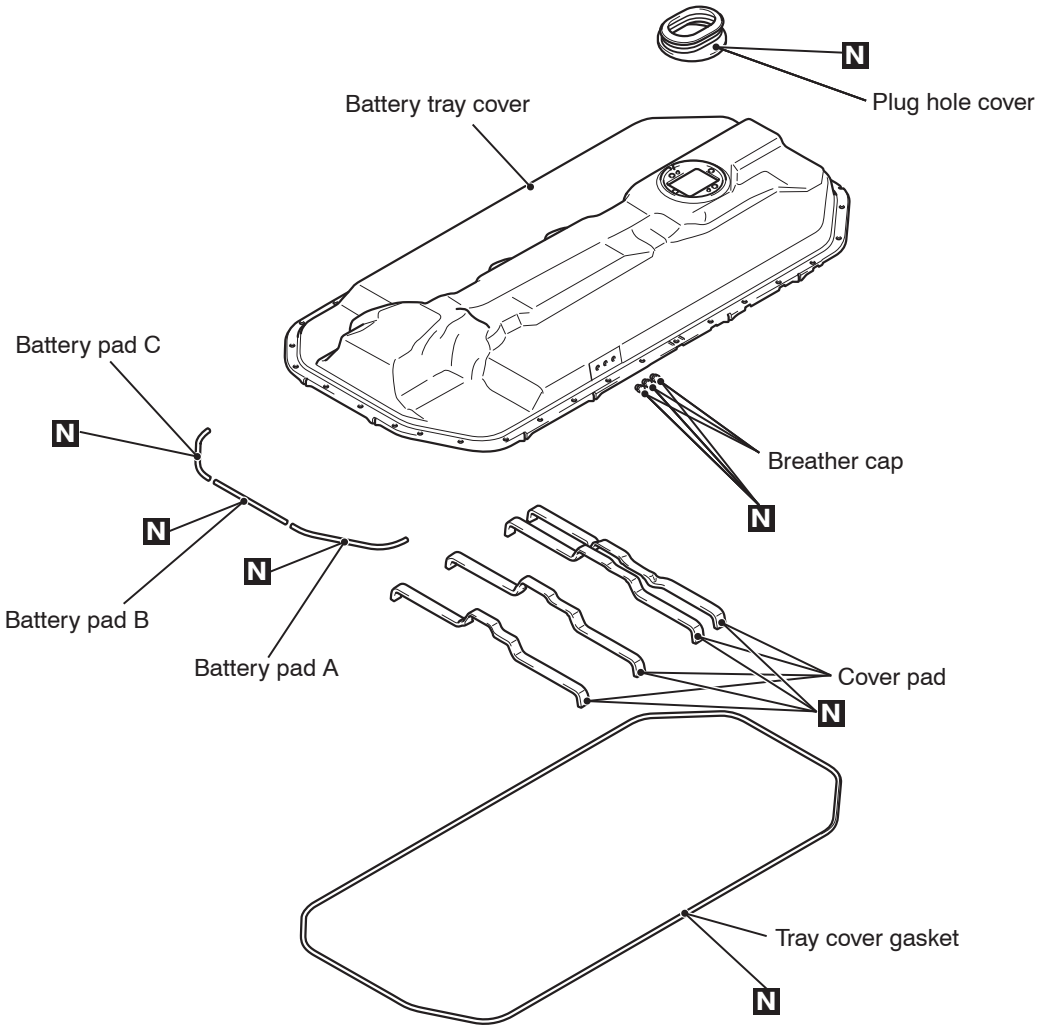

ACD02519AB

Battery tray cover removal

1. Remove the bolts to remove the battery tray cover assembly.
2. Remove the battery pad A, battery pad B and battery pad C.
3. Remove the tray cover gasket.
4. Remove the cover pads.
5. Remove the breather caps.
6. Remove the plug hole cover.

Battery tray cover installation

⚠ CAUTION

- **Butyl rubber tape (MS995033) (SUNDINE #60, AISHIN SEAL TAPE #50, #60): Application surface should be free of oil, grease or foreign materials.**
- **First, tighten all the bolts by hand until they are seated. Then after final tightening, check that all the bolts are tightened to the specified torque.**

Attached sheet 53

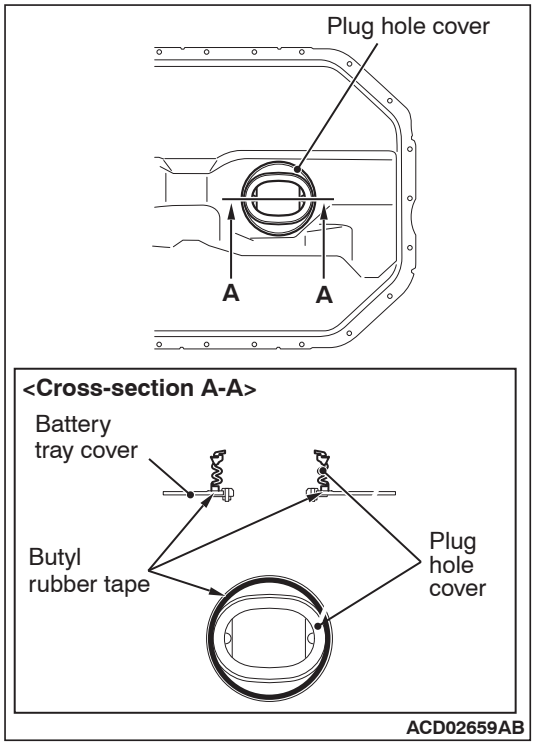

1. Apply the butyl rubber tape (MS995033) (SUNDINE #60, AISHIN SEAL TAPE #50, #60) to the plug hole cover as shown. Then install it to the battery tray cover.
2. Install the breather cap.

⚠ CAUTION
Application surface should be free of oil, grease or foreign materials.

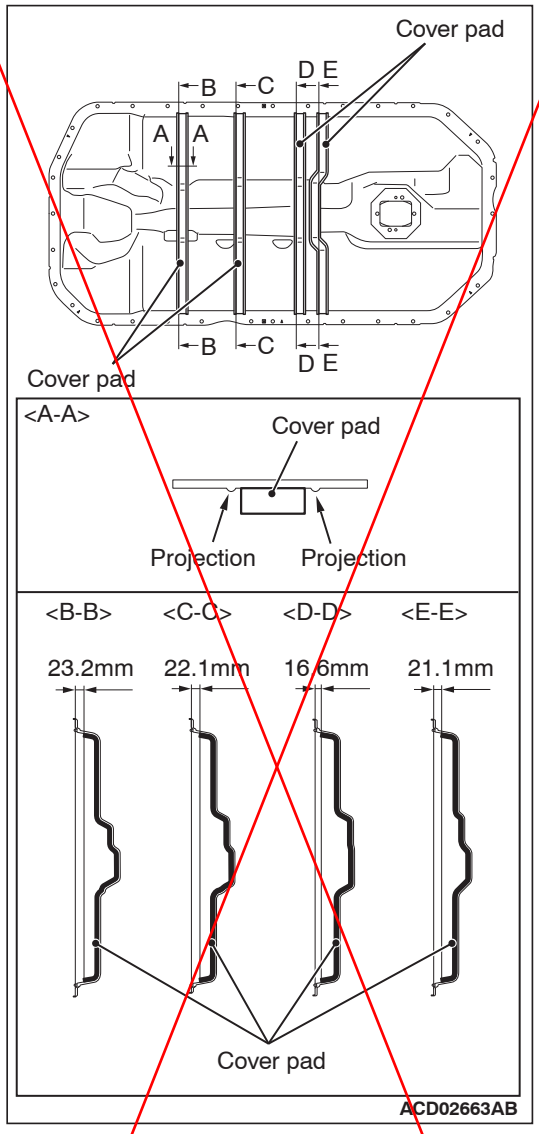

3. Position the cover pads as shown.

⚠ CAUTION
Application surface should be free of oil, grease or foreign materials.

4. Install the battery pad A, battery pad B and battery pad C.
5. Install the tray cover gasket.
6. Install the battery tray cover assembly, and then tighten the bolts to the specified torque in the order of 1 to 34 or a to H.

NOTE: The bolts can be tightened in either of the tightening sequences above.

<Old>
<New>
A
Attached sheet 53-1, 53-2

A <New>

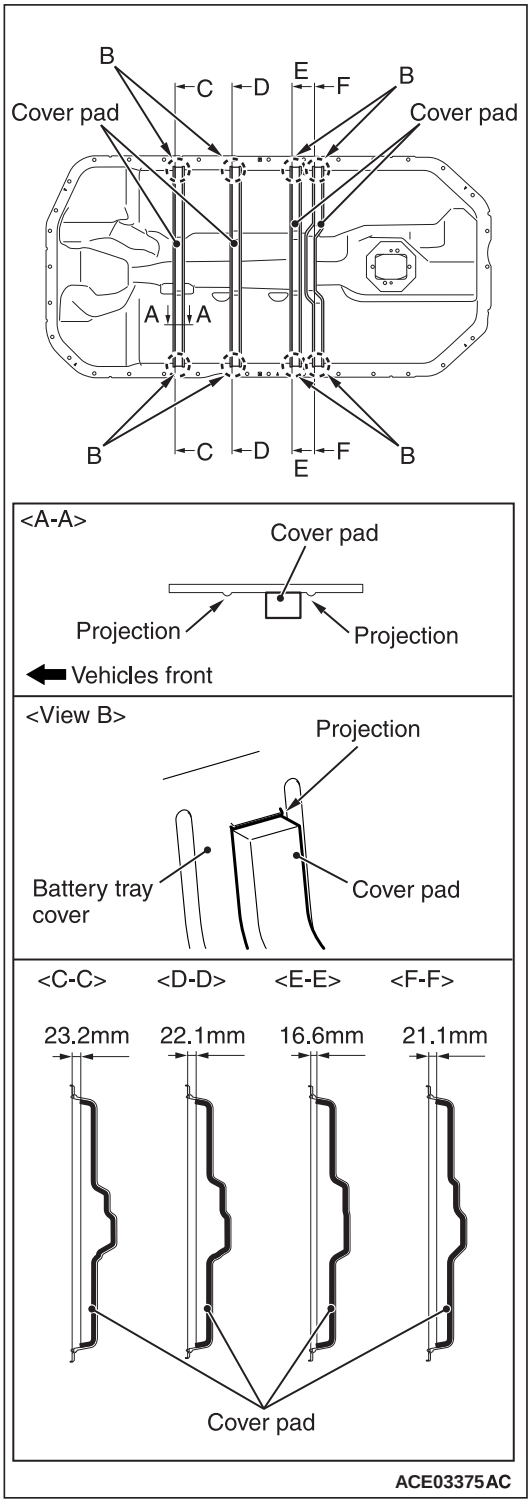

3. Position the cover pads as shown.

⚠ CAUTION

Application surface should be free of oil, grease or foreign materials.

4. Install the battery pad A, battery pad B and battery pad C.

A <New>

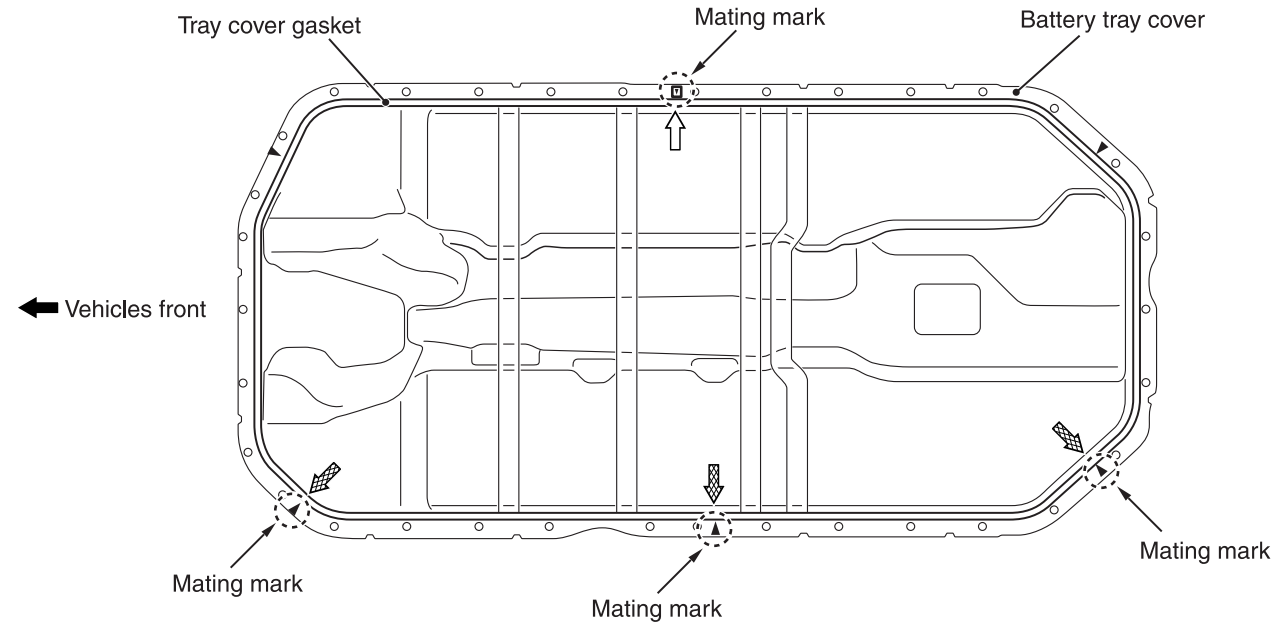

ACE03368AC

5. Position the tray cover gasket as shown.
6. Install the battery tray cover assembly, and then tighten the bolts to the specified torque in the order of 1 to 34 or a to H.

NOTE: The bolts can be tightened in either of the tightening sequences above.

2. Bus bar (A) removal and installation

M1549460200039

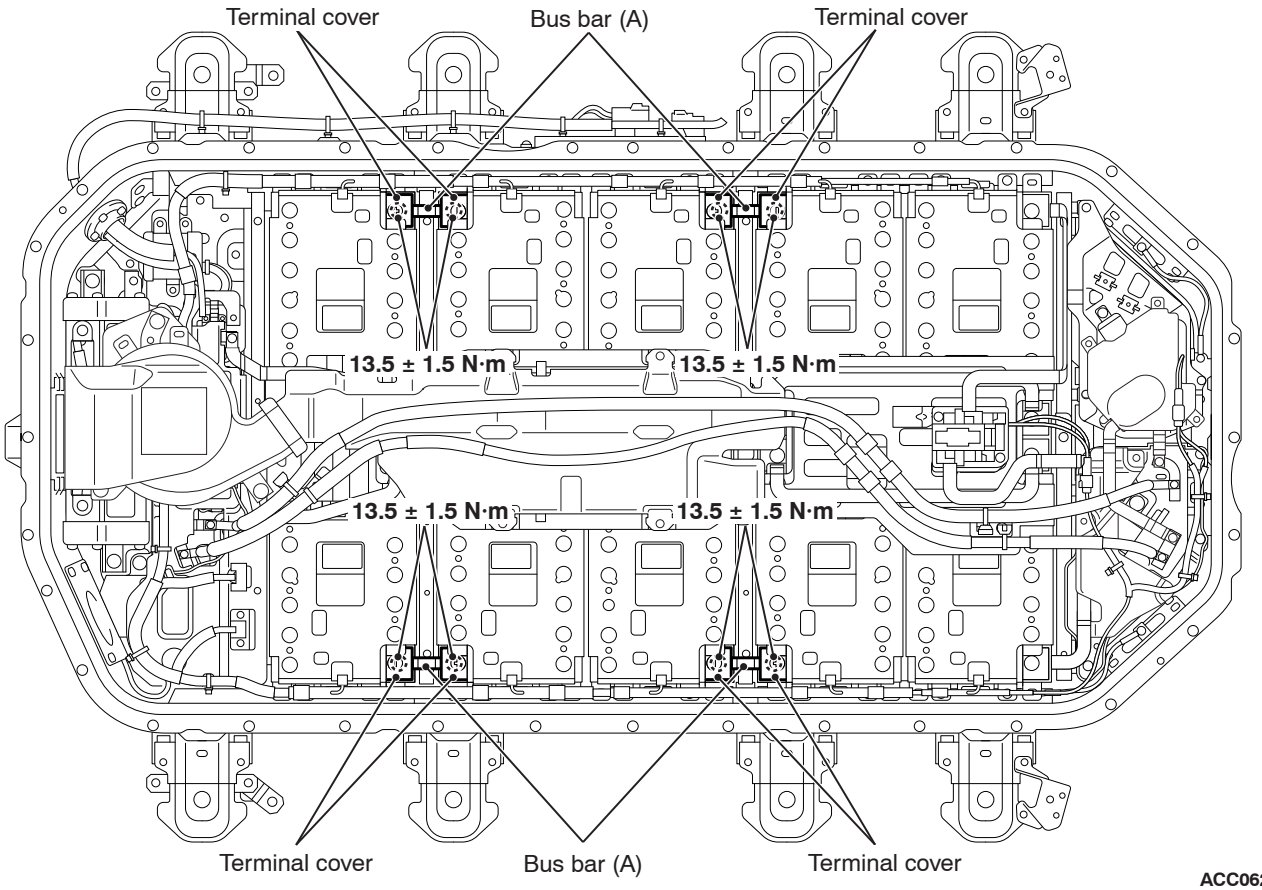

Bus bar (A) removal

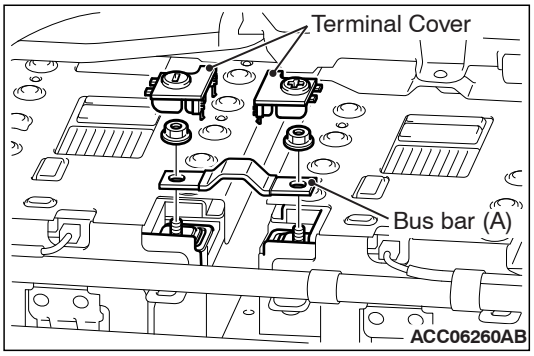

1. Remove the terminal cover.
2. Remove the nuts to remove the bus bar (A).

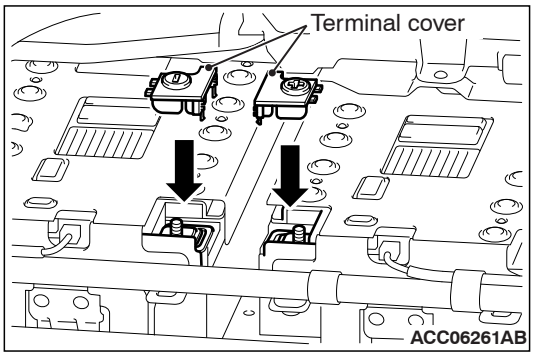

3. Install the terminal cover as shown.

Bus bar (A) installation

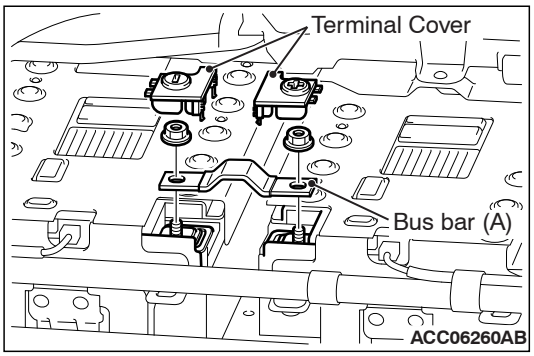

1. Remove the terminal cover.
2. Install the bus bar (A) and tighten the nuts as shown to the specified torque.
3. Install the terminal cover as shown.

3. JFB cable (P and N lines) and battery cooling duct removal and installation

M1549460300036

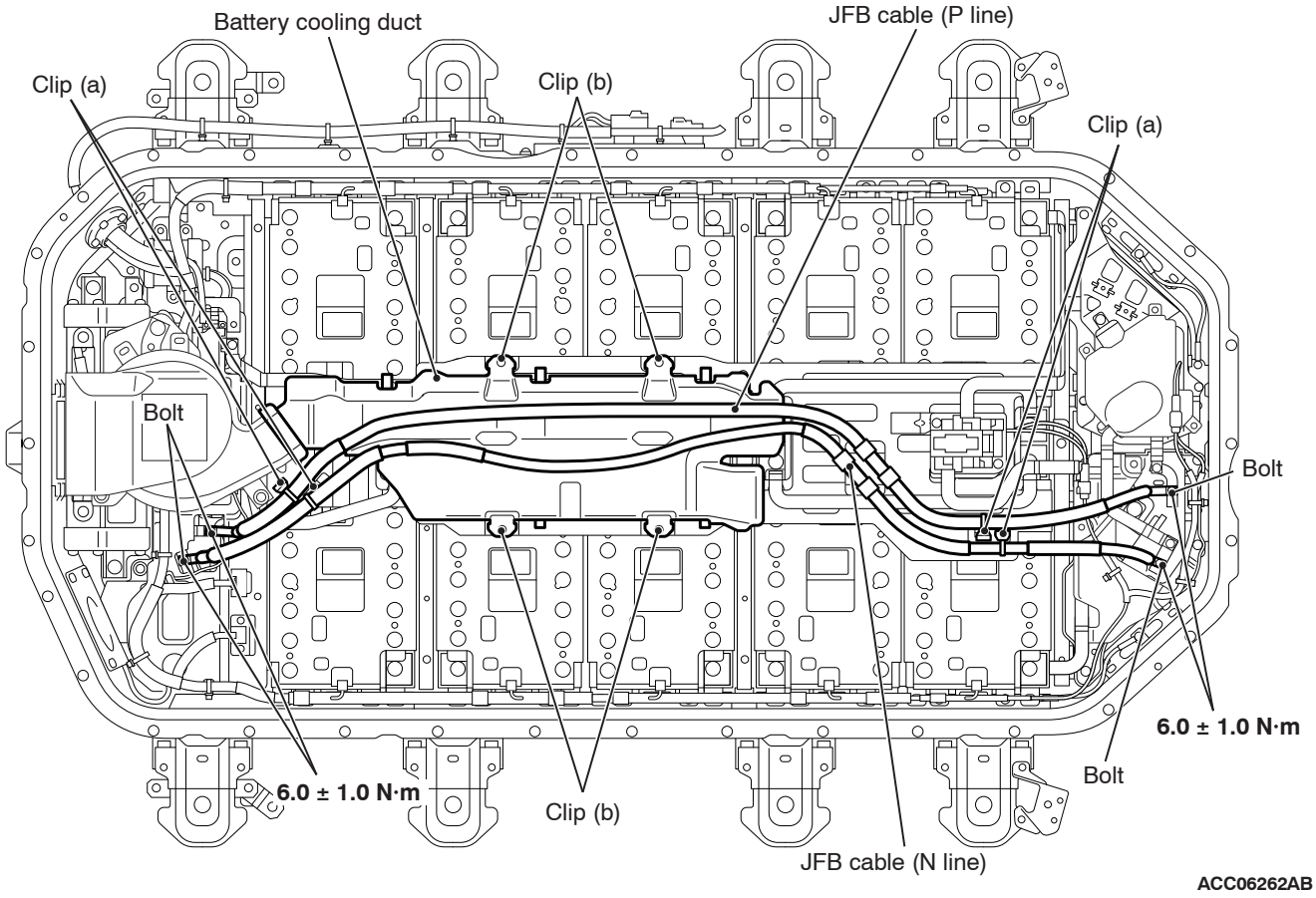

JFB cable (P and N lines) and battery cooling duct removal

1. Remove the bolts as shown.
2. Disengage the clips (a) as shown, and remove the JFB cables (P and N lines).
3. Disengage the clips (b) as shown, and remove the battery cooling duct.

JFB cable (P and N lines) and battery cooling duct installation

1. Install the battery cooling duct and secure it with the clips (b) as shown.
2. Secure the clips (a) to the JFB cables (P and N lines).
3. Install the JFB cables (P and N lines), and tighten the bolts as shown to the specified torque.

4. JFB rear cover (RH) removal and installation <Vehicles with quick-charging system>

M1549460400033

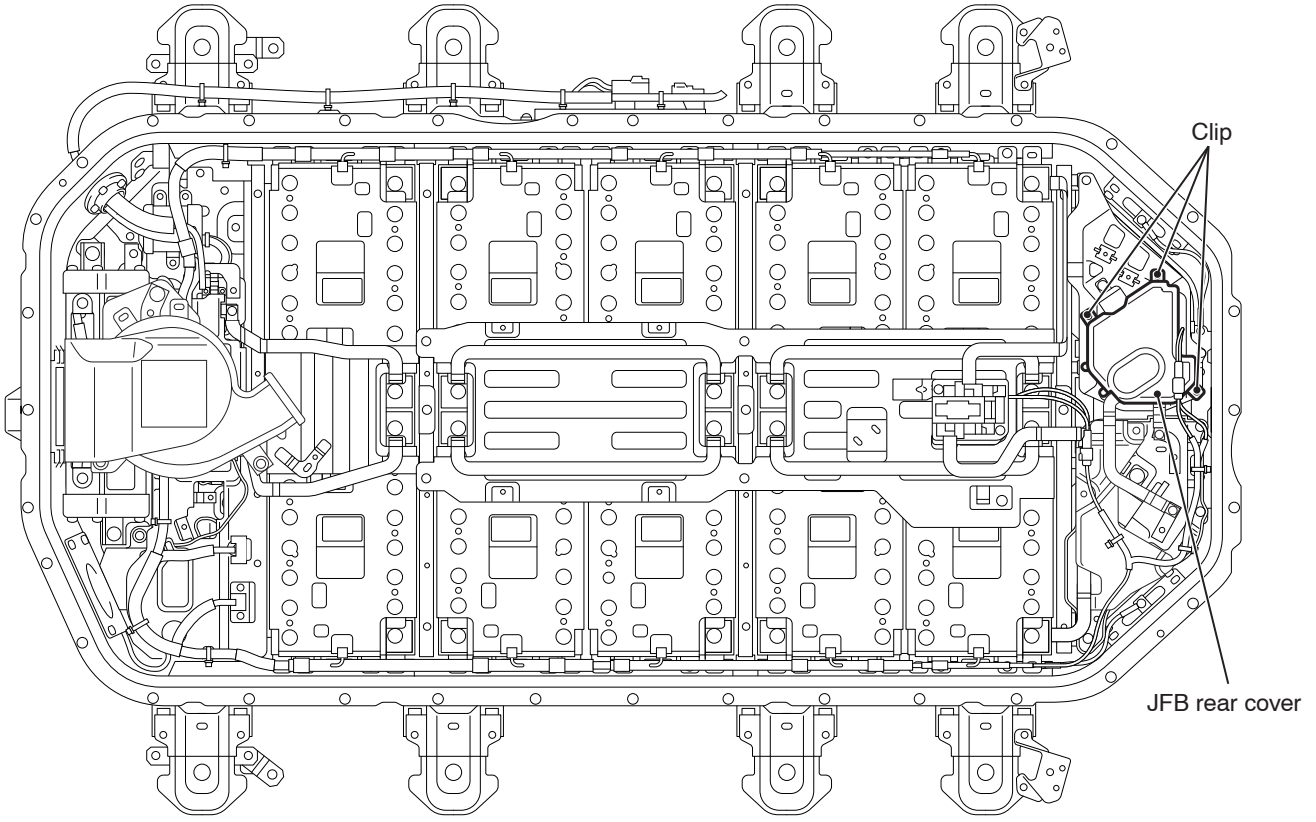

ACC06263AB

JFB rear cover (RH) removal

Disengage the clips as shown to remove the JFB rear cover (RH).

JFB rear cover (RH) installation

Install the JFB rear cover (RH) and then engage the clips shown.

5. JFB rear cover (LH) removal and installation

M1549460500030

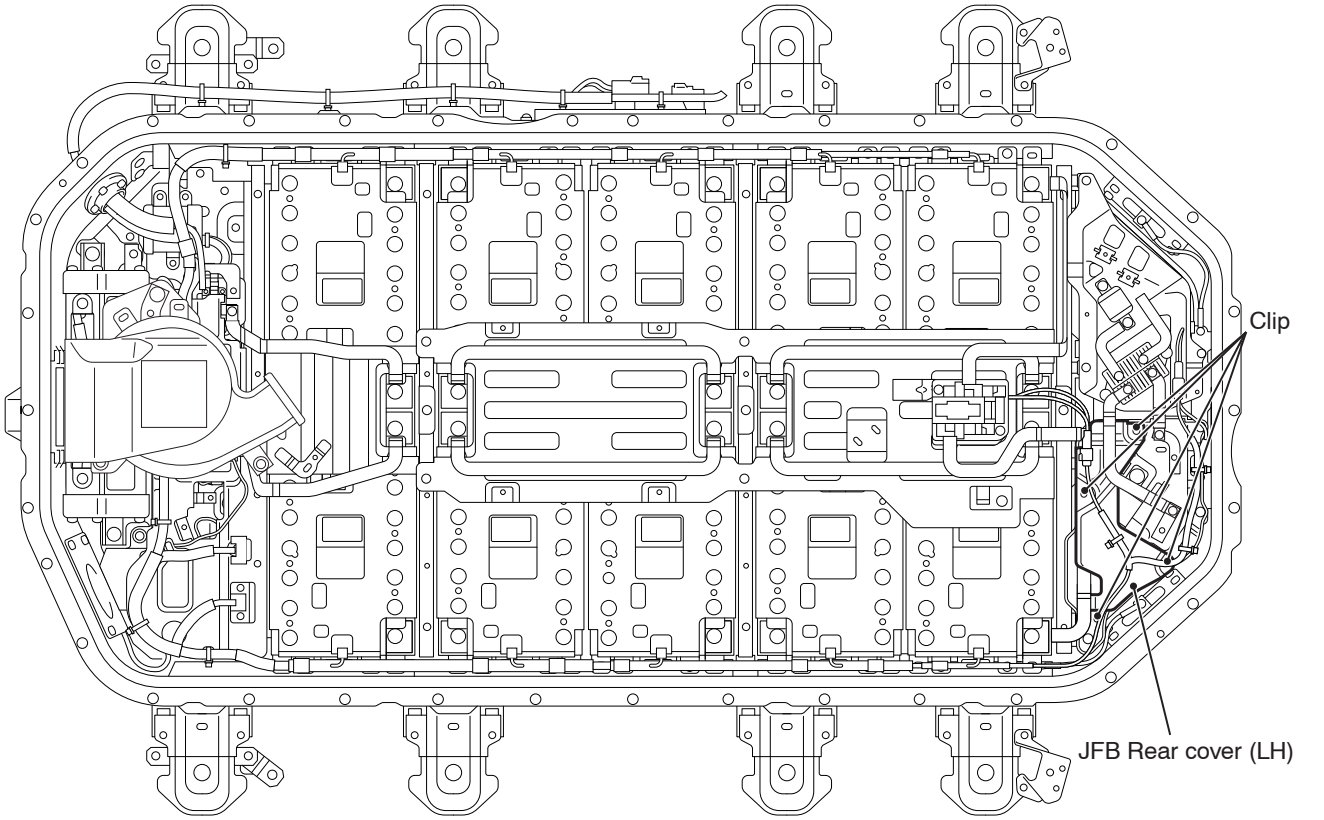

ACC06264AB

JFB rear cover (LH) removal
Disengage the clips as shown to remove the JFB rear cover (LH).

JFB rear cover (LH) installation
Install the JFB rear cover (LH) and then engage the clips as shown.

6. Rear JFB bus bar removal and installation

M1549460600037

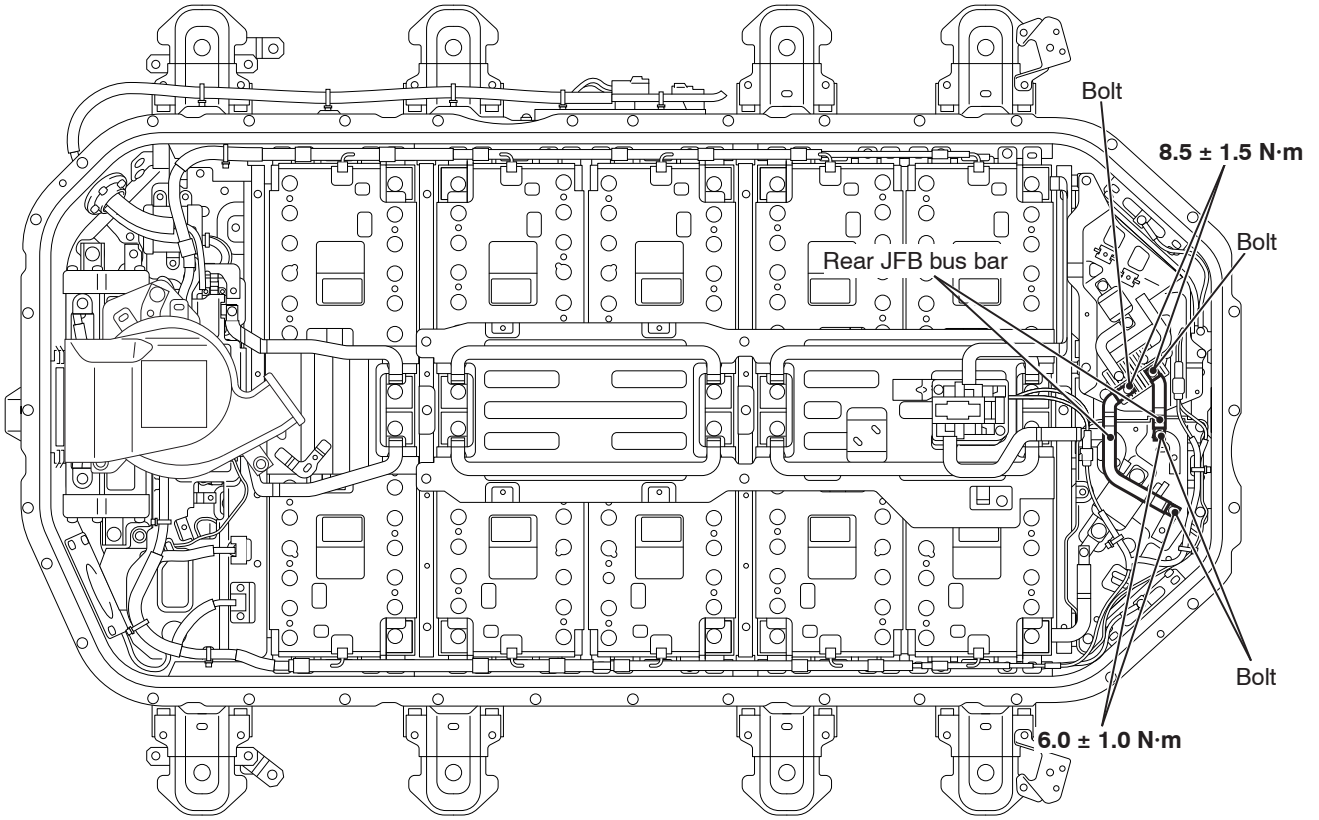

ACC06265AB

Rear JFB bus bar removal

Remove the bolts as shown to remove the rear JFB bus bar.

Rear JFB bus bar installation

Install the rear JFB bus bar and tighten the bolts as shown to the specified torque.

7. Evaporator duct assembly, drive battery cooling fan, drive battery cooling fan bracket removal and installation

M1549460700034

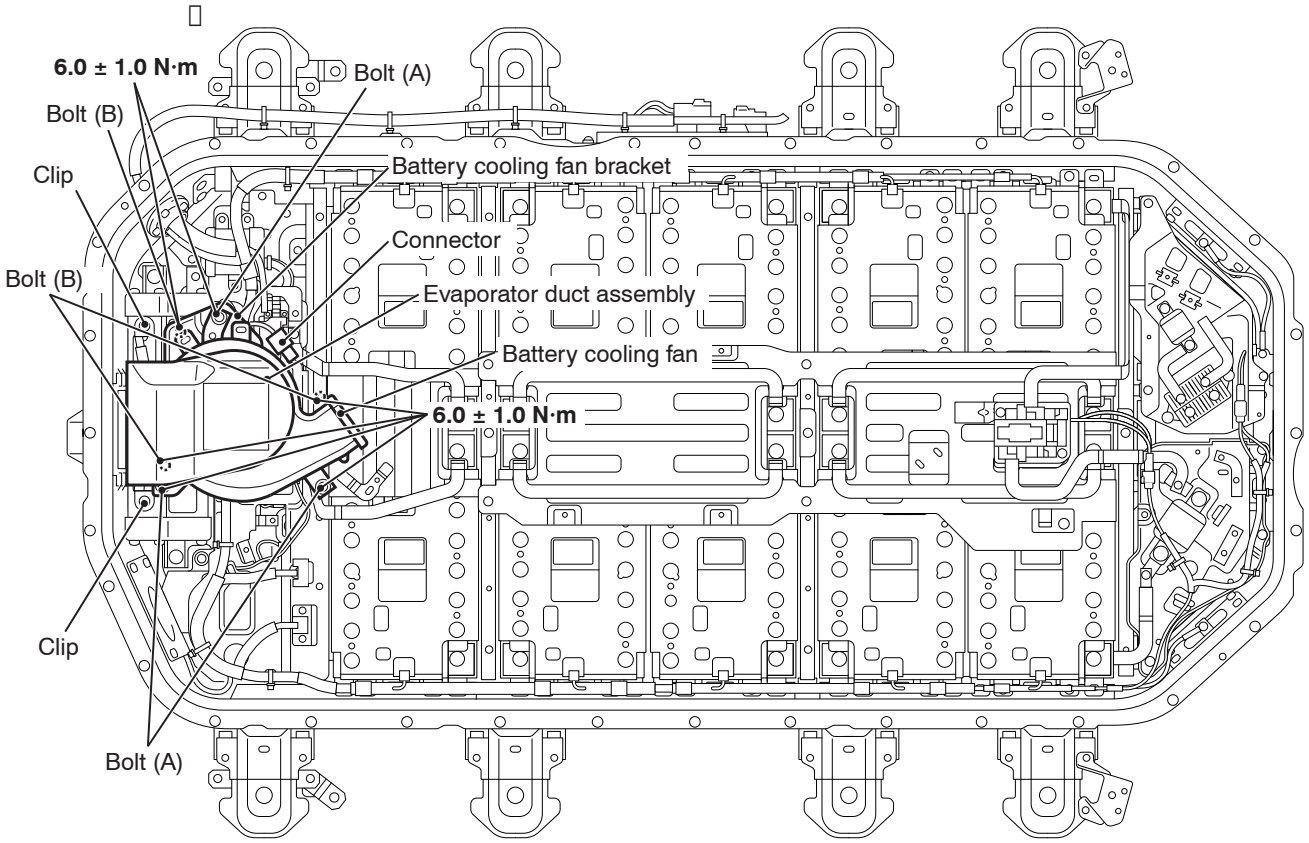

ACC06266AB

Evaporator duct assembly, drive battery cooling fan, drive battery cooling fan bracket removal

1. Disconnect the connector.
2. Disengage the clips and remove the evaporator duct assembly.
3. Remove the bolts (A) as shown and remove the drive battery cooling fan.
4. Remove the bolts (B) as shown and remove the drive battery cooling fan bracket.

Evaporator duct assembly, drive battery cooling fan, drive battery cooling fan bracket installation

1. Install the drive battery cooling fan bracket and tighten the bolts (B) as shown to the specified torque.
2. Install the drive battery cooling fan and tighten the bolts (A) as shown to the specified torque.
3. Secure the evaporator assembly with the clips.
4. Connect the connector.

8. Drive battery harness removal and installation

M1549460800042

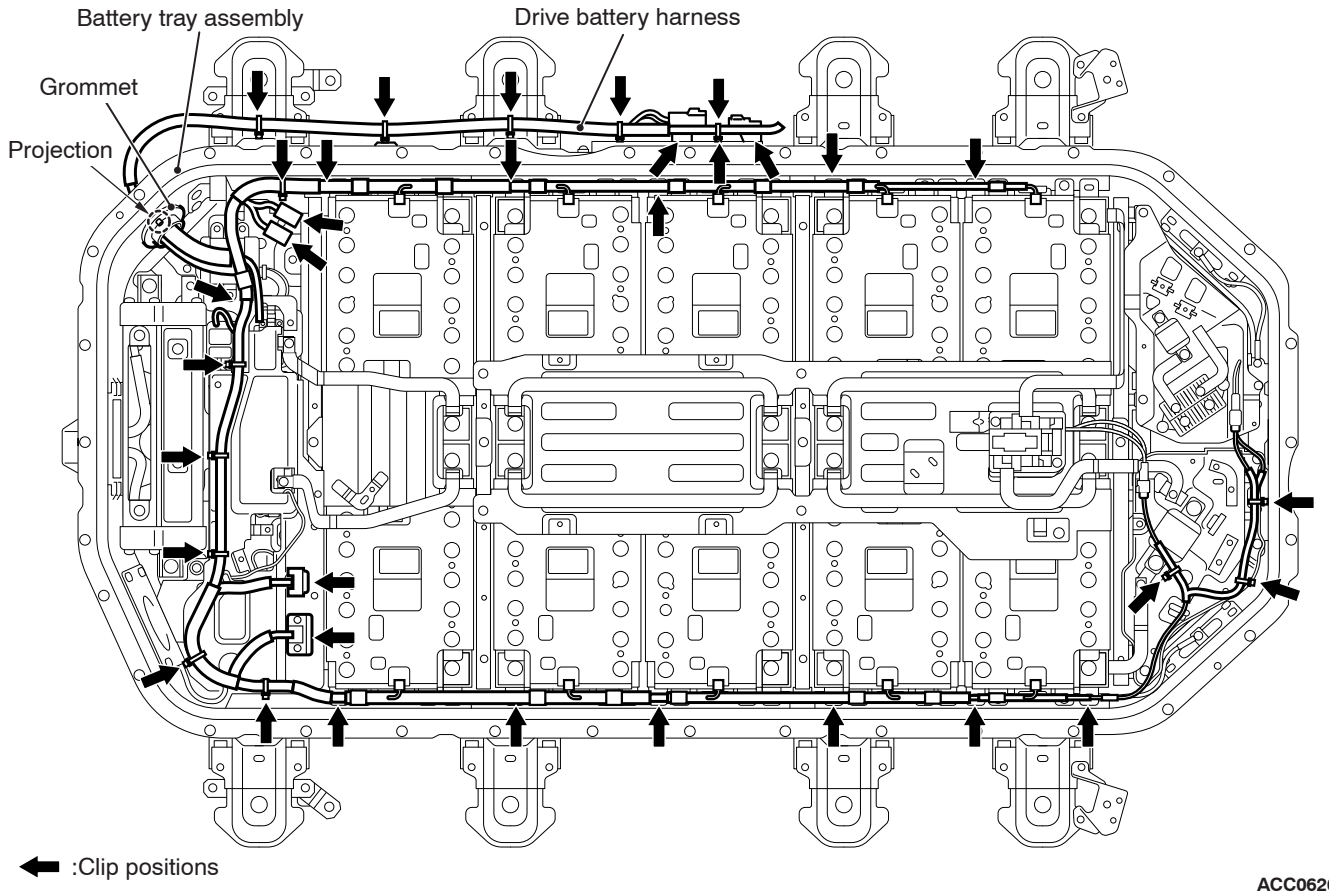

ACC06267AB

Drive battery harness removal

Disengage the clips as shown to remove the drive battery harness.

Drive battery harness installation

⚠ CAUTION

The projection on the grommet should face upwards.

1. Install the grommet for the drive battery harness to the battery tray assembly.
2. Use the clips to secure the drive battery harness to the battery tray assembly.

9. Leakage-of-electricity sensor on drive battery removal and installation

M1549406000059

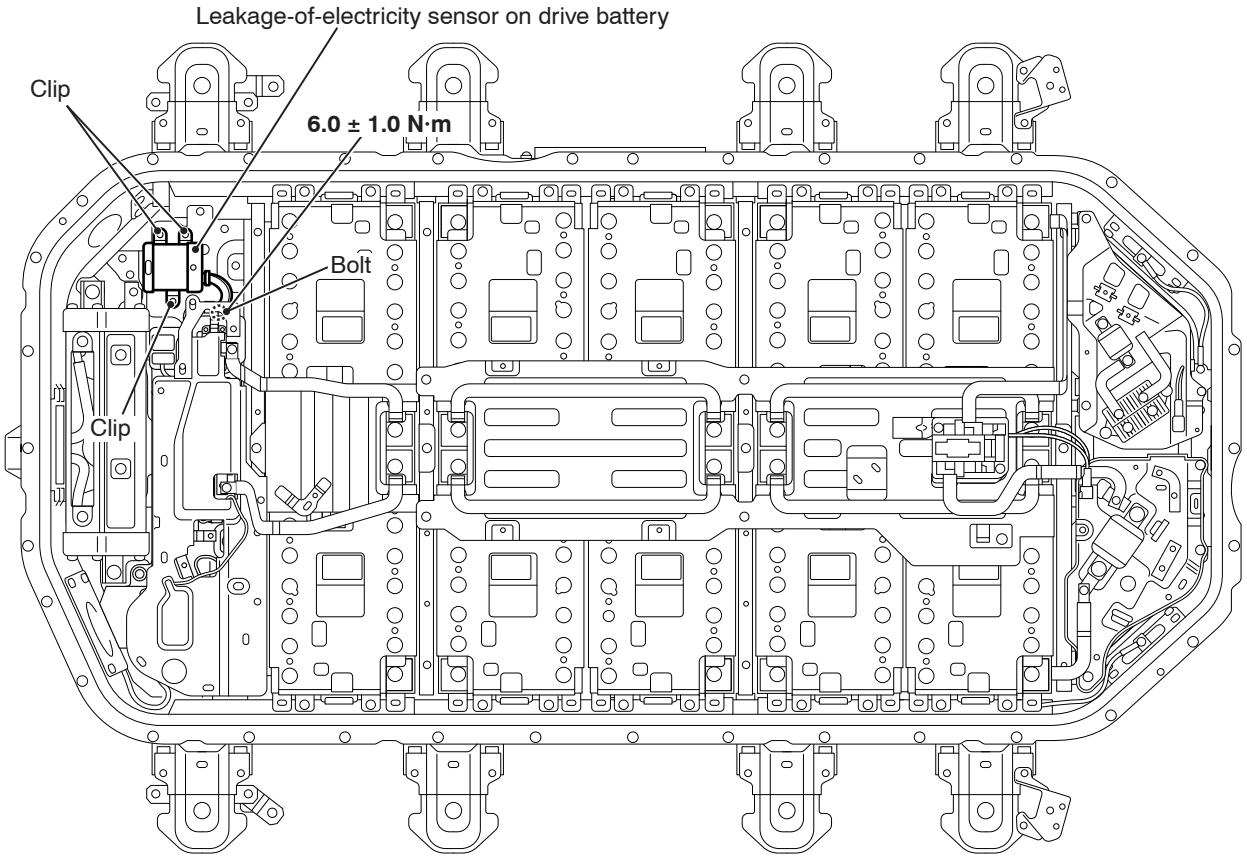

ACC06268AB

Leakage-of-electricity sensor on drive battery removal

Loosen the bolt and clips as shown to remove the leakage-of-electricity sensor on the drive battery.

Leakage-of-electricity sensor on drive battery installation

Clip the leakage-of-electricity sensor and tighten the bolt as shown to the specified torque.

10. Service plug assembly removal and installation

M1549460900049

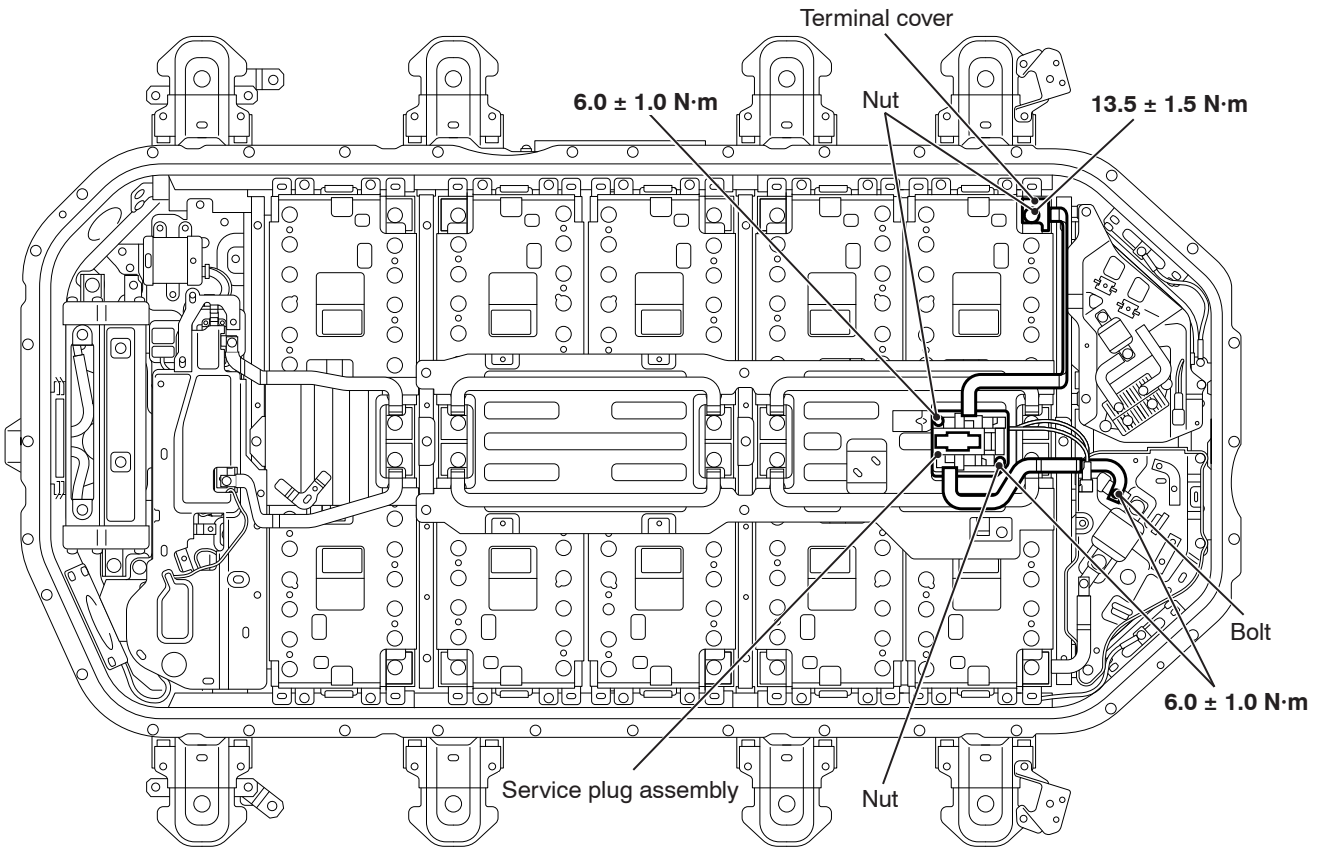

ACC06768AB

Service plug assembly removal

1. Remove the terminal cover.
2. Remove the nuts and bolts as shown to remove the service plug assembly.
3. Install the terminal cover.

Service plug assembly installation

1. Remove the terminal cover.
2. Install the service plug assembly, and tighten the nuts and bolts as shown to the specified torque.
3. Install the terminal cover.

11. Bus bar (F, H) removal and installation

M1549461000049

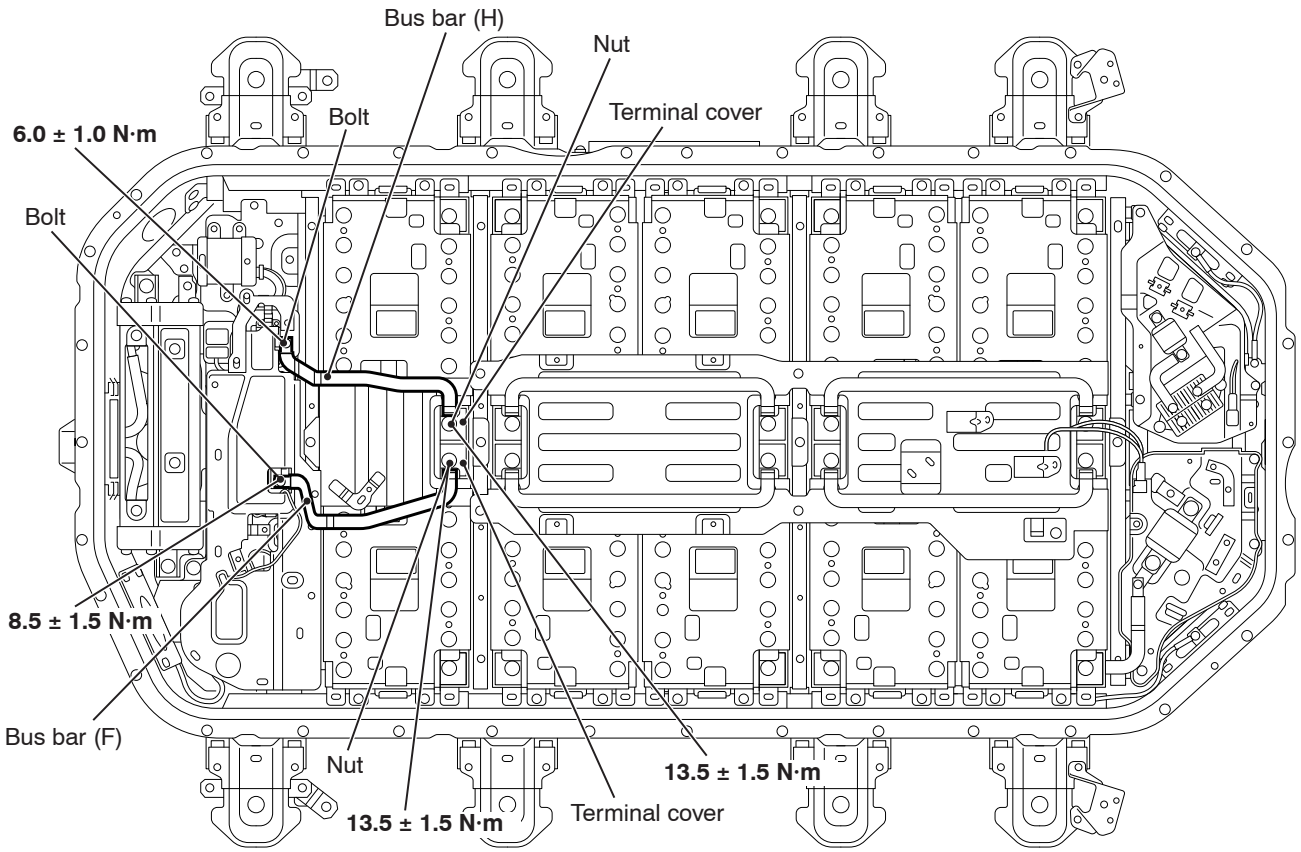

ACC06270AB

Bus bar (F, H) removal

1. Remove the terminal cover.
2. Remove the nuts and bolts as shown to remove the bus bars (F, H).
3. Install the terminal cover.

Bus bar (F, H) installation

1. Remove the terminal cover.
2. Install the bus bars (F, H), and tighten the nuts and bolts as shown to the specified torque.
3. Install the terminal cover.

12. Bus bar (C) removal and installation

M1549461100046

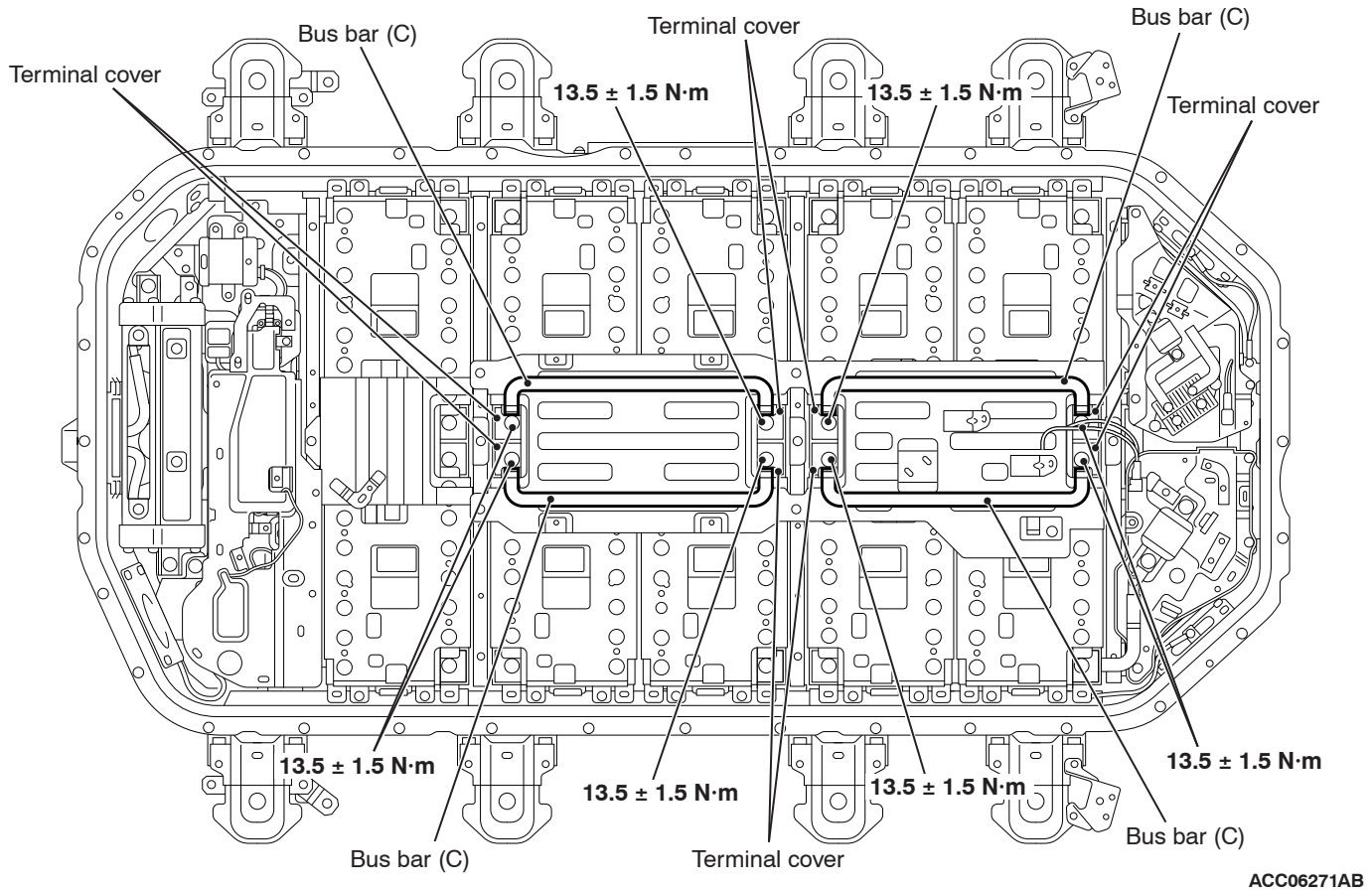

Bus bar (C) removal

1. Remove the terminal cover.
2. Remove the nuts as shown to remove the bus bar (C).
3. Install the terminal cover.

Bus bar (C) installation

1. Remove the terminal cover.
2. Install the bus bar (C) and tighten the nuts as shown to the specified torque.
3. Install the terminal cover.

13. Rear JFB assembly (RH), rear JFB bus bar (X, Y, W), contactor removal and installation <Vehicles with quick-charging system>

M1549461200043

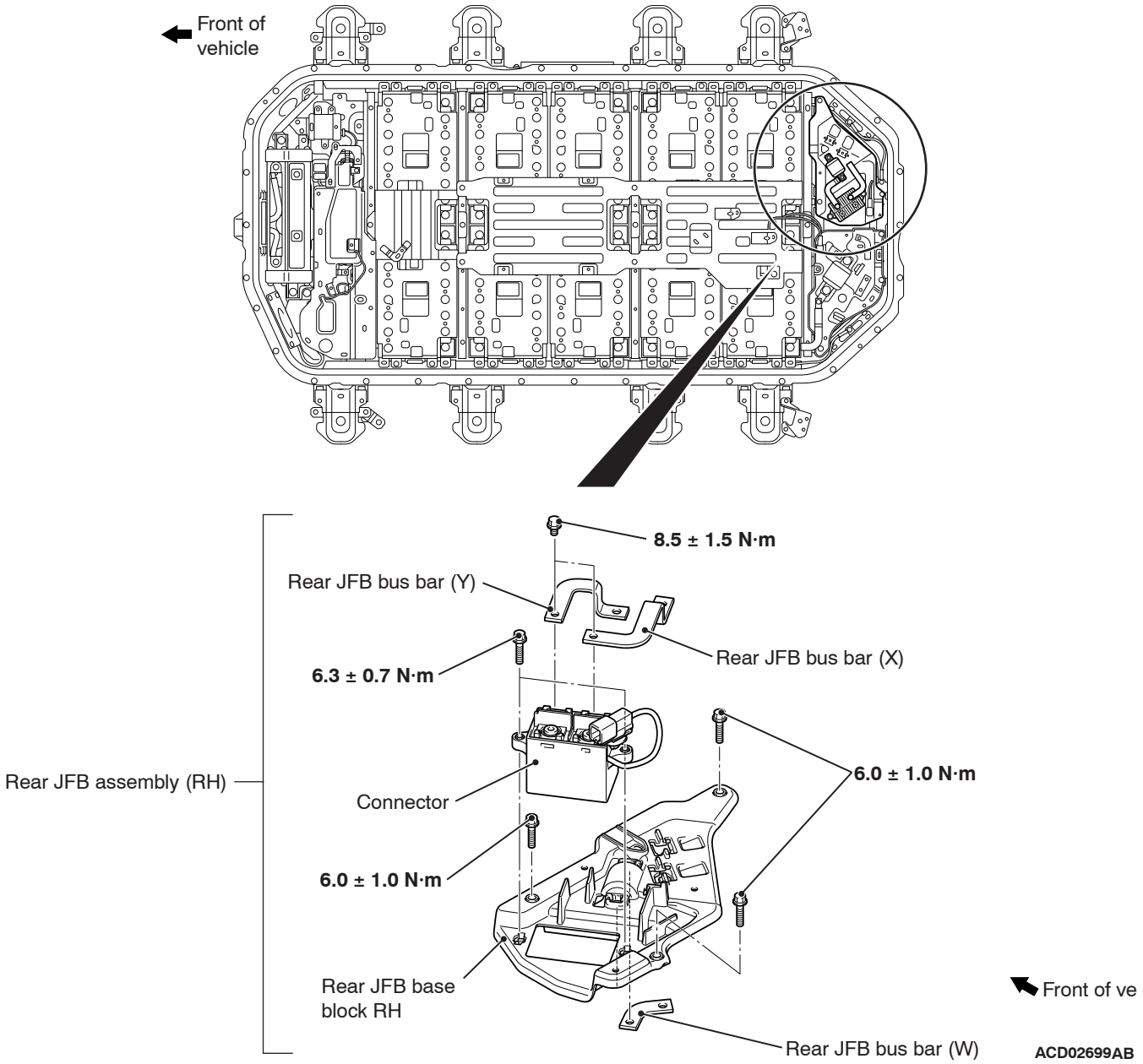

Rear JFB assembly (RH) removal

1. Remove the bolts as shown to remove the rear JFB assembly (RH).
2. Remove the rear JFB bus bar (W).
3. Remove the bolts as shown to remove the rear JFB bus bars (X, Y).
4. Remove the bolts as shown to remove the contactor.

Rear JFB assembly (RH) installation

1. Install the contactor and tighten the bolts as shown to the specified torque.
2. Install the rear JFB bus bars (X, Y) and tighten the bolts as shown to the specified torque.
3. Install the rear JFB bus bar (W).
4. Install the rear JFB assembly (RH) and tighten the bolts as shown to the specified torque.

14. Rear JFB assembly (LH), rear JFB bus bar (G, K, J, Z) removal and installation

M1549461300040

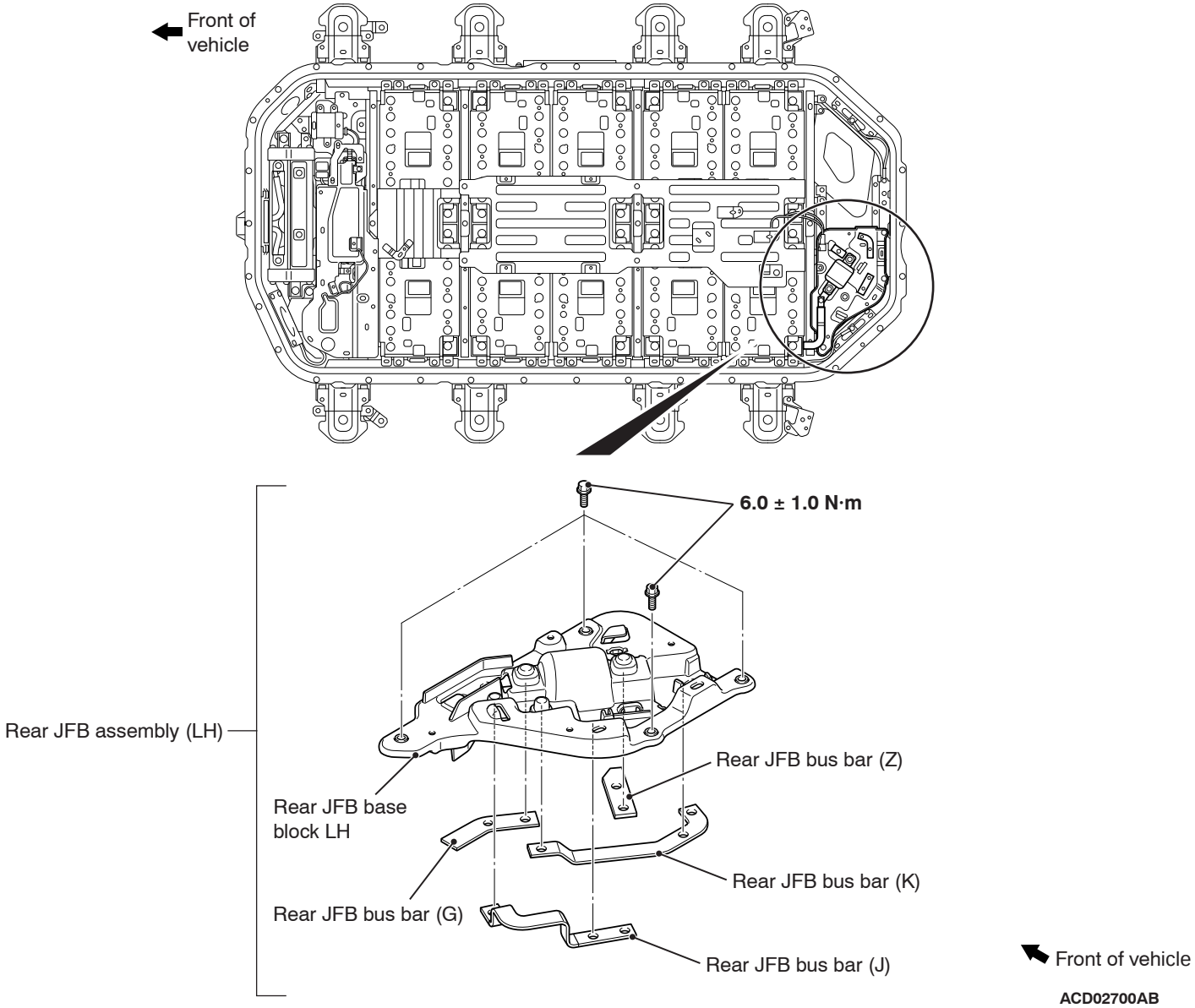

Rear JFB assembly (LH), JFB bus bar (G, K, J, Z) removal

1. Remove the bolts as shown to remove the rear JFB assembly (LH).
2. Remove the JFB bus bars (G, K, J, Z).

Rear JFB assembly (LH), JFB bus bar (G, K, J, Z) installation

1. Install the JFB bus bars (G, K, J, Z).
2. Install the rear JFB assembly (LH) and tighten the bolts as shown to the specified torque.

15. JFB cover removal and installation

M1549461400047

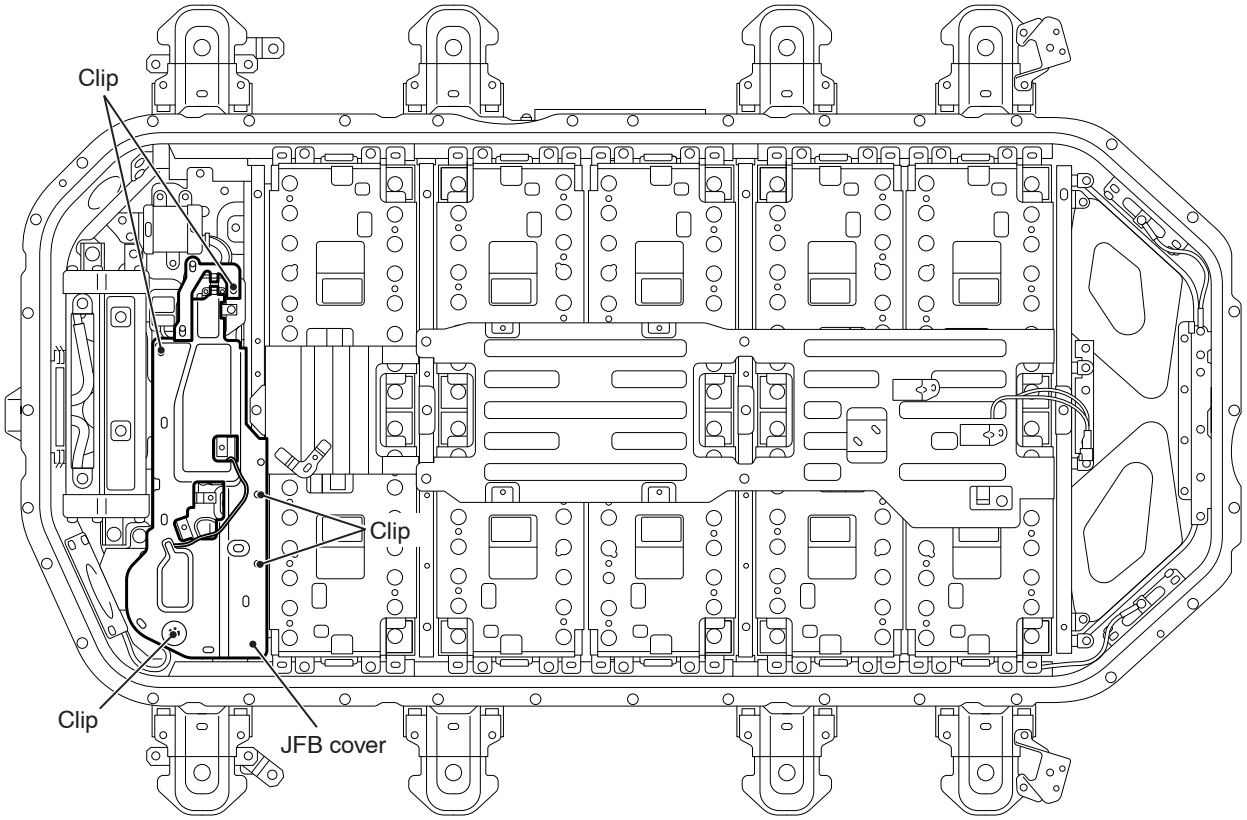

ACC06274AB

JFB cover removal

Disengage the clips as shown to remove the JFB cover.

JFB cover installation

Secure the JFB cover with the clips as shown.

16. Front JFB assembly, JFB bus bar (D, M, N, P, R), electric current sensor, contactor and resistor removal and installation

M1549267600056

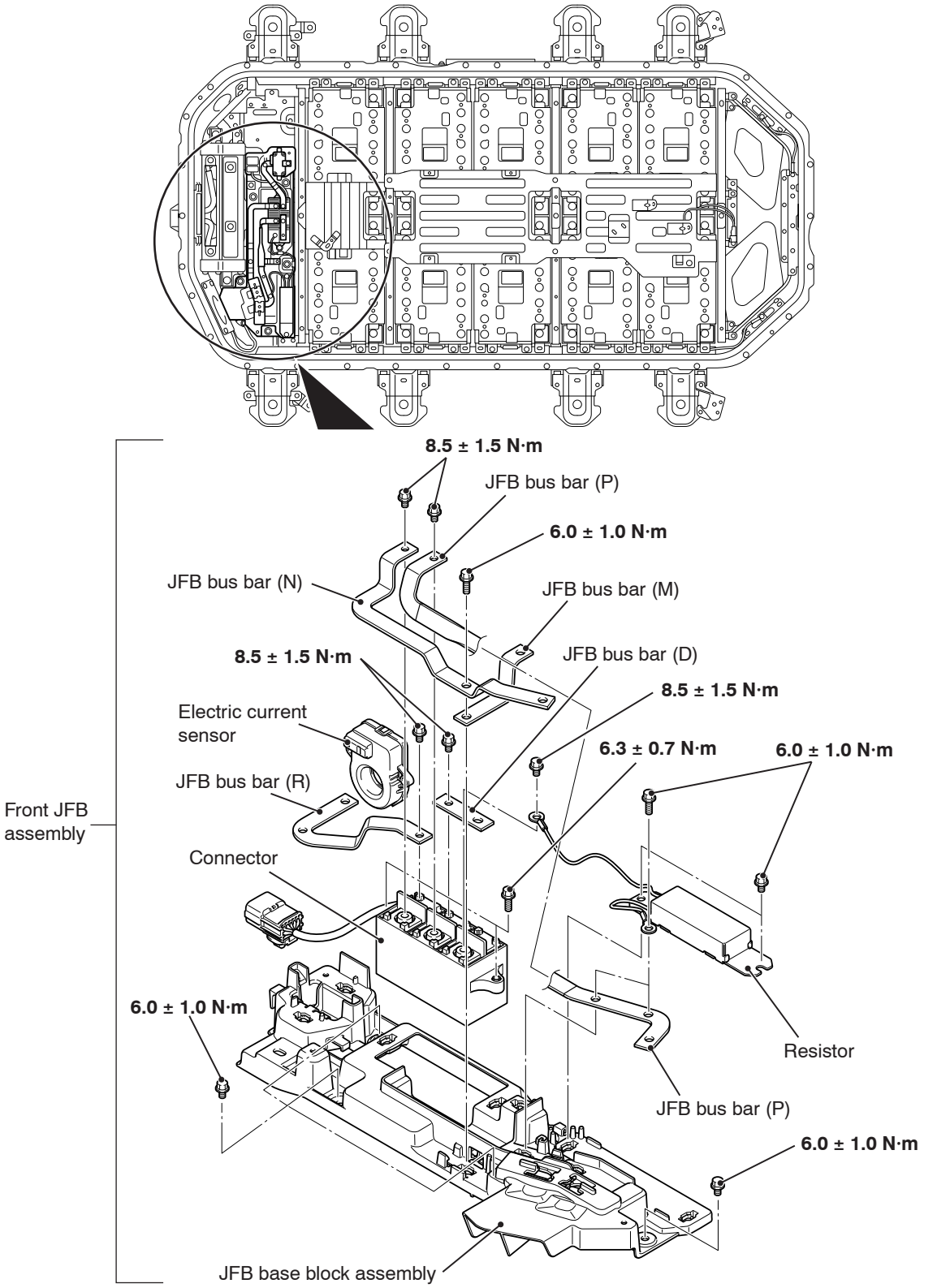

Front JFB assembly, JFB bus bar (D, M, N, P, R), electric current sensor, contactor and resistor removal

1. Remove the bolts as shown to remove the front JFB assembly.

2. Remove the bolts as shown to remove the JFB bus bars (D, M, N, P, R).
3. Remove the electric current sensor.
4. Remove the bolts as shown to remove the contactor.
5. Remove the bolts as shown to remove the resistor.

Front JFB assembly, JFB bus bar (D, M, N, P, R), electric current sensor, contactor and resistor installation

1. Install the resistor and tighten the bolts as shown to the specified torque.
2. Install the contactor and tighten the bolts as shown to the specified torque.
3. Install the electric current sensor.
4. Install the JFB bus bars (D, M, N, P, R), and tighten the bolts as shown to the specified torque.
5. Install the front JFB assembly and tighten the bolts as shown to the specified torque.

17. Evaporator (for cooling the drive battery) removal and installation

M1549461500044

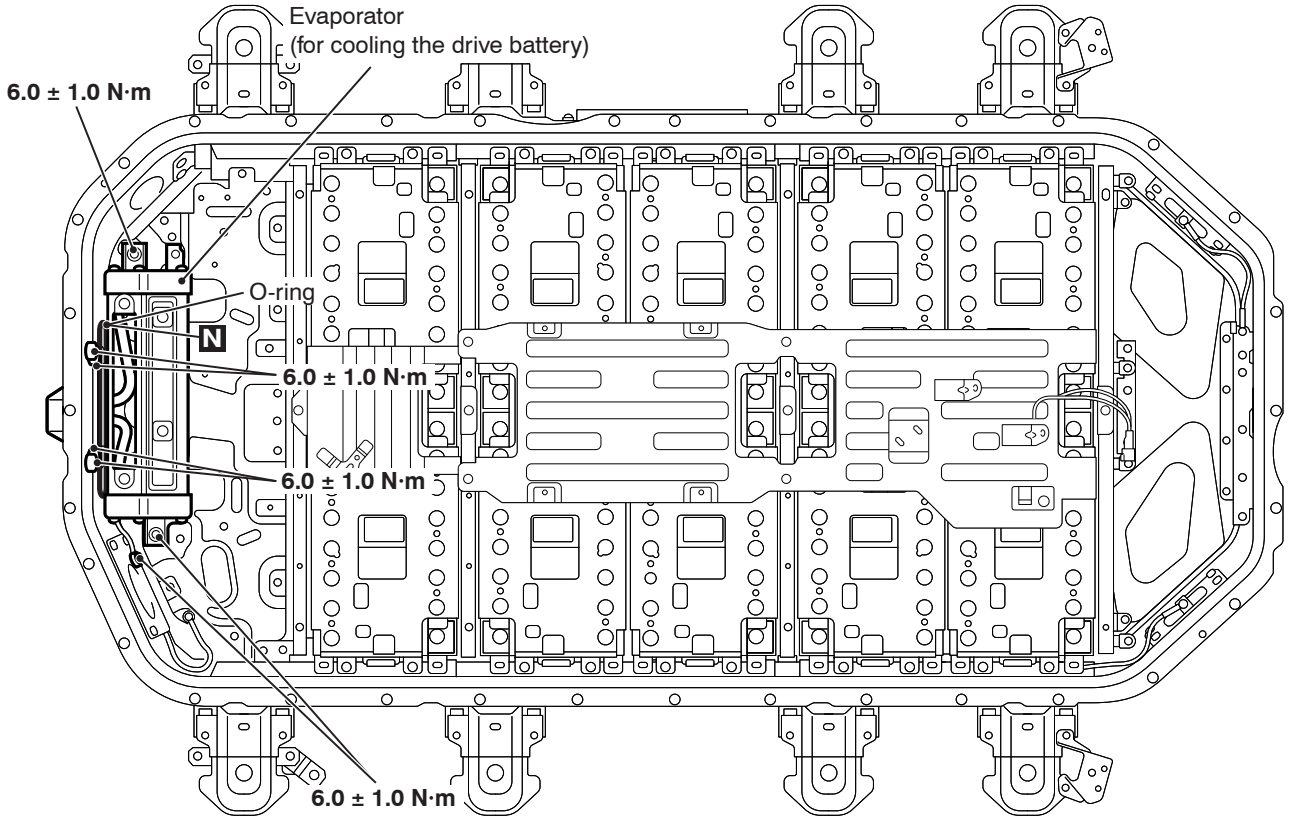

ACC06776AB

Evaporator (for cooling the drive battery) removal

1. Remove the bolts as shown to remove the evaporator (for cooling the drive battery).
2. Remove the O-ring.

Evaporator (for cooling the drive battery) installation

1. Install the O-ring.
2. Install the evaporator (for cooling the drive battery) and tighten the bolts as shown to the specified torque.

18. Battery support holder (A, B, C) removal and installation

M1549461600041

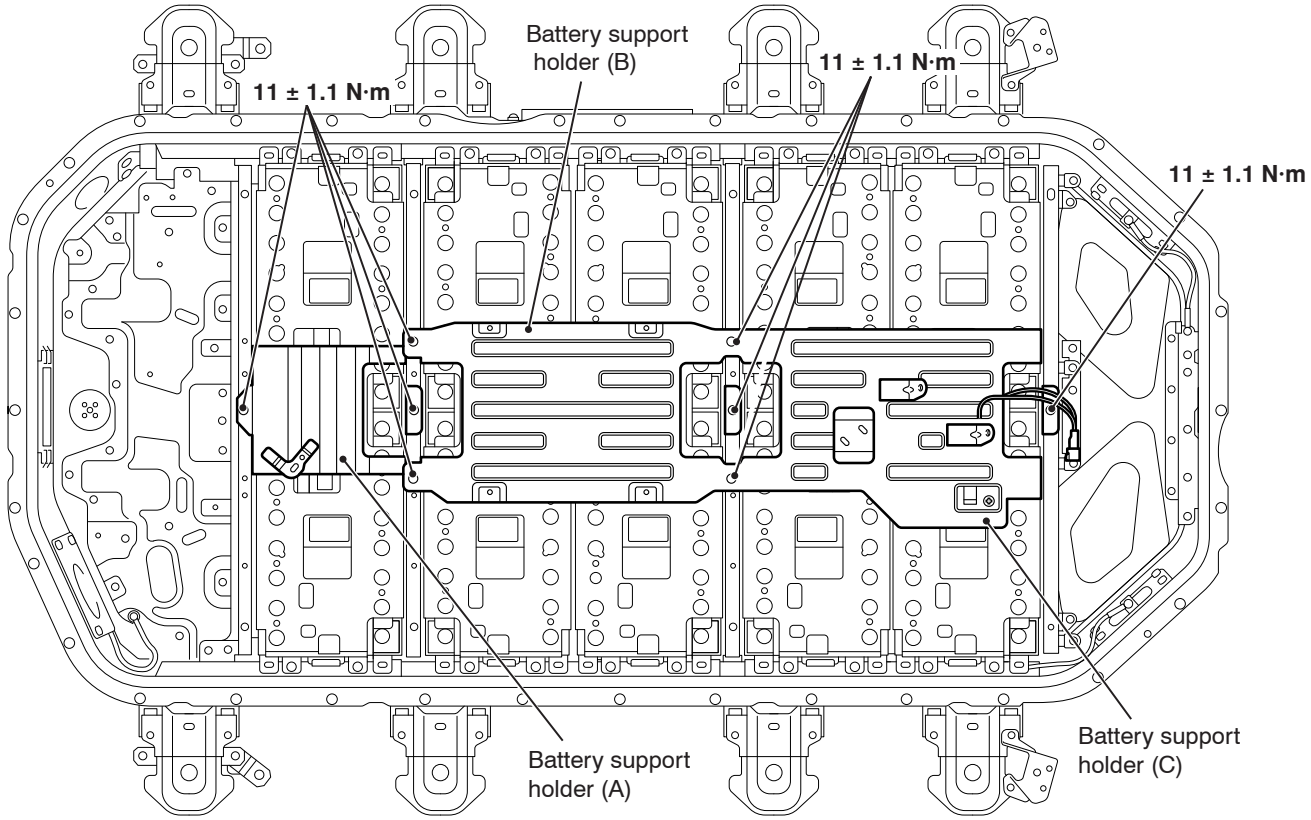

ACC06277AB

Battery support holder (A, B, C) removal
Remove the bolts as shown to remove the battery support holders (A, B, C).

Battery support holder (A, B, C) installation
Install the battery support holders (A, B, C) and tighten the bolts as shown to the specified torque.

19. Battery module assembly removal and installation

M1549461700048

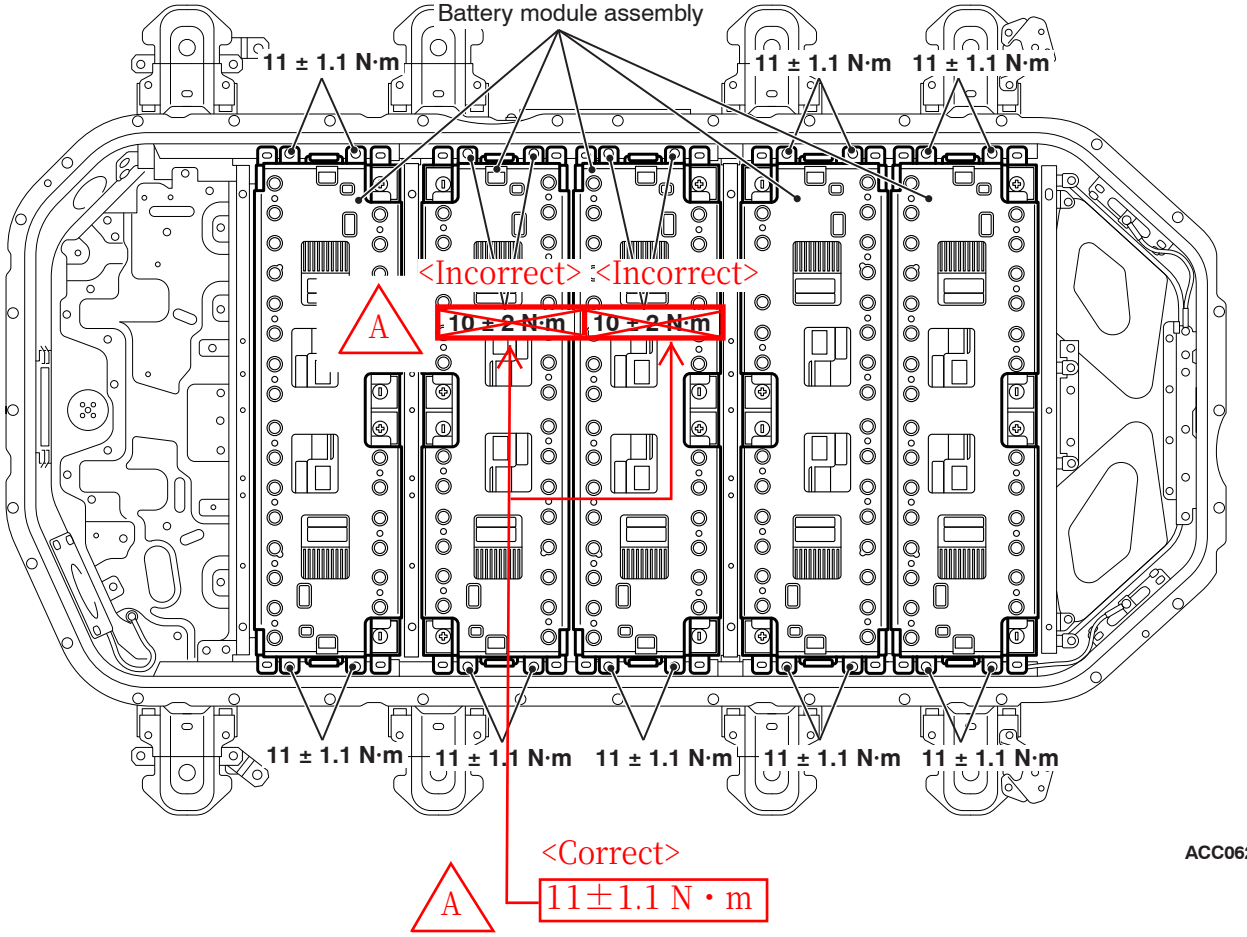

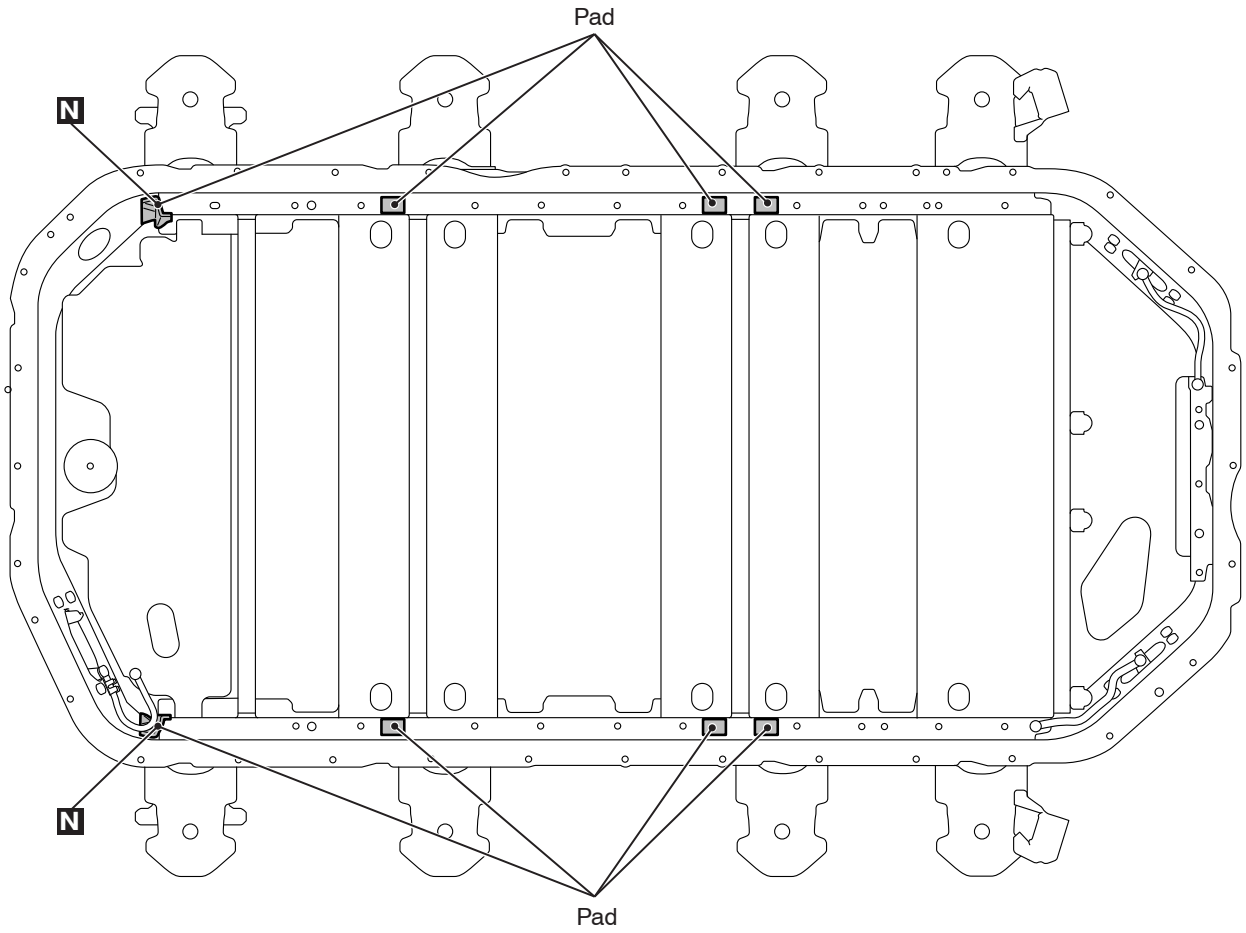

ACD02511AB

Battery module assembly removal

1. Remove the bolts as shown to remove the battery module assembly.
2. Remove the pads.

Battery module assembly installation

<Old>

⚠ CAUTION
The application surface should be free of oil, grease or foreign materials.

1. Install the pads.
2. Install the battery module assembly and tighten the bolts as shown to the specified torque.

<New>

A

Attached sheet 72-1

A <New>

⚠ CAUTION

- **The application surface should be free of oil, grease or foreign materials.**

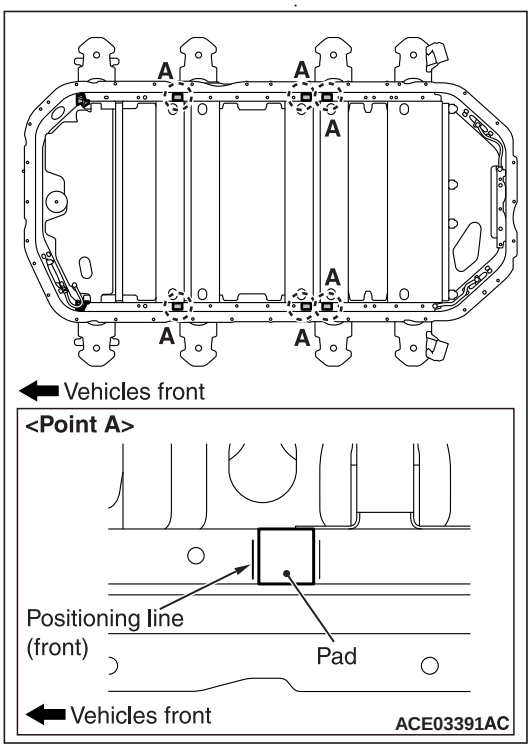

Align the pad at A in the figure with the positioning line (front) to install.

20. Battery upper holder (A) and battery lower holder (A) removal and installation

M1549461800045

Battery upper holder (A) and battery lower holder (A) removal

⚠ CAUTION

- **Be careful not to deform the tab flanges on the battery upper holder (A) and the battery lower holder (A).**
- **Be careful not to damage the tab on the module, which you do not replace.**

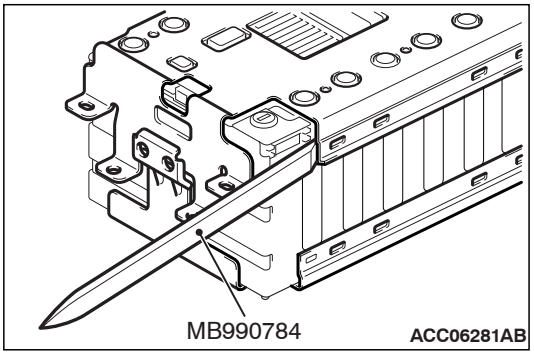

Use the ornament remover (Special tool: MB990784) to remove.

Battery upper holder (A) and battery lower holder (A) installation

⚠ CAUTION

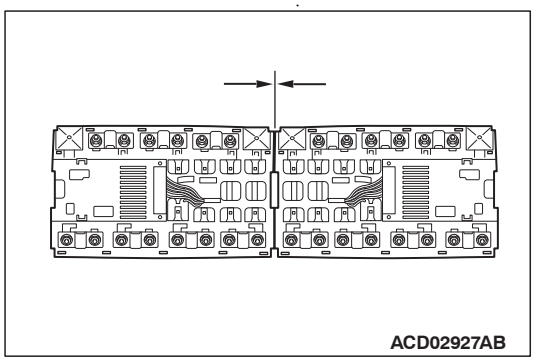

When you install the lithium-ion battery module to the battery lower holder (A), make sure that there is no clearance between the right and left lithium-ion battery modules by pressing them firmly against each other.

- **Make sure that the tabs are engaged firmly.**

1. Install the lithium-ion battery module to the battery lower holder (A).

⚠ CAUTION

Make sure that the tabs are engaged firmly.

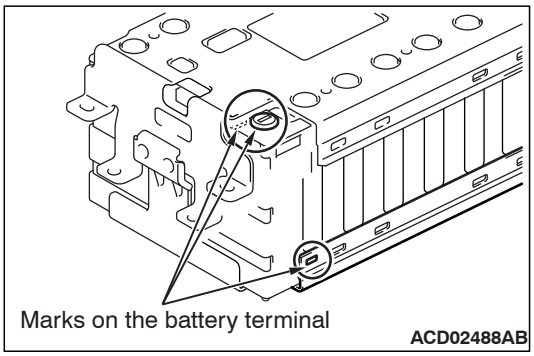

2. Align the marks on the battery terminal cover and the battery module housing with those on the battery lower holder (A).

21. Cell monitoring unit (CMU) removal and installation

M1549461900020

⚠ WARNING

- ***Be careful not to touch electric conductive portions to avoid electric shock.***

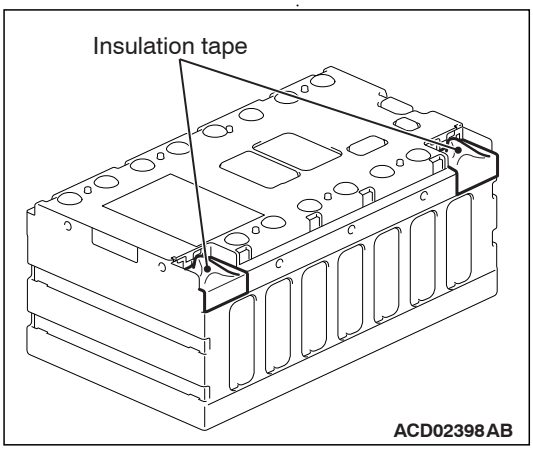

Wrap the output terminals with an insulation tape to avoid electric shock. (Make sure that the cover is not covered with the insulation tape).

- ***Do not drop foreign material in the module as it may cause short circuit.***

⚠ CAUTION

Place the component on a secure and level workbench.

Cover and cell monitoring unit (CMU) removal

Cover removal

⚠ WARNING

- ***Be careful not to touch electric conductive portions to avoid electric shock.***
- ***Do not drop foreign material in the module as it may cause short circuit.***

⚠ CAUTION

Handle the cover carefully to avoid breakage to its small tabs.

NOTE: The following procedure is based on the lithium-ion battery module (B).

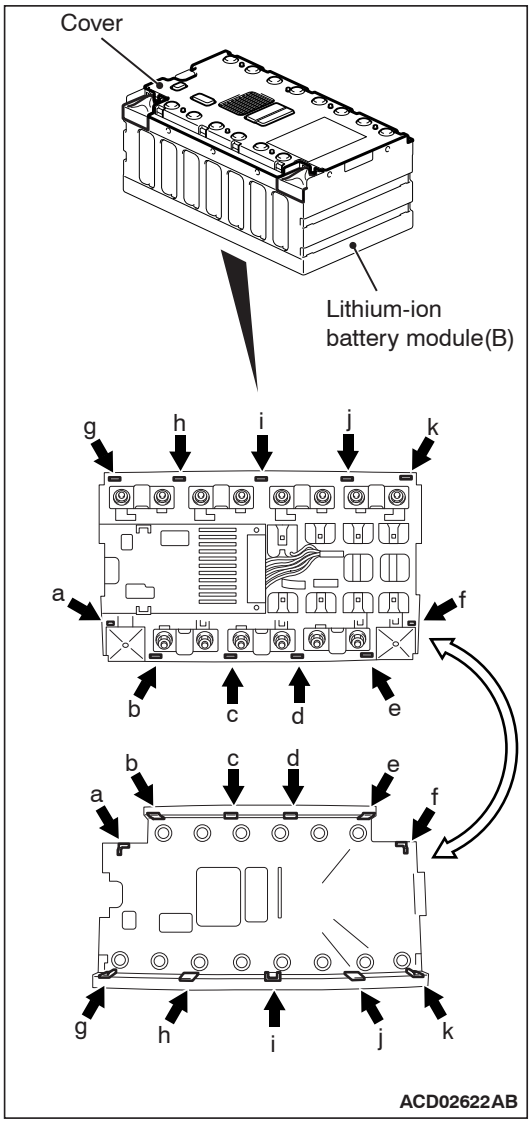

1. The arrows indicate the tabs on the cover.

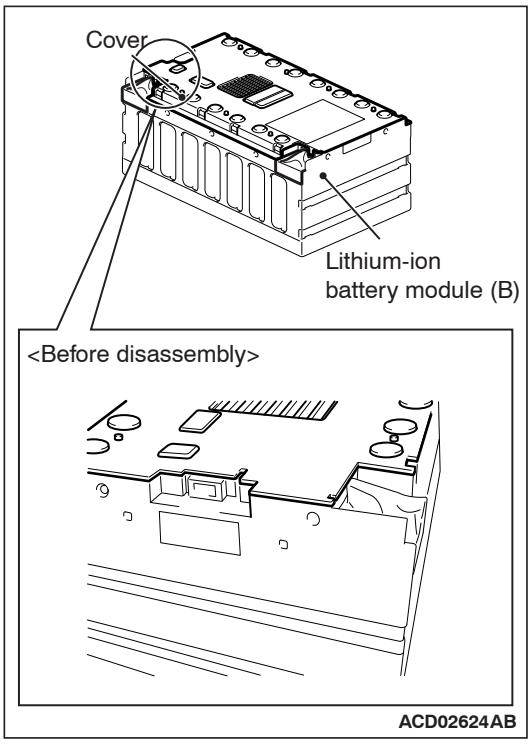

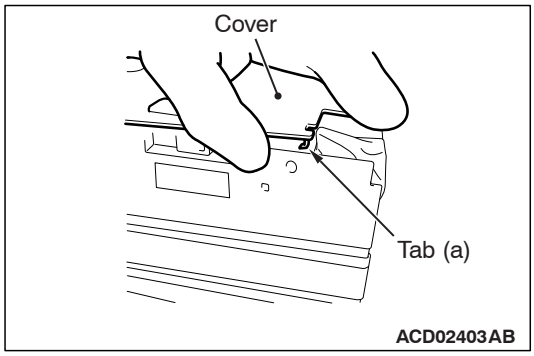

2. Grasp the corners of the cover near the terminal carefully to lift it slowly.

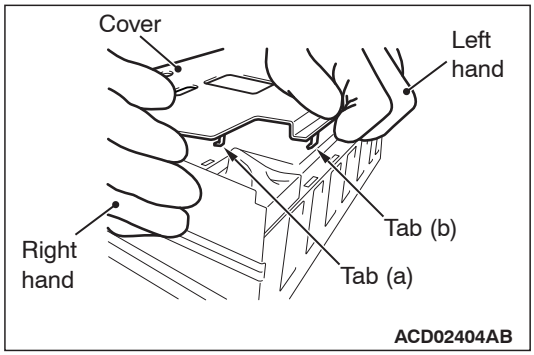

3. Grasp it near the tab (b) with your left hand, and lift to hold the tab (a) near the terminal with your right hand.

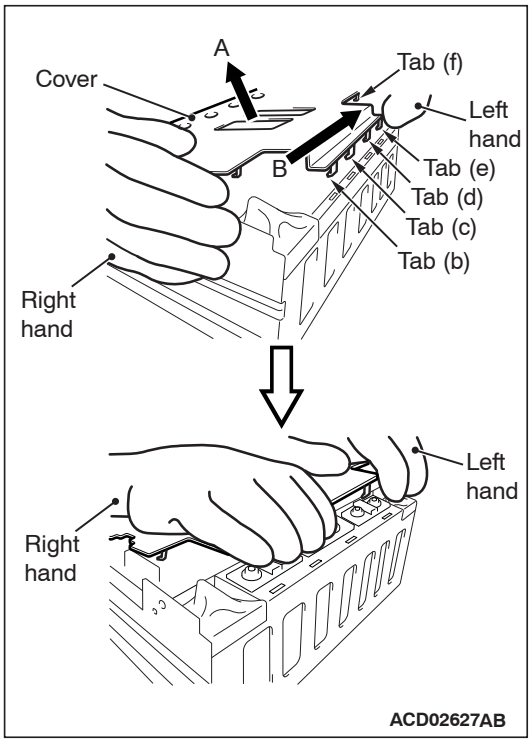

4. Pull it towards the direction of arrow (A) with your right hand, and at the same time disengage the tabs (b) to (f) one at a time towards the direction of arrow (B) with your left hand.

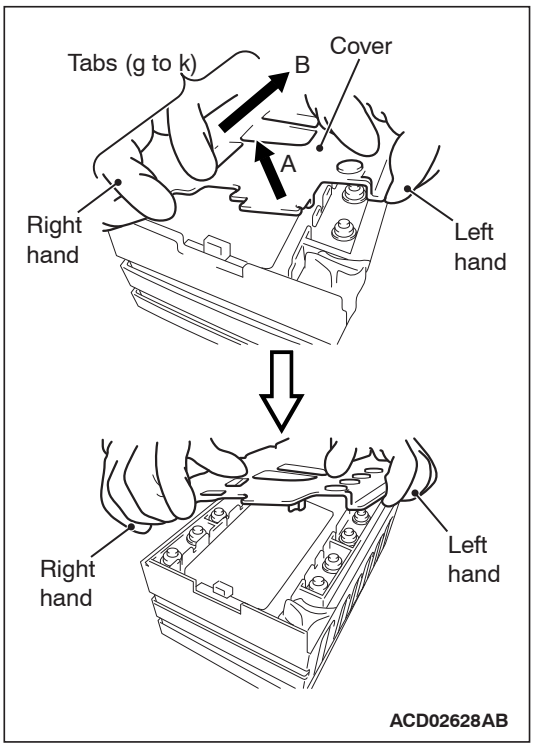

5. Pull it towards the direction of arrow (A) with your left hand, and at the same time disengage the tabs (g) to (k) one at a time towards the direction of arrow (B) with your right hand. Then remove the cover.

Cell monitoring unit (CMU) removal

⚠ WARNING

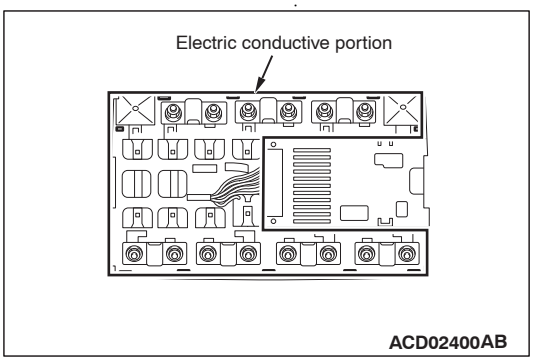

Be careful not to touch electric conductive portions to avoid electric shock.

- ***Do not drop foreign material in the module as it may cause short circuit.***

NOTE: The following procedure is based on the lithium-ion battery module (B).

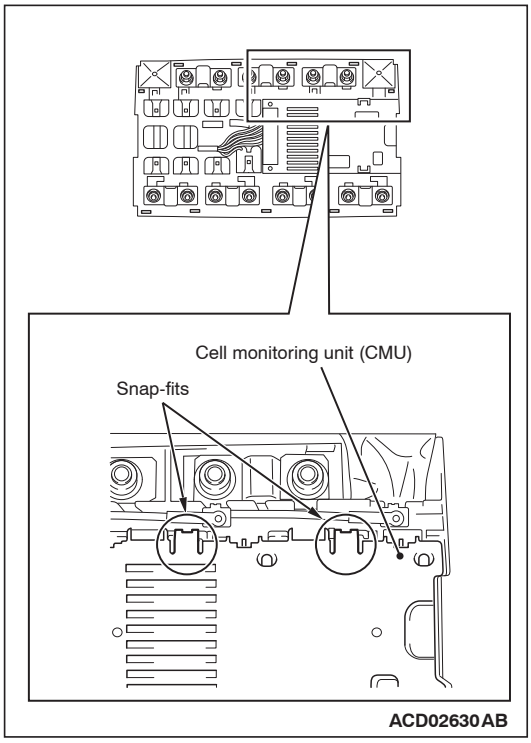

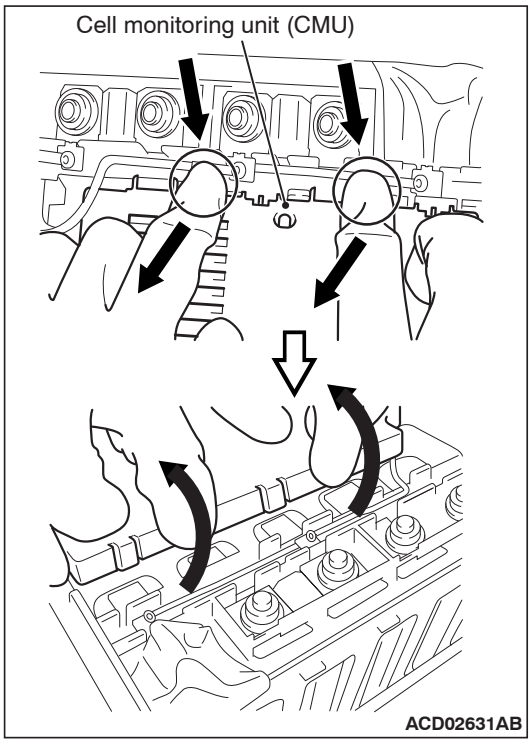

1. Pull out the cell monitoring unit (CMU) while pressing the snap-fits with your index fingers.

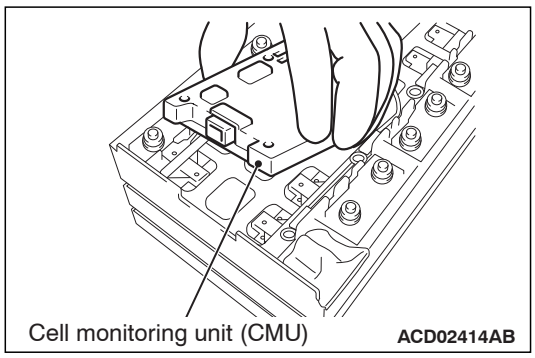

2. Disengage the snap fits on the opposite side to remove the cell monitoring unit (CM) from the lithium-ion battery module (B).

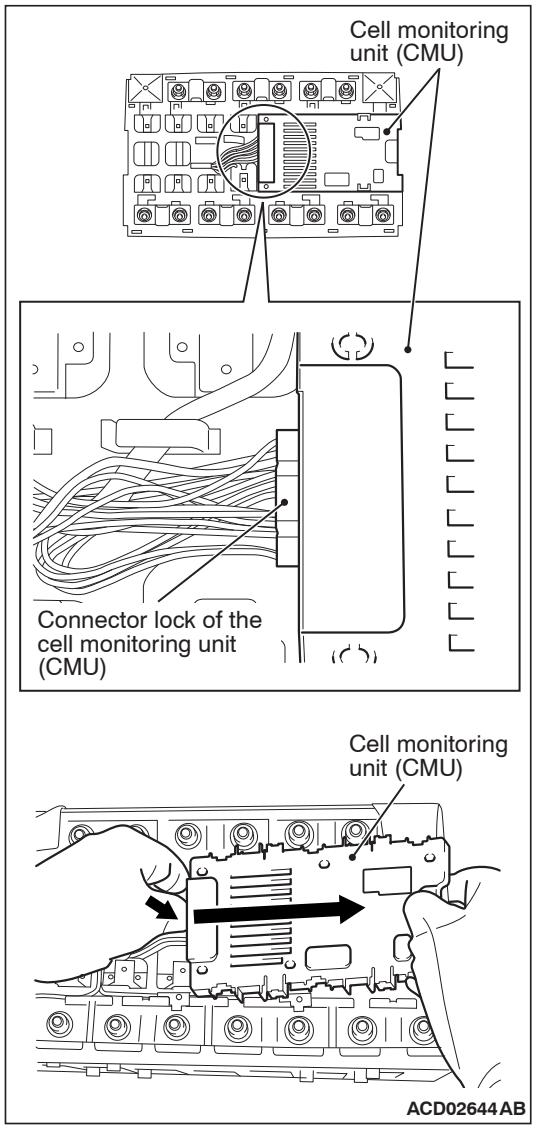

3. Pull out the cell monitoring unit (CMU) with your right hand while pressing the connector lock of the cell monitoring unit (CMU) with your left hand. Then disconnect the connector from the cell monitoring unit (CMU).

Cell monitoring unit (CMU) and cover installation

Cell monitoring unit (CMU) installation

⚠ *WARNING*

- ***Be careful not to touch electric conductive portions to avoid electric shock.***
- ***Do not drop foreign material in the module as it may cause short circuit.***

NOTE: The following procedure is based on the lithium-ion battery module (B).

⚠ *WARNING*

Be careful not to touch electric conductive portions as they are nearby.

⚠ CAUTION

Make sure that the connector is connected securely.

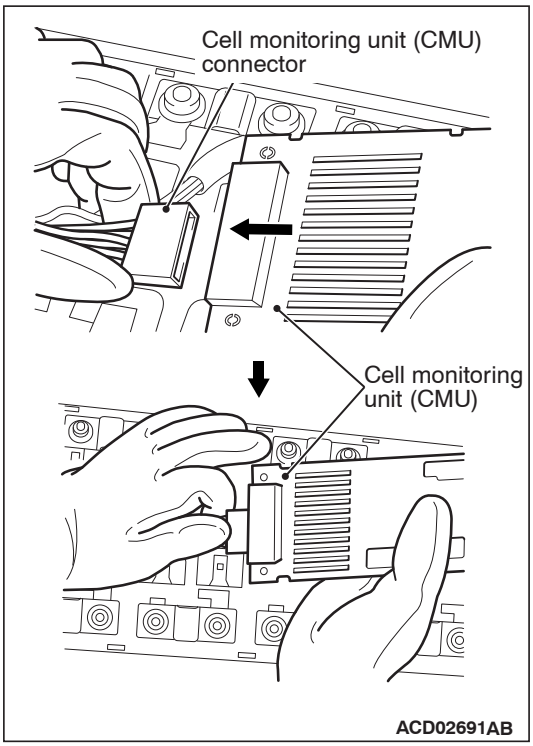

1. Hold the high-voltage side connector with your left hand. Connect the cell monitoring unit (CMU) to the high-voltage side connector with your right hand.

   NOTE:
   - *The connector should be secured until it engages audibly.*
   - *Listen carefully as the connector locking sound is hard to hear.*

⚠ CAUTION

Do not pull the wiring harness wires too strongly as they may be damaged.

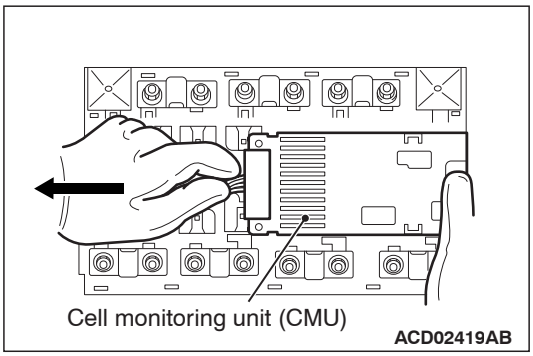

2. Pull back sharply on the wiring harness wires to make sure that the connectors are connected securely.

⚠ CAUTION

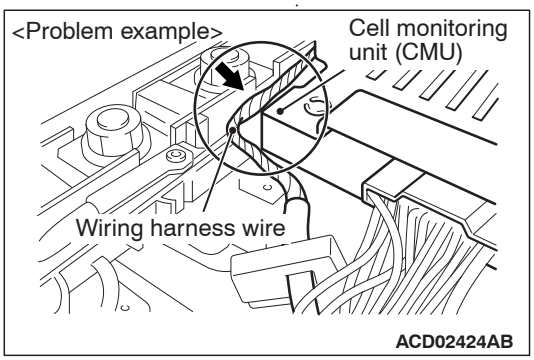

The illustration shows that the cell monitoring unit (CMU) has pinched the wiring harness wire. Be careful not to let the cell monitoring unit (CMU) pinch any wires as it may cause an open or short circuit.

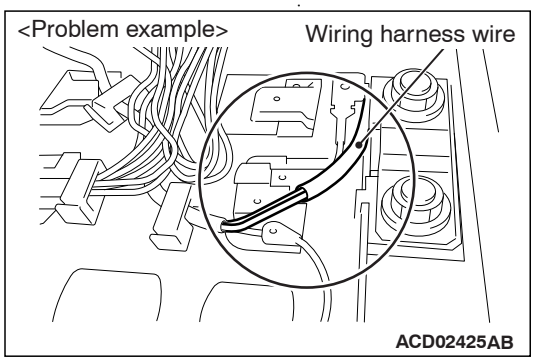

The illustration shows that the wire is not routed in the guide of the intermediate lid. Do not attempt to install the outer lid as it may cause an open or short circuit.

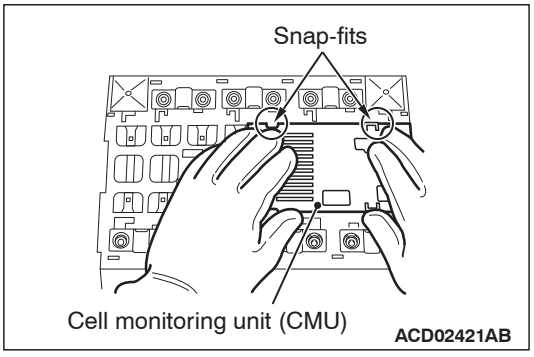

3. Grasp the cell monitoring unit (CMU) with your hands to position the snap-fits correctly.

NOTE:

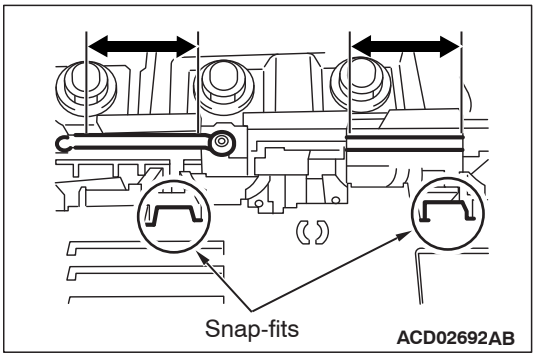

You cannot install the cell monitoring unit (CMU) until you engage the snap-fits on the cell monitoring unit (CMU) within the range indicated by arrows.

⚠ CAUTION

- **Be careful not to pinch the wires.**
- **Make sure that the snap-fits on the cell monitoring unit (CMU) are engaged securely and the cell monitoring unit (CMU) is not adrift.**

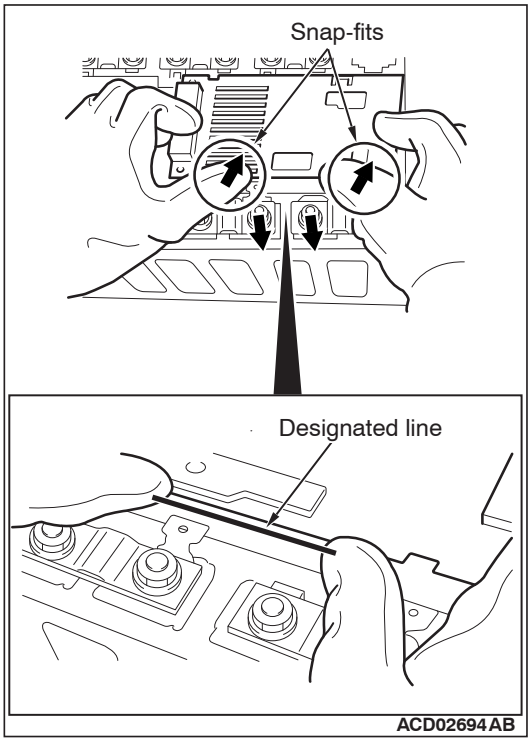

4. Position the cell monitoring unit (CMU) with your hands so that its snap-fits are aligned with the designated line as shown. Insert the cell monitoring unit (CMU) by pressing the snap-fits with your thumbs.

Cover installation

⚠ WARNING

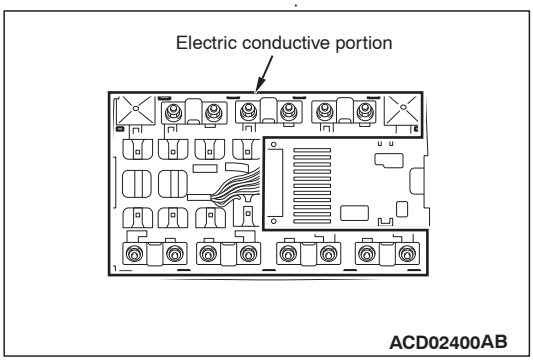

Be careful not to touch electric conductive portions to avoid electric shock.

- ***Do not drop foreign material in the module as it may cause short circuit.***

NOTE: The following procedure is based on the lithium-ion battery module (B).

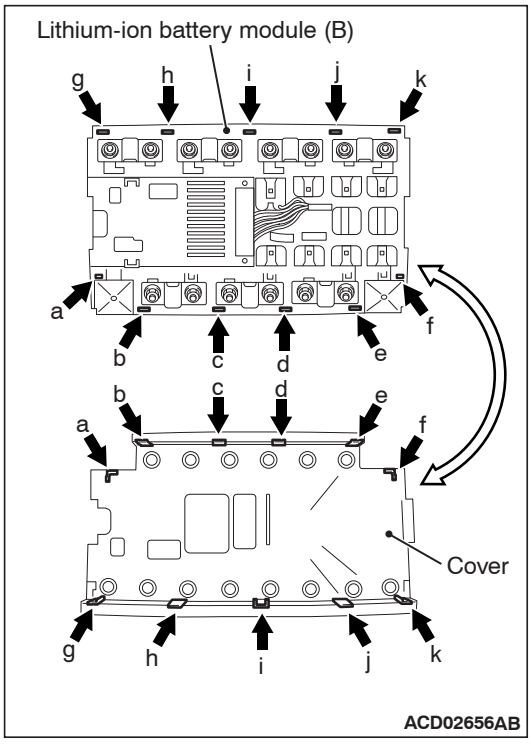

1. The arrows indicate the tabs on the cover.

⚠ CAUTION

Handle the cover carefully to avoid breakage to its small tabs.

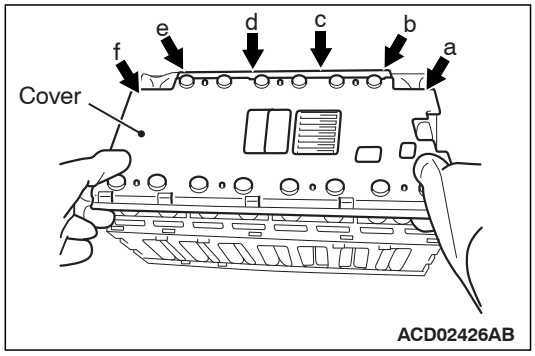

2. Position the tabs (f to a) on the cover.

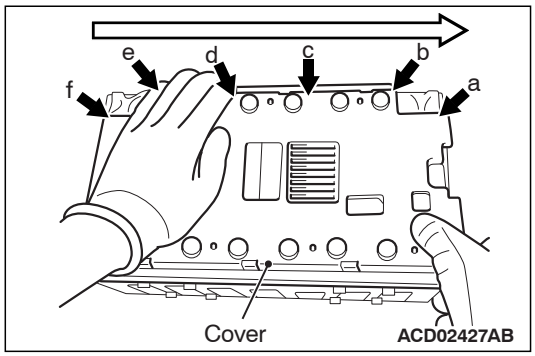

3. Engage the cover carefully with your left hand while making sure that the tabs (f to a) are engaged one after the other.

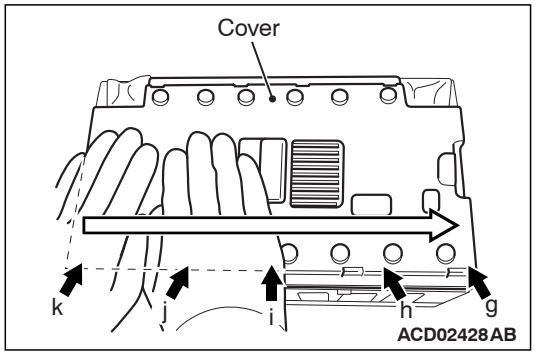

4. Engage the cover carefully with your hands while making sure that the tabs (k to g) are engaged one after the other.

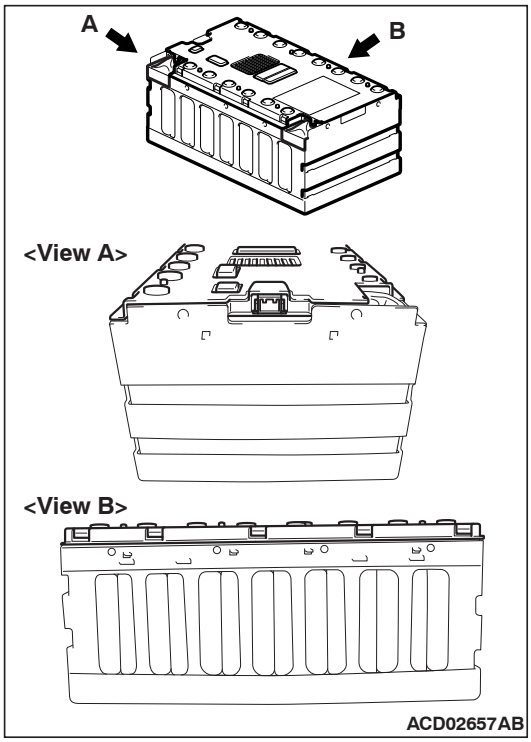

5. Check that the cover is not adrift and all of the tabs are engaged securely.

Drive battery module replacement

M1549406400079

⚠ CAUTION

- **Do not move the vehicle while the drive battery module is replaced.**
- **Do not subject the battery module to strong impact. Do not reuse the battery module that has been subjected to impact (e.g. it was dropped on the floor). Replace it with a new one.**

1. Lower the drive battery assembly. Then replace a defective module with the special tool LEV40 dummy battery module (eight cells) (MB992926).(Refer to .)
2. Mount the drive battery assembly to the vehicle.

A <Added>

NOTE:
On vehicles with electric heater, refrigerant must not be refilled.

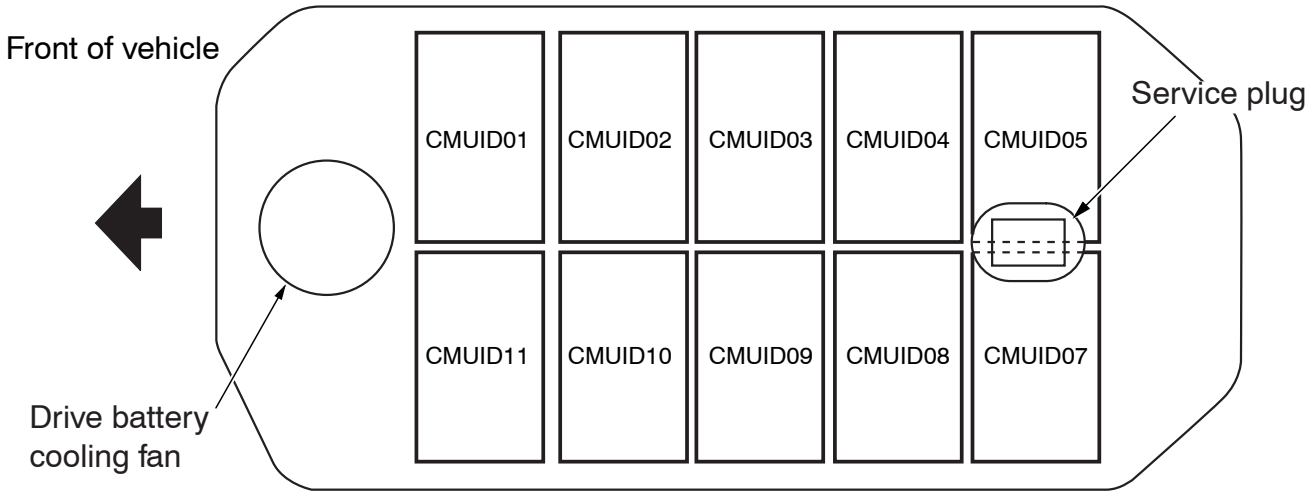

NOTE: CMU ID 06 is empty.

3. Use the M.U.T.-III to select and execute "Deactivating CMU support forcibly" on the BMU special function. Then write the CMU ID, which is stored in the removed module, to the BMU.
4. Use the M.U.T.-III to select and execute "Drive battery auto capacity measured" on the BMU special function menu.
5. Check the service data "Item No. 402; Auto capacity measurement result history 1". Then obtain the replacement module, which corresponds to the measured capacity. If the voltage deviates among the battery cells by 20 mV or more, remove the module. Then use the special tool Battery charger and discharger (MB992913) to charge the module.
6. Use special tool MB992913 to charge the replacement module.

   NOTE: For how to charge, refer to the operation manual, which is supplied with the special tool.
7. Replace the special tool LEV40 dummy battery module (eight cells) (MB992926) with the replacement module.
8. Assemble the drive battery, and perform the air leak check (Refer to). Then mount the battery to the vehicle.
9. Erase diagnosis codes using M.U.T.-III and then turn off the electric motor switch for ten seconds.
10. Use the M.U.T.-III to select and execute "Assigning CMU ID" on the BMU special function menu. Then assign an ID to the CMU.
11. Use the M.U.T.-III to select and execute "Drive battery auto capacity measured" on the BMU special function menu. Check that no diagnosis codes are set.

INSPECTION

Air leak check

M1549405200049

Preparation for inspection

⚠ CAUTION

When placing the drive battery, allow sufficient clearance to cover the drain plug with the special tool.

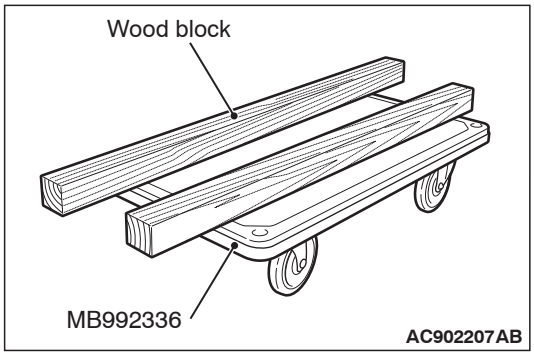

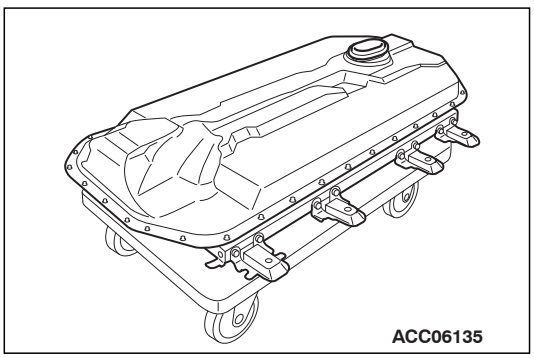

1. Remove the handle of the EV battery cart (special tool: MB992336) and set the two wood blocks (right side: 90 x 90 x 1500 mm, left side: 90 x 90 x 1650 mm). Then place the drive battery on the wood blocks.
2. Remove the battery tray cover, and remove the breather plug by disengaging its tab behind the cover.

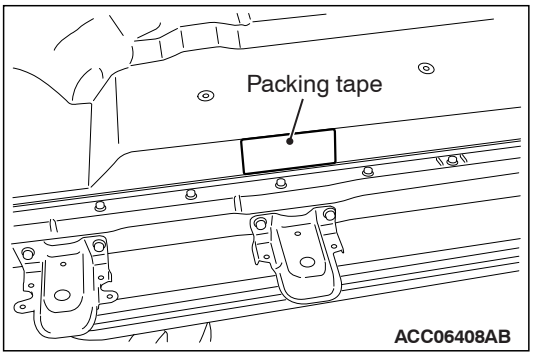

3. Use a packing tape to seal the breather plug hole.

⚠ CAUTION
Set the special tool securely, or air leak may be caused.

4. Fit the service plug duct seal attachment set (MB992942) to the service plug boot.

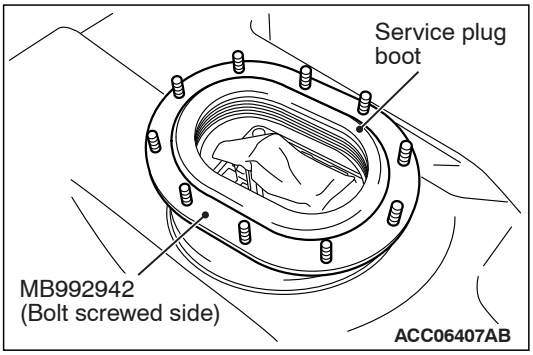

(1) The stud bolt screwed side of the service plug duct seal attachment set (MB992942) should face upwards.

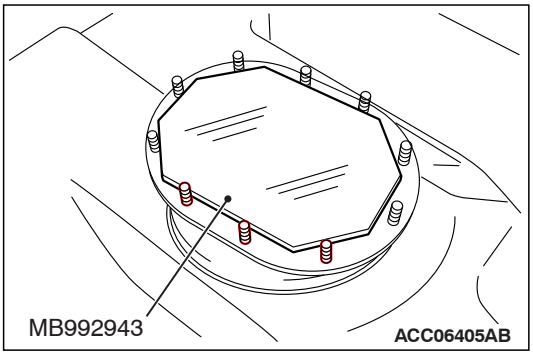

(2) Place the service plug gasket (MB992943) on the service plug boot.

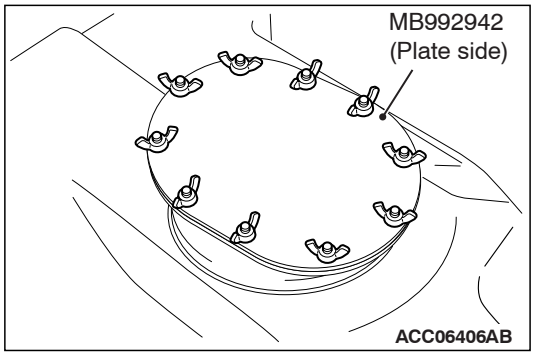

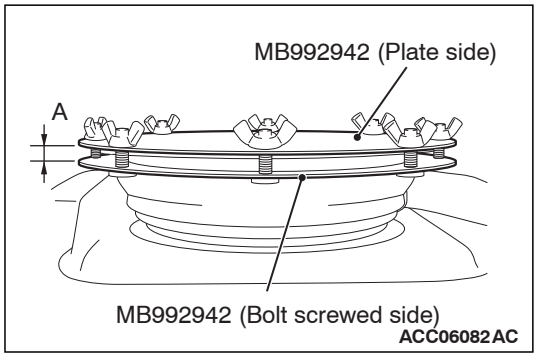

(3) Set the service plug cover (MB992942) (plate side). Tighten the wing nuts so that the distance (A) between the bolt screwed side and the plate side of the service plug cover (MB992942) is even.

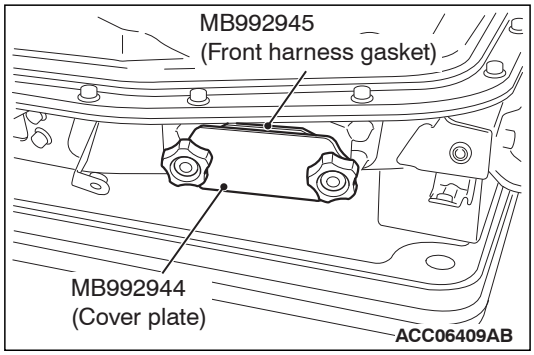

5. Use the front harness gasket (MB992945), which is included in the front harness cover (MB992944), to seal the disconnected drive battery front cables (P and N lines). Then secure the gasket with the cover plate included in the front harness cover (MB992944).

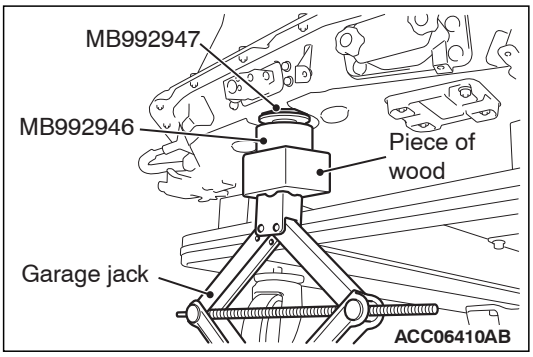

6. Use the drain plug gasket (MB992947), which is included in the drain plug cover (MB992946), to seal the opening of the drain plug. Then support the gasket with the drain plug cover (MB992946), a piece of wood and a garage jack.

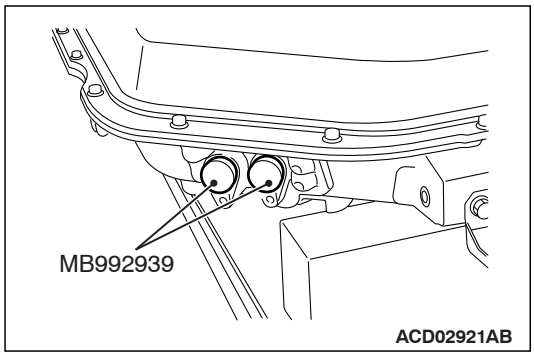

7. Insert the plugs (MB992939) into the ports for the EV charger cables. <Vehicles with quick-charging system>

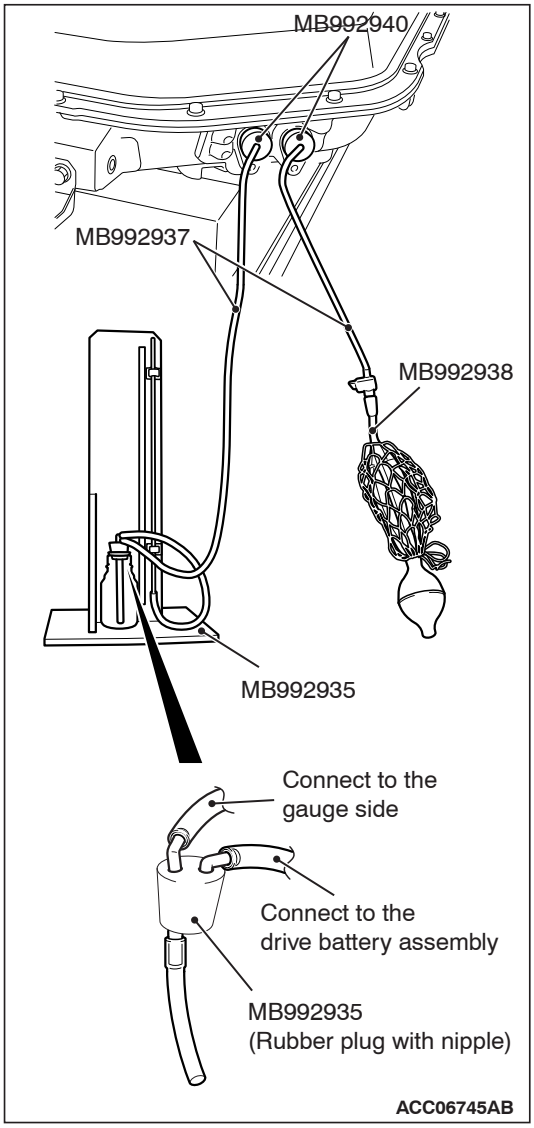

8. Install the pressure gauge unit (MB992935), the hoses (MB992937), the air pump (MB992938) and the nipples (MB992940) into the ports for the drive battery cables. Connect the longer tube spliced at rubber plug with nipples of the pressure gauge unit (MB992935) to the gauge on the measuring bench, and connect the shorter tube to the drive battery assembly.

How to check

⚠ CAUTION

Do not place the pressure gauge unit (MB992935) higher than the drive battery assembly, or water will intrude into the drive battery assembly.

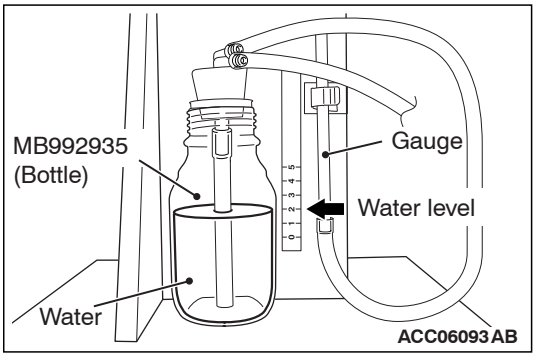

1. Pour 200 ml of water into the bottle of the pressure gauge unit (MB992935).

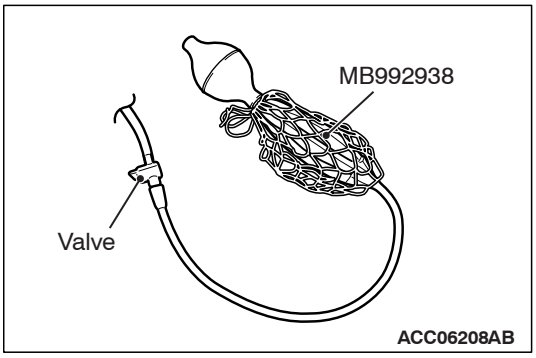

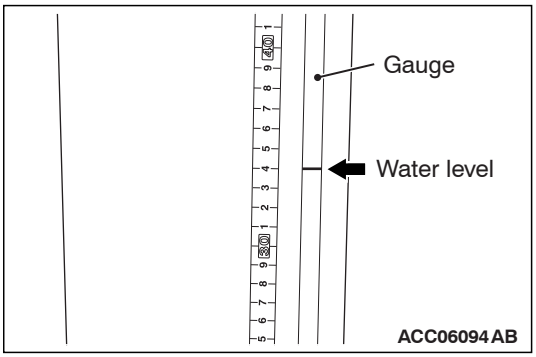

2. Operate the air pump (MB992938) to deliver water into the gauge side of the pressure gauge unit (MB992935) so that the water level in the gauge rises 320mm above the water level in the bottle.
3. Close the valve of the special tool Air pump (MB992938) and then wait for ten minutes.
4. Then measure the water level inside the gauge.

   OK: The water level inside the gauge should fluctuate within 19 mm.

5. If the water level fluctuation exceeds the specified range, locate air leakage by using soapy water to repair it.

Contactor check

M1549405300068

Checks of main contactor (+), main contactor (–) and electric charging contactor

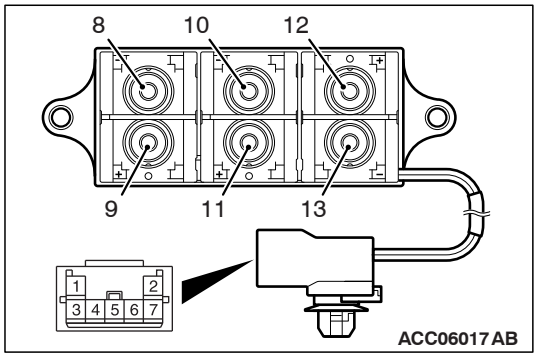

Main contactor (+)

Battery voltage	Terminal number	Normal conditions
Deenergised	10 – 11	No continuity
Energised [between terminal 3 (+) and terminal 1 (–)]		Continuity exists (2 Ω or less).

Main contactor (–)

Battery voltage	Terminal number	Normal conditions
Deenergised	12 – 13	No continuity
Energised [between terminal 7 (+) and terminal 2 (–)]		Continuity exists (2 Ω or less).

Electric charging contactor

Battery voltage	Terminal number	Normal conditions
Deenergised	8 – 9	No continuity
Energised [between terminal 4 (+) and terminal 6 (–)]		Continuity exists (2 Ω or less).

Attached sheet 85

Check of quick-charging contactors (+) and (–)

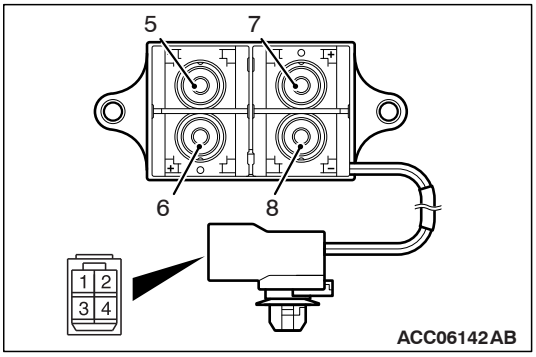

Quick-charging contactor (+)

Battery voltage	Terminal number	Normal conditions
Deenergised	5 – 6	No continuity
Energised [terminal 1 (+), terminal 3 (–)]		Continuity exists (2 Ω or less).

Quick charging contactor (–)

Battery voltage	Terminal number	Normal conditions
Deenergised	7 – 8	No continuity
Energised [between terminal 2 (+) and terminal 4 (–)]		Continuity exists (2 Ω or less).

Local CAN terminal resistor check

M1549405500040

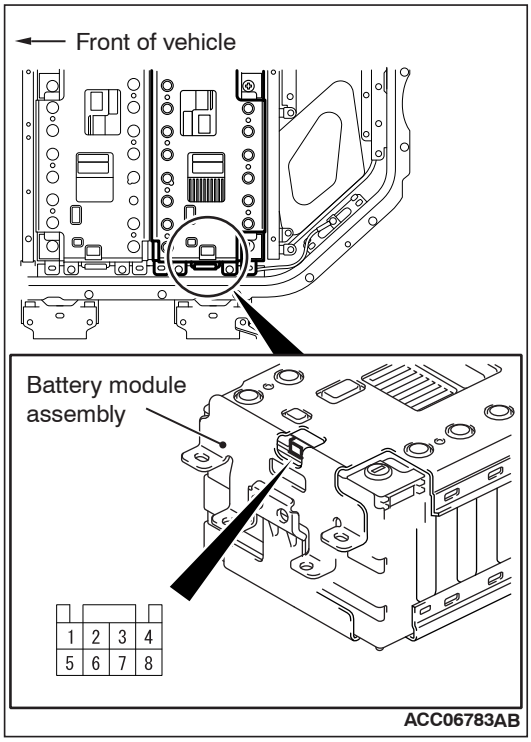

Terminal number	Normal conditions
3 – 5	114 - 126 Ω