SERVICE BULLETIN

MITSUBISHI MOTORS

GLOBAL AFTER SALES OFFICE, MITSUBISHI MOTORS CORPORATION

PURPOSE : INFORMATION	ISSUE NO. : MSB-14EX00-001	DATE : 2014-03-11
SUBJECT : INFORMATION ON 2014.5 OUTLANDER		<DESTINATION/MODEL> (EUR/ARGENTINA/SOUTH AFRICA) OUTLANDER(GF0W) <M/Y> 14.5
GROUP : GENERAL		

1. Description :

This Service Bulletin contains the information about the 2014.5 OUTLANDER Workshop Manual

2. Affected service manuals :

Applicable manual	Pub. No.	Content
2014 OUTLANDER/OUTLANDER PHEV Workshop Manual	CGFE14E2-CD ENG CGFF14E2-CD FRE CGFG14E2-CD GER CGFS14E2-CD SPA CGFI14E2-CD ITA	Attached sheet 1-2

3. About the details :

Please refer to the attached document (Attached sheet 1-2)
The groups regarding the changes in this service bulletin are as shown below :
G:00/G:13B/ G:13C/G:13D/G:15/G:23B/G:23C/G:31/G:42A/G:42B/G:51/G:54A/G:70/G:90

4. Effective time : From the vehicles of 14.5MY

GROUP 00

GENERAL

CONTENTS

GENERAL 00

GENERAL <ELECTRICAL> 00E

NOTES

GROUP 00

GENERAL

CONTENTS

VEHICLE IDENTIFICATION 00-2
MODELS 00-2

GENERAL DATA AND SPECIFICATIONS 00-5

PRECAUTIONS BEFORE SERVICE 00-15
CODING LIST 00-15

VEHICLE IDENTIFICATION

MODELS

M1001000308141

VEHICLES FOR EUROPE

<2000>

Model code		Seating capacity	Engine model	Transmission model	Fuel supply system
GF7W	XNSXL6	5-persons	4J11 (1,998 mL) SOHC MIVEC petrol engine, Auto Stop & Go (AS&G) <Clear Tec AS&G>	F5MBB (Front wheel drive 2WD, 5M/T)	MPI
	XTXXL6	7-persons		F1CJA (Front wheel drive 2WD, INVECS-III CVT with sport mode)	
	XTHXL6	5-persons			
	XTHXZL6			W1CJA (Electronic control 4WD, INVECS-III CVT with sport mode)	
	XTXXZL6	7-persons			

<2200>

Model code		Seating capacity	Engine model	Transmission model	Fuel supply system
GF6W	XJHXR6	5-persons	4N14 (2,268 mL) DOHC Direct injection-diesel with intercooled turbocharger engine, Auto Stop & Go (AS&G) <Clear Tec AS&G>	F6MBA (Front wheel drive 2WD, 6M/T)	Electrical fuel injection (Direct injection-Diesel engine control system)
	XJHXL6				
	XJXXL6	7-persons			
	XLHFZL6	5-persons	4N14 (2,268 mL) DOHC Direct injection-diesel with intercooled turbocharger engine	W6AJA (Electronic control 4WD, INVECS-II 6A/T with sport mode)	
	XLXFZL6	7-persons			
	XLXFZR6				
	XJSXZL6	5-persons	4N14 (2,268 mL) DOHC Direct injection-diesel with intercooled turbocharger engine, Auto Stop & Go (AS&G) <Clear Tec AS&G>	W6MBA (Electronic control 4WD, 6M/T)	
	XJSXZR6				
	XJXXZL6	7-persons			
	XJXXZR6				
GF6V	XJLXZR6	2-persons			

VEHICLES FOR ARGENTINA

<2000>

Model code		Seating capacity	Engine model	Transmission model	Fuel supply system
GF7W	XNSPL6A	5-persons	4J11 (1,998 mL) SOHC MIVEC petrol engine	F5MBB (Front wheel drive 2WD, 5M/T)	MPI
	XTSPL6A			F1CJA (Front wheel drive 2WD, INVECS-III CVT with sport mode)	

<2400>

Model code		Seating capacity	Engine model	Transmission model	Fuel supply system
GF8W	XTXPZL6A	7-persons	4J12 (2,360 mL) SOHC MIVEC petrol engine	W1CJA (Electronic control 4WD, INVECS-III CVT with sport mode)	MPI

VEHICLES FOR SOUTH AFRICA

<2400>

Model code		Seating capacity	Engine model	Transmission model	Fuel supply system
GF3W	XTMHZR6S	7-persons	4B12 (2,360 mL) DOHC MIVEC petrol engine	W1CJA (Electronic control 4WD, INVECS-III CVT with sport mode)	MPI

MODEL CODE

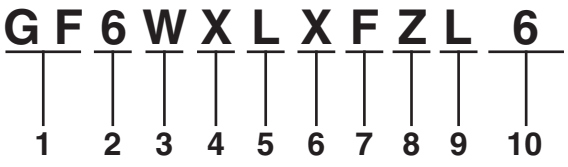

ACE00012AB

No.	Item	Content	
1	Development	GF	OUTLANDER
2	Engine type	3	2.4L MPI (4B12) MIVEC
		6	2.2L Diesel (4N14)
		7	2.0L MPI (4J11) MIVEC
		8	2.4L MPI (4J12) MIVEC
3	Vehicle type	V	Van
		W	Station wagon
4	Body style	X	4-door with tailgate
5	Transmission type	J	6M/T
		L	6A/T
		N	5M/T
		T	CVT
6	Trim level (Price class)	H	Vehicles for Europe: H-line <5-seating>
		L	Vehicles for Europe: M-line
		M	Vehicles for South Africa: M-line
		S	Vehicles for Europe and Argentina: M-line
		X	Vehicles for Europe and Argentina: H-line <7-seating>
7	Engine specification	F	Intercooled turbocharger (DOHC)
		H	MIVEC (DOHC)
		P	MIVEC (SOHC)
		X	Auto Stop & Go (AS&G) <Clear Tec AS&G>
8	Special feature	None	2WD
		Z	4WD
9	Steering wheel location	L	Left-hand drive
		R	Right-hand drive
10	Destination	6	Vehicles for Europe
		6A	Vehicles for Argentina
		6S	Vehicles for South Africa

GENERAL DATA AND SPECIFICATIONS

M1001000908626

VEHICLES FOR EUROPE

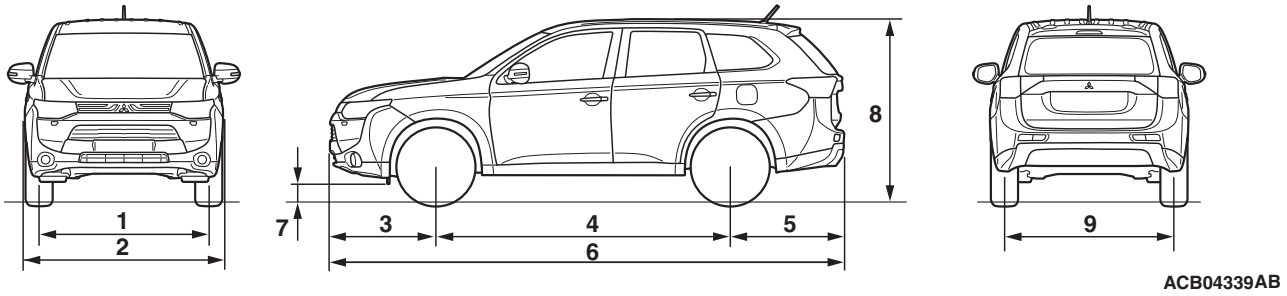

ACB04339AB

<2000>

Item			**GF7W**	
			XNSXL6	**XTXXL6**
Vehicle dimension mm	Front track	1	1,540	1,540
	Overall width	2	1,800	1,800
	Front overhang	3	955	955
	Wheelbase	4	2,670	2,670
	Rear overhang	5	1,030	1,030
	Overall length	6	4,655	4,655
	Ground clearance (unladen)	7	190	190
	Overall height (unladen)	8	1,680	1,680
	Rear track	9	1,540	1,540
Vehicle weight kg	Kerb weight	Without full optional parts	1,385	1,455
		With full optional parts	1,469	1,538
	Gross vehicle weight		1,985	2,170
	Gross axle weight rating-front		1,150	1,150
	Gross axle weight rating-rear		1,250	1,250
	Gross combination weight		3,665	3,850
Seating capacity			5	7
Engine	Model No.		4J11	4J11
	Type		SOHC MIVEC petrol engine, Auto Stop & Go	SOHC MIVEC petrol engine, Auto Stop & Go
	Total displacement mL		1,998	1,998
	Max. output <EEC> kW/rpm		110/6,000	110/6,000
	Max. torque <EEC> N·m/rpm		195/4,100 – 4,200	195/4,100 – 4,200
Fuel system	Fuel supply system		MPI	MPI
Transmission	Model code		F5MBB	F1CJA
	Type		Front wheel drive 2WD, 5M/T	Front wheel drive 2WD, INVECS-III CVT with sport mode

Item		GF7W	
		XNSXL6	XTXXL6
Turning radius m	Body	5.73	5.73
	Wheel	5.3	5.3

Item				GF7W	
				XTHXL6	XTHXZL6
Vehicle dimension mm	Front track		1	1,540	1,540
	Overall width		2	1,800	1,810
	Front overhang		3	955	955
	Wheelbase		4	2,670	2,670
	Rear overhang		5	1,030	1,030
	Overall length		6	4,655	4,655
	Ground clearance (unladen)		7	190	190
	Overall height (unladen)		8	1,680	1,680
	Rear track		9	1,540	1,540
Vehicle weight kg	Kerb weight	Without full optional parts		1,425	1,490
		With full optional parts		1,508	1,575
	Gross vehicle weight			1,985	2,070
	Gross axle weight rating-front			1,150	1,150
	Gross axle weight rating-rear			1,250	1,250
	Gross combination weight			3,665	3,750
Seating capacity				5	5
Engine	Model No.			4J11	4J11
	Type			SOHC MIVEC petrol engine, Auto Stop & Go	SOHC MIVEC petrol engine, Auto Stop & Go
	Total displacement mL			1,998	1,998
	Max. output <EEC> kW/rpm			110/6,000	110/6,000
	Max. torque <EEC> N·m/rpm			195/4,100 – 4,200	195/4,100 – 4,200
Fuel system	Fuel supply system			MPI	MPI
Transmission	Model code			F1CJA	W1CJA
	Type			Front wheel drive 2WD, INVECS-III CVT with sport mode	Electronic control 4WD, INVECS-III CVT with sport mode
Turning radius m	Body			5.73	5.73
	Wheel			5.3	5.3

Item				GF7W
				XTXXZL6
Vehicle dimension mm	Front track		1	1,540
	Overall width		2	1,810
	Front overhang		3	955
	Wheelbase		4	2,670
	Rear overhang		5	1,030
	Overall length		6	4,655
	Ground clearance (unladen)		7	190
	Overall height (unladen)		8	1,680
	Rear track		9	1,540
Vehicle weight kg	Kerb weight	Without full optional parts		1,520
		With full optional parts		1,605
	Gross vehicle weight			2,170
	Gross axle weight rating-front			1,150
	Gross axle weight rating-rear			1,250
	Gross combination weight			3,850
Seating capacity				7
Engine	Model No.			4J11
	Type			SOHC MIVEC petrol engine, Auto Stop & Go
	Total displacement mL			1,998
	Max. output <EEC> kW/rpm			110/6,000
	Max. torque <EEC> N·m/rpm			195/4,100 – 4,200
Fuel system	Fuel supply system			MPI
Transmission	Model code			W1CJA
	Type			Electronic control 4WD, INVECS-III CVT with sport mode
Turning radius m	Body			5.73
	Wheel			5.3

<2200>

Item				**GF6W**	
				XJHXL6/XJHXR6	**XJXXL6**
Vehicle dimension mm	Front track		1	1,540	1,540
	Overall width		2	1,800	1,800
	Front overhang		3	955	955
	Wheelbase		4	2,670	2,670
	Rear overhang		5	1,030	1,030
	Overall length		6	4,655	4,655
	Ground clearance (unladen)		7	190	190
	Overall height (unladen)		8	1,680	1,680
	Rear track		9	1,540	1,540
Vehicle weight kg	Kerb weight	Without full optional parts		1,500	1,530
		With full optional parts		1,583	1,613
	Gross vehicle weight			2,085	2,260
	Gross axle weight rating-front			1,150	1,150
	Gross axle weight rating-rear			1,250	1,250
	Gross combination weight			4,185	4,360
Seating capacity				5	7
Engine	Model No.			4N14	4N14
	Type			DOHC Direct injection-diesel with intercooled turbocharger engine, Auto Stop & Go	DOHC Direct injection-diesel with intercooled turbocharger engine, Auto Stop & Go
	Total displacement mL			2,268	2,268
	Max. output <EEC> kW/rpm			110/3,500	110/3,500
	Max. torque <EEC> N·m/rpm			380/1,750 – 2,500	380/1,750 – 2,500
Fuel system	Fuel supply system			Electrical fuel injection (Direct injection-Diesel engine control system)	Electrical fuel injection (Direct injection-Diesel engine control system)
Transmission	Model code			F6MBA	F6MBA
	Type			Front wheel drive 2WD, 6M/T	Front wheel drive 2WD, 6M/T
Turning radius m	Body			5.73	5.73
	Wheel			5.3	5.3

Item				GF6W	
				XLHFZL6	XLXFZL6/XLXFZR6
Vehicle dimension mm	Front track		1	1,540	1,540
	Overall width		2	1,810	1,810
	Front overhang		3	955	955
	Wheelbase		4	2,670	2,670
	Rear overhang		5	1,030	1,030
	Overall length		6	4,655	4,655
	Ground clearance (unladen)		7	190	190
	Overall height (unladen)		8	1,680	1,680
	Rear track		9	1,540	1,540
Vehicle weight kg	Kerb weight	Without full optional parts		1,585	1,615
		With full optional parts		1,672	1,702
	Gross vehicle weight			2,260	2,260
	Gross axle weight rating-front			1,150	1,150
	Gross axle weight rating-rear			1,250	1,250
	Gross combination weight			4,360	4,360
Seating capacity				5	7
Engine	Model No.			4N14	4N14
	Type			DOHC Direct injection-diesel with intercooled turbocharger engine	DOHC Direct injection-diesel with intercooled turbocharger engine
	Total displacement mL			2,268	2,268
	Max. output <EEC> kW/rpm			110/3,500	110/3,500
	Max. torque <EEC> N·m/rpm			360/1,500 – 2,750	360/1,500 – 2,750
Fuel system	Fuel supply system			Electrical fuel injection (Direct injection-Diesel engine control system)	Electrical fuel injection (Direct injection-Diesel engine control system)
Transmission	Model code			W6AJA	W6AJA
	Type			Electronic control 4WD, INVECS-II 6A/T with sport mode	Electronic control 4WD, INVECS-II 6A/T with sport mode
Turning radius m	Body			5.73	5.73
	Wheel			5.3	5.3

Item				GF6W	
				XJXXZL6/XJXXZR6	XJSXZL6/XJSXZR6
Vehicle dimension mm	Front track		1	1,540	1,540
	Overall width		2	1,810	1,810
	Front overhang		3	955	955
	Wheelbase		4	2,670	2,670
	Rear overhang		5	1,030	1,030
	Overall length		6	4,655	4,655
	Ground clearance (unladen)		7	190	190
	Overall height (unladen)		8	1,680	1,680
	Rear track		9	1,540	1,540
Vehicle weight kg	Kerb weight	Without full optional parts		1,595	1,560
		With full optional parts		1,680	1,650
	Gross vehicle weight			2,260	2,260
	Gross axle weight rating-front			1,150	1,150
	Gross axle weight rating-rear			1,250	1,250
	Gross combination weight			4,360	4,360
Seating capacity				7	5
Engine	Model No.			4N14	4N14
	Type			DOHC Direct injection-diesel with intercooled turbocharger engine, Auto Stop & Go	DOHC Direct injection-diesel with intercooled turbocharger engine, Auto Stop & Go
	Total displacement mL			2,268	2,268
	Max. output <EEC> kW/rpm			110/3,500	110/3,500
	Max. torque <EEC> N·m/rpm			380/1,750 – 2,500	380/1,750 – 2,500
Fuel system	Fuel supply system			Electrical fuel injection (Direct injection-Diesel engine control system)	Electrical fuel injection (Direct injection-Diesel engine control system)
Transmission	Model code			W6MBA	W6MBA
	Type			Electronic control 4WD, 6M/T	Electronic control 4WD, 6M/T
Turning radius m	Body			5.73	5.73
	Wheel			5.3	5.3

Item				GF6V
				XJLXZR6
Vehicle dimension mm	Front track		1	1,540
	Overall width		2	1,810
	Front overhang		3	955
	Wheelbase		4	2,670
	Rear overhang		5	1,030
	Overall length		6	4,655
	Ground clearance (unladen)		7	190
	Overall height (unladen)		8	1,680
	Rear track		9	1,540
Vehicle weight kg	Kerb weight	Without full optional parts		1,515
		With full optional parts		1,605
	Gross vehicle weight			2,260
	Gross axle weight rating-front			1,150
	Gross axle weight rating-rear			1,250
	Gross combination weight			4,360
Seating capacity				2
Engine	Model No.			4N14
	Type			DOHC Direct injection-diesel with intercooled turbocharger engine, Auto Stop & Go
	Total displacement mL			2,268
	Max. output <EEC> kW/rpm			110/3,500
	Max. torque <EEC> N·m/rpm			380/1,750 – 2,500
Fuel system	Fuel supply system			Electrical fuel injection (Direct injection-Diesel engine control system)
Transmission	Model code			W6MBA
	Type			Electronic control 4WD, 6M/T
Turning radius m	Body			5.73
	Wheel			5.3

VEHICLES FOR ARGENTINA

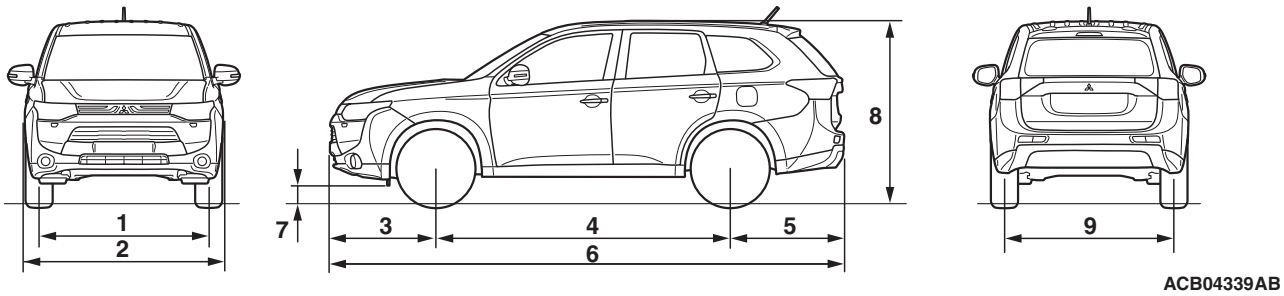

<2000>

Item				GF7W	
				XNSPL6A	XTSPL6A
Vehicle dimension mm	Front track		1	1,540	1,540
	Overall width	Without wheel arch moulding	2	1,800	1,800
		With wheel arch moulding		1,810	1,810
	Front overhang		3	955	955
	Wheelbase		4	2,670	2,670
	Rear overhang		5	1,030	1,030
	Overall length		6	4,655	4,655
	Ground clearance (unladen)		7	190	190
	Overall height (unladen)		8	1,680	1,680
	Rear track		9	1,540	1,540
Vehicle weight kg	Kerb weight	Without full optional parts		1,390	1,420
		With full optional parts		1,477	1,507
	Gross vehicle weight			1,985	1,985
	Gross axle weight rating-front			1,150	1,150
	Gross axle weight rating-rear			1,250	1,250
	Gross combination weight			3,665	3,665
Seating capacity				5	5
Engine	Model No.			4J11	4J11
	Type			SOHC MIVEC petrol engine	SOHC MIVEC petrol engine
	Total displacement mL			1,998	1,998
	Max. output <EEC> kW/rpm			110/6,000	110/6,000
	Max. torque <EEC> N·m/rpm			195/4,100 – 4,200	195/4,100 – 4,200
Fuel system	Fuel supply system			MPI	MPI
Transmission	Model code			F5MBB	F1CJA
	Type			Front wheel drive 2WD, 5M/T	Front wheel drive 2WD, INVECS-III CVT with sport mode

Item		GF7W	
		XNSPL6A	XTSPL6A
Turning radius m	Body	5.73	5.73
	Wheel	5.3	5.3

<2400>

Item				GF8W
				XTXPZL6A
Vehicle dimension mm	Front track		1	1,540
	Overall width	Without wheel arch moulding	2	1,800
		With wheel arch moulding		1,810
	Front overhang		3	955
	Wheelbase		4	2,670
	Rear overhang		5	1,030
	Overall length		6	4,655
	Ground clearance (unladen)		7	190
	Overall height (unladen)		8	1,680
	Rear track		9	1,540
Vehicle weight kg	Kerb weight	Without full optional parts		1,520
		With full optional parts		1,589
	Gross vehicle weight			2,210
	Gross axle weight rating-front			1,150
	Gross axle weight rating-rear			1,250
	Gross combination weight			3,890
Seating capacity				7
Engine	Model No.			4J12
	Type			SOHC MIVEC
	Total displacement mL			2,360
	Max. output <EEC> kW/rpm			124/6,000
	Max. torque <EEC> N·m/rpm			220/4,200
Fuel system	Fuel supply system			MPI
Transmission	Model code			W1CJA
	Type			Electronic control 4WD, INVECS-III CVT with sport mode
Turning radius m	Body			5.73
	Wheel			5.3

VEHICLES FOR SOUTH AFRICA

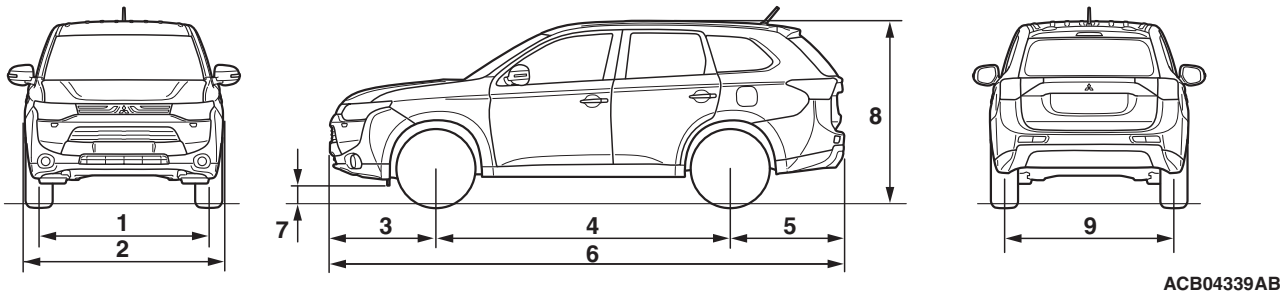

ACB04339AB

<2400>

Item				**GF3W**
				XTMHZR6S
Vehicle dimension mm	Front track		1	1,540
	Overall width	Without wheel arch moulding	2	1,800
		With wheel arch moulding		1,810
	Front overhang		3	955
	Wheelbase		4	2,670
	Rear overhang		5	1,030
	Overall length		6	4,655
	Ground clearance (unladen)		7	190
	Overall height (unladen)		8	1,680
	Rear track		9	1,540
Vehicle weight kg	Kerb weight	Without full optional parts		1,515
		With full optional parts		1,589
	Gross vehicle weight			2,210
	Gross axle weight rating-front			1,150
	Gross axle weight rating-rear			1,250
	Gross combination weight			3,890
Seating capacity				7
Engine	Model No.			4B12
	Type			DOHC MIVEC
	Total displacement mL			2,360
	Max. output <EEC> kW/rpm			123/6,000
	Max. torque <EEC> N·m/rpm			222/4,100
Fuel system	Fuel supply system			MPI
Transmission	Model code			W1CJA
	Type			Electronic control 4WD, INVECS-III CVT with sport mode

Item		GF3W
		XTMHZR6S
Turning radius m	Body	5.73
	Wheel	5.3

PRECAUTIONS BEFORE SERVICE

CODING LIST

M1001015002762

The coding data of engine-ECU and ETACS-ECU has been changed.

ENGINE ECU CODING DATA LIST

NOTE: The items to be displayed may differ depending on the version of the M.U.T.-III.

<4N1>

Item name	Initial value
GSI system	Present

ETACS-ECU CODING DATA LIST

NOTE: The items to be displayed may differ depending on the version of the M.U.T.-III.

Item name	Initial value
TPMS	Not present or Present(EUR)
TPMS information	N/A or 240 kPa
TPMS Off mode function	Not present or Present

NOTES

GROUP 00E

GENERAL <ELECTRICAL>

CONTENTS

HOW TO READ WIRING DIAGRAMS 00E-2
ABBREVIATION SYMBOLS 00E-2

OUTLINE OF CHANGE 00E-2
COMPONENT LOCATIONS 00E-2
CIRCUIT DIAGRAMS 00E-2

HOW TO READ WIRING DIAGRAMS

ABBREVIATION SYMBOLS

M1001008101883

The abbreviation symbols used in wiring diagrams are defined below.

2. FOR COMBINATION METER

Abbreviation symbol	Meaning
TPMS	Tyre pressure indicator lamp/indicator display

OUTLINE OF CHANGE

COMPONENT LOCATIONS

M1001016000468

Location of changes	Reference page	Description of changes
SENSOR	P.70-2	• Due to the addition of tyre pressure monitoring system (TPMS), TPMS transmitter (incorporating tyre pressure sensor) has been added.<Vehicles for Europe>

CIRCUIT DIAGRAMS

M1001008400762

Main title	Sub title	Reference page	Description of changes
TYRE PRESSURE MONITORING SYSTEM (TPMS)	LHD	P.90-2	• Due to the addition of tyre pressure monitoring system (TPMS), circuit diagrams have been added.
	RHD	P.90-4	

GROUP 13

FUEL

CONTENTS

FUEL SUPPLY 13B

MULTIPOINT FUEL INJECTION (MPI) <4J1> 13C

DIESEL FUEL <4N1> 13D

NOTES

GROUP 13B

FUEL SUPPLY

CONTENTS

GENERAL INFORMATION 13B-2

GENERAL INFORMATION

M1135000101609

OUTLINE OF CHANGES

The filler neck protector in the "FUEL TANK <4WD>" section has been discontinued. <Vehicles for South Africa>

GROUP 13C

MULTIPOINT FUEL INJECTION (MPI) <4J1>

CONTENTS

GENERAL INFORMATION 13C-2
TROUBLESHOOTING 13C-2
DATA LIST REFERENCE TABLE. 13C-2

GENERAL INFORMATION

M1131000107348

OUTLINE OF CHANGES

The following change is made. <4J11 - with Auto Stop & Go (AS&G) >

The other service procedure are the same as the conventional ones.

- Engine-ECU is changed.
- This makes the data list reference table change.

GENERAL SPECIFICATIONS

Items		Specifications	
Engine-ECU	Identification No.	M/T	E6T79576
		CVT	E6T79577

TROUBLESHOOTING

DATA LIST REFERENCE TABLE

M1131152005729

Item No.	Inspection Item	Inspection condition		Normal condition
122	Type of fuel	Ignition switch: ON		System voltage
160	Battery temperature	Ignition switch: ON or engine running	Battery temperature: – 20°C	– 20°C
			Battery temperature: 0°C	0°C
			Battery temperature: 20°C	20°C
			Battery temperature: 40°C	40°C
			Battery temperature: 80°C	80°C

Engine-ECU monitoring items

Item No.	INSPECTION ITEM	M.U.T.-III display descriptions	Standards at each check	Display range, and numeric value
166	Last Battery Deteriorated ODO (High Byte)	• The odometer value of the last battery deterioration determination is displayed. • When no value is stored, 0 (initial value) is displayed.	Ignition switch: ON	0 – 262,140 km
167	2nd Last Battery Deteriorated ODO (High Byte)	• The odometer value of the second last battery deterioration determination is displayed. • When no value is stored, 0 (initial value) is displayed.	Ignition switch: ON	0 – 262,140 km
168	3rd Last Battery Deteriorated ODO (High Byte)	• The odometer value of the third last battery deterioration determination is displayed. • When no value is stored, 0 (initial value) is displayed.	Ignition switch: ON	0 – 262,140 km

NOTES

GROUP 13D

DIESEL FUEL <4N1>

CONTENTS

GENERAL INFORMATION 13D-2

GENERAL INFORMATION

M1133000101454

OUTLINE OF CHANGES

The following change is made. The other service procedure are the same as the conventional ones.

- Engine-ECU is changed.

GENERAL SPECIFICATIONS

Items		Specifications		
Engine-ECU	Identification No. (Part No.)	M/T	except GF6WXJHXR6 and GF6WXJHXL6	1860C523
			GF6WXJHXR6 and GF6WXJHXL6	1860C574
		A/T		1860C524

GROUP 15

INTAKE AND EXHAUST

CONTENTS

GENERAL INFORMATION 15-2

GENERAL INFORMATION

M1151000102419

OUTLINE OF CHANGE

The dash panel heat protector in the "EXHAUST PIPE AND MAIN MUFFLER" section has been deleted. <Vehicles for Argentina, South Africa>

GROUP 23

AUTOMATIC TRANSMISSION (FF)

CONTENTS

CONTINUOUSLY VARIABLE TRANSMISSION OVERHAUL 23B

AUTOMATIC TRANSMISSION (FF) 23C

NOTES

GROUP 23B

CONTINUOUSLY VARIABLE TRANSMISSION OVERHAUL

CONTENTS

GENERAL INFORMATION 23B-2

GENERAL INFORMATION

M1231200100995

OUTLINE OF CHANGE

The W1CJA-1-A4XA type transmission on GF8W has been changed to W1CJA-1-14XA type transmission. The service procedures are the same as before.

GROUP 23C

AUTOMATIC TRANSMISSION (FF)

CONTENTS

GENERAL INFORMATION 23C-2

TROUBLESHOOTING 23C-2

SHIFT PATTERN 23C-2

DAMPER CLUTCH CONTROL 23C-3

GENERAL INFORMATION

M1231000100968

OUTLINE OF CHANGES

Due to the change below, the service procedure has been established. The other service procedures are the same as before.

- The shift pattern has been changed.
- The damper clutch control has been changed.

TROUBLESHOOTING

SHIFT PATTERN

M1231028400686

UPSHIFT PATTERN

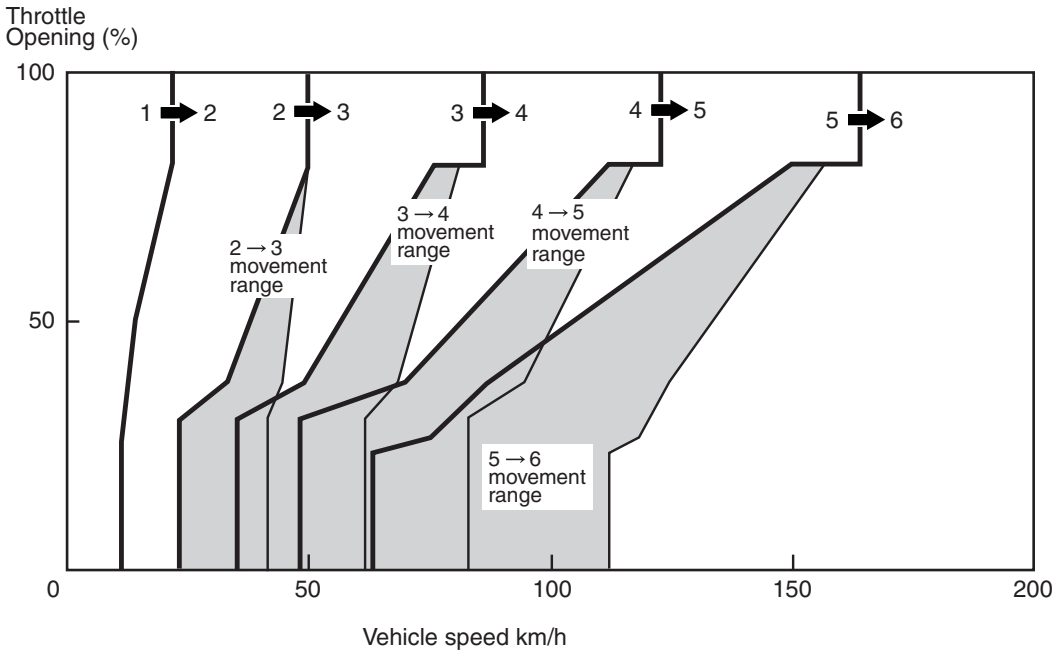

ACE00397AB

DOWNSHIFT PATTERN

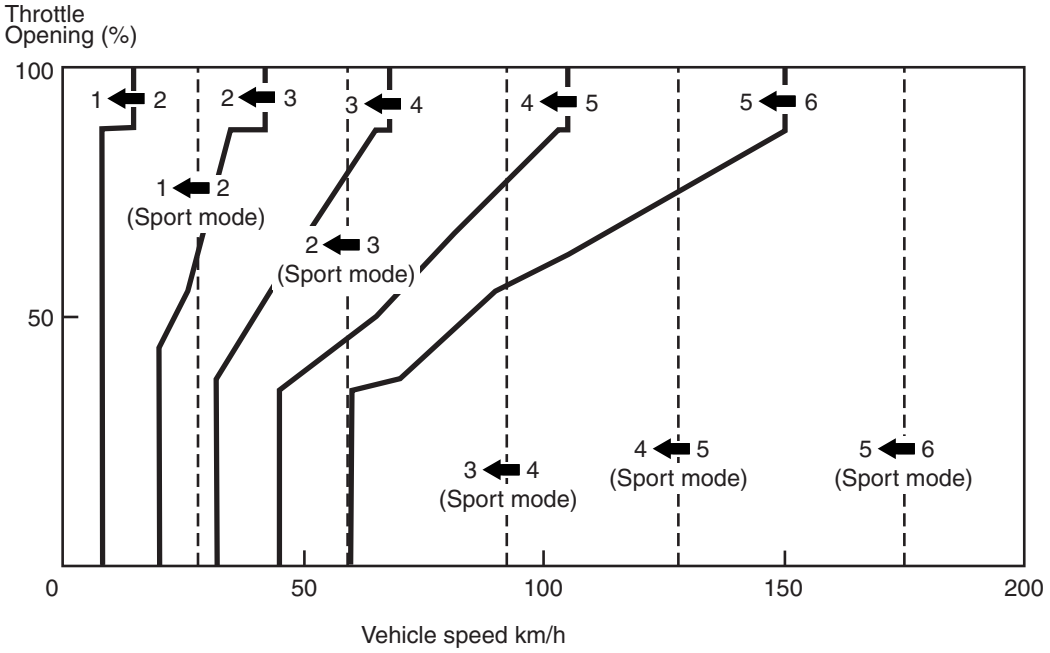

ACE00398AB

DAMPER CLUTCH CONTROL

M1231021300439

In 6th range

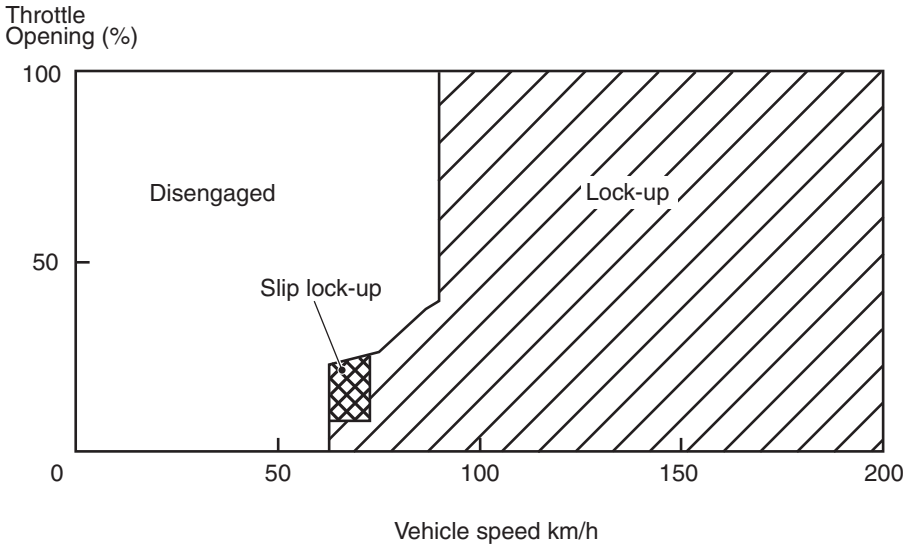

ACE00399AB

In 5th range

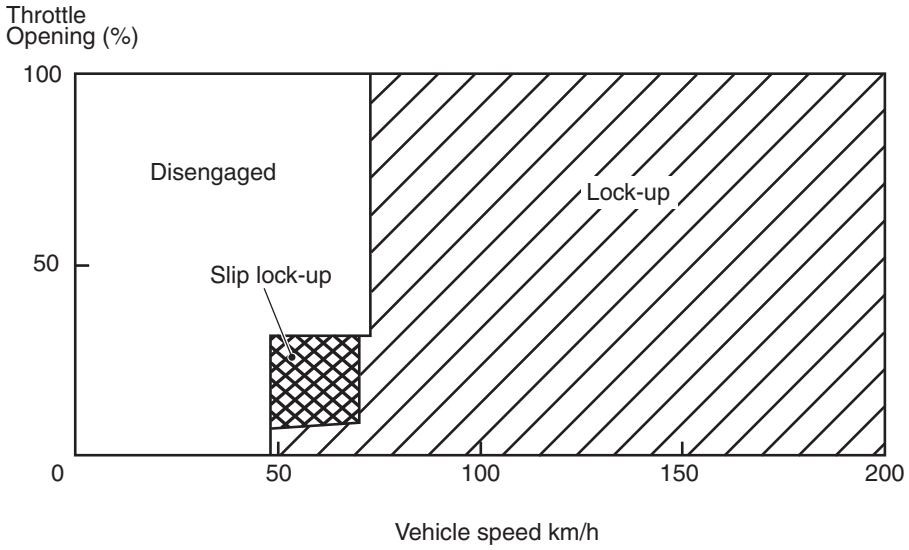

ACE00400AB

In 4th range

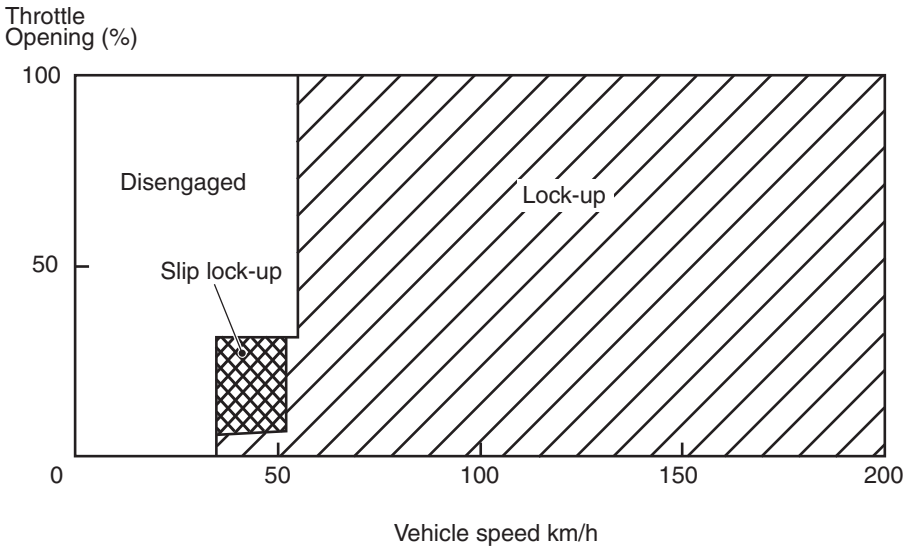

ACE00401AB

In 3rd range

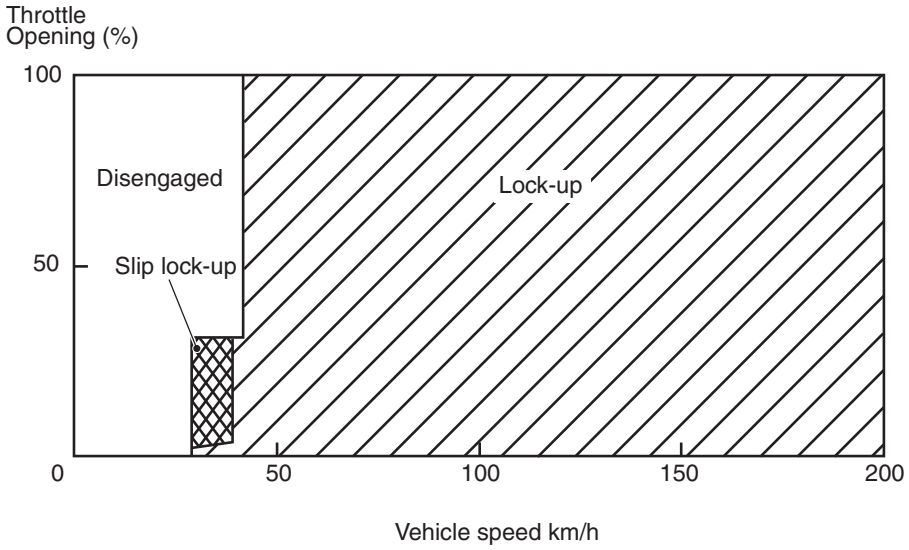

ACE00402AB

NOTES

GROUP 31

WHEEL AND TYRE

CONTENTS

GENERAL INFORMATION 31-2

SPECIAL TOOLS. 31-5

TYRE PRESSURE MONITORING SYSTEM (TPMS) DIAGNOSIS 31-7

- WARNING AND WARNING INDICATOR LIST <Standard meter> 31-7
- WARNING AND WARNING INDICATOR LIST <High contrast meter>. 31-8
- DIAGNOSIS CODE CHART 31-10
- TPMS DIAGNOSIS CODE PROCEDURES. 31-11
- TROUBLE SYMPTOM CHART. 31-21
- TPMS SYMPTOM PROCEDURES. 31-21
- DATA LIST REFERENCE TABLE. 31-24
- CHECK AT ECU TERMINAL. 31-25

ON-VEHICLE SERVICE 31-26

- TPMS TRANSMITTER CHECK. 31-26
- TYRE PRESSURE SENSOR ID REGISTRATION 31-26
- TYRE PRESSURE SENSOR ID CHECK 31-27

TYRE PRESSURE MONITORING SYSTEM (TPMS) 31-28

- TPMS RECEIVER 31-28
- REMOVAL AND INSTALLATION 31-28
- TPMS TRANSMITTER 31-28
- REMOVAL AND INSTALLATION 31-28

GENERAL INFORMATION

M1311000101847

OUTLINE OF CHANGES

The following change is made. The other service procedure are the same as the conventional ones.

- Tyre pressure monitoring system (TPMS) is adopted.

CONSTRUCTION DIAGRAM

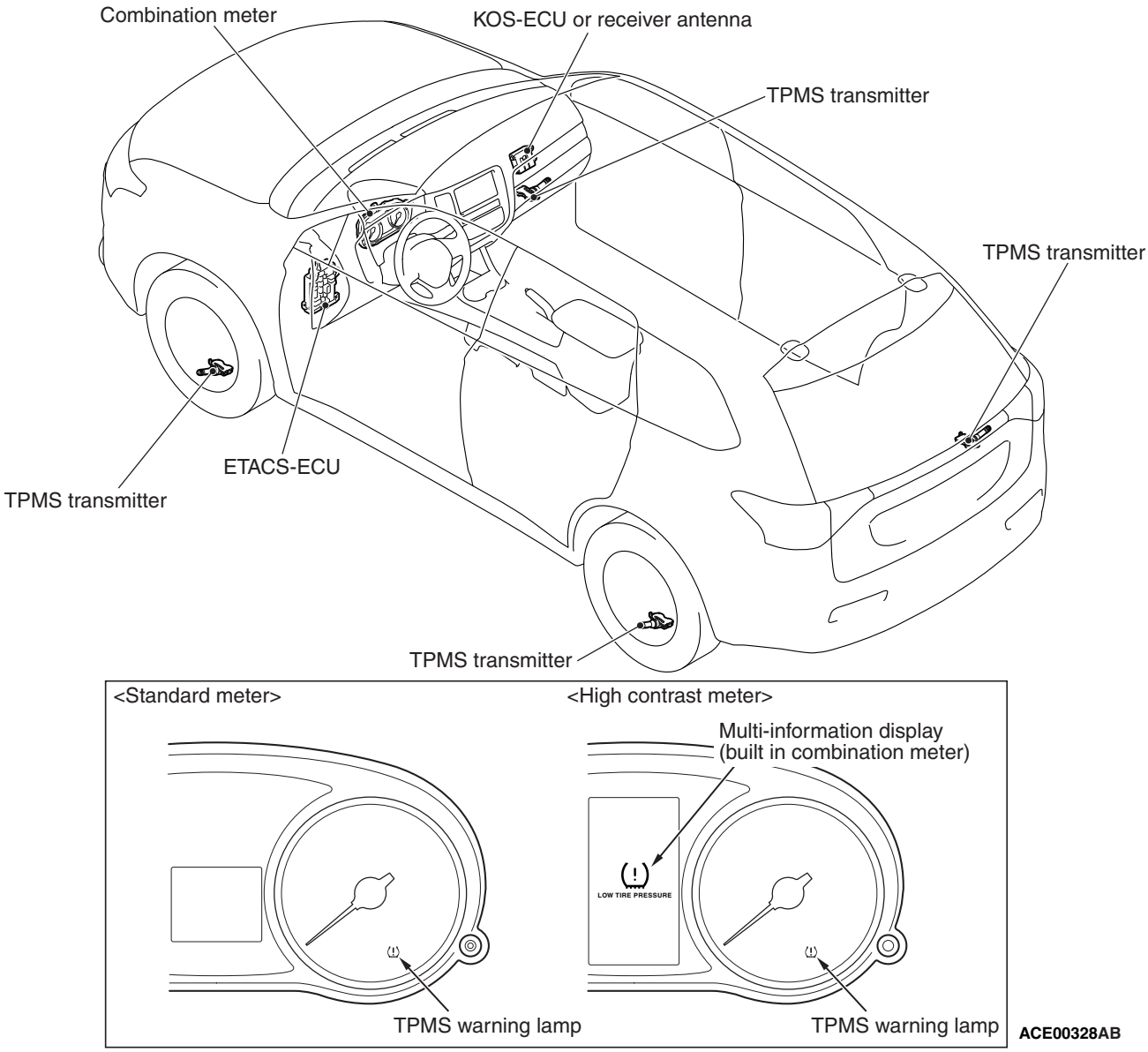

Main components and functions

Parts name	Functional description
KOS-ECU	Wireless communication with the TPMS transmitter
ETACS-ECU	Wire communication with the receiver antenna <Vehicles without KOS>
Receiver antenna	Wireless communication with the TPMS transmitter <Vehicles without KOS>
TPMS transmitter	Measure tyre pressure directly, then send radio frequency signal to receiver antenna module.
Combination meter (Multi information display, TPMS warning lamp, low tyre inflation pressure warning threshold value reset function, tyre ID set changeover function)	Communicates with KOS-ECU or ETACS-ECU via CAN. Receives the warning request or warning information from KOS-ECU or ETACS-ECU, activates* the warning lamp. Warning symbol and message is additionally displayed on the multi information display. When executing the low tyre inflation pressure warning threshold value reset function and the tyre ID set changeover function, the execution menu is displayed.

*NOTE: *: Illuminates for tyre pressure warning. Flashes for about 1 minute and then continuously illuminated for TPMS malfunction warning.*

System configuration

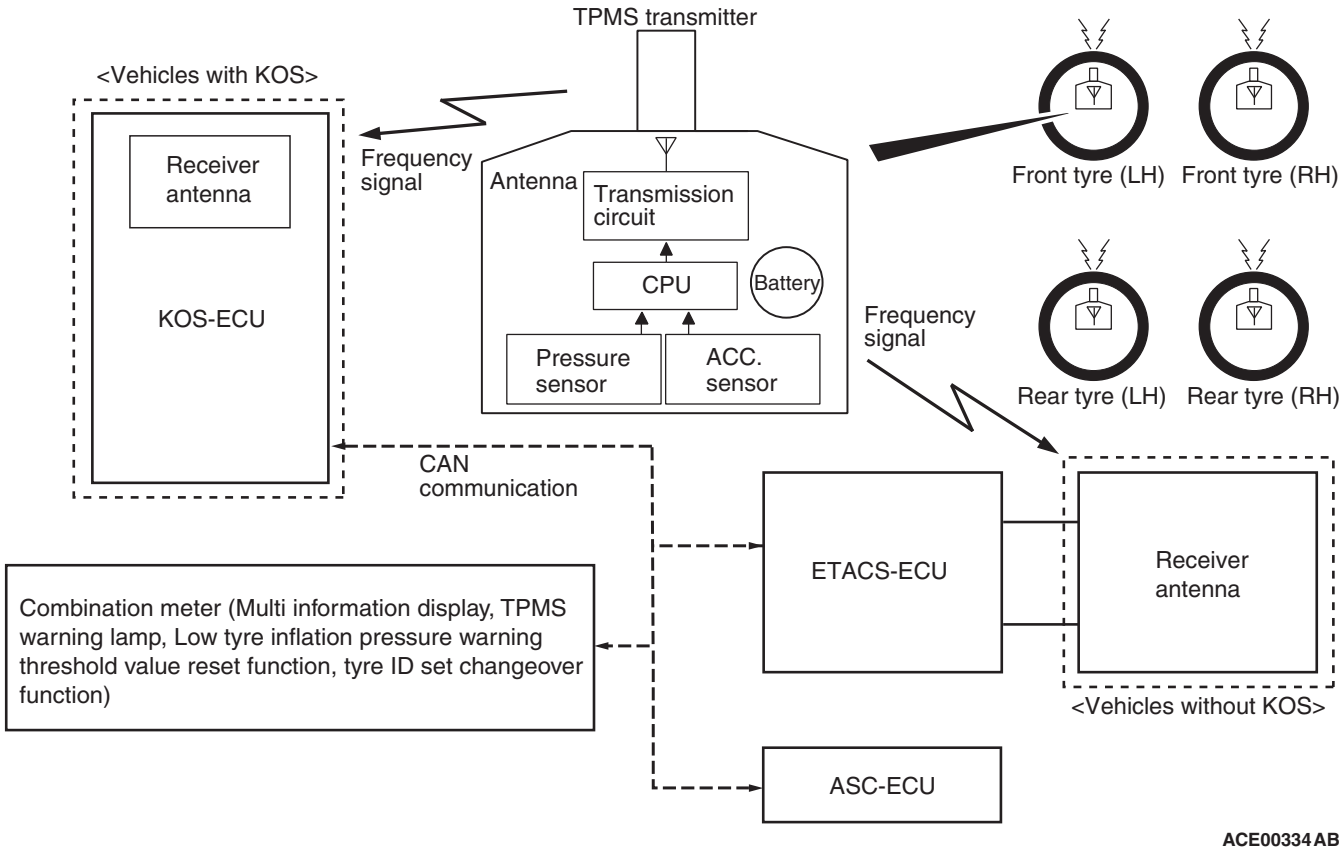

TYRE PRESSURE MONITORING SYSTEM (TPMS) FUNCTION

When the tyre pressure becomes under the specified value, the TPMS function warns the driver of that state by illuminating the TPMS warning lamp.

OPERATION

- The signals from the TPMS transmitter are received by the KOS-ECU or ETACS-ECU via receiver antenna <without KOS>.
- KOS-ECU or ETACS-ECU <without KOS> processes input signals from each TPMS transmitter as well as vehicle speed signals from the ASC-ECU. It receives the atmospheric pressure signal from engine-ECU, and when the atmospheric pressure is low (such as at high altitude), it calibrates the tyre pressure received from TPMS transmitter and makes a judgement of warning. When the road tyre pressure is low, it sends a warning signal causing the TPMS warning lamp to be illuminated. When the TPMS has problems, it sends a warning signal causing the TPMS warning lamp to be flashed*.

*NOTE: *: Change to continuous illumination after flashing for about 1 minute.*

- For 3 seconds after the engine switch is turned to the "ON" position, KOS-ECU or ETACS-ECU <without KOS> illuminates the TPMS warning lamp to check any breaks in the TPMS warning lamp circuit.
- By connecting the M.U.T.-III to the diagnosis connector, data stored in KOS-ECU or ETACS-ECU <without KOS> (data of tyre pressure and TPMS transmitter ID, the alarm status and warning history, etc.) can be displayed and TPMS transmitter ID can be registered.
- Two sets of four TPMS transmitters can be registered as sets 1 and 2.

NOTE: If the TPMS transmitter is replaced, register the ID codes of all TPMS transmitters again about the ID set of tyre which includes the replaced transmitter using the M.U.T.-III.

- Low tyre inflation pressure warning threshold value reset and tyre ID set changeover can be performed. (By registering two sets at the dealer in advance, the tyre ID set can be freely switched by operating the combination meter.)

NOTE: When the tyre ID set is switched, the low tyre inflation pressure warning threshold value will be automatically reset.

TPMS TRANSMITTER (TYRE PRESSURE SENSOR)

The TPMS transmitter combines the valve and tyre pressure sensor in a single unit. The TPMS transmitters are mounted inside the tyres. The TPMS transmitter measures tyre pressure directly with its tyre pressure sensor and sends radio frequency signals to KOS-ECU or ETACS-ECU <without KOS>. The TPMS transmitter includes acceleration sensor that senses tyre rotation, and change tyre pressure sampling and data transmission timing when vehicle is running.

NOTE: Use only genuine wheels. The use of non-genuine wheels may cause the improper installation of the TPMS transmitters, possibly resulting in air leakage and damage to the TPMS transmitter.

TYRE PRESSURE SAMPLING TIMING

Vehicle status	Sampling timing
At vehicle moving	once every 5 seconds
At vehicle stationary	once every 1 minute

NOTE: Vehicle moving = vehicle speed: approximately 25 km/h or more

DATA TRANSMISSION TIMING

Vehicle status	Transmission timing
At vehicle moving	once every 1 minute*
At vehicle stationary	once every 13 hours

If a sampled pressure varies by ±10 kPa from the last transmitted pressure value, an additional transmission will occur.

*NOTE: *: Once every 15 seconds for first 30 transmission after vehicle starts moving.*

SPECIAL TOOLS

M1311000600140

Tool	Number	Name	Use
a  MB992744 b 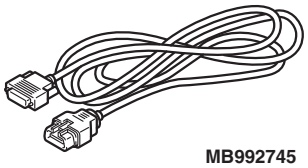 MB992745 c 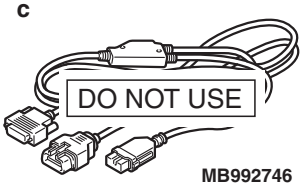 MB992746 d 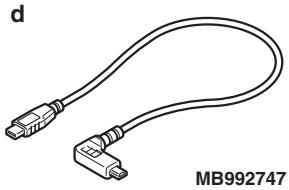 MB992747 e 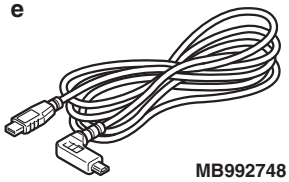 MB992748 ACB05421AB	a. MB992744 b. MB992745 c. MB992746 d. MB992747 e. MB992748	a. Vehicle communication interface-Lite (V.C.I.-Lite) b. V.C.I.-Lite main harness A (for vehicles with CAN communication) c. V.C.I.-Lite main harness B (for vehicles without CAN communication) d. V.C.I.-Lite USB cable short e. V.C.I.-Lite USB cable long	• Diagnosis code and Data list check • Tyre pressure sensor ID registration and check

Tool	Number	Name	Use
a 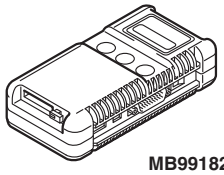 MB991824 b 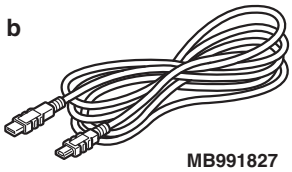 MB991827 c 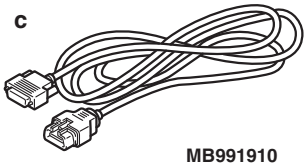 MB991910 d 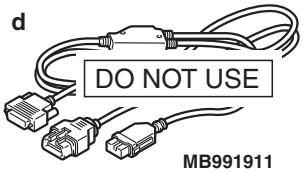 MB991911 e 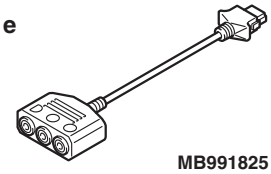 MB991825 f 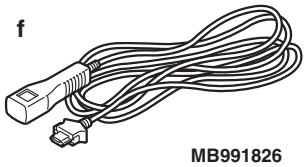 MB991826 MB991955	MB991955 a. MB991824 b. MB991827 c. MB991910 d. MB991911 e. MB991825 f. MB991826	M.U.T.-III sub-assembly a. Vehicle Communication Interface (V.C.I.) b. M.U.T.-III USB cable c. M.U.T.-III Main harness A (Vehicles with CAN communication system) d. M.U.T.-III Main harness B (Vehicles without CAN communication system) e. M.U.T.-III Measurement adapter f. M.U.T.-III Trigger harness	**⚠ CAUTION** **For vehicles with CAN communication, use M.U.T.-III main harness A to send simulated vehicle speed. If you connect M.U.T.-III main harness B instead, the CAN communication does not function correctly.** • Diagnosis code and Data list check • Tyre pressure sensor ID registration and check

TYRE PRESSURE MONITORING SYSTEM (TPMS) DIAGNOSIS

WARNING AND WARNING INDICATOR LIST <Standard meter>

M1311009500010

Due to the addition of TPMS, the TPMS warning lamp in the combination meter warns the driver when there is a TPMS-related problem.

Item		Indicator	State	Warning operation	Warning cancellation condition (when any of the condition met)
TPMS warning lamp bulb open circuit check		 AC809643	The power supply mode is other than OFF ON.	Illuminates for 3 seconds.	3 seconds have passed after the TPMS warning lamp is lit.
Tyre pressure alarm		 AC809643	The received tyre pressure value is under the alarm ON threshold value.	Illuminates.	The received tyre pressure value is over the alarm OFF threshold value.
Low tyre inflation pressure warning threshold value reset		 AC809643	Low tyre inflation pressure warning threshold value reset is activated.	Flashes slowly.	When a signal from each tyre has been received and low tyre inflation pressure warning threshold value reset has been completed.
TPMS failure warning	ID not stored	 AC809643	The TPMS transmitter ID is not registered in the KOS-ECU or ETACS-ECU <Vehicles without KOS>.	Flashes*	ID is registered normally.
	Defective EEPROM <KOS only>		Abnormality of data in the EEPROM of the KOS-ECU is detected.		Data in the EEPROM of the KOS-ECU is checked to be normal.
	Problem in signal reception		The signals from TPMS transmitters cannot be received while driving for about 10 minutes.		The signal from the TPMS transmitter that was warned is received.
	Defective sensor		The sensor failure signal is received from the TPMS transmitter.		A normal signal is received from the TPMS transmitter that was warned.

*NOTE: *: Change to continuous illumination after flashing for about 1 minute.*

WARNING AND WARNING INDICATOR LIST <High contrast meter>

M1311009500021

Due to the addition of TPMS, the TPMS warning lamp and the multi-information display in the combination meter warn the driver when there is a TPMS-related problem.

Item	Display content	Message	State	Warning operation		Warning cancellation condition (when any of the condition met)
				Multi information display	TPMS warning lamp	
TPMS warning lamp bulb open circuit check	Not displayed	–	The power supply mode is other than OFF ON.	–	Illuminates for 3 seconds.	3 seconds have passed after the TPMS warning lamp is lit.
Tyre pressure alarm	 AC809643	LOW TIRE PRESSURE	The received tyre pressure value is under the alarm ON threshold value.	Symbol and "LOW TIRE PRESSURE" is displayed.	Illuminates.	The received tyre pressure value is over the alarm OFF threshold value.
Low tyre inflation pressure warning threshold value reset	Not displayed	–	Low tyre inflation pressure warning threshold value reset is activated.	–	Flashes slowly.	When a signal from each tyre has been received and low tyre inflation pressure warning threshold value reset has been completed.

Item		Display content	Message	State	Warning operation		Warning cancellation condition (when any of the condition met)
					Multi information display	TPMS warning lamp	
TPMS failure warning	ID not stored	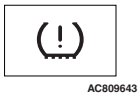 AC809643	TPMS SERVICE REQUIRED	The TPMS transmitter ID is not registered in the KOS-ECU or ETACS-ECU <Vehicles without KOS>.	Symbol and "SERVICE REQUIRED" is displayed.	Flashes*	ID is registered normally.
	Defective EEPROM <KOS only>			Abnormality of data in the EEPROM of the KOS-ECU is detected.			Data in the EEPROM of the KOS-ECU is checked to be normal.
	Problem in signal reception			The signals from TPMS transmitters cannot be received while driving for about 10 minutes.			The signal from the TPMS transmitter that was warned is received.
	Defective sensor			The sensor failure signal is received from the TPMS transmitter.			A normal signal is received from the TPMS transmitter that was warned.

*NOTE: *: Change to continuous illumination after flashing for about 1 minute.*

DIAGNOSIS CODE CHART

M1311002700143

⚠ CAUTION

- **During diagnosis, a diagnosis code associated with other system may be set when the ignition switch is turned on with connector(s) disconnected. On completion, confirm all systems for diagnosis code(s). If diagnosis code(s) are set, erase them all.**
- **Tyre pressure sensor ID registration must not be done before any diagnosis.**

Code No.	Diagnosis contents	Reference page
C1564	Vehicle speed data invalid	P.31-11
C1900	Tyre ID code No. registration	P.31-12
C1901	Vehicles speed signal	P.31-13
C1902	Reset fail(warning threshold)	P.31-14
C1910	Transmitter BATT.voltage, Tyre1	P.31-15
C1920	Transmitter BATT.voltage, Tyre2	
C1930	Transmitter BATT.voltage, Tyre3	
C1940	Transmitter BATT.voltage, Tyre4	
C1911	Tyre ID reception fail, Tyre1	
C1921	Tyre ID reception fail, Tyre2	
C1931	Tyre ID reception fail, Tyre3	
C1941	Tyre ID reception fail, Tyre4	
C1912	Tyre air pressure low, Tyre1	P.31-17
C1922	Tyre air pressure low, Tyre2	
C1932	Tyre air pressure low, Tyre3	
C1942	Tyre air pressure low, Tyre4	
C1913	Acceleration sensor, Tyre1	P.31-18
C1923	Acceleration sensor, Tyre2	
C1933	Acceleration sensor, Tyre3	
C1943	Acceleration sensor, Tyre4	
C1914	Tyre air pressure sensor, Tyre1	
C1924	Tyre air pressure sensor, Tyre2	
C1934	Tyre air pressure sensor, Tyre3	
C1944	Tyre air pressure sensor, Tyre4	
C1915	Transmitter OFF mode, Tyre1	P.31-20
C1925	Transmitter OFF mode, Tyre2	
C1935	Transmitter OFF mode, Tyre3	
C1945	Transmitter OFF mode, Tyre4	
C1916	Temperature sensor, Tyre1	P.31-18
C1926	Temperature sensor, Tyre2	
C1936	Temperature sensor, Tyre3	
C1946	Temperature sensor, Tyre4	

TPMS DIAGNOSIS CODE PROCEDURES

Code No. C1564: Vehicle speed data invalid

⚠ CAUTION
- **If diagnosis code No. C1564 is set, diagnose the CAN bus lines.**
- **When replacing the ECU, always check that the communication circuit is normal.**

DIAGNOSIS FUNCTION

If the ETACS-ECU <Vehicles without KOS> or KOS-ECU receives an abnormal vehicle speed signal from the ASC-ECU, it sets diagnosis code No. C1564. When the ETACS-ECU <Vehicles without KOS> or KOS-ECU receives an abnormal vehicle speed signal consecutively with the engine switch in the ON position, the ECU determines that there is a failure.

PROBABLE CAUSES

- Malfunction of CAN bus line
- Damaged wiring harness and connector
- Malfunction of ASC-ECU
- Malfunction of ETACS-ECU <Vehicles without KOS> or KOS-ECU

DIAGNOSIS PROCEDURE

STEP 1. M.U.T.-III CAN bus diagnostics

Use M.U.T.-III to diagnose the CAN bus lines.

Q: Is the check result normal?

YES : Go to Step 2.

NO : Repair the CAN bus lines (Refer to GROUP 54C – Troubleshooting). On completion, go to Step 2.

STEP 2. Check whether the diagnosis code is set again.

(1) Turn the ignition switch (engine starting switch) from the "LOCK" (OFF) to "ON" position.

(2) Check if the diagnosis code is set.

Q: Is the diagnosis code set?

YES : Go to Step 3.

NO : The procedure is complete.

STEP 3. M.U.T.-III other system diagnosis code

Check if the diagnosis code is set in the ASC-ECU.

Q: Is the check result normal?

YES : Go to Step 4.

NO : Carry out the troubleshooting for ASC-ECU (Refer to GROUP 35C – Diagnosis code chart).

STEP 4. Check whether the diagnosis code is set again.

(1) Turn the ignition switch (engine starting switch) from the "LOCK" (OFF) to "ON" position.

(2) Check if the diagnosis code is set.

Q: Is the diagnosis code set?

YES : Replace the KOS-ECU (Refer to GROUP 42B – KOS-ECU P.42B-2) <Vehicles without KOS> or ETACS-ECU (Refer to GROUP 54A – ETACS-ECU P.54A-3) and register the ID codes.

NO : The procedure is complete.

Code No. C1900: Tyre ID code No. registration

⚠ CAUTION
- **If diagnosis code No. C1900 is set, diagnose the CAN bus lines.**
- **When replacing the ECU, always check that the communication circuit is normal.**

DIAGNOSIS FUNCTION
When the ID registration information of the TPMS transmitter is not stored in ETACS-ECU <Vehicles without KOS> or KOS-ECU, and/or when ETACS-ECU <Vehicles without KOS> or KOS-ECU is replaced with a new one, this code is set. If the ID registration mode is terminated forcibly or time-out after one or more TPMS transmitters are registered in the ID registration mode, the ID information in the ETACS-ECU <Vehicles without KOS> or KOS-ECU is erased, and this diagnosis code is set.

PROBABLE CAUSES
- Malfunction of CAN bus line
- Damaged wiring harness and connector
- Malfunction of TPMS transmitter
- Malfunction of ETACS-ECU <Vehicles without KOS> or KOS-ECU
- ID code registration failed

DIAGNOSIS PROCEDURE

STEP 1. M.U.T.-III CAN bus diagnostics
Use M.U.T.-III to diagnose the CAN bus lines.

Q: Is the check result normal?
YES : Go to Step 2.
NO : Repair the CAN bus lines (Refer to GROUP 54C – Troubleshooting). On completion, go to Step 2.

STEP 2. Diagnosis code check
(1) Turn the ignition switch (engine starting switch) from the "LOCK" (OFF) to "ON" position.
(2) Check if the diagnosis code is set.

Q: Is the diagnosis code set?
YES : Register the ID codes (Refer to P.31-26). Then go to Step 3.
NO : The procedure is complete.

STEP 3. Check whether the diagnosis code is set again.
(1) Turn the ignition switch (engine starting switch) from the "LOCK" (OFF) to "ON" position.
(2) Check if the diagnosis code is set.

Q: Is the diagnosis code set?
YES : Replace the KOS-ECU (Refer to GROUP 42B – KOS-ECU P.42B-2) <Vehicles without KOS> or ETACS-ECU (Refer to GROUP 54A – ETACS-ECU P.54A-3) and register the ID codes. Then start over at Step 1.
NO : The procedure is complete.

Code No. C1901: Vehicle speed signal

⚠ CAUTION
- **If diagnosis code No. C1901 is set, diagnose the CAN bus lines.**
- **When replacing the ECU, always check that the communication circuit is normal.**

DIAGNOSIS FUNCTION

ETACS-ECU <Vehicles without KOS> or KOS-ECU receives the wheel speed information from ASC-ECU via the CAN-bus line. Although ETACS-ECU <Vehicles without KOS> or KOS-ECU receives the information that the wheel is not currently rotated from ASC-ECU, if the TPMS transmitter sends the information that the wheel is rotated, this code is set.

PROBABLE CAUSES

- Malfunction of CAN bus line
- Damaged wiring harness and connector
- Malfunction of TPMS transmitter
- Malfunction of ETACS-ECU <Vehicles without KOS> or KOS-ECU
- Malfunction of ASC-ECU
- Malfunction of ETACS-ECU

DIAGNOSIS PROCEDURE

STEP 1. M.U.T.-III CAN bus diagnostics

Use M.U.T.-III to diagnose the CAN bus lines.

Q: Is the check result normal?
YES : Go to Step 3.
NO : Repair the CAN bus lines (Refer to GROUP 54C – Troubleshooting). On completion, go to Step 2.

STEP 2. Check whether the diagnosis code is set again.

(1) Turn the ignition switch (engine starting switch) from the "LOCK" (OFF) to "ON" position.
(2) Check if the diagnosis code is set.

Q: Is the diagnosis code set?
YES : Go to Step 3.
NO : The procedure is complete.

STEP 3. M.U.T.-III other system diagnosis code

Check if the diagnosis code is set in the ASC-ECU (Refer to GROUP 35C – Diagnosis code chart).

Q: Is the check result normal?
YES : Go to Step 4.
NO : Carry out the troubleshooting for ASC-ECU (Refer to GROUP 35C – Diagnosis code chart). Then go to Step 6.

STEP 4. M.U.T.-III other system diagnosis code

Check if the diagnosis code is set in the ETACS-ECU (Refer to GROUP 54A – ETACS, Diagnosis code chart).

Q: Is the check result normal?
YES : Go to Step 5.
NO : Troubleshoot the set diagnosis code (Refer to GROUP 54A – ETACS, Diagnosis code chart). Then go to Step 6.

STEP 5. Check the TPMS transmitter acceleration.

Check the acceleration value of each TPMS transmitter by the air pressure of data list (Refer to P.31-24).

OK: Acceleration value: 5G or less

Q: Is the check result OK?
YES : Replace the KOS-ECU (Refer to GROUP 42B – KOS-ECU P.42B-2) <Vehicles without KOS> or ETACS-ECU (Refer to GROUP 54A – ETACS-ECU P.54A-3) and register the ID codes. Then go to Step 6.
NO : Replace the TPMS transmitter and register ID codes (Refer to P.31-26). Then go to Step 6.

STEP 6. Check whether the diagnosis code is set again.

(1) Turn the ignition switch (engine starting switch) from the "LOCK" (OFF) to "ON" position.
(2) Check if the diagnosis code is set.

Q: Is the diagnosis code set?
YES : Start over at Step 1.
NO : The procedure is complete.

Code No. C1902: Reset fail (warning threshold)

⚠ CAUTION
- **If diagnosis code No. C1902 is set, diagnose the CAN bus lines.**
- **When replacing the ECU, always check that the communication circuit is normal.**

DIAGNOSIS FUNCTION
When a tyre inflation pressure warning threshold value cannot be reset due to a timeout (10 minutes or more have passed in total at 35 km/h or more), the ETACS-ECU <Vehicles without KOS> or KOS-ECU will set a diagnosis code.

PROBABLE CAUSES
- Malfunction of CAN bus line
- Damaged wiring harness and connector
- Malfunction of TPMS transmitter
- Malfunction of ETACS-ECU <Vehicles without KOS> or KOS-ECU
- ID code registration failed
- Registered IDs unmatched
- Effective ID set unmatched

DIAGNOSIS PROCEDURE

STEP 1. M.U.T.-III CAN bus diagnostics
Use M.U.T.-III to diagnose the CAN bus lines.

Q: Is the check result normal?
YES : Go to Step 2.
NO : Repair the CAN bus lines (Refer to GROUP 54C – Troubleshooting). On completion, go to Step 2.

STEP 2. Check whether the diagnosis code is set again.
(1) Turn the ignition switch (engine starting switch) from the "LOCK" (OFF) to "ON" position.
(2) Check if the diagnosis code is set.

Q: Is the diagnosis code set?
YES : Go to Step 3.
NO : The procedure is complete.

STEP 3. Check whether the diagnosis code is set.

Q: Are all of Code Nos. C1911, C1921, C1931 and C1941 set?
YES : Press the multi-information display switch to toggle tyre ID sets. Then perform TPMS TRANSMITTER CHECK. (Toggling the tyre ID set will trigger the reset function automatically. Then the TPMS warning lamp will start flashing slowly. Furthermore, C1911, C1921, C1931 and C1941 will be set as "stored".). Then go to Step 4.
NO : Go to Step 7.

STEP 4. Check the tyre IDs for the TPMS transmitters.
Could all the tyre IDs for the TPMS transmitters be confirmed?

Q: Is the check result normal?
YES : Adjust the tyre inflation pressure to the recommended value. Then road test for a while to complete the reset function.Then go to Step 6.
NO : Go to Step 5.

STEP 5. Check the tyre IDs for the TPMS transmitters.
Could any of the tyre IDs for the TPMS transmitters be confirmed?

Q: Is the check result normal?
YES : Register the applicable IDs to the ECU as the active tyre ID set.Then go to Step 8.
NO : Toggle the tyre ID set and then register applicable IDs to the ECU.Then go to Step 8.

STEP 6. Check the reset function.
Check whether the reset function has been completed normally.

Q: Has the reset function been completed normally?
YES : The procedure is complete (The incorrect tyre ID set has been activated, and this is not a malfunction.)
NO : If the reset function has not been completed after 10-minute road test, register applicable IDs as the active tyre ID set.Then go to Step 8.

STEP 7. Check for TPMS transmitter.
Identify the TPMS transmitter which the diagnosis code is set by TPMS transmitter check (Refer to P.31-26).

NOTE: The TPMS transmitter which cannot be checked may be faulty or the ID code may not be registered, thus do not replace it, but register the ID code. If the transmitter is faulty, it is replaced in the ID code registration process.

Q: Are there any TPMS transmitters which are identified?
YES : Among the checked TPMS transmitters, replace the TPMS transmitters to which the diagnosis code is set. Then register the ID codes (Refer to P.31-26). Then go to Step 8.
NO : Even when no transmitter is checked, register the ID codes (Refer to P.31-26). Then go to Step 8.

STEP 8. Recheck for diagnosis code.
(1) Turn the ignition switch (engine starting switch) from the "LOCK" (OFF) to "ON" position.
(2) Check if the diagnosis code is set.

Q: Is the diagnosis code set?
YES : Replace the KOS-ECU (Refer to GROUP 42B – KOS-ECU P.42B-2) <Vehicles without KOS> or ETACS-ECU (Refer to GROUP 54A – ETACS-ECU P.54A-3) and register the ID codes. Then start over at Step 1.
NO : The procedure is complete.

Code No. C1910: Transmitter BATT.voltage, Tyre1
Code No. C1920: Transmitter BATT.voltage, Tyre2
Code No. C1930: Transmitter BATT.voltage, Tyre3
Code No. C1940: Transmitter BATT.voltage, Tyre4
Code No. C1911: Tyre ID reception fail, Tyre1
Code No. C1921: Tyre ID reception fail, Tyre2
Code No. C1931: Tyre ID reception fail, Tyre3
Code No. C1941: Tyre ID reception fail, Tyre4

⚠ CAUTION
- **When diagnosis code No. C1910, C1920, C1930, C1940, C1911, C1921, C1931 or C1941 is set, be sure to diagnose the CAN bus line.**
- **When replacing the ECU, always check that the communication circuit is normal.**

DIAGNOSIS FUNCTION

Code No. C1910, C1920, C1930, C1940
- When the reception abnormality warning is activated because of the low battery voltage of the TPMS transmitter.

Code No. C1911, C1921, C1931, C1941
- When ETACS-ECU <Vehicles without KOS> or KOS-ECU cannot receive the signals from the TPMS transmitters while driving for about 10 minutes, this code is set.

PROBABLE CAUSES
- Malfunction of CAN bus line
- Low battery that is incorporated into the TPMS transmitter
- Damaged wiring harness and connector
- Registered IDs unmatched
- Effective ID set unmatched
- Malfunction of TPMS transmitter
- Malfunction of ETACS-ECU <Vehicles without KOS> or KOS-ECU

DIAGNOSIS PROCEDURE

STEP 1. M.U.T.-III CAN bus diagnostics
Use M.U.T.-III to diagnose the CAN bus lines.

Q: Is the check result normal?
YES : Go to Step 3.
NO : Repair the CAN bus lines (Refer to GROUP 54C – Troubleshooting). On completion, go to Step 2.

STEP 2. Check whether the diagnosis code is set again.

(1) Turn the ignition switch (engine starting switch) from the "LOCK" (OFF) to "ON" position.
(2) Check if the diagnosis code is set.

Q: Is the diagnosis code set?
YES : Go to Step 3.
NO : The procedure is complete.

STEP 3. Check whether the diagnosis code is set.

Q: Are all of Code Nos. C1911, C1921, C1931 and C1941 set?
YES : Press the multi-information display switch to toggle tyre ID sets. Then perform TPMS TRANSMITTER CHECK. (Toggling the tyre ID set will trigger the reset function automatically. Then the TPMS warning lamp will start flashing slowly. Furthermore, C1911, C1921, C1931 and C1941 will be set as "stored".). Then go to Step 4.
NO : Go to Step 7.

STEP 4. Check the tyre IDs for the TPMS transmitters.

Could all the tyre IDs for the TPMS transmitters be confirmed?

Q: Is the check result normal?
YES : Adjust the tyre inflation pressure to the recommended value. Then road test for a while to complete the reset function.Then go to Step 6.
NO : Go to Step 5.

STEP 5. Check the tyre IDs for the TPMS transmitters.

Could any of the tyre IDs for the TPMS transmitters be confirmed?

Q: Is the check result normal?
YES : Register the applicable IDs to the ECU as the active tyre ID set.Then go to Step 8.
NO : Toggle the tyre ID set and then register applicable IDs to the ECU.Then go to Step 8.

STEP 6. Check the reset function.

Check whether the reset function has been completed normally.

Q: Has the reset function been completed normally?
YES : The procedure is complete (The incorrect tyre ID set has been activated, and this is not a malfunction.)
NO : If the reset function has not been completed after 10-minute road test, register applicable IDs as the active tyre ID set.Then go to Step 8.

STEP 7. Check for TPMS transmitter.

Identify the TPMS transmitter which the diagnosis code is set by TPMS transmitter check (Refer to P.31-26).

NOTE: The TPMS transmitter which cannot be checked may be faulty or the ID code may not be registered, thus do not replace it, but register the ID code. If the transmitter is faulty, it is replaced in the ID code registration process.

Q: Are there any TPMS transmitters which are identified?
YES : Among the checked TPMS transmitters, replace the TPMS transmitters to which the diagnosis code is set. Then register the ID codes (Refer to P.31-26). Then go to Step 8.
NO : Even when no transmitter is checked, register the ID codes (Refer to P.31-26). Then go to Step 8.

STEP 8. Check whether the diagnosis code is set again.

(1) Turn the ignition switch (engine starting switch) from the "LOCK" (OFF) to "ON" position.
(2) Check if the diagnosis code is set.

Q: Is the diagnosis code set?
YES : Replace the KOS-ECU (Refer to GROUP 42B – KOS-ECU P.42B-2) <Vehicles without KOS> or ETACS-ECU (Refer to GROUP 54A – ETACS-ECU P.54A-3) and register the ID codes. Then start over at Step 1.
NO : The procedure is complete.

Code No. C1912: Tyre air pressure low, Tyre1
Code No. C1922: Tyre air pressure low, Tyre2
Code No. C1932: Tyre air pressure low, Tyre3
Code No. C1942: Tyre air pressure low, Tyre4

⚠ CAUTION
- **If diagnosis code No. C1912, C1922, C1932 or C1942 is set, diagnose the CAN bus lines.**
- **When replacing the ECU, always check that the communication circuit is normal.**

DIAGNOSIS FUNCTION

When the tyre pressure included in the signal from the TPMS transmitter is less than the specified value, ETACS-ECU <Vehicles without KOS> or KOS-ECU sets this code.

PROBABLE CAUSES

- Malfunction of CAN bus line
- Drop of tyre pressure
- Loose TPMS transmitter mounting nut
- Flat tyre
- TPMS transmitter malfunction
- ETACS-ECU <Vehicles without KOS> or KOS-ECU malfunction
- CAN-bus line malfunction

DIAGNOSIS PROCEDURE

STEP 1. Tyre check

Check that there is no abnormality for the items below.
- Flat tyre
- Cracked tyre
- Air leak from valve
- Loose TPMS transmitter mounting nut (Refer to P.31-28).

Q: Is the check result normal?
YES : Go to Step 2.
NO : Replace it. Then go to Step 2.

STEP 2. Check whether the diagnosis code is set again.

(1) Turn the ignition switch (engine starting switch) from the "LOCK" (OFF) to "ON" position.
(2) Adjust the pressure to the recommended tyre pressure.
(3) Check if the diagnosis code is set.

Q: Is the diagnosis code set?
YES : Go to Step 3.
NO : The procedure is complete.

STEP 3. Check whether the diagnosis code is set again.

(1) Drive the vehicle for 5 minutes.

NOTE: Even within 5 minutes, if the TPMS warning lamp goes out, finish the driving and perform the operation (2).

(2) Check if the diagnosis code is set.

Q: Is the diagnosis code set?
YES : Go to Step 4.
NO : The procedure is complete.

STEP 4. M.U.T.-III CAN bus diagnostics

Use M.U.T.-III to diagnose the CAN bus lines.

Q: Is the check result normal?
YES : Go to Step 6.
NO : Repair the CAN bus lines (Refer to GROUP 54C – Troubleshooting). On completion, go to Step 5.

STEP 5. Check whether the diagnosis code is set again.

(1) Turn the ignition switch (engine starting switch) from the "LOCK" (OFF) to "ON" position.
(2) Check if the diagnosis code is set.

Q: Is the diagnosis code set?
YES : Go to Step 6.
NO : The procedure is complete.

STEP 6. Tyre pressure check by M.U.T.-III

(1) Perform the transmitter check using the M.U.T.-III (Refer to P.31-26), and check the tyre pressure values of all the wheels.
(2) Check the tyre pressure of all the wheels using the tyre pressure gauge.
(3) Compare the measured value (1) with (2).

OK: 20 kPa or less

NOTE: Do not replace the TPMS transmitter which cannot be checked.

Q: Is the check result normal?
YES : Replace the KOS-ECU (Refer to GROUP 42B – KOS-ECU P.42B-2) <Vehicles without KOS> or ETACS-ECU (Refer to GROUP 54A – ETACS-ECU P.54A-3) and register the ID codes. Then go to Step 9.
NO : Go to Step 7.

STEP 7. Tyre pressure check by M.U.T.-III

(1) Perform the transmitter check using the M.U.T.-III (Refer to P.31-26), and check the tyre pressure values of all the wheels.
(2) Check the tyre pressure of all the wheels using the tyre pressure gauge.
(3) Compare the measured value (1) with (2).

OK: 20 kPa or less

Q: Is the check result normal?

YES : Replace the KOS-ECU (Refer to GROUP 42B – KOS-ECU P.42B-2) <Vehicles without KOS> or ETACS-ECU (Refer to GROUP 54A – ETACS-ECU P.54A-3) and register the ID codes. Then go to Step 9.

NO : Replace the TPMS transmitter and register the ID codes (Refer to P.31-26). Then go to Step 8.

STEP 8. Check whether the diagnosis code is set again.

(1) Turn the ignition switch (engine starting switch) from the "LOCK" (OFF) to "ON" position.
(2) Check if the diagnosis code is set.

Q: Is the diagnosis code set?

YES : Replace the KOS-ECU (Refer to GROUP 42B – KOS-ECU P.42B-2) <Vehicles without KOS> or ETACS-ECU (Refer to GROUP 54A – ETACS-ECU P.54A-3) and register the ID codes. Then go to Step 9.

NO : The procedure is complete.

STEP 9. Check whether the diagnosis code is set again.

(1) Turn the ignition switch (engine starting switch) from the "LOCK" (OFF) to "ON" position.
(2) Check if the diagnosis code is set.

Q: Is the diagnosis code set?

YES : Start over at Step 1.

NO : The procedure is complete.

Code No. C1913: Acceleration sensor, Tyre1
Code No. C1923: Acceleration sensor, Tyre2
Code No. C1933: Acceleration sensor, Tyre3
Code No. C1943: Acceleration sensor, Tyre4
Code No. C1914: Tyre air pressure sensor, Tyre1
Code No. C1924: Tyre air pressure sensor, Tyre2
Code No. C1934: Tyre air pressure sensor, Tyre3
Code No. C1944: Tyre air pressure sensor, Tyre4
Code No. C1916: Temperature sensor, Tyre1
Code No. C1926: Temperature sensor, Tyre2
Code No. C1936: Temperature sensor, Tyre3
Code No. C1946: Temperature sensor, Tyre4

⚠ CAUTION

- **When diagnosis code No. C1913, C1923, C1933, C1943, C1914, C1924, C1934, C1944, C1916, C1926, C1936 or C1946 is set, be sure to diagnose the CAN bus line.**
- **When replacing the ECU, always check that the communication circuit is normal.**

DIAGNOSIS FUNCTION

Code No. C1913, C1923, C1933, C1943

- The TPMS transmitter detects if the wheel is rotated by the acceleration sensor and sends the signals to ETACS-ECU <Vehicles without KOS> or KOS-ECU. When the TPMS transmitter judges that the acceleration sensor is failed, the failure signal is send to ETACS-ECU <Vehicles without KOS> or KOS-ECU, and ETACS-ECU <Vehicles without KOS> or KOS-ECU sets this code.

Code No. C1914, C1924, C1934, C1944

- The TPMS transmitter detects if the tyre pressure sensor is normal and sends the signal to ETACS-ECU <Vehicles without KOS> or KOS-ECU. When the TPMS transmitter judges that the tyre pressure sensor is failed, the failure signal is send to ETACS-ECU <Vehicles without KOS> or KOS-ECU, and ETACS-ECU <Vehicles without KOS> or KOS-ECU sets this code.

Code No. C1916, C1926, C1936, C1946

- The TPMS transmitter detects if the tyre temperature sensor is normal and sends the signal to ETACS-ECU <Vehicles without KOS> or KOS-ECU. When the TPMS transmitter judges that the tyre temperature sensor is failed, the failure signal is send to ETACS-ECU <Vehicles without KOS> or KOS-ECU, and ETACS-ECU <Vehicles without KOS> or KOS-ECU sets this code.

PROBABLE CAUSES

- Malfunction of CAN bus line
- Low battery that is incorporated into the TPMS transmitter
- Damaged wiring harness and connector
- Malfunction of TPMS transmitter
- Malfunction of ETACS-ECU <Vehicles without KOS> or KOS-ECU

DIAGNOSIS PROCEDURE

STEP 1. M.U.T.-III CAN bus diagnostics

Use M.U.T.-III to diagnose the CAN bus lines.

Q: Is the check result normal?

YES : Go to Step 3.

NO : Repair the CAN bus lines (Refer to GROUP 54C – Troubleshooting). On completion, go to Step 2.

STEP 2. Check whether the diagnosis code is set again.

(1) Turn the ignition switch (engine starting switch) from the "LOCK" (OFF) to "ON" position.

(2) Check if the diagnosis code is set.

Q: Is the diagnosis code set?

YES : Go to Step 3.

NO : The procedure is complete.

STEP 3. Check for TPMS transmitter.

Identify the TPMS transmitter which the diagnosis code is set by TPMS transmitter check (Refer to P.31-26).

NOTE: The TPMS transmitter which cannot be checked may be faulty or the ID code may not be registered, thus do not replace it, but register the ID code. If the transmitter is faulty, it is replaced in the ID code registration process.

Q: Are there any TPMS transmitters which are identified?

YES : Among the checked TPMS transmitters, replace the TPMS transmitters to which the diagnosis code is set. Then register the ID codes (Refer to P.31-26). Then go to Step 4.

NO : Even when no transmitter is checked, register the ID codes (Refer to P.31-26). Then go to Step 4.

STEP 4. Check whether the diagnosis code is set again.

(1) Turn the ignition switch (engine starting switch) from the "LOCK" (OFF) to "ON" position.

(2) Check if the diagnosis code is set.

Q: Is the diagnosis code set?

YES : Replace the KOS-ECU (Refer to GROUP 42B – KOS-ECU P.42B-2) <Vehicles without KOS> or ETACS-ECU (Refer to GROUP 54A – ETACS-ECU P.54A-3) and register the ID codes. Then start over at Step 1.

NO : The procedure is complete.

Code No. C1915: Transmitter OFF mode, Tyre1
Code No. C1925: Transmitter OFF mode, Tyre2
Code No. C1935: Transmitter OFF mode, Tyre3
Code No. C1945: Transmitter OFF mode, Tyre4

⚠ CAUTION
- **When diagnosis code No. C1915, C1925, C1935 or C1945 is set, be sure to diagnose the CAN bus line.**
- **When replacing the ECU, always check that the communication circuit is normal.**

DIAGNOSIS FUNCTION
When the TPMS transmitter(s) is in the OFF mode, this code is set.

PROBABLE CAUSES
- Malfunction of CAN bus line
- OFF mode cancellation not performed
- Damaged wiring harness and connector
- Malfunction of TPMS transmitter
- Malfunction of ETACS-ECU <Vehicles without KOS> or KOS-ECU

DIAGNOSIS PROCEDURE

STEP 1. M.U.T.-III CAN bus diagnostics
Use M.U.T.-III to diagnose the CAN bus lines.

Q: Is the check result normal?
YES : Go to Step 3.
NO : Repair the CAN bus lines (Refer to GROUP 54C – Troubleshooting). On completion, go to Step 2.

STEP 2. Check whether the diagnosis code is set again.
(1) Turn the ignition switch (engine starting switch) from the "LOCK" (OFF) to "ON" position.
(2) Check if the diagnosis code is set.

Q: Is the diagnosis code set?
YES : Go to Step 3.
NO : The procedure is complete.

STEP 3. Diagnosis code check
(1) Drive the vehicle for 5 minutes.
(2) Turn the ignition switch (engine starting switch) from the "LOCK" (OFF) to "ON" position.
(3) Check if the diagnosis code is set.

Q: Are the all diagnosis codes C1915, C1925, C1935, C1945, C1955 set?
YES : Replace the TPMS transmitters of all the four wheels, and register ID codes (Refer to P.31-26). Then go to Step 4.
NO : Register the ID codes (Refer to P.31-26). Then go to Step 4 (The transmitter which is in OFF mode is replaced during ID registration process).

STEP 4. Check whether the diagnosis code is set again.
(1) Turn the ignition switch (engine starting switch) from the "LOCK" (OFF) to "ON" position.
(2) Check if the diagnosis code is set.

Q: Is the diagnosis code set?
YES : Replace the KOS-ECU (Refer to GROUP 42B – KOS-ECU P.42B-2) <Vehicles without KOS> or ETACS-ECU (Refer to GROUP 54A – ETACS-ECU P.54A-3) and register the ID codes. Then start over at Step 1.
NO : The procedure is complete.

TROUBLE SYMPTOM CHART

M1311003100122

⚠ CAUTION

During diagnosis, a diagnosis code associated with another system may be set when the ignition switch (engine starting switch) is turned to the "ON" position with connector(s) disconnected. when diagnosis is finished, check all systems for diagnosis codes. If diagnosis code(s) are set, erase them all.

Trouble symptom	Inspection procedure No.	Reference page
The TPMS warning lamp stays on.	1	P.31-21
The TPMS warning lamp flash for about 1 minute and then remain illuminated.	2	P.31-23

TPMS SYMPTOM PROCEDURES

Inspection Procedure 1: The TPMS warning lamp stays ON.

⚠ CAUTION

- **If there is any problem in the CAN bus lines, an incorrect diagnosis code may be set. Prior to this diagnosis, diagnose the CAN bus lines (Refer to GROUP 54C – CAN Bus Diagnostics Table).**
- **Whenever ECU is replaced, ensure that the CAN bus lines are normal.**

OPERATION

- The TPMS warning lamp will illuminate when the ECU detects that the tyre inflation pressure of road wheel is below 204 kPa or a certain threshold value.
- Furthermore, the TPMS warning lamp illuminates for 3 seconds immediately after the ignition switch (engine starting switch) is turned to the "ON" position. This is a bulb check of the TPMS warning lamp.

COMMENT ON TROUBLE SYMPTOM

This may be caused by faults in the CAN bus line, combination meter or ETACS-ECU <Vehicles without KOS> or KOS-ECU.

PROBABLE CAUSES

- Damaged wiring harness and connectors
- Low tyre inflation pressure
- Punctured tyre
- Damaged tyre valve and/or valve core
- Inaccurate tyre pressure sensor of the TPMS transmitter
- Malfunction of the combination meter
- Malfunction of the ETACS-ECU <Vehicles without KOS> or KOS-ECU

DIAGNOSIS PROCEDURE

STEP 1. Inspect the all tyres.

Visually check road tyres for any sign of air leak or puncture.

Q: Is the check result normal?

YES : Go to Step 2.

NO : Replace the valve or valve core, or repair the flat tyre. Replace the tyre if necessary. Then go to Step 2.

STEP 2. After the tyre inflation pressure is adjusted and the TPMS transmitter sends inflation pressure information on it, check the TPMS warning lamp.

(1) Wait until the tyres cool down, and adjust road tyre inflation pressures to the value specified on the tyre pressure label.
(2) Turn the ignition switch (engine starting switch) from the "LOCK" (OFF) to "ON" position.
(3) Drive the vehicle for 5 minutes.
(4) Check the TPMS warning lamp.

Q: Is the TPMS warning lamp turned off?
YES : The procedure is complete.
NO : Go to Step 3.

STEP 3. Check the tyre inflation pressure again.

Use a tyre pressure gauge to check that road tyre inflation pressures meet the value specified on the tyre pressure label.

Q: Is the check result normal?
YES : Go to Step 4.
NO : Replace the valve or valve core, or repair the damaged tyre. Replace the tyre if necessary. Then return to Step 2.

STEP 4. M.U.T.-III CAN bus diagnostics

Use M.U.T.-III to diagnose the CAN bus lines.

Q: Is the check result normal?
YES : Go to Step 5.
NO : Repair the CAN bus lines (Refer to GROUP 54C – CAN Bus Diagnostics Table). Then go to Step 5.

STEP 5. Check whether the diagnosis code is set.

Use M.U.T.-III to check whether diagnosis code No. C1912, C1922, C1932 or C1942 (Tyre air pressure low) is set.

Q: Is diagnosis code No. C1912, C1922, C1932 or C1942 set?
YES : Carry out troubleshooting for diagnosis codes No. C1912/C1922/C1932/C1942 (Tyre air pressure low) (Refer to P.31-17).
NO : Replace the KOS-ECU (Refer to GROUP 42B – KOS-ECU P.42B-2) <Vehicles without KOS> or ETACS-ECU (Refer to GROUP 54A – ETACS-ECU P.54A-3) and register the ID codes. Then go to Step 6.

STEP 6. Check the TPMS warning lamp.

Q: Does the TPMS warning lamp turn OFF after 3 seconds of initial lamp check?
YES : Go to Step 7.
NO : Replace the combination meter assembly (Refer to GROUP 54A – Combination Meter Assembly). Then go to Step 7.

STEP 7. Retest the system.

Q: Does the TPMS warning lamp turn ON and OFF normally?
YES : The procedure is complete.
NO : Repeat the troubleshooting from Step 1.

Inspection Procedure 2: The TPMS warning lamp flash for about 1 minute and then remain illuminated.

⚠ CAUTION

- **If there is any problem in the CAN bus lines, an incorrect diagnosis code may be set. Prior to this diagnosis, diagnose the CAN bus lines (Refer to GROUP 54C – CAN Bus Diagnostics Table).**
- **Whenever ECU is replaced, ensure that the CAN bus lines are normal.**

OPERATION

- The TPMS warning lamp will flash for about 1 minute and then remain illuminated when a fault has occurred in the TPMS.
- The TPMS warning lamp may also flash for about 1 minute and then remain illuminated when a fault has occurred in the TPMS warning lamp signal circuit (including open circuit and shorted circuit).

COMMENT ON TROUBLE SYMPTOM

- If any TPMS diagnosis codes are set, carry out the relevant troubleshooting.
- This may be caused by faults in the CAN bus line, combination meter or ETACS-ECU <Vehicles without KOS> or KOS-ECU.

PROBABLE CAUSES

- Damaged wiring harness and connectors
- A fault has occurred in the TPMS.
- Malfunction of the combination meter
- Malfunction of the ETACS-ECU <Vehicles without KOS> or KOS-ECU

DIAGNOSIS PROCEDURE

STEP 1. M.U.T.-III CAN bus diagnostics

Use M.U.T.-III to diagnose the CAN bus lines.

Q: Is the check result normal?

YES : Go to Step 2.

NO : Repair the CAN bus lines (Refer to GROUP 54C – CAN Bus Diagnostics Table). Then go to Step 2.

STEP 2. M.U.T.-III CAN bus diagnostics

(1) Turn the ignition switch (engine starting switch) from the "LOCK" (OFF) to "ON" position.
(2) Check whether any TPMS diagnosis code is set.

Q: Is any TPMS diagnosis code set?

YES : Carry out the relevant TPMS troubleshooting (Refer to P.31-10).

NO : Go to Step 3.

STEP 3. Check the combination meter

Check that the combination meter warning lamps and indicators other than TPMS warning lamp illuminate normally.

Q: Is the check result normal?

YES : Replace the KOS-ECU (Refer to GROUP 42B – KOS-ECU P.42B-2) <Vehicles without KOS> or ETACS-ECU (Refer to GROUP 54A – ETACS-ECU P.54A-3) and register the ID codes. Then go to Step 4.

NO : Replace the combination meter assembly (Refer to GROUP 54A – Combination Meter Assembly). Then go to Step 4.

STEP 4. Retest the system

Q: Does the TPMS warning lamp turn ON and OFF normally?

YES : The procedure is complete.

NO : Repeat the troubleshooting from Step 1.

DATA LIST REFERENCE TABLE

M1311003300148

The following items can be read by the M.U.T.-III from the KOS-ECU or the ETACS-ECU <Vehicles without KOS> input data.

Item No.	M.U.T.-III display	Check condition	Normal condition
21	Air pressure, Tyre 1	–	–
22	Air pressure, Tyre 2		
23	Air pressure, Tyre 3		
24	Air pressure, Tyre 4		
31	Acceleration, Tyre 1	–	–
32	Acceleration, Tyre 2		
33	Acceleration, Tyre 3		
34	Acceleration, Tyre 4		
38	Number of registered TPMS ID	–	Number of stored TPMS
39	Ignition signal (CAN data)	ignition switch (engine starting switch): ON	ON
		ignition switch (engine starting switch): OFF	OFF
40	Ignition signal (Port input)	ignition switch (engine starting switch): ON	ON
		ignition switch (engine starting switch): OFF	OFF
41	Vehicle speed sensor	Drive the vehicle (The M.U.T.-III and the speedometer readings are approximately the same)	–
42*	Ambient TEMP.(after filtering)	–	– °C
43*	MIN.ambient TEMP.(after reset)	–	– °C
44*	Adjusted TEMP.lower limit	–	– °C
50	Registered ID reception, Tyre1	Reception	Yes
		No reception	No
51	Registered ID reception, Tyre2	Reception	Yes
		No reception	No
52	Registered ID reception, Tyre3	Reception	Yes
		No reception	No
53	Registered ID reception, Tyre4	Reception	Yes
		No reception	No
61	Air pressure, Tyre1(not adjusted)	–	– kPa
62	Air pressure, Tyre2(not adjusted)		
63	Air pressure, Tyre3(not adjusted)		
64	Air pressure, Tyre4(not adjusted)		
66	Temperature,Tyre1	–	– °C
67	Temperature,Tyre2		
68	Temperature,Tyre3		
69	Temperature,Tyre4		

Item No.	M.U.T.-III display	Check condition	Normal condition
71*	Air pressure,Tyre1 (default)	–	– kPa
72*	Air pressure,Tyre2 (default)		
73*	Air pressure,Tyre3 (default)		
74*	Air pressure,Tyre4 (default)		
76*	Temperature,Tyre1 (default)	–	– °C
77*	Temperature,Tyre2 (default)		
78*	Temperature,Tyre3 (default)		
79*	Temperature,Tyre4 (default)		
81*	Threshold PRS.warning,Tyre1	–	– kPa
83*	Threshold PRS.warning,Tyre2		
85*	Threshold PRS.warning,Tyre3		
87*	Threshold PRS.warning,Tyre4		
82*	Threshold PRS.warning release,T1	–	– kPa
84*	Threshold PRS.warning release,T2		
86*	Threshold PRS.warning release,T3		
88*	Threshold PRS.warning release,T4		
91*	Latest R PRS,Tyre1(not adjusted)	–	– kPa
92*	Latest R PRS,Tyre2(not adjusted)		
93*	Latest R PRS,Tyre3(not adjusted)		
94*	Latest R PRS,Tyre4(not adjusted)		
96*	Latest reception Air PRS.,Tyre1	–	– kPa
97*	Latest reception Air PRS.,Tyre2		
98*	Latest reception Air PRS.,Tyre3		
99*	Latest reception Air PRS.,Tyre4		
101*	Latest reception TEMP,Tyre1	–	– °C
102*	Latest reception TEMP,Tyre2		
103*	Latest reception TEMP,Tyre3		
104*	Latest reception TEMP,Tyre4		

*NOTE: *: Only vehicles with KOS*

CHECK AT ECU TERMINAL

M1311003400123

Refer to GROUP 54A – ETACS, Check at ECU Terminal. <Vehicles without KOS>
Refer to GROUP 42B – Terminal Voltage Reference Chart. <Vehicles with KOS>

ON-VEHICLE SERVICE

TPMS TRANSMITTER CHECK

M1311004000140

According to the following procedures, identify which registered TPMS transmitter corresponds to which wheel, and check the tyre pressure and acceleration value of each TPMS transmitter.

1. Check the data list "Air Pressure, Tyre1, 2, 3, 4" and write down the tyre pressure for all wheels.

   NOTE: The display at this time is the data received most recently.

2. Perform the following procedures for four wheels in order, identify the wheel by checking the tyre pressure of each wheel.
   (1) Change the pressure of tyre for 20 kPa or more so that the TPMS transmitter sends the latest sensor data (The tyre pressure can either be decreased or increased).
   (2) Check the data list screen to determine which tyre number corresponds to the wheel whose tyre pressure has changed.

   NOTE:
   - *It may take approximately one minute that the data of tyre pressure change is displayed on the M.U.T.-III screen.*
   - *If the data of tyre pressure change is not displayed on the M.U.T.-III screen, the most possible cause is that the radio wave sent from the TPMS transmitter cannot be received. In this case, the radio wave may be received by performing the procedures from (1) again after turning the tyre to change the TPMS transmitter position. If the tyre pressure change is still not displayed on the M.U.T.-III screen, the TPMS transmitter in which the ID code is not registered may be installed, or the TPMS transmitter may be faulty. Therefore, perform ID code registration or replace the TPMS transmitter according to the instructions of troubleshooting for diagnosis codes. (At this time, do not register the ID codes or replace the TPMS transmitter.)*

3. Check the tyre pressure or acceleration value shown in the screen (if needed).
4. After checking by the tyre pressure change, adjust the checked tyre pressure to the proper value.

TYRE PRESSURE SENSOR ID REGISTRATION

M1311003900128

- "Tyre Pressure Sensor ID Registration": To enter the ID into Set 1 when the TPMS transmitter or the ETACS-ECU <Vehicles without KOS> or KOS-ECU is replaced.
- "Tyre PRS. Sensor ID Reg.(Set2)": To enter the ID into Set 2 when the TPMS transmitter or the ETACS-ECU <Vehicles without KOS> or KOS-ECU is replaced.

"TYRE PRESSURE SENSOR ID REGISTRATION" METHOD

1. Select "4tyres ID Reg. (Change tyre PRS.)" and start the tyre pressure sensor ID registration.

⚠ CAUTION

Register all tyre pressure sensor IDs within twenty minutes.

2. "4 SNSR ID Registration Do you want to start? Note Finish ID Registration within 20 minutes." is displayed. Then, press "OK."

   NOTE: If the ID code registration is not finished within 20 minutes, all the ID codes registered in the TPMS transmitter before will be erased. For this reason, the ID codes need to be registered again.

3. Decrease the tyre pressure to 204 kPa or less by changing 20 kPa or more, and register the tyre pressure sensor ID code of each wheel to ETACS-ECU <Vehicles without KOS> or KOS-ECU.

NOTE:

- *You can start out the operations from any TPMS transmitter. The tyre pressure sensor ID registration has no order.*
- *On completion of the tyre pressure sensor ID code registration, the tyre pressure sensor ID code is displayed on the M.U.T.-III screen.*
- *M.U.T.-III cannot identify which registered TPMS transmitter is used for each wheel. For this reason, write down the tyre number for each wheel when the tyre number and ID code is displayed on the M.U.T.-III during ID code registration.*
- *It may take approximately one minute for the ID code to be displayed on the M.U.T.-III screen after the tyre pressure is reduced.*
- *If the ID code is not displayed, reduce the tyre pressure another 20 kPa or more. If the ID code is not displayed yet, rotate the tyre to displace the TPMS transmitter, and reduce the tyre pressure 20 kPa or more again.*
- *If the ID code cannot be registered for all the four wheels, the ETACS-ECU or receiver antenna <Vehicles without KOS> or KOS-ECU may be faulty, thus replace the ETACS-ECU or receiver antenna* <Vehicles without KOS> or KOS-ECU.*

**: First, replace receiver antenna and registered ID again. Still if the ID code cannot be registered for all wheels, then replace ETACS-ECU as next step.*

- *If the ID code can be registered for one wheel or more, the TPMS transmitter in which the code cannot be registered may be faulty, thus replace that TPMS transmitter.*

4. "4 SNSR ID Registration Completed." is displayed. Then, select "OK."

   NOTE: The TPMS indicator illuminates for tyre pressure alarm.
5. After 1 minute or more has passed, correct the tyre pressure for all wheels with ignition switch "ON".
6. Check the data list "Registered ID reception, Tyre 1, 2, 3, 4" if "YES" is displayed for each tyre. When "NO" is displayed, drive the vehicle for approximately 5 minutes, check the display again. If "NO" is still displayed, register the ID code again.

"TYRE PRS. SENSOR ID REG.(Set2)" METHOD

Follow "TYRE PRESSURE SENSOR ID REGISTRATION".

TYRE PRESSURE SENSOR ID CHECK

M1311004100103

1. Select "Tyre Pressure Sensor ID Check".

⚠ CAUTION

If two sets of the IDs have been registered, the M.U.T.-III will display the IDs of the wheels which are currently effective in the vehicle.

2. Check the registered tyre pressure sensor IDs on the M.U.T.-III screen.

TYRE PRESSURE MONITORING SYSTEM (TPMS)

TPMS RECEIVER

REMOVAL AND INSTALLATION

M1311003700146

Refer to GROUP 54A – ETACS-ECU P.54A-3 and GROUP 54A – Receiver antenna <Vehicles without KOS> or GROUP 42B – KOS-ECU P.42B-2 <Vehicles with KOS>.

TPMS TRANSMITTER

REMOVAL AND INSTALLATION

M1311003800217

⚠ *WARNING*

Certain components of this vehicle, such as TPMS transmitter may contain perchlorate materials. Before deployment and/or disposal of these components, review and comply with all applicable local regulations.

⚠ CAUTION

- **Do not vary the angle of valve except at mounting on the rim.**
- **Ensure valve cap is always in place except when adjusting tyre pressure.**
- **If the valve core and valve cap are replaced, use a genuine replacement part. The valve core is similar to a conventional one, but uses nickel plating to avoid corrosion.**
- **Replace the seal washer with a new one every five years or when the tyre is replaced.**
- **Do not drop the TPMS transmitter from height greater than 1 meter.**
- **Do not expose the TPMS transmitter to extraneous magnetic fields.**
- **TPMS transmitter should not be stored at temperatures above 80°C.**
- **TPMS transmitter should not be exposed to temperatures above 100°C.**
- **If the TPMS transmitter is replaced, execute "Tyre Pressure Sensor ID Registration" on M.U.T.-III "Special Function."**
- **Be careful not to damage the TPMS transmitter.**

Pre-removal Operation	Post-installation Operation
• Wheel and Tyre Removal	• Wheel and Tyre Installation • Tyre Pressure Sensor ID Registration If a new TPMS transmitter is installed (Refer to P.31-26). • After the tyre pressure sensor ID registration, check that the TPMS warning lamp does not illuminate or flash.

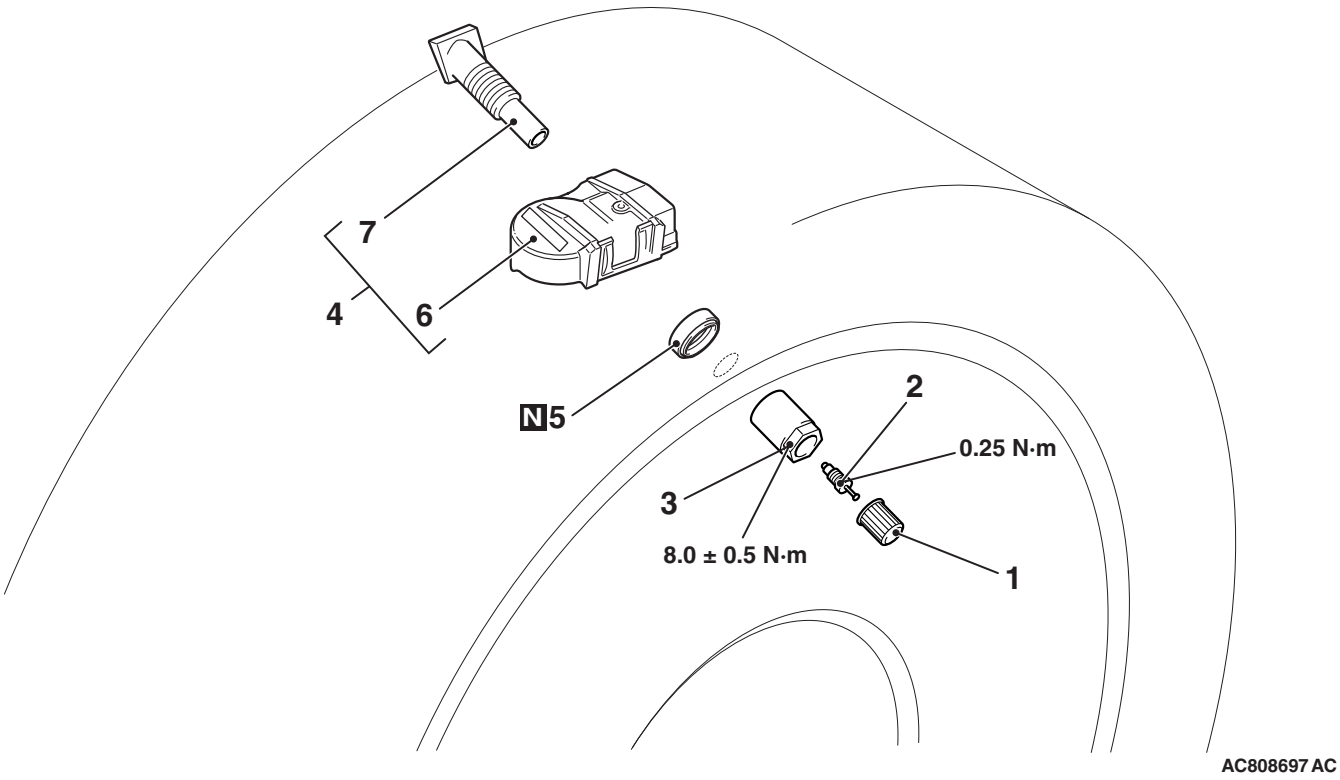

Removal steps

<<A>> 1. Cap
<<A>> 2. Valve core
<<A>> 3. Nut
- Let TPMS transmitter fall into tyre
- Tyre bead

<<B>> 4. TPMS transmitter
<<C>> 5. Seal washer
6. Housing <In case of removing the valve>
<<C>> 7. Valve <In case of removing the valve>

Installation steps

>>A<< 7. Valve <In case of installing the valve>
6. Housing <In case of installing the valve>
>>A<< 5. Seal washer
>>A<< 4. TPMS transmitter
>>A<< 3. Nut
>>B<< - Tyre bead mounting
2. Valve core

Installation steps

>>C<< - Tyre pressure inflation
>>C<< - Valve nut retightening
1. Cap

REMOVAL SERVICE POINTS

<<A>> CAP/VALVE CORE/NUT REMOVAL

⚠ CAUTION

Ensure cap is always in place except when adjusting tyre pressure.

1. Remove the valve cap.
2. Rotate tyre so that valve stem is in the 6 o'clock position.
3. Use a long-reach 17.2 mm socket to unscrew the valve nut a few turns. Slowly push valve stem into tyre so that tyre pressure is relieved.
4. Once tyre pressure is released, remove nut and let TPMS transmitter fall into tyre.

<<B>> TPMS TRANSMITTER REMOVAL

⚠ CAUTION

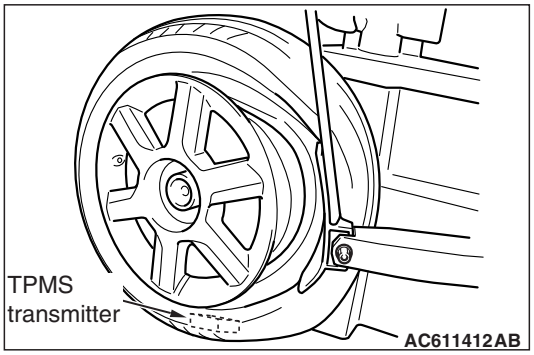

Be careful not to damage the TPMS transmitter.

1. Place on tyre changing machine and break both tyre beads ensuring that the TPMS transmitter remains in the bottom of the tyre.
2. Lubricate tyre well and remove outer side of the tyre.
3. Reach inside the tyre and remove the TPMS transmitter.
4. Remove tyre from rim using proper tyre changing equipment procedures.

<<C>> SEAL WASHER/VALVE REMOVAL

⚠ CAUTION

Remove the seal washer to prevent scratching the valve of the TPMS transmitter.

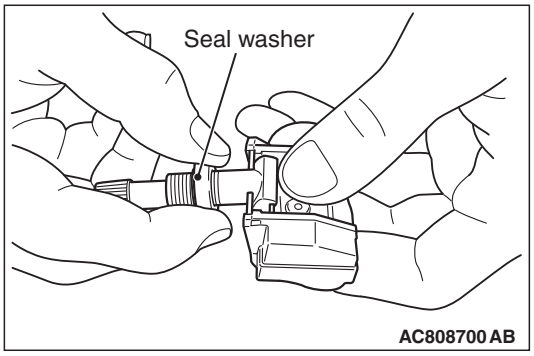

1. Hold the TPMS transmitter and the seal washer, then extract the seal washer. Take care to not damage the valve thread.

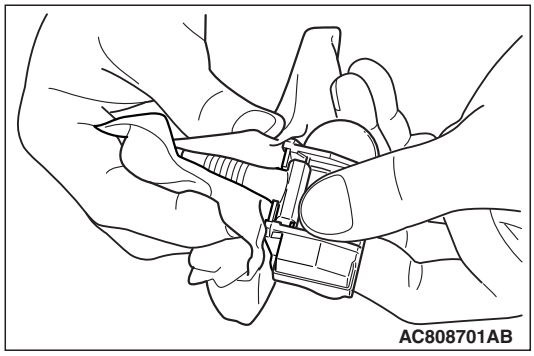

2. Clean the TPMS transmitter and the valve stem.
   <In case of not removing the valve>

   NOTE: If the valve comes out from transmitter, install it to where it was. (This is not failure)

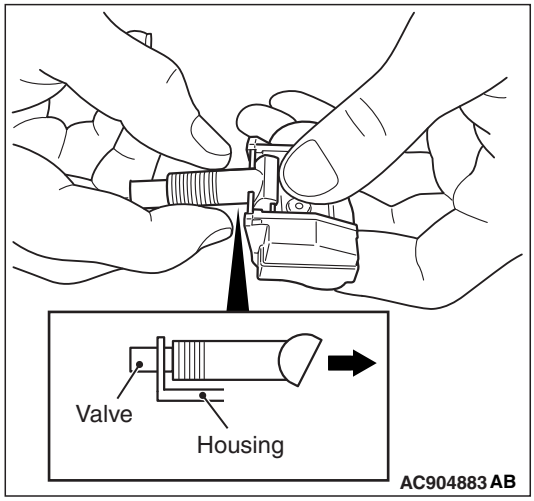

3. Removal the valve from housing as shown.

INSTALLATION SERVICE POINTS

>>A<< VALVE/SEAL WASHER/TPMS TRANSMITTER/NUT INSTALLATION

⚠ CAUTION

Install the seal washer to prevent scratching the valve of the TPMS transmitter.

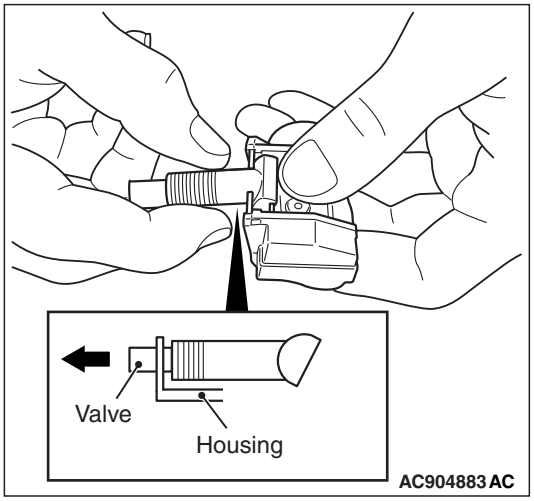

1. Install the valve to housing as shown.

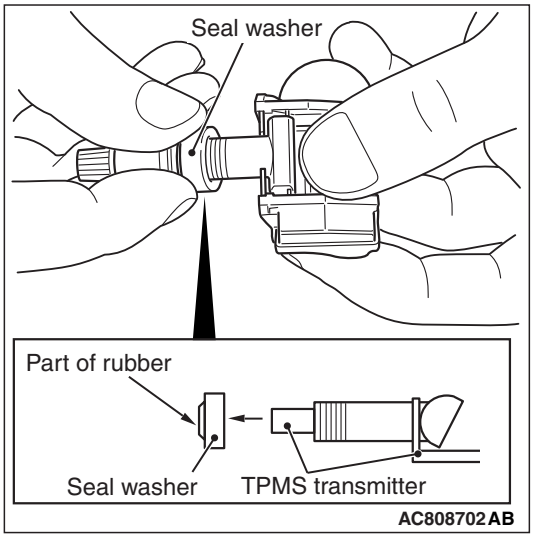

2. Insert the seal washer up to the base of the TPMS transmitter, making sure to secure the valve base with a thumb as shown.

   Wipe the seal and threading.

⚠ CAUTION

- **Visually check that TPMS transmitter is not deformed or damaged.**
- **When installing the TPMS transmitter, be sure the rim, seal valve and nut are clean.**
- **Ensure the grommet is located inside the valve hole before installing the nut.**
- **While installing the nut, push the TPMS transmitter to maintain the lower lip of the transmitter case is in contact with the rim without clearance.**
- **While installing the valve nut, ensure the tool is kept aligned to the valve and the valve hole.**

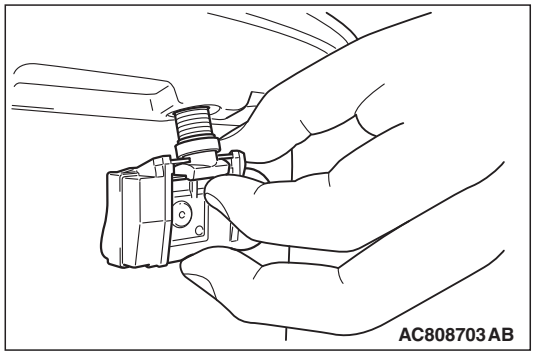

3. Install the valve, in the valve hole, without modifying the angle of the stem (retain position of delivery). The laser marking should be visible at the operator.

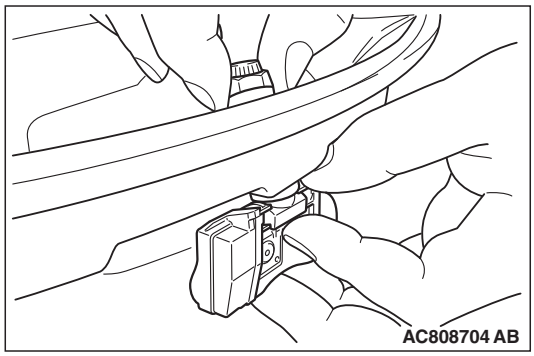

4. When the valve is completely inserted, maintain the TPMS transmitter in contact with the rim, then screw manually the nut until the contact with the wheel.

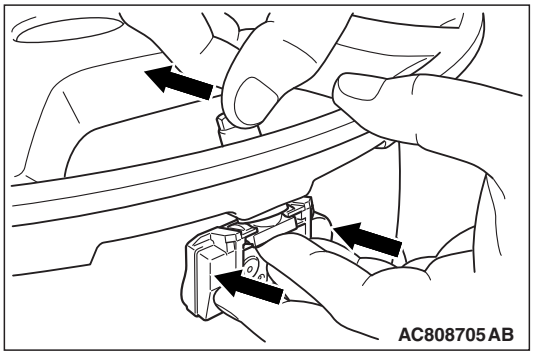

5. While maintaining the TPMS transmitter contact with the rim by applying pressure to the back of the valve, slightly press on the cap to wards the centre of the wheel in order to adapt the angle of the valve/TPMS transmitter to the profile of the rim.

   It is mandatory to guarantee the contact of the housing unit on the rim drop centre.

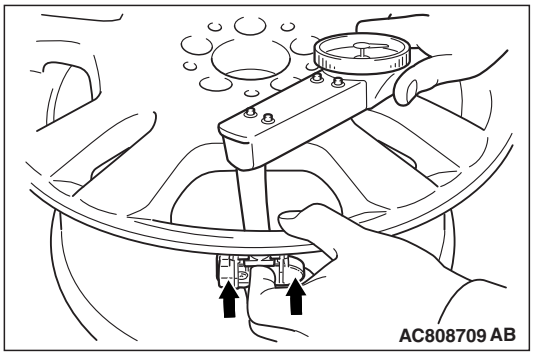

6. While maintaining the TPMS transmitter and valve in position, screw the nut with a torque wrench.

   Take care that the wrench socket is correctly inserted on the nut.

   Specified torque: 8.0 ± 0.5 N·m

>>B<< TYRE BEAD MOUNTING

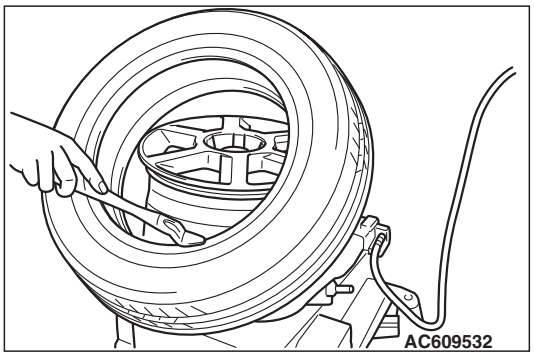

1. Prepare the tyre and fix the rim as usual.

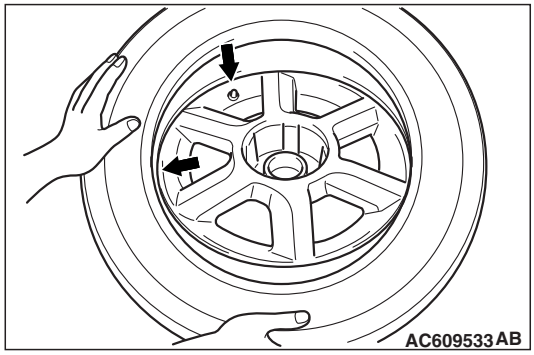

2. Put the tyre on the rim, so that the cross point of the belt with the rim is approximately 20 cm away from the valve.

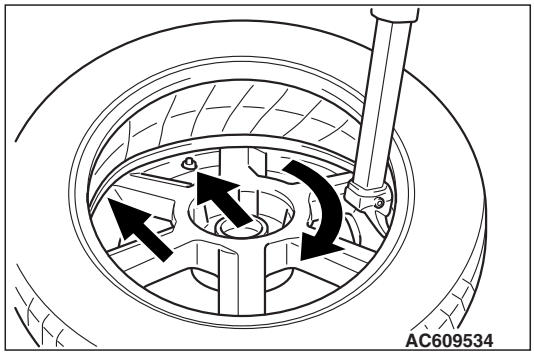

3. Engage the shoe and make sure that 20 cm is maintained between the cross point and the valve.

   The arrow shows the direction of rotation of the wheel.

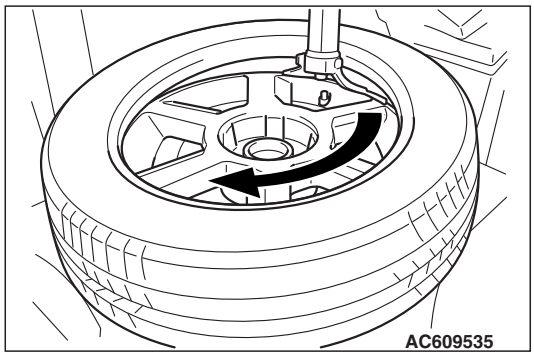

4. Turn the wheel in order to engage all the first side of the tyre.

   NOTE: The standard shoes can pass over the sensor without damaging it.

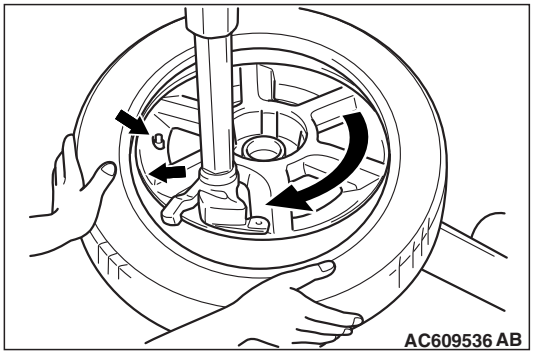

5. Put the second side of the tyre in position, so that the cross point of the belt with the rim is approximately 20 cm away from the valve. The curved arrow shows the direction of rotation of the wheel.

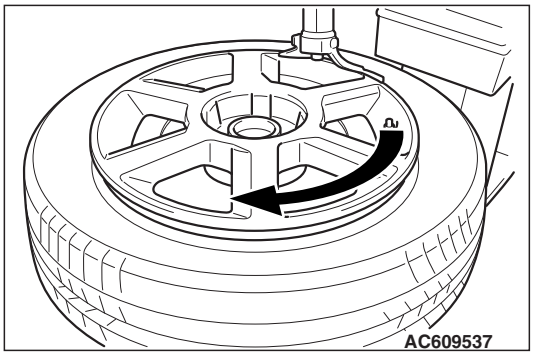

6. Turn the wheel in order to engage all of the second side of the tyre.

   NOTE: The standard shoes can pass over the sensor without damaging it.

>>C<< TYRE PRESSURE INFLATION/NUT RETIGHTENING

⚠ CAUTION

After tyre inflation, retighten the valve nut to 8.0 ± 0.5 N·m. This is necessary, because the TPMS transmitter is secured to the wheel with the valve nut and rubber grommet. The rubber grommet will be depressed by tyre pressure or deteriorate over a period of time, which requires the valve nut to be retightened.

Inflate tyre to required pressure, then retorque the valve nut to 8.0 ± 0.5 N·m.

NOTES

GROUP 42

BODY

CONTENTS

BODY 42A

KEYLESS OPERATION SYSTEM (KOS) 42B

NOTES

GROUP 42A

BODY

CONTENTS

GENERAL INFORMATION 42A-2

GENERAL INFORMATION

M1421000101533

OUTLINE OF CHANGES

- Damper B in the "HOOD" section has been changed from optional equipment to standard equipment.
- The rear splash shield (rear body side) in the "SPLASH SHIELD" section has been changed from optional equipment to standard equipment.

GROUP 42B

KEYLESS OPERATION SYSTEM (KOS)

CONTENTS

GENERAL INFORMATION 42B-2
KOS-ECU 42B-2
REMOVAL AND INSTALLATION 42B-2

GENERAL INFORMATION

M1429600100666

OUTLINE OF CHANGE

Due to the adoption of tyre pressure monitoring system (TPMS), the KOS-ECU removal/installation procedure has been changed.<Vehicles with TPMS>

NOTE: Refer to GROUP 31 – WHEEL AND TYRE about the contents of TPMS.

KOS-ECU

REMOVAL AND INSTALLATION

M1429605900537

⚠ CAUTION

If KOS-ECU is replaced, refer to ID code registration procedure manual to complete the registration of each ID code.

The removal and installation procedure is the same as before.

GROUP 51

EXTERIOR

CONTENTS

GENERAL INFORMATION 51-2

GENERAL INFORMATION

M1511000103234

OUTLINE OF CHANGES <Vehicles for Argentina and South Africa>

- The shape of the wiper blade assembly in the "windshield wiper" section has been changed for Europe and Russia.
- Engine room under cover front B in the "under cover" section has been changed for diesel-powered vehicles.

GROUP 54A

CHASSIS ELECTRICAL

CONTENTS

COMBINATION METER 54A-2

GENERAL INFORMATION. 54A-2

TROUBLESHOOTING 54A-2

CHECK PROCEDURE FOR EACH MULTI INFORMATION DISPLAY SCREEN <HIGH CONTRAST METER>. 54A-2

ETACS 54A-3

GENERAL INFORMATION 54A-3

ETACS-ECU 54A-3

REMOVAL AND INSTALLATION 54A-3

COMBINATION METER

GENERAL INFORMATION

M1540208401185

OUTLINE OF CHANGE

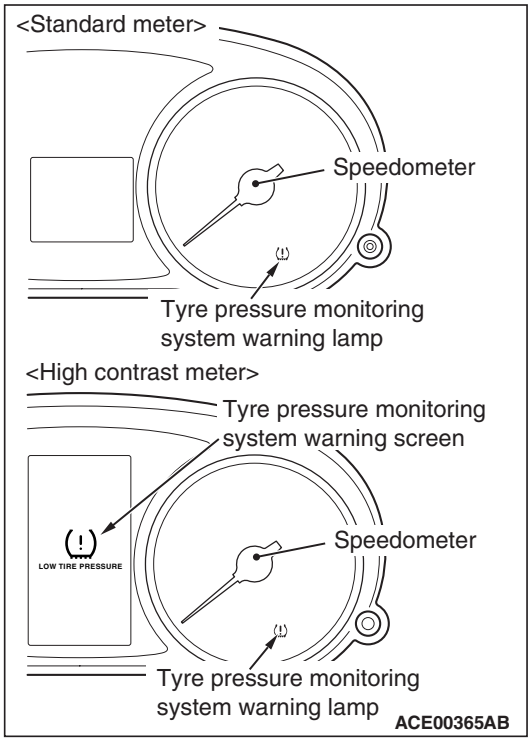

Due to the adoption of tyre pressure monitoring system (TPMS), tyre pressure monitoring system warning lamp and warning screen have been added.
<Vehicles with TPMS>

TROUBLESHOOTING

CHECK PROCEDURE FOR EACH MULTI INFORMATION DISPLAY SCREEN <HIGH CONTRAST METER>

M1540201901305

⚠ CAUTION

When there are TV towers, substations, or broadcasting stations which emit strong radio waves in proximity, on rare occasions, a warning is displayed on the multi information screen for a few seconds. This is caused by the reception of strong radio waves, and there is no functional problem.

WARNING SCREEN

When malfunctions occur to the vehicle, the following warning screens are displayed. If these screens are not displayed normally or if they continue to be displayed even after the factor is eliminated, take measures according to the action procedure.

Display content	Message	Factor	Action procedure
 AC809643	LOW TIRE PRESSURE	Displayed when the tyre air pressure is an abnormality. (except spare tyre)	If the warning screen is not displayed normally or erased, carry out the troubleshooting for the TPMS (Refer to GROUP 31, Diagnosis P.31-10).
 AC809643	TPMS SERVICE REQUIRED	Displayed when the TPMS is an abnormality.	

ETACS

GENERAL INFORMATION

M1545000100984

OUTLINE OF CHANGE

Due to the adoption of tyre pressure monitoring system (TPMS), the ETACS-ECU removal/installation procedure has been changed.<Vehicles with TPMS>

NOTE: Refer to GROUP 31 – WHEEL AND TYRE about the contents of TPMS.

ETACS-ECU

REMOVAL AND INSTALLATION

M1545004700632

⚠ CAUTION

- **When the ETACS-ECU of vehicles without KOS is replaced, the ignition key encrypted code and the tyre pressure sensor ID of the tyre pressure monitoring system must be registered (if the encrypted code is not registered, the engine cannot be started). For the details of code registration procedure, refer to the ID registration procedure manual.**
- **When the ETACS-ECU is replaced, chassis number writing and coding must be performed. When diagnosis code No.B1761 "Chassis No. not programmed" or No.B222C "Coding not completed" is set in the ETACS-ECU, perform chassis number writing and coding. Refer to the "M.U.T.-III operation manual" and perform coding.**
- **When the ETACS-ECU is replaced, initialise the ETACS-ECU (headlamp automatic levelling system) using M.U.T.-III.**

The removal and installation procedure is the same as before.

NOTES

GROUP 70

COMPONENT LOCATIONS

CONTENTS

SENSOR. 70-2

SENSOR

M1701000603771

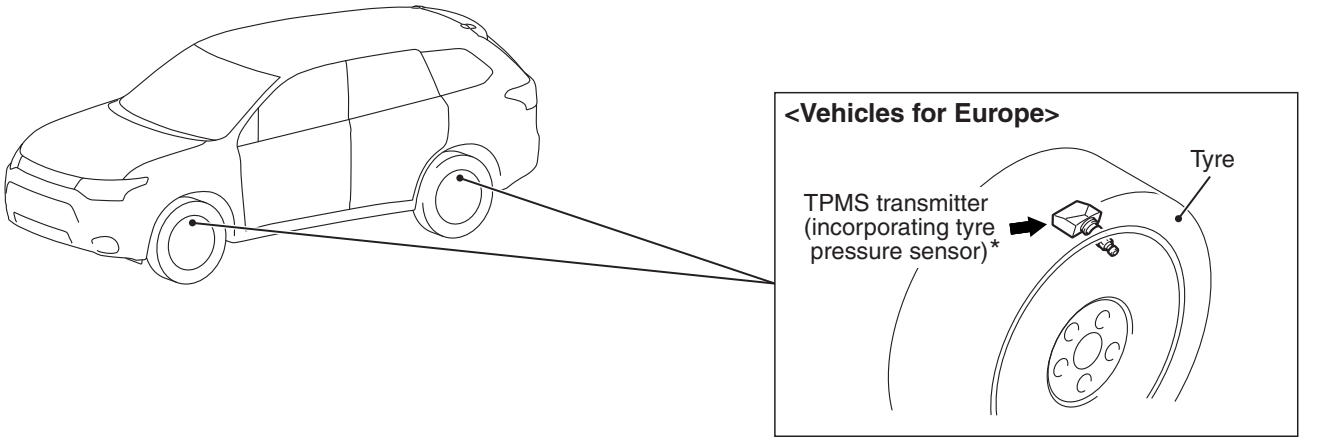

ACD04446AB

*NOTE: *: also installed at the right side.*

GROUP 90

CIRCUIT DIAGRAMS

CONTENTS

TYRE PRESSURE MONITORING SYSTEM (TPMS) 90-2

TYRE PRESSURE MONITORING SYSTEM (TPMS) <LHD> 90-2
TYRE PRESSURE MONITORING SYSTEM (TPMS) <RHD> 90-4

TYRE PRESSURE MONITORING SYSTEM (TPMS)

TYRE PRESSURE MONITORING SYSTEM (TPMS) <LHD>

M1901003901296

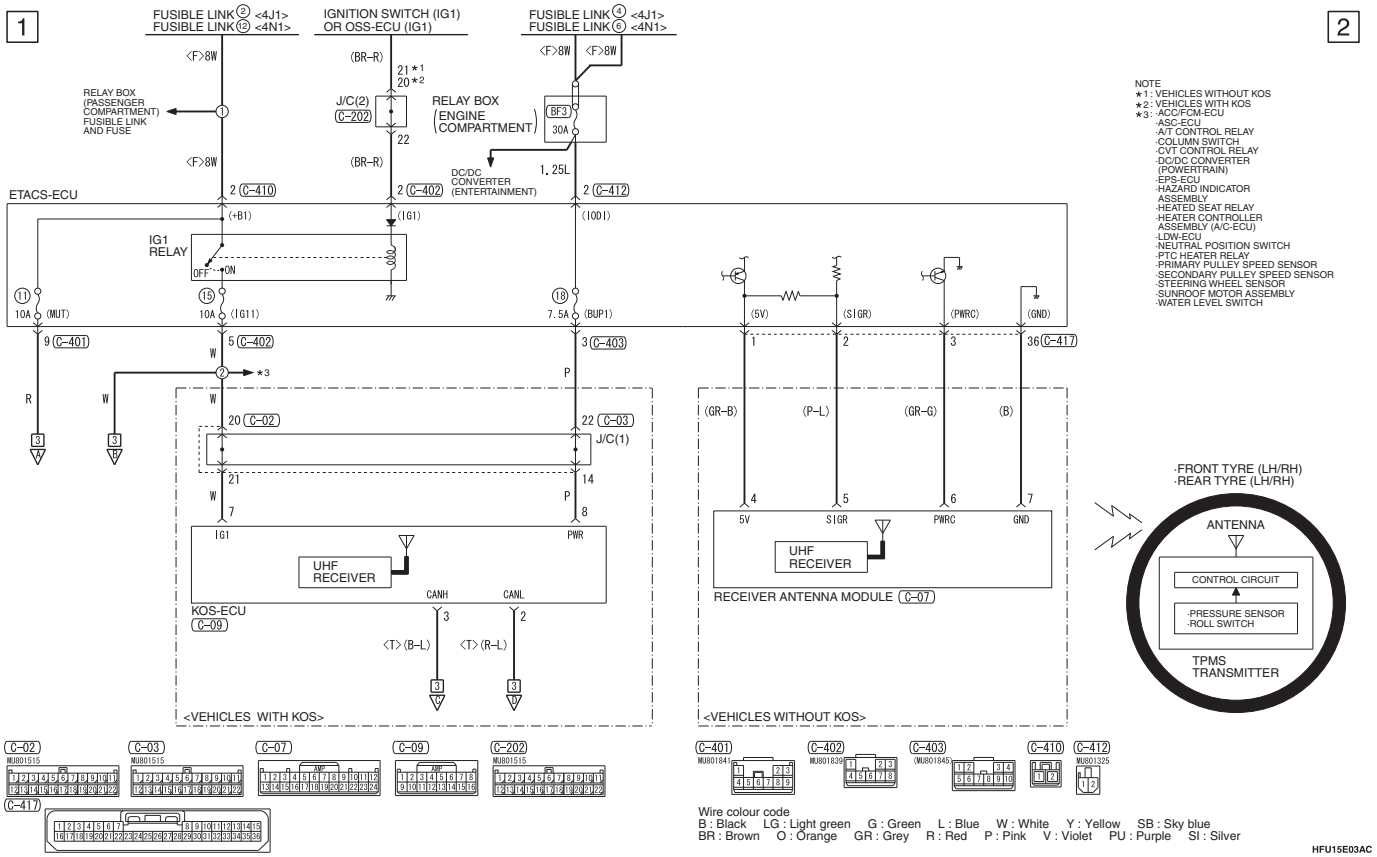

TYRE PRESSURE MONITORING SYSTEM (TPMS) <LHD> (CONTINUED)

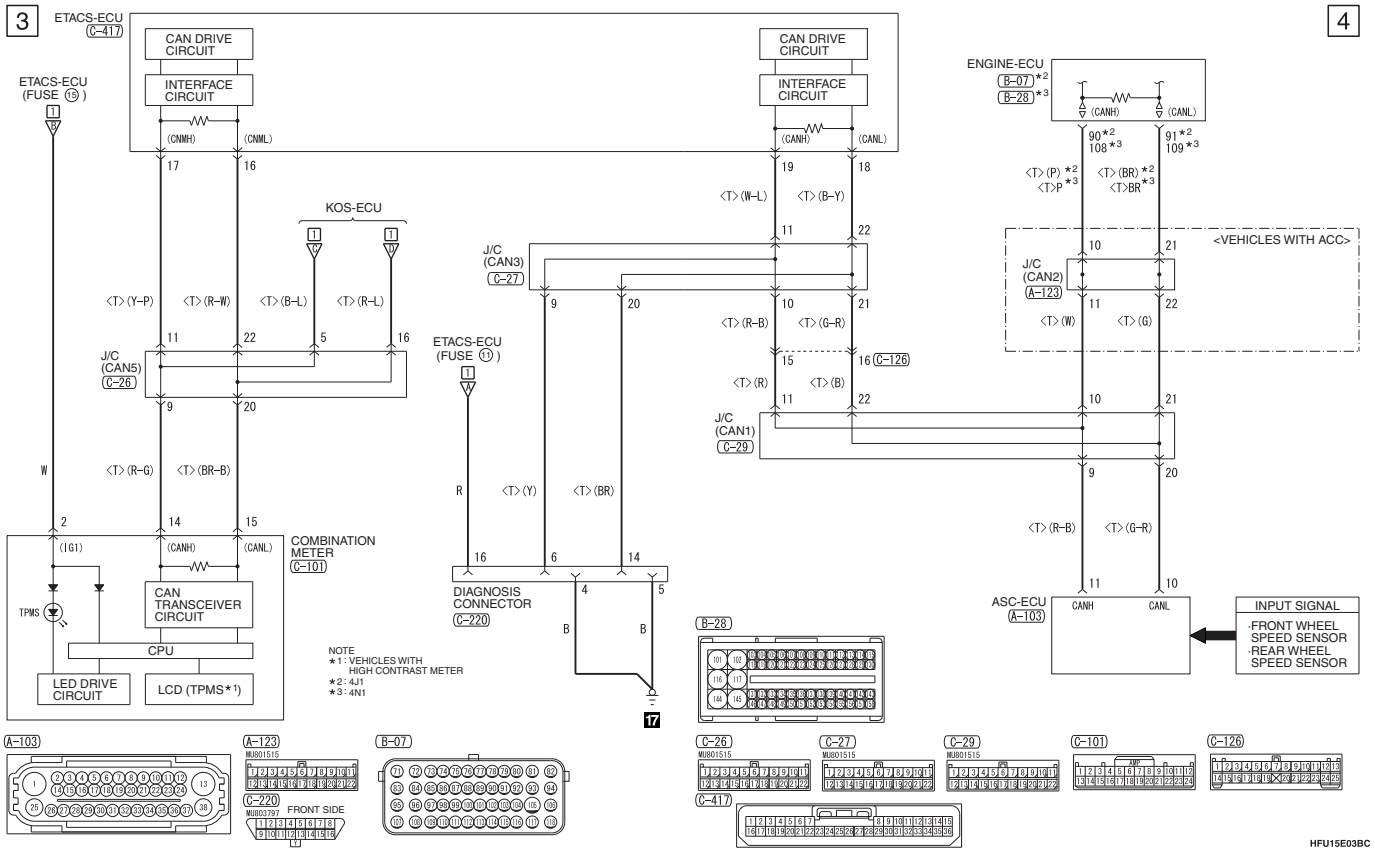

TYRE PRESSURE MONITORING SYSTEM (TPMS) <RHD>

M1901003901304

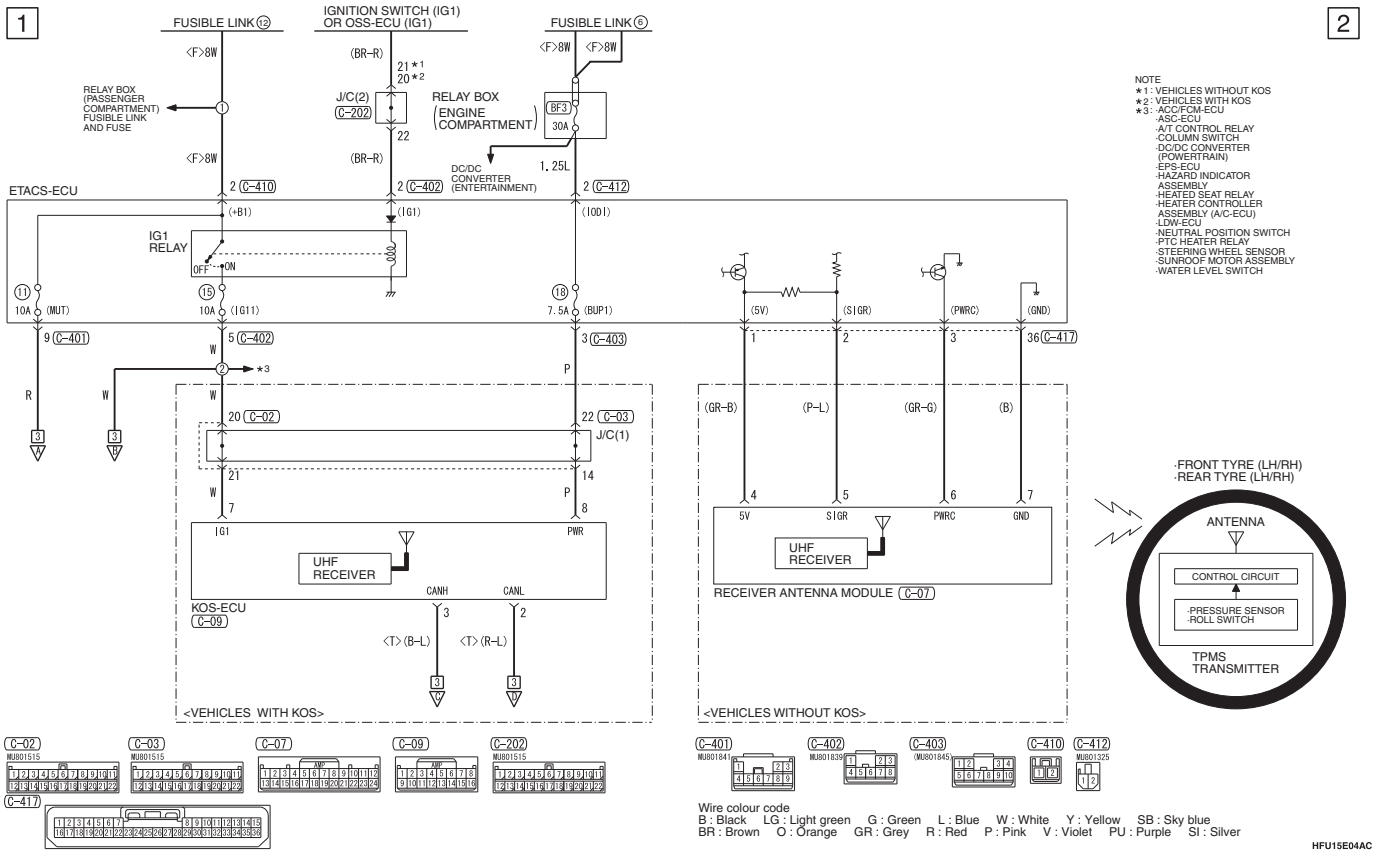

TYRE PRESSURE MONITORING SYSTEM (TPMS) <RHD> (CONTINUED)

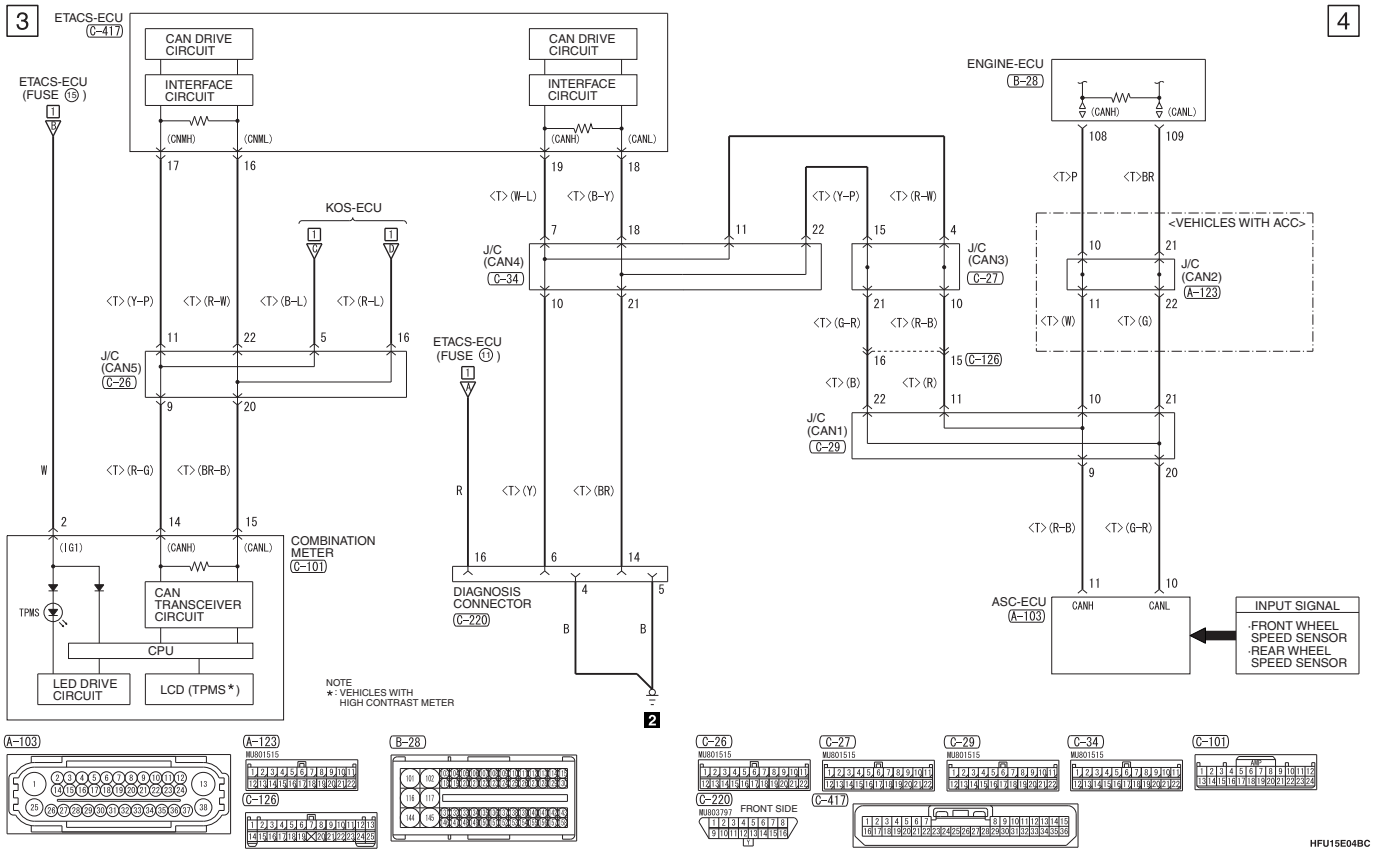

NOTES

GROUP 0

GENERAL

CONTENTS

HOW TO USE THIS MANUAL 0-2

PRECAUTIONS BEFORE SERVICE 0-2

- PROTECTING THE VEHICLE 0-2
- DOING SERVICE WORK IN GROUPS OF TWO OR MORE MECHANICS 0-2
- REMOVAL AND DISASSEMBLY 0-2
- SPECIAL TOOLS 0-3
- PARTS TO BE REPLACED 0-3
- PARTS 0-3
- TUBES AND OTHER RUBBER PARTS 0-3
- LUBRICANTS 0-3
- BRAKE FLUID 0-4
- SERVICING THE ELECTRICAL SYSTEM 0-4
- APPLICATION OF ANTI-CORROSION AGENTS AND UNDERCOATS 0-4
- PRE-INSPECTION CONDITION 0-4
- VEHICLE WASHING 0-4
- MULTI USE TESTER (M.U.T.-III) SUB ASSEMBLY 0-5
- IN ORDER TO PREVENT VEHICLES FROM FIRE 0-5
- ENGINE OILS 0-5

HOW TO USE THIS MANUAL

M6000000100026

This manual contains Pre-delivery inspection and Periodic inspection and maintenance.

Group 0 and 1 have the contents for all vehicle models, and Group 2 has contents for the relevant vehicle models.

PRECAUTIONS BEFORE SERVICE

PROTECTING THE VEHICLE

M6001000100029

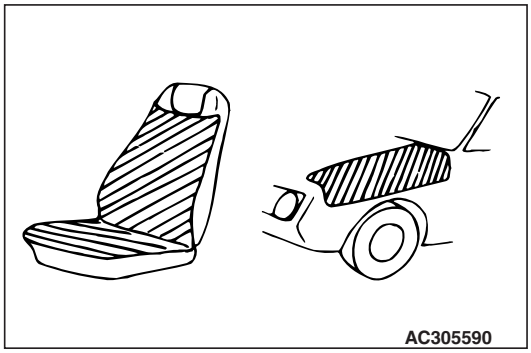

If there is a likelihood of damaging interior or exterior parts during service operations, protect them with suitable covers (such as seat covers, fender covers, etc.).

DOING SERVICE WORK IN GROUPS OF TWO OR MORE MECHANICS

M6001000200026

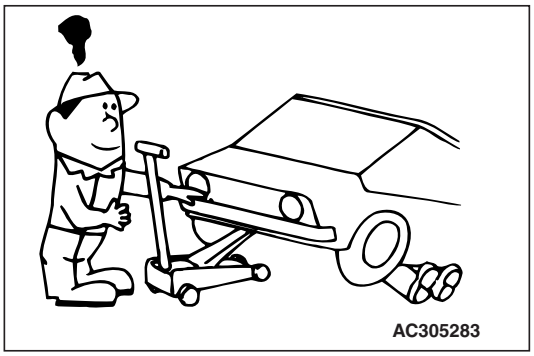

If the service work is to be done by two or more mechanics working together, all the mechanics involved should take safety into consideration while they work.

REMOVAL AND DISASSEMBLY

M6001000300023



When checking a malfunction, find the cause of the problem. If it is determined that removal and/or disassembly is necessary, perform the work by following the procedures contained in this manual.

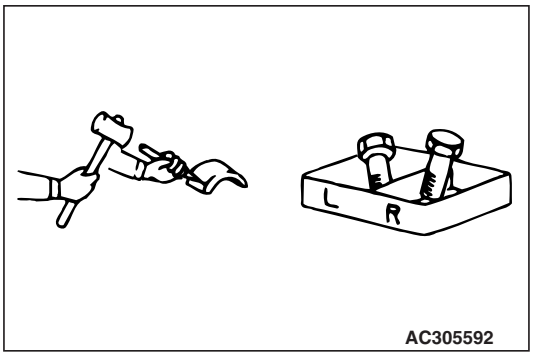

If punch marks or mating marks are made to avoid error in assembly and facilitate the assembly work, be sure to make them in locations which will have no detrimental effect on performance and/or appearance. If an area having many parts, similar parts, and/or parts which are symmetrical right and left is disassembled, be sure to arrange the parts so that they do not become mixed during the assembly process.

1. Arrange the parts removed in the proper order.
2. Determine which parts are to be reused and which are to be replaced.
3. If bolts, nuts, etc., are to be replaced, be sure to use only the exact size specified.

SPECIAL TOOLS

M6001000400031

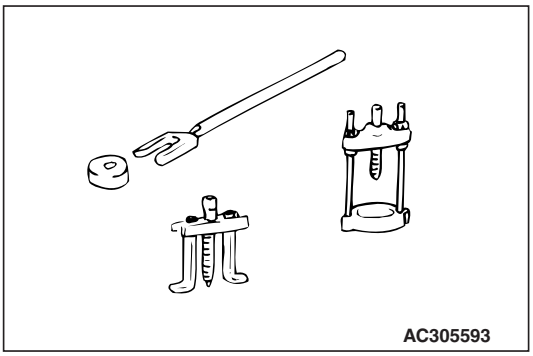

If other tools are substituted for the special tools to do service of repair work, there is the danger that vehicle parts might be damaged, or the technician might be injured; therefore, be sure to use the special tool whenever doing any work for which the use of one is specified.

PARTS TO BE REPLACED

M6001000500027

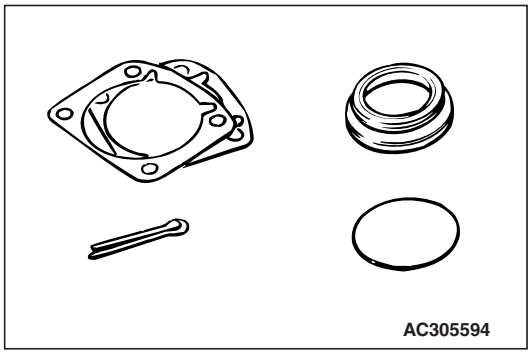

If any of the following parts are removed, they must be replaced with new parts.

- Oil seals
- Gaskets (except rocker cover gasket)
- Packings
- O-rings
- Lock washers
- Split pins
- Self-locking nuts

PARTS

M6001000600024

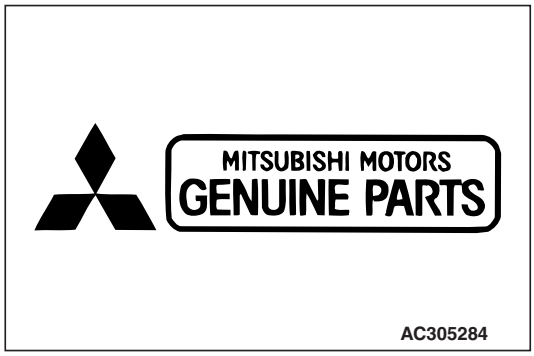

When replacing parts, use MITSUBISHI MOTORS genuine parts.

TUBES AND OTHER RUBBER PARTS

M6001000700021

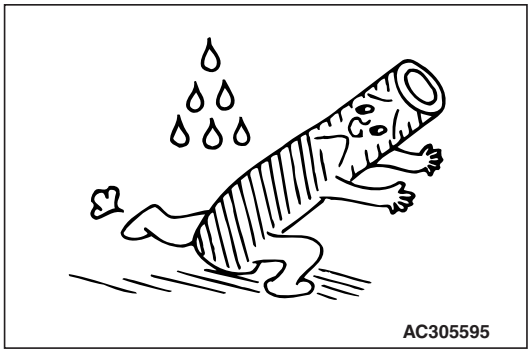

Be careful to avoid spilling any petrol, oil, etc., because if it adheres to any tubes or other rubber parts, they might be adversely affected.

LUBRICANTS

M6001000800028

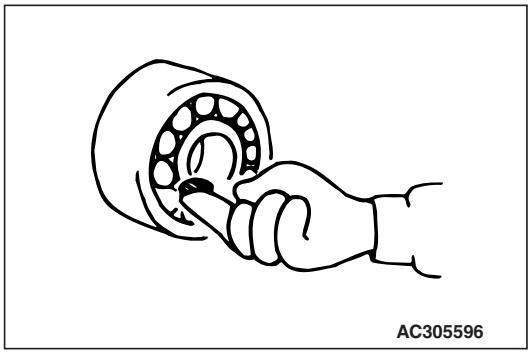

In accordance with the instructions in this manual, apply the specified lubricants in the specified locations during assembly and installation.

BRAKE FLUID

M6001000900025

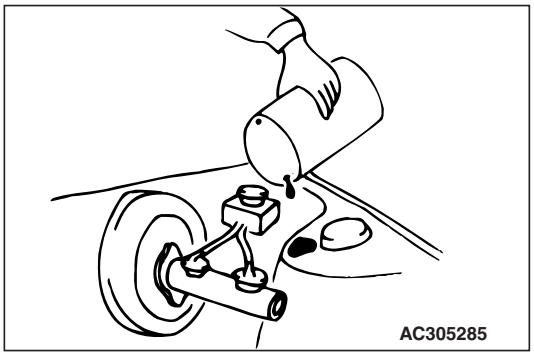

Be careful to avoid spilling any brake fluid, because if it adheres to the vehicle body, the paint coat might be discoloured.

SERVICING THE ELECTRICAL SYSTEM

M6001001000081

⚠ CAUTION

Before connecting or disconnecting the negative (-) cable, be sure to turn off the ignition switch and the lighting switch. (If this is not done, there is the possibility of semiconductor parts being damaged.)

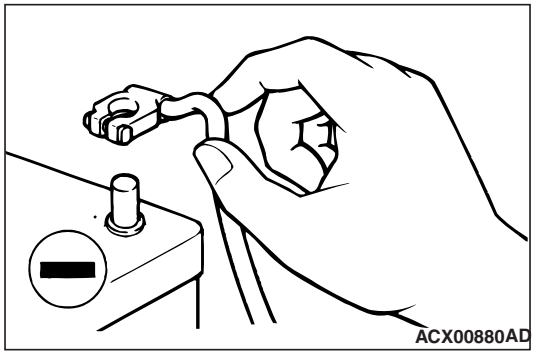

Before replacing a component related to the electrical system and before undertaking any repair procedures involving the electrical system, be sure to first disconnect the negative (-) cable from the battery in order to avoid damage caused by short-circuiting.

APPLICATION OF ANTI-CORROSION AGENTS AND UNDERCOATS

M6001001100022

If oil or grease gets onto the oxygen sensor, it will cause a drop in the performance of the sensor. Cover the oxygen sensor with a protective cover when applying anti-corrosion agents and undercoats.

PRE-INSPECTION CONDITION

M6001001200182

"Pre-inspection condition" refers to the condition that the vehicle must be in before proper engine inspection can be carried out. If you see the words "Set the vehicle to the pre-inspection condition". In this manual, it means to set the vehicle to the following condition.

- Engine coolant temperature: 80 to 90°C
- Lamps, electric cooling fan and all accessories: OFF
- M/T: Neutral
- A/T, CVT: P range

VEHICLE WASHING

M6001001300082

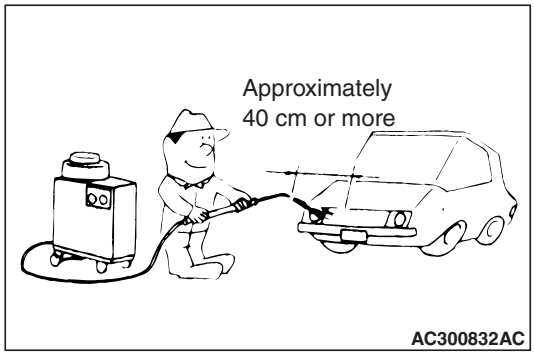

If high-pressure car-washing equipment or steam car-washing equipment is used to wash the vehicle, be sure to note the following information in order to avoid damage to plastic components, etc.

- Spray nozzle distance: Approximately 40 cm or more
- Spray pressure: 3,900 kPa or less
- Spray temperature: 82°C or less
- Time of concentrated spray to one point: within 30 sec.

MULTI USE TESTER (M.U.T.-III) SUB ASSEMBLY

M6001001900169

Refer to the "M.U.T.-III OPERATING INSTRUCTIONS" for instructions on handling the M.U.T.-III.

⚠ CAUTION

Turn the ignition switch to the LOCK (OFF) position before connecting or disconnecting the M.U.T.-III.

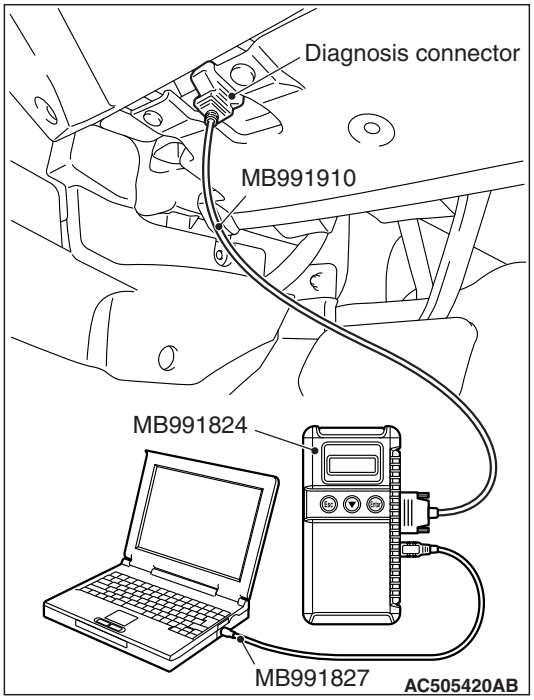

Connect the M.U.T.-III to the diagnosis connector as shown in the illustration.

IN ORDER TO PREVENT VEHICLES FROM FIRE

M6001001500064

"Improper installation of electrical or fuel related parts could cause a fire. In order to retain the high quality and safety of the vehicle, it is important that any accessories that may be fitted or modifications/repairs that may be carried out which involve the electrical or fuel systems, must be carried out in accordance with MMC's information/Instructions".

ENGINE OILS

M6001001600209

HEALTH WARNING

Prolonged and repeated contact with mineral oil will result in the removal of natural fats from the skin, leading to dryness, irritation and dermatitis. In addition, used engine oil contains potentially harmful contaminants which may cause skin cancer. Adequate means of skin protection and washing facilities must be provided.

RECOMMENDED PRECAUTIONS

The most effective precaution is to adapt working practices which prevent, as far as practicable, the risk of skin contact with mineral oils, for example by using enclosed systems for handling used engine oil and by degreasing components, where practicable, before handling them.

Other precautions:

- Avoid prolonged and repeated contact with oils, particularly used engine oils.
- Wear protective clothing, including impervious gloves where practicable.
- Avoid contaminating clothes, particularly underpants, with oil.
- Do not put oily rags in pockets, the use of overalls without pockets will avoid this.
- Do not wear heavily soiled clothing and oil-impregnated foot-wear. Overalls must be cleaned regularly and kept separately from personal clothing.
- Where there is a risk of eye contact, eye protection should be worn, for example, chemical goggles or face shields; in addition an eye wash facility should be provided.
- Obtain first aid treatment immediately for open cuts and wounds.
- Wash regularly with soap and water to ensure all oil is removed, especially before meals (skin cleansers and nail brushes will help). After cleaning, the application of preparations containing lanolin to replace the natural skin oils is advised.
- Do not use petrol, kerosine, diesel fuel, gas oil, thinners or solvents for cleaning skin.
- Use barrier creams, applying them before each work period, to help the removal of oil from the skin after work.
- If skin disorders develop, obtain medical advice without delay.

NOTES

GROUP 1

PRE-DELIVERY INSPECTION

CONTENTS

NOTES CONCERNING ENTRIES 1-3

PAINTWORK TERMS 1-5

FIRST STEP 1-6

1. CONNECTION OF DARK CURRENT CONNECTOR 1-6

BODY 1-8

2. WRAP FILM 1-8
3. WHEEL 1-13
4. EXTERIOR 1-13
5. OPERATION OF DOOR LOCKING SYSTEMS AND DOOR HINGES. 1-13
6. OPERATION OF DOOR MIRRORS, WINDOWS AND SUNROOF 1-14

UNDER HOOD 1-14

7. ENGINE OIL LEVEL 1-14
8. BRAKE MASTER CYLINDER FLUID LEVEL 1-14
9. CLUTCH MASTER CYLINDER FLUID LEVEL 1-15
10. WASHER FLUID LEVEL. 1-15
11. BATTERY CONDITION AND CONNECTIONS. 1-15
12. POWER STEERING FLUID LEVEL. 1-15
13. ELECTRICAL WIRING 1-15

UNDER VEHICLE 1-16

14. TYRE AND SPARE TYRE PRESSURES 1-16
15. SUSPENSION SYSTEM 1-16
16. STEERING LINKAGE AND SPLIT PINS. 1-16
17. UNDER BODY. 1-17

BEFORE ROAD TEST 1-17

18. SEAT ADJUSTERS AND SEATBACK LATCHES 1-17
19. INHIBITOR SWITCH 1-17
20. IDLE CONTROL KNOB. 1-17
21. INSTRUMENT PANEL CONTROLS. 1-17
22. METERS, GAUGES, WARNING LAMPS AND INDICATION LAMPS. 1-17
23. AIR CONDITIONER, HEATER AND DEFROSTER SYSTEM 1-17
24. WIPERS AND WASHERS. 1-18
25. OPERATION OF SERVICE BRAKES AND PARKING BRAKES. 1-18
26. CLUTCH OPERATION 1-18
27. OPERATION OF SEAT BELTS, SHOULDER BELTS AND RETRACTORS 1-19

Continued on next page

ROAD TEST 1-19
28. ENGINE PERFORMANCE AND EXHAUST GAS 1-19
29. TRANSMISSION IN ALL RANGES 1-19
30. BRAKES 1-20
31. STEERING CONTROL 1-20
32. VIBRATION AND RATTLES 1-20
33. ELECTRICAL EQUIPMENT 1-20

AFTER ROAD TEST 1-21
34. IDLE SPEED 1-21
35. IGNITION TIMING 1-21
36. RADIATOR COOLANT LEVEL 1-21
37. HOSES, FLUID LINES AND CONNECTIONS LOCATED UNDER HOOD 1-21
38. MANUAL TRANSMISSION AND TRANSFER (4WD) OIL LEVEL 1-21
39. AUTOMATIC TRANSMISSION FLUID LEVEL 1-22
40. ENGINE, TRANSMISSION, STEERING GEAR BOX AND DIFFERENTIAL FOR LEAKS 1-22
41. FRONT AND REAR DIFFERENTIAL OIL LEVELS 1-22
42. HOSES, FLUID LINES AND CONNECTIONS LOCATED UNDER VEHICLE 1-22

FINAL STEPS 1-23
43. HEADLAMP AIMING 1-23
44. EQUIPMENT 1-23
45. EXTERIOR AND INTERIOR 1-23
46. OWNER INSTRUCTIONS 1-23

NOTES CONCERNING ENTRIES

M6010100100132

This section describes the details and the inspection methods employed for the pre-delivery inspection of vehicles.
The inspection should be conducted according to the sequence described in the TABLE OF PRE-DELIVERY INSPECTION.
Inspection methods are described following the TABLE OF PRE-DELIVERY INSPECTION.

NOTE: The spaces for model, C/# (Chassis number), E/# (engine number), aggregate distance travelled in kilometres (miles), date of inspection, name of person conducting the inspection, and body colour must be completed without fail.

NOTE: The spaces for place of inspection, and name of owner should be completed as required.

TABLE OF PRE-DELIVERY INSPECTION

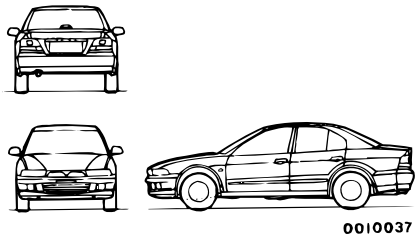

Model	
Chassis number	
Engine number	
Distance Travelled	km
Owner	
Date of inspection	
Place of inspection	
Inspector	
Body colour	

Symbols to be used					
√	Good	A	Needs adjustment	T	Needs retightening
C	Needs cleaning	L	Needs replenishment of lubricant, water, etc.	X	Needs replenishment of repair

INSPECTION PROCEDURE

First Step

1. ☐ Connection of the dark current connector

Body

2. ☐ Wrap film
3. ☐ Exterior
4. ☐ Operation of door locking systems and door hinges
5. ☐ Operation of door mirrors, windows and sunroof

Under Hood

6. ☐ Engine oil level
7. ☐ Brake master cylinder fluid level
8. ☐ Clutch master cylinder fluid level
9. ☐ Washer fluid level
10. ☐ Battery condition and connections
11. ☐ Power steering fluid level
12. ☐ Electrical wiring

Under Vehicle

13. ☐ Tyre and spare tyre pressures
14. ☐ Suspension system
15. ☐ Steering linkage and split pins
16. ☐ Under body

Before Road Test

17. ☐ Seat adjusters and seat back latches
18. ☐ Choke system and inhibitor switch
19. ☐ Idle control knob
20. ☐ Instrument panel controls
21. ☐ Meters, gauges, warning lamps and indication lamps
22. ☐ Air conditioning, heater and defroster systems
23. ☐ Wipers and washers
24. ☐ Operation of service brakes and parking brakes
25. ☐ Clutch operation
26. ☐ Operation of seat belts, shoulder belts and retractors

Road Test

27. ☐ Engine performance and exhaust gas
28. ☐ Transmission in all ranges
29. ☐ Brakes
30. ☐ Steering control
31. ☐ Vibration and rattles
32. ☐ Electrical equipment

After Road Test

33. ☐ Idle speed
34. ☐ Ignition timing
35. ☐ Radiator coolant level
36. ☐ Hoses, fluid lines and connections located under hood
37. ☐ Manual transmission and transfer (4WD) oil level
38. ☐ Automatic transmission fluid level
39. ☐ Engine, transmission, steering gear box and differential for leaks
40. ☐ Front and rear differential oil levels
41. ☐ Hoses, fluid lines and connections located under vehicle

Final Steps

42. ☐ Headlamp aiming
43. ☐ Equipment
44. ☐ Exterior and interior
45. ☐ Owner instructions

AC401525

PAINTWORK TERMS

M6010200100098

Term	Definition	Remark
Blister	A raised bubble in the paint (from the base or the undercoat) caused by abnormal moisture. The bubble may contain either water or air.	
Change in tone	The colour tone of the painted surface is not uniform.	Including wrong colour, discolouration and decolouration.
Contact mark	A mark on the painted surface as a result of contact by hands or clothing at the time of paint application.	
Crack	A crack in the painted surface.	Cracks may be either shallow or deep.
Dirt in paintwork	Rough surface resulting from foreign material in the paint or from dust deposited on wet paint during painting or storage.	
Filed or ground traces	Deep scratches in sheet metal surface, resulting from improper use of buffer or sander, are not completely covered, and are visible through paint coating.	
Orange peel	The painted surface has the appearance of an orange peel.	
Peeling	The paint flakes off (partly or over a wide area).	The peeling may be minor, medium, or major.
Pin holes	Tiny holes in the painted surface.	
Runs	A visible trickle of dried paint on the surface.	Either undercoat or top-coat.
Scratches	Scratches on the painted surface.	
Shrink	The painted surface "shrinks", causing wrinkles.	
Smears	Spots of soot or other material deposited on the painted surface.	Including stains and water spots.
Spray mist	The painted surface includes fine particles of other paint.	
Uneven lustre	The lustre of the painted surface is not uniform.	
Uneven metallic dispersion	The metallic dispersion of the painted surface is not uniform.	
Visibly incomplete topcoating	A part of the undercoating visible.	

FIRST STEP

1. CONNECTION OF DARK CURRENT CONNECTOR

M6010300100493

<EXCEPT EV, PHEV>

CONNECTING PROCEDURE

⚠ CAUTION

Turn the ignition switch to the LOCK (OFF) position before connecting storage connector.

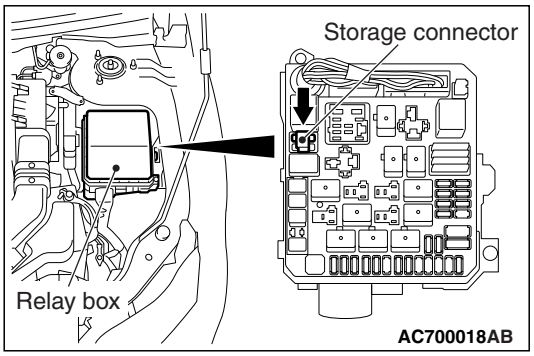

Press down the storage connector.

<EV>

CONNECTING PROCEDURE

⚠ CAUTION

Turn the electric motor switch to the LOCK (OFF) position before connecting storage connector.

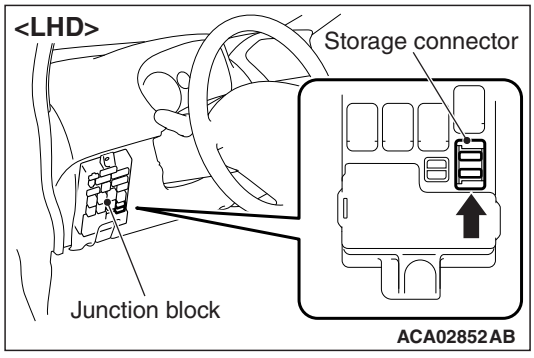

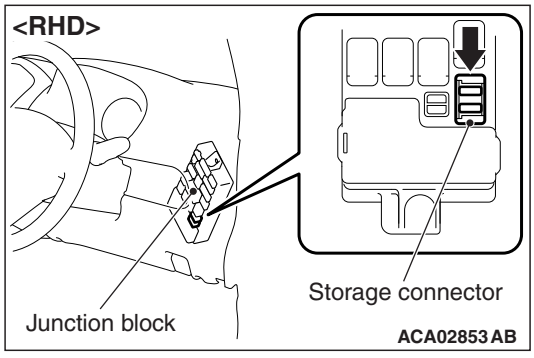

Press down the storage connector. After the connector has been pressed down once, never pull up it.

⚠ CAUTION

Never disconnect the negative terminal of the auxiliary battery even if a vehicle is stored for long term.

CONFIRMATION OF PRODUCTION DATE OF MAIN BATTERY

Confirm the production date of the main battery to check whether the elapsed period after the main battery has been produced exceeds an estimated transportation period. If it exceeds, compensate the BMU by referring to the Workshop Manual.
For example:
If the estimated transportation period is three months and the production date of the main battery is April:

- Before July 31: Compensation is not necessary because the elapsed period does not exceed three months
- After August 1: Compensation is necessary because the elapsed period exceeds three months

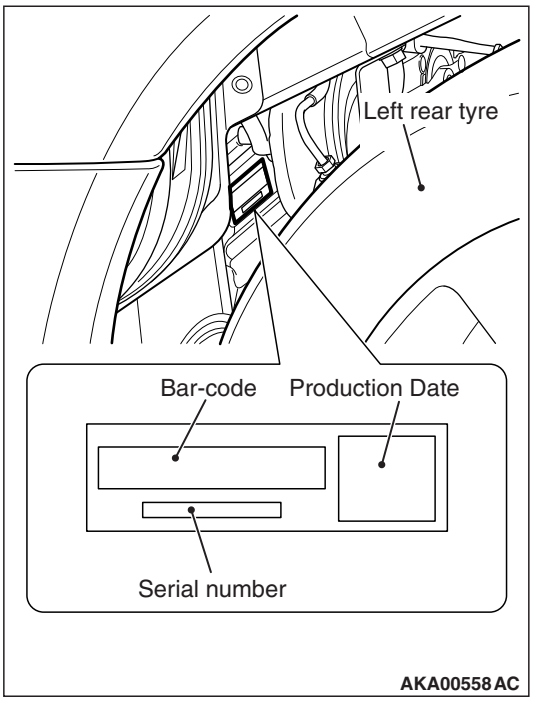

1. Location of production date
   - The production date is labelled on the rear side of the main battery, and can be identified through the rear left wheelhouse.
2. Estimated vehicle transportation period
   - Europe: Three months

<PHEV>

CONNECTING PROCEDURE

⚠ CAUTION

Turn the electric motor switch to the LOCK (OFF) position before connecting storage connector.

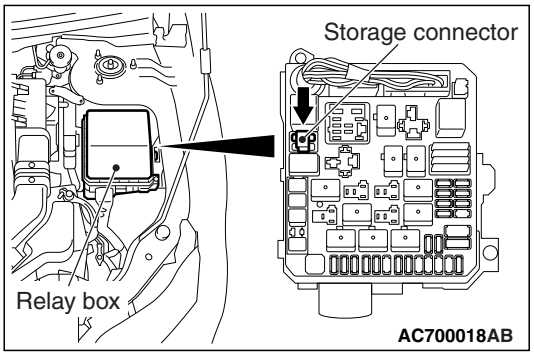

Press down the storage connector. After the connector has been pressed down once, never pull up it.

⚠ CAUTION

Never disconnect the negative terminal of the auxiliary battery even if a vehicle is stored for long term. If you turn the electric motor switch "ON" while the storage connector is disconnected, the warning message as "EV SYSTEM SERVICE REQUIRED" with a warning icon appears on the centre display.



It is the normal behaviour and nothing wrong with the vehicle. However, if you connect the storage connector under this condition, the diagnosis code will be set in the ECU. Consequently you need to delete it before delivering the vehicle to your customer. In order to avoid this unnecessary diagnosis code, please make sure that the storage connector is connected only when the electric motor switch is turned "OFF".

CONFIRMATION OF PRODUCTION DATE OF MAIN BATTERY

Confirm the production date of the main battery to check whether the elapsed period after the main battery has been produced exceeds an estimated transportation period. If it exceeds, compensate the BMU by referring to the Workshop Manual.
For example:
If the estimated transportation period is three months and the production date of the main battery is April:

- Before July 31: Compensation is not necessary because the elapsed period does not exceed three months
- After August 1: Compensation is necessary because the elapsed period exceeds three months

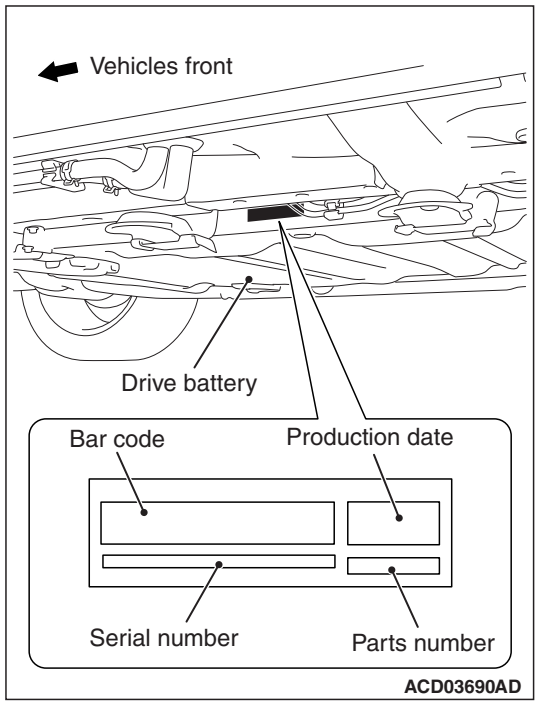

1. Location of production date
   - The production date is labelled on the rear side of the main battery, and can be identified through the rear left wheelhouse.
2. Estimated vehicle transportation period
   - Europe: Three months

BODY

2. WRAP FILM

M6010400100241

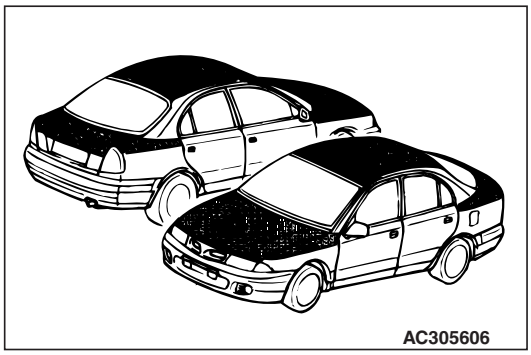

Vehicles may be shipped from the assembly plant to the distributors with a white plastic film or coating (wrap film) applied for the purpose of protecting the painted exterior from environmental elements where the assembly plant and point of embarkation is located.
Distributors are required to remove the wrap film immediately after receiving vehicles, which is necessary for PDI operations. Please refer to the following chart for the procedures.

REMOVAL PROCEDURE

Flow Chart of Wrap Film Removal

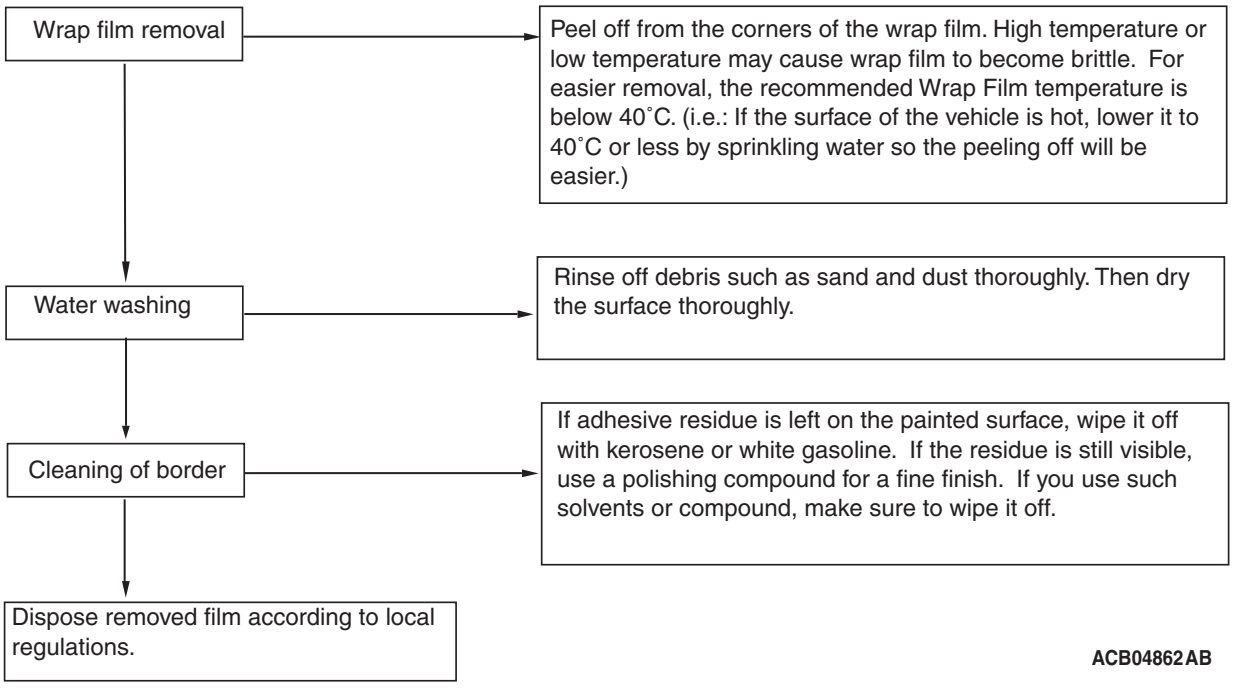

The procedures to re-apply the wrap film

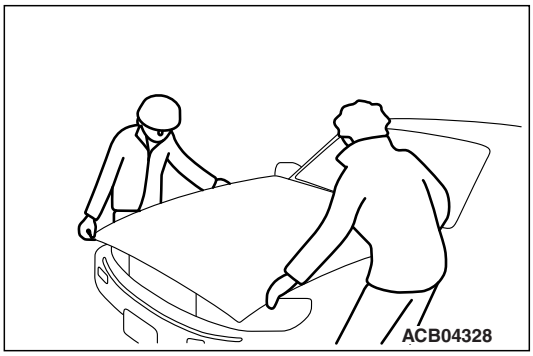

If there is an environment that the vehicles in stock may be exposed to elements such as acid rain, dust particles, it may be recommendable to re-apply the wrap film for the purpose of protecting the painted exterior from the environment. Please refer to the following chart for the procedures to re-apply the wrap film.

Steps.	Process	Tips
1	Remove old wrap film	Follow the "flow chart of removing the wrap film"
2	Prepare the surface to adhere the wrap film	Make sure there is no debris such as sand or dust. Dry the surface thoroughly. The temperature of the area to apply the wrap film should be below 40°C for workability.
3	Re-apply the wrap film	The area to re-apply the wrap film is the same area where the original wrap film was applied. 1. Begin adhering the wrap film from the low part of the vehicle and move upward. Maintain some tension on the wrap film so it will not get wrinkled or trap air bubbles. Although air bubbles it self will not damage the paint, you can avoid trapping air by adhering the wrap film from the centre to the out side of the vehicle. Use a tool such as a squeezer to adhere the wrap film firmly to the vehicle. 2. For moving panels such as the hood and trunk lid, or portion where parts such as windshield washer nozzles are pointing out, cut the wrap film accordingly, so it will adhere to the paint surface firmly. 3. If the top side of the film (the side without the adhesive) is left to contact the painted surface, it may damage the paint surface. (for example, become lusterless). The edges of the wrap film and overlapping portions should be firmly adhered to prevent entry of rain under the wrap film. 4. To prevent colour difference to be recognised between the areas wrapped and unwrapped due to exposure to sunlight etc. during storage, we recommend the boundary of wrapped and unwrapped areas be on a vertical location.

Steps.	Process	Tips

⚠ CAUTION

- **Be careful not to damage the paint surface while cutting the wrap film.**
- **Once the wrap film is adhered to the vehicle, it should remain on the vehicle for no more than 6 months. If it is necessary, a new wrap film should be adhered to the vehicle following the steps above, based on your inventory management schedule.**

Guidelines to give you an estimate of the labour costs

Approximate labour time to adhere wrap film

area to apply wrap film (m^2)	labour time (min)
3.5 - 5.5	10 - 15
5.5 - 7.0	15 - 20

How to acquire the wrap film

It will be a direct transaction between O-WELL. Fill the necessary information, contact information;*1 and ordering quantity;*2 in the specified portion of the document attached below and send to O-WELL Corporation. The necessary information is stated in the document attached below. O-WELL will give you a quotation in return.

Owell
FINE RELATIONS FOR NEXT

*1 Quotation request No. ____

Date _____

from

name of company

_____

address

_____

Tel; _____

Fax; _____

a person in charge

_____

e-mail address

_____

To

O-WELL CORPORATION

3-6-17, Kitashinagawa, Shinagawa-ku,
Tokyo 140-0001 Japan
Phone:81-3-6812-8607
Telefax:81-3-6812-8614
E-Mail:y-honda@owell.co.jp
o-kagami@owell.co.jp
n-kosaka@owell.co.jp

please quote us as follows;

Conditions

(1) Payment; All amount (100%) should be paid by T/T remittance in advance is required.
Our banking information;
The bank of Tokyo Mitsubishi UFJ, Ltd Kamata Branch
5-12-6 kamata, Ota-Ku, Tokyo 144-0052 Japan
SWIFT; BOTKJPJT, Account # 117-1059643
Accountee; O-WELL Corporation

(2) Delivery; By DHL or any other way by air.
Lead time to delivery; within 10 working days
Expected delivery by;_____ to (air-port)_____

(3) Trade Term; CPT(C&F) destination air-port in US Dollar

(4) Validity of quotation; by the end of next month

(5) Manufacturer and Specification;
Kansai Paint Co., Ltd. Japan
RAPGARD-F (Guard Film) with adhesive, thickness 45 micron polyolefin resin over 90%

Description	Required quantity	Unit Price	Amount
	(Cartons)		CPT US Dollar
Width; _____ Length; _____			
Delivery charges			
Country of origin; Japan			
Customs Tariff No. 3919.90 Self-adhesive film	(1)		
Total;G.W.(kg) cartons			

O-WELL Corporation

ACB04863

RAPGARD-F; Ordering information

Width mm	Length Meter	Weight per roll Kg	Quantity per carton rolls	Carton		*2 Ordering quantity carton
				Dimension W x D x H mm	Weight kg	
50	100	0.3	48	390x347x325	16.2	
70	100	0.4	32	390x347x325	13.5	
100	100	0.6	24	390x347x325	16.2	
150	100	0.8	16	380x337x305	14.8	
200	100	1.1	8	380x337x205	9.4	
250	100	1.4	8	380x337x255	11.8	
300	100	1.7	8	380x337x305	14.3	
600	100	3.3	4	1300x265x135	14.8	
720	100	4.0	2	740x250x125	9.5	
900	200	8.9	1	940x160x160	10.4	
1100	200	10.8	1	1140x160x160	12.3	
1200	200	11.8	1	1240x160x160	13.3	
1300	200	12.8	1	1340x160x160	13.9	

Film Thickness (micron);

film 35 μ + adhessive10 μ = Total 45 μ (43g/M2)

				*2
RAPGARD Cutter	10 pcs/ctn	230x120x10	75 g/pcs	
Squeezer	10 pcs/ctn	400x250x80	150 g/pcs	

Attention;

1) Distributors have to fill in

2) O-WELL to fill out in

ACB04864

3. WHEEL

M6010400500012

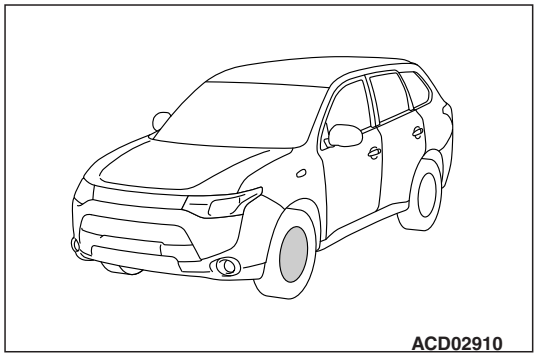

Vehicles may be shipped from the assembly plant to the distributors with a plastic film or cover (non-adhesive type) applied in order to avoid rust of the brake disc. Distributors should remove the plastic film or cover just before delivering the vehicle to your customer. However, the plastic film should be removed in five months after the vehicle is delivered to the distributor. The plastic cover can be kept for more than five months.

⚠ CAUTION

Be careful not to damage the paint surface when removing the plastic film or cover.

4. EXTERIOR

M6010400200301

1. Visually inspect the entire exterior.
   (1) Paint condition
   (2) Corrosion, scratches
   (3) Bent edges, dented panels
2. Coated surfaces maintenance
   Touch up minor paint chips and flaws.
   (Refer to paintwork terms)

5. OPERATION OF DOOR LOCKING SYSTEMS AND DOOR HINGES

M6010400300137

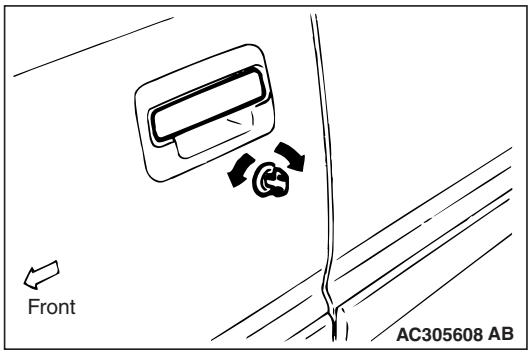

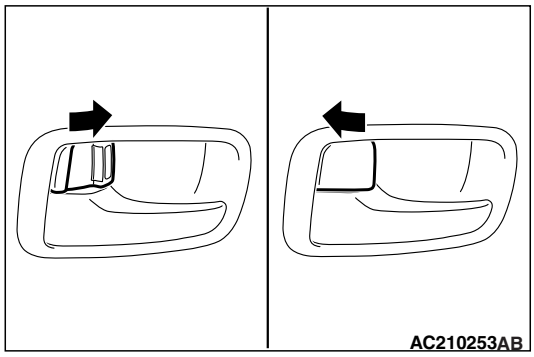

1. Open each door to check the release mechanism and ease of operation.
2. Close the door to check the latch and striker.
3. Open the door, operate the lock lever and close the door to check the lock.
4. Partially close the door to check the open-door detent.
5. Unlock each door with the key to check lock operation.
6. Verify that all doors can be locked by the lock buttons.

NOTE: Adjust and lubricate the door latches, strikers and locks as required.

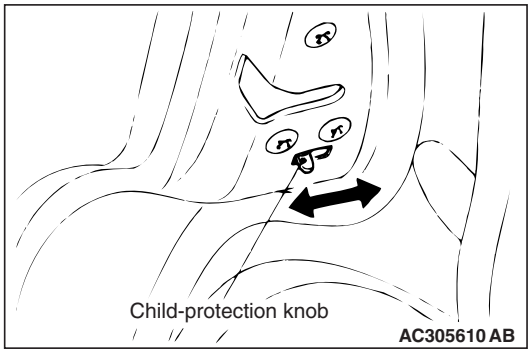

7. Verify that the rear doors can't be opened by the inner door handle when the child protection knob at the end of the door is shifted to the "LOCK" position with the inside lock plunger raised.

NOTE: Set the lock to the "FREE" position on child protection of both rear doors. (For four door models)

6. OPERATION OF DOOR MIRRORS, WINDOWS AND SUNROOF

M6010400400190

1. Door mirrors

   Check that the mirror operate properly.
2. Door windows

   Close all door windows to the fully closed position to check ease of operation.
3. Power windows

   Check that the door windows operate when the respective switches are operated. Check that when the lock switches are depressed, the respective door windows can no more be opened or closed.
4. Slide window

   Close the slide window to the fully closed position to check operation.
5. Sunroof

   Close the sunroof to the fully closed position to check operation.

UNDER HOOD

7. ENGINE OIL LEVEL

M6010500100293

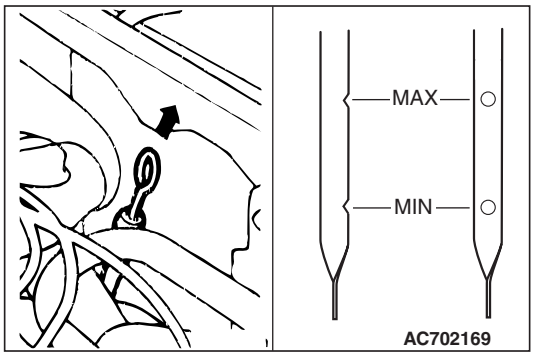

Check that the oil level is between "MAX" and "MIN". If it is at or below "MIN", add the necessary amount of the specified engine oil referring to GROUP 2, Periodic Inspection and Maintenance.

8. BRAKE MASTER CYLINDER FLUID LEVEL

M6010500200223

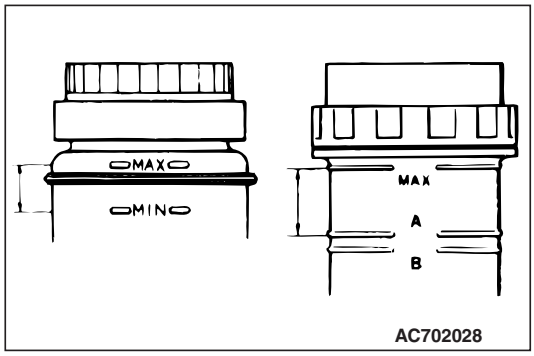

Check the fluid level.
If it is below the "MIN" mark, replenish fresh brake fluid up to the "MAX" mark.

Specified Brake Fluid: DOT3 or DOT4

9. CLUTCH MASTER CYLINDER FLUID LEVEL

M6010500300026

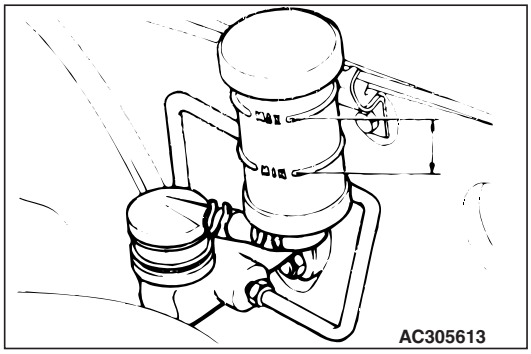

Check the fluid level.
If it is below the "MIN" mark, replenish fresh brake fluid up to the "MAX" mark.

Specified Brake Fluid: DOT3 or DOT4

10. WASHER FLUID LEVEL

M6010500400186

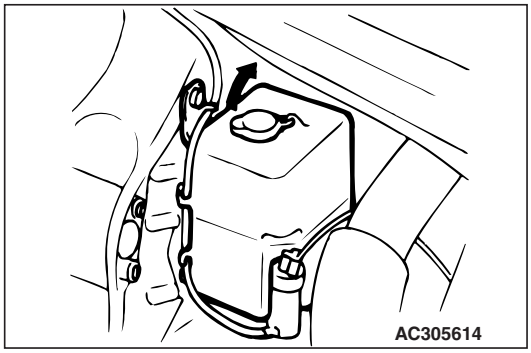

Check the fluid level; if it is low, replenish the washer fluid.

1. Windshield washer reservoir
2. Rear window washer reservoir

11. BATTERY CONDITION AND CONNECTIONS

M6010500500042

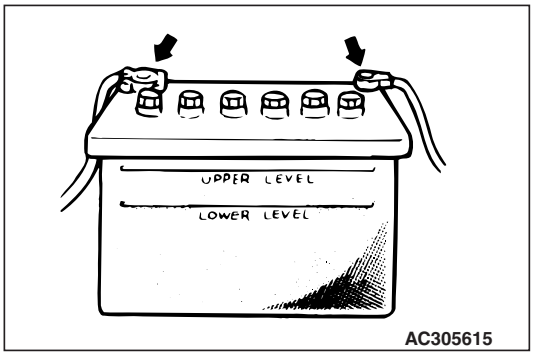

Inspect the battery connections. Verify that they are tightened.

NOTE: Do not wipe the lubricant from the battery posts and cable clamps.

12. POWER STEERING FLUID LEVEL

M6010500600072

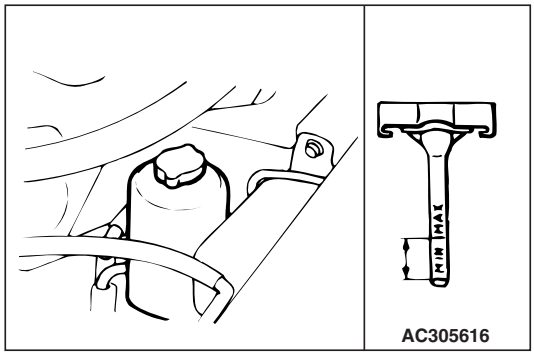

1. Check that the fluid level is between "MAX" and "MIN".
2. If the fluid is added, start the engine and turn the steering wheel from stop to stop several times to expel air from the system.

Specified gear oil: Automatic transmission fluid DEXRON III or DEXRON II

13. ELECTRICAL WIRING

M6010500700024

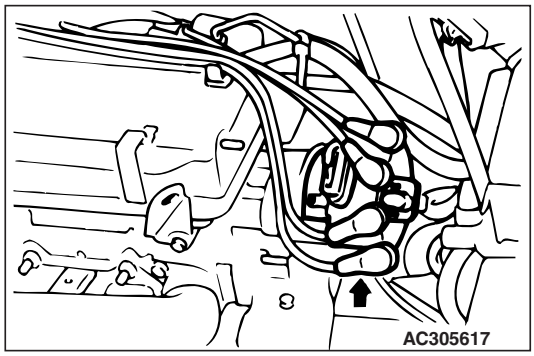

1. Each electrical wiring harness and connector
   (1) Check each harness to be correctly routed and securely clipped.
   (2) Confirm that all connections are tight.
2. Ignition cable
   Be sure that all ignition cables are firmly attached to the spark plugs, distributor cap (or crank angle sensor) and ignition coil.

UNDER VEHICLE

14. TYRE AND SPARE TYRE PRESSURES

M6010600100041

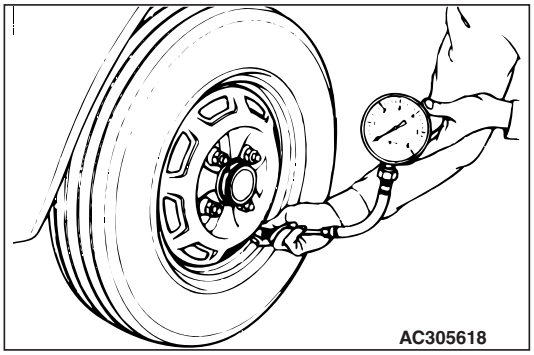

1. Tyre specification
   Check the correct tyre specification.
2. Tyre pressures
   Adjust each tyre pressure.

   NOTE: Recommended pressure is shown on the tyre pressure label.
3. Valve stem extensions
   Verify that the valve stem extensions are installed where necessary.
4. Install the wheel covers, wheel rings and hub caps.

15. SUSPENSION SYSTEM

M6010600200178

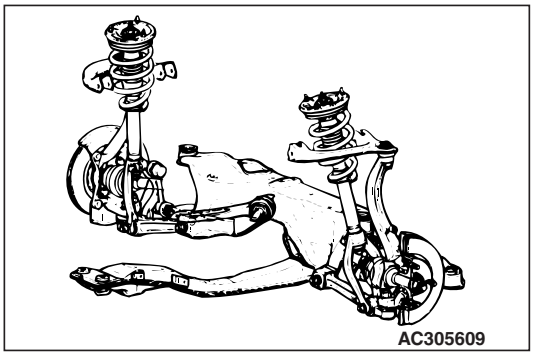

Check to be sure that each installation bolt and nut is tightened. If split pins are used, make sure that they are properly installed.

1. Lower arm, Upper arm
2. Stabilizer bar
3. Strut assembly

REMOVE FRONT SPRING RESTRAINTS

⚠ CAUTION

It is very important that these restraints must be removed during pre-delivery inspection. Failure to do so could cause ride and handling complaints.

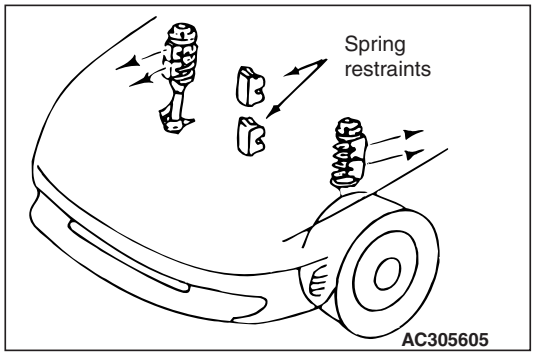

With the vehicle correctly positioned on the sub-frame contact points, and the suspension fully extended, remove the rubber restraints from the front springs.

16. STEERING LINKAGE AND SPLIT PINS

M6010600300023

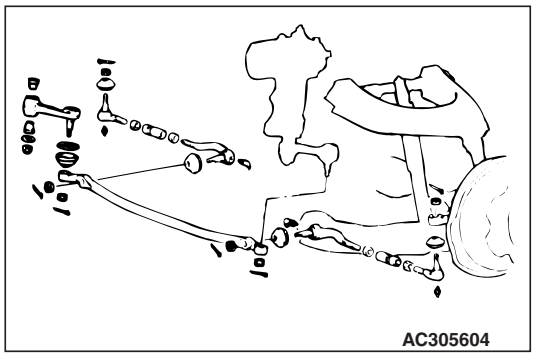

1. Steering linkage retaining nuts and split pins
   Check visually and by feel that the steering linkage retaining nuts are correctly tightened and the split pins are correctly installed.
2. Tie rods and relay rod
   Check that the tie rods and relay rod of the steering linkage are not bent and that the tie rod end lock nuts are securely tightened.
3. Steering components
   (1) Check that each of the steering components is tightened.
   (2) Check the tie rod end, nuts and split pins for proper installation.
   (3) Check the condition of bellows-type dust seals.

4. Split pins
   Check the front axle nuts and rear wheel spindle nuts for split pins.

17. UNDER BODY

M6010600400020

Check under body and under body coating for damage.

BEFORE ROAD TEST

18. SEAT ADJUSTERS AND SEATBACK LATCHES

M6010700100082

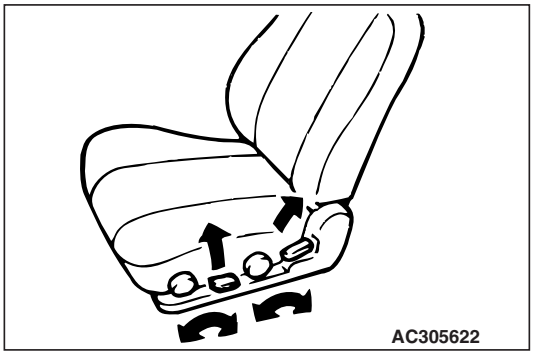

Check the operation of the various parts of the seats.

1. Mechanical adjusters of the seats
2. Operation of the latch for tilting the seatbacks forward and backward.

19. INHIBITOR SWITCH

M6010701100029

On models with an automatic transmission, be sure the engine starts in both "P" and "N" position, and does not start in other positions.

20. IDLE CONTROL KNOB

M6010700300020

Verify that the diesel engine revolution increases when the idle control knob is pulled out.

21. INSTRUMENT PANEL CONTROLS

M6010700400083

Check the operation of the following

1. Horn
2. Headlamps
3. Exterior and interior lamps
4. Instrument panel lamps
5. Instrument brightness control

22. METERS, GAUGES, WARNING LAMPS AND INDICATION LAMPS

M6010700500024

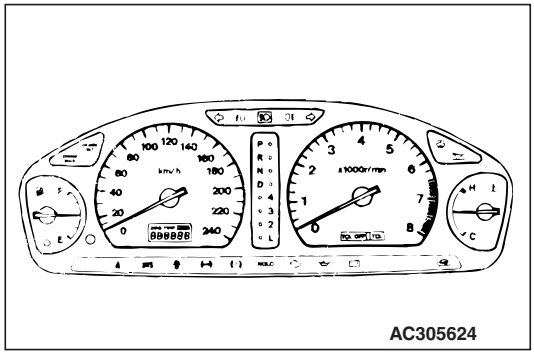

1. Check the meters and gauges are functioning properly.
2. Check each indicator lamp and warning lamp functions properly.

23. AIR CONDITIONER, HEATER AND DEFROSTER SYSTEM

M6010700600128

Check the systems for proper operation.

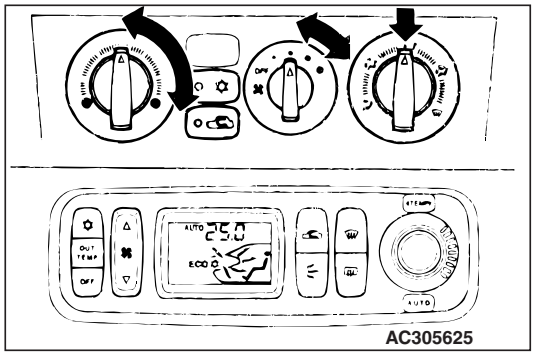

1. Air conditioner
   (1) Operate the air conditioner system.
   (2) Operate the air conditioner light.
   (3) Operate the control lever in all ranges.
   (4) Operate the blower motor switch in all ranges.

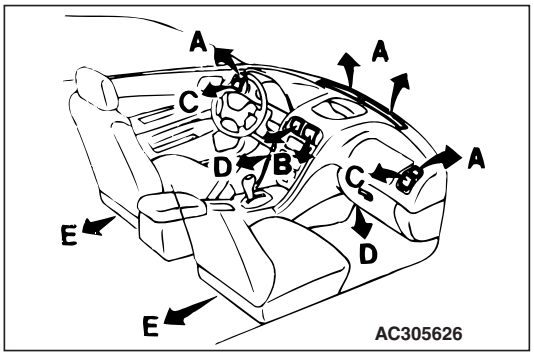

2. Heater and defroster
   (1) After the engine has warmed up, turn on the heater.
   (2) Operate the blower motor switch in all ranges.
   (3) Move the control to "Defrost" position.
   A: From front and side defroster
   B: From centre ventilators
   C: From side ventilators
   D: From under the instrument panel
   E: From under the front seat (some models only)

24. WIPERS AND WASHERS

M6010700700028

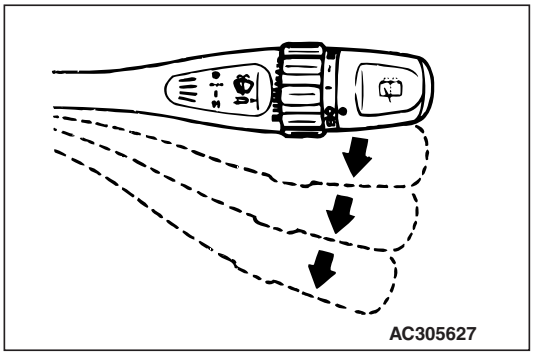

1. Front wiper and washer
   (1) Check operation of the front wipers in all ranges.
   (2) Check the aim of the front washer stream.
   (3) Check the wiper blade-stop positions.
   (4) Verify that the interval between cycles of wiping is shifted when timer knob is turned to any position.
   (5) Verify that the front wipers function by operating the washer switch.
2. Rear wiper and washer
   (1) Check the operation of the rear wiper.
   (2) Check the aim of the rear washer stream.
   (3) Check the wiper blade-stop positions.

25. OPERATION OF SERVICE BRAKES AND PARKING BRAKES

M6010700800382

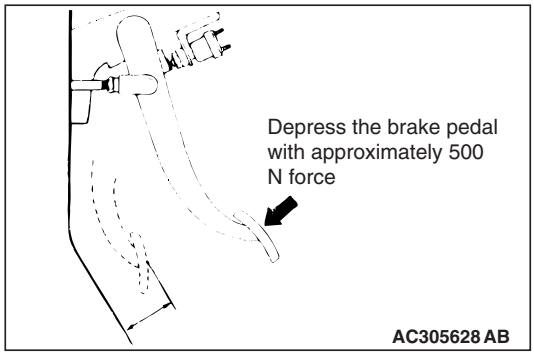

1. Service brakes
   (1) Check the clearance between the brake pedal and the floorboard when the brake pedal is depressed.

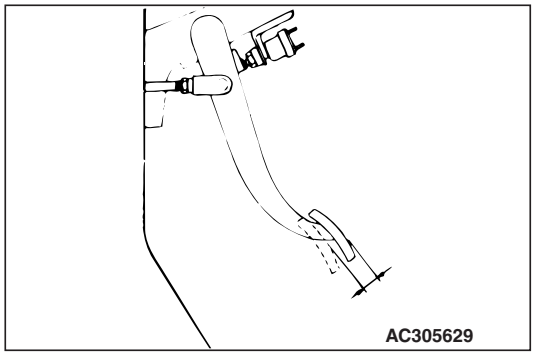

   (2) Verify correct brake pedal free play.
   NOTE: For inspection and adjustment of the service brake, refer to GROUP 2, Periodic Inspection and Maintenance.
2. Parking brake
   Check the parking brake drag and lever travel.
   NOTE: For inspection and adjustment of the parking brake, refer to GROUP 2, Periodic Inspection and Maintenance.

26. CLUTCH OPERATION

M6010700900282

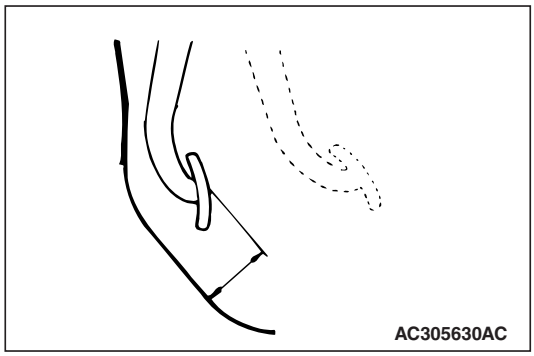

1. Check the clutch operation in all driving ranges.

2. Check the pedal to floorboard clearance when the clutch is just disengaged.

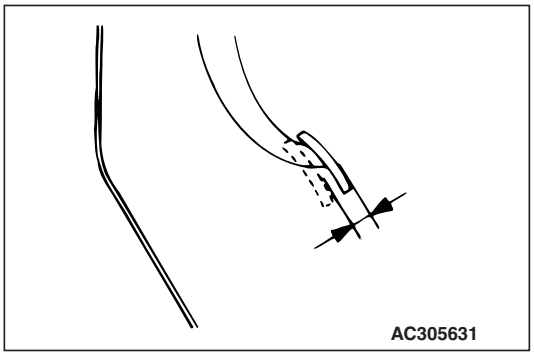

3. Verify correct clutch pedal free play.

   NOTE: For inspection and adjustment of the clutch pedal, refer to GROUP 2, Periodic Inspection and Maintenance.

27. OPERATION OF SEAT BELTS, SHOULDER BELTS AND RETRACTORS

M6010701000022

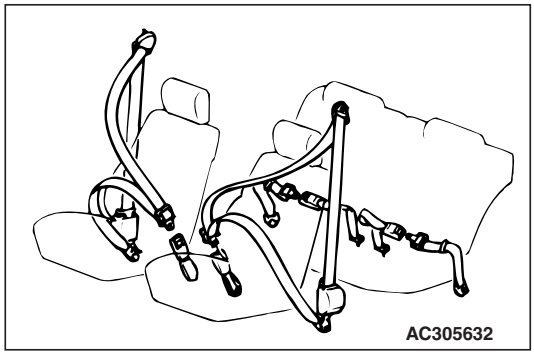

1. Verify that the seat belt warning lamp operates properly.
2. Check all seat belts and harnesses to assure that they connect and hold properly.
3. Lean forward to check that the shoulder harnesses allow movement.
4. Check the condition of the belts and anchors.
5. Check for proper seat belt retraction.

ROAD TEST

28. ENGINE PERFORMANCE AND EXHAUST GAS

M6010800100023

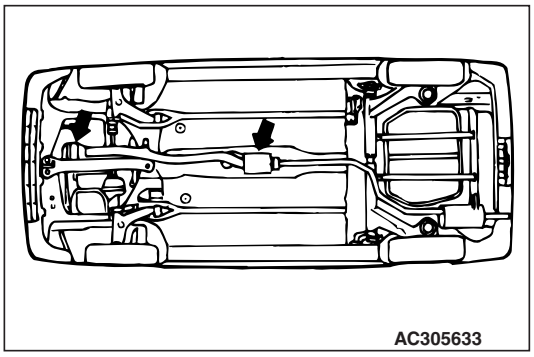

1. Engine performance
   Check the engine for proper performance and accelerator pedal for smooth operation.
2. Exhaust system
   (1) Check the exhaust system components for gas leaks.
   (2) Verify that no black smoking is emitted from the end of the exhaust pipe (diesel-powered vehicles).

29. TRANSMISSION IN ALL RANGES

M6010800200020

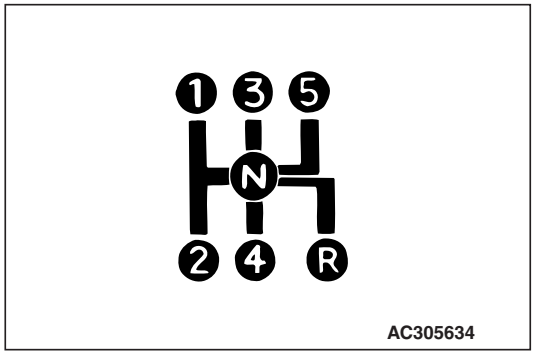

1. Manual transmission
   Check the transmission in all forward ranges and in reverse.

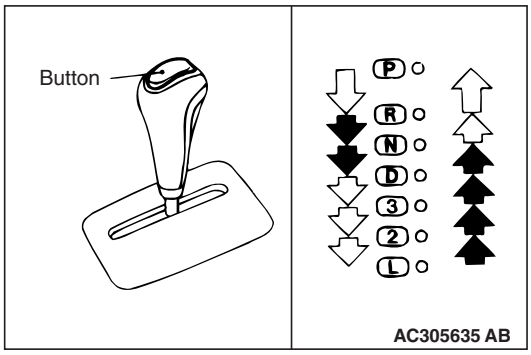

2. Automatic transmission
   (1) Make sure shift indicator lines up properly in all ranges.
   (2) Depress the accelerator completely to check that the manual kickdown is operating correctly.
   (3) Stop the vehicle on a steep incline.
   Put the automatic transmission in "P" position and slowly release the service brakes to see if "P" position lock holds. If it does not hold, the transmission requires further service.

30. BRAKES

M6010800300027

1. Service Brake
   Put the vehicle in gear and apply the brakes while the vehicle is in motion. Be sure brake operation is smooth and positive.
2. Parking Brake
   (1) Stop the vehicle on a steep incline.
   With the service brakes firmly applied, place the transmission in "N" position, and set the parking brakes.
   (2) Slowly release the service brakes to see if the parking brakes will hold.

31. STEERING CONTROL

M6010800400024

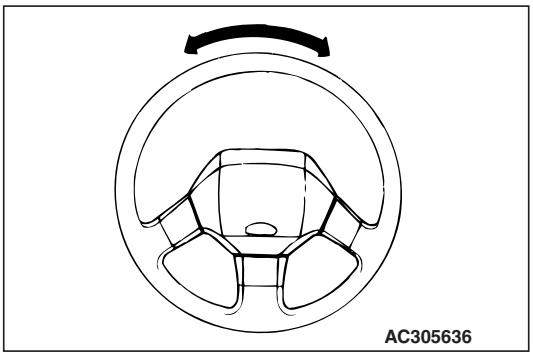

1. Check for excessive play or looseness.
2. Check the steering wheel centre.

32. VIBRATION AND RATTLES

M6010800500021

1. Locate squeaks, rattles and unusual vibrations.
2. Verify that no noise occurs from the engine, transmission, axle and body.

33. ELECTRICAL EQUIPMENT

M6010800600028

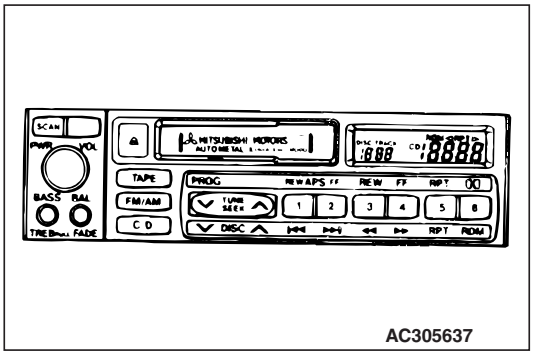

1. Radio
   Tune the radio to a local broadcasting station and check the following:
   (1) Operate the volume, tone, balance and fader controls, etc.
   (2) Pull out the pushbuttons, dial another station and set each pushbuttons.
   (3) Operate the AM/FM switch.
2. Tape player
   Insert a cassette tape in the tape player and check as follows:
   (1) Check the operation of the tape feeder and rewind.
   (2) Check the ejection.
   (3) Check the operation of volume, tone, balance and fader controls, etc.

AFTER ROAD TEST

34. IDLE SPEED

M6010900100172

Check the engine idle speed.

NOTE: For specific idle speed adjustment procedure, refer to GROUP 2, Periodic Inspection and Maintenance.

35. IGNITION TIMING

M6010900200179

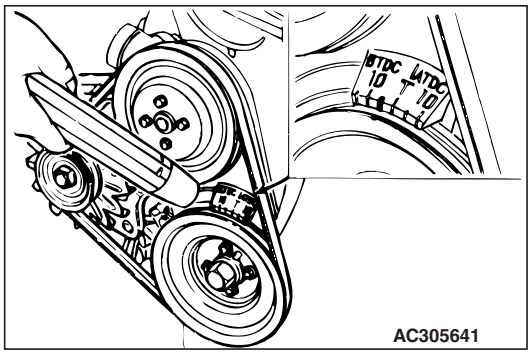

Check the ignition timing. Except MPI vehicles with crankshaft-mounted crankshaft angle sensor.

NOTE: For the inspection and adjustment of the ignition timing, refer to GROUP 2, Periodic Inspection and Maintenance.

36. RADIATOR COOLANT LEVEL

M6010900300154

⚠ CAUTION

Do not remove the radiator cap while the cooling system is under pressure.
When removing the radiator cap, be careful of steam and boiling water. Add coolant only to the reserve tank if it is required.

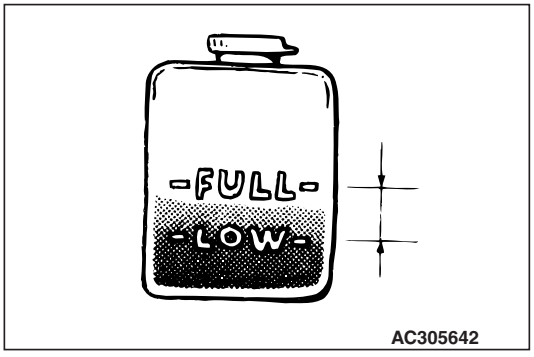

1. Check that the coolant level in the reserve tank is at or above "LOW" mark at normal engine operating temperature. And check cooling system for leaks.
2. Check that the coolant concentration is 30% to 60%.

37. HOSES, FLUID LINES AND CONNECTIONS LOCATED UNDER HOOD

M6010900400203

⚠ CAUTION

Remember that the air conditioner system is under pressure.

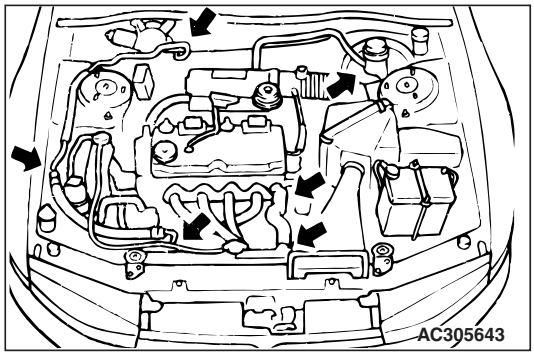

1. Check all brake, fuel, power steering and air conditioner lines and connections; verify proper routing, check connections for leaks, tighten loose connector as required.
2. Inspect routing and connections of all vacuum, and radiator and heater houses.

   NOTE: Keep in mind that an oily residue around an air conditioner connector does not necessarily indicate a leak. Oil is used to lubricate fittings during assembly. Be sure lines are not twisted or kinked.

38. MANUAL TRANSMISSION AND TRANSFER (4WD) OIL LEVEL

M6010900500211

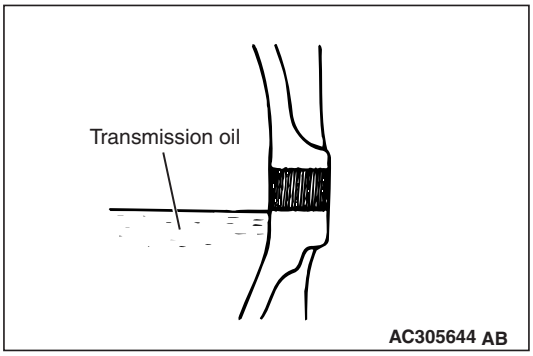

1. Remove the filler plug.
2. Check the oil level. If the oil level is at or slightly below the filler hole, it is in satisfactory condition.
3. If the level is low, replenish the transmission and transfer case with fresh oil by using a lubricator.

   NOTE: For the specified oil, refer to GROUP 2, Periodic Inspection and Maintenance.

39. AUTOMATIC TRANSMISSION FLUID LEVEL

M6010900600230

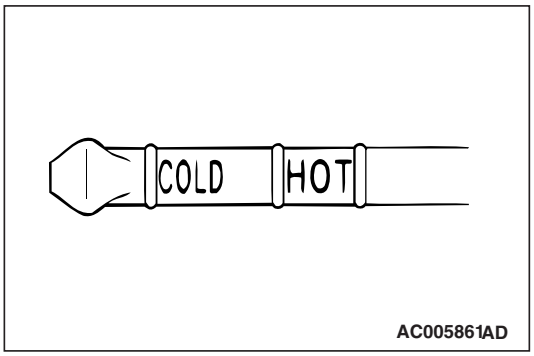

1. Remove the dipstick and check the fluid level.
2. Fluid level is okay if it is in the specified range as illustration at normal engine operating temperature.
3. If the level is below the lower notch, replenish fluid until the level reaches the upper notch.

   NOTE: For the specified automatic transmission fluid, refer to GROUP 2, Periodic Inspection and Maintenance.

40. ENGINE, TRANSMISSION, STEERING GEAR BOX AND DIFFERENTIAL FOR LEAKS

M6010900700055

Check the engine, transmission, steering gear box and differential for oil leaks.

41. FRONT AND REAR DIFFERENTIAL OIL LEVELS

M6010900800427

⚠ CAUTION

Gaskets (or packing) for the oil filler plug and the drain plug are non-reusable parts. Always replace them with new one, or oil leaks may be caused.

1. Remove the filler plug.
2. Check the oil level. If the oil level is at or slightly below the filler hole, it is in satisfactory condition.

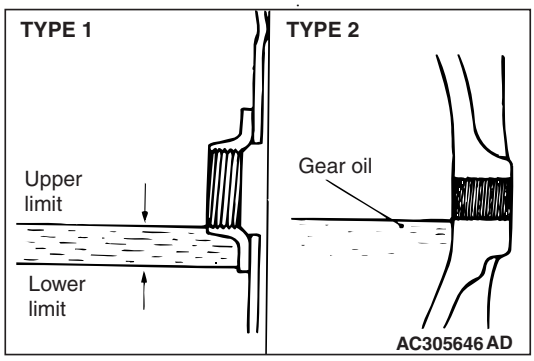

Type 1 only: Remove the filler plug, and check the gear oil level.

NOTE: For oil level, refer to GROUP 2, Periodic Inspection and Maintenance.

3. If the level is low, replenish the front and/or rear differential with fresh oil by using a lubricator.

   NOTE: For the specified oil, refer to GROUP 2, Periodic Inspection and Maintenance.

4. Renew a gasket, because it is a non-reusable part.
5. Install the filler plug with a new gasket, and tighten it to the specified torque.

   NOTE: For the specified oil, refer to GROUP 2, Periodic Inspection and Maintenance.

42. HOSES, FLUID LINES AND CONNECTIONS LOCATED UNDER VEHICLE

M6010901000145

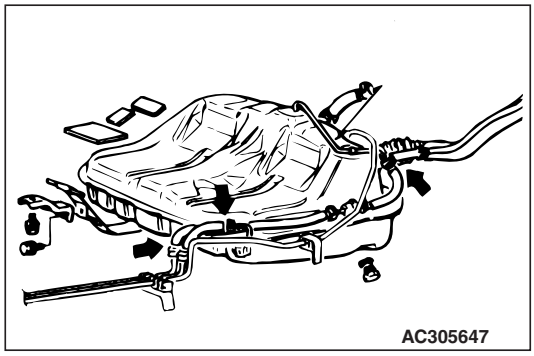

1. Check all hoses, fluid lines and connections for leaks.
2. Check all hoses and fluid lines for proper routing away from sharp edges and moving components.

FINAL STEPS

43. HEADLAMP AIMING

M6011000100116

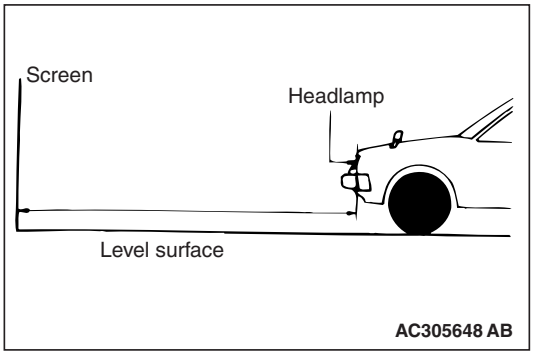

Check condition for headlamp aiming.

NOTE: For headlamp aiming procedures, refer to the Workshop Manual for that model.

44. EQUIPMENT

M6011000200209

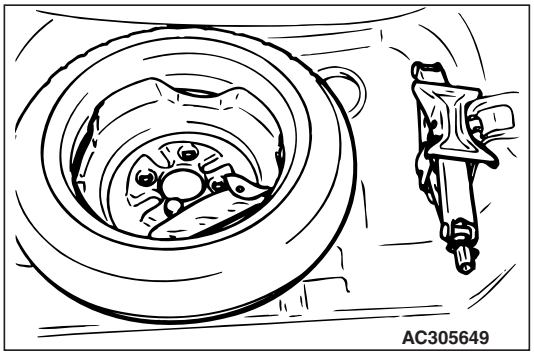

Check the installation of the various equipment.

1. Trunk room floor mats
2. Spare tyre
3. Jack, jack handle and tool set

45. EXTERIOR AND INTERIOR

M6011000300262

Finally check and clean the exterior and interior.

1. Wash the vehicle to remove all traces of road grime and other dirt on the vehicle as a result of new vehicle preparations.
2. Clean exterior and interior glass surface.
3. Remove all protective covers.
4. Remove undercoat overspray, excess window sealer, and excess weatherstrip adhesive.
5. Verify that the secondary key can not unlock the glove box and tailgate/boot lid (if so equipped).
6. Remove shipping and inspection stickers.

46. OWNER INSTRUCTIONS

M6011000400054

1. Verify that the owner's manual and service booklet is in the glove box.
2. Place the spare keys in envelope in the glove box before delivery.

NOTES

GROUP 2

PERIODIC INSPECTION AND MAINTENANCE

CONTENTS

PERIODIC INSPECTION AND MAINTENANCE SCHEDULE 2-3

OPERATIONS INSIDE THE ENGINE COMPARTMENT 2-13

A1. CHECK DRIVE BELT FOR CRACKS, FRAYING, WEAR, AND ADJUST ITS TENSION 2-13

A2. CHECK INTAKE AIR HOSE FOR DAMAGE (VEHICLES WITH A TURBOCHARGER). 2-17

A3. CHECK OPERATION OF CRANKCASE EMISSION CONTROL SYSTEM. 2-17

A4. REPLACE SPARK PLUGS. 2-18

A5. CHECK VALVE CLEARANCE (EXCEPT VEHICLES WITH AUTO-LASH ADJUSTER) 2-18

A6. CHECK RADIATOR HOSES FOR DAMAGE AND PROPER CONNECTION 2-25

A7. CHECK ENGINE COOLANT LEVEL IN RESERVOIR 2-25

A8. ENGINE COOLANT CHANGE 2-25

A9. CHECK AIR CLEANER ELEMENT FOR CLOGGING AND DAMAGE 2-29

A10. REPLACE AIR CLEANER ELEMENT 2-29

A11. CHECK FLUID LEVEL IN BRAKE RESERVOIR AND CLUTCH RESERVOIR 2-29

A12. CHANGE BRAKE FLUID 2-29

A13. CHECK BATTERY CONDITION. 2-30

A14. REPLACE FUEL FILTER 2-31

A15.CHECK HIGH VOLTAGE CABLE FOR DAMAGE AND PROPER CONNECTION 2-34

A16. CHECK FRONT MOTOR FOR COOLING OIL LEAKAGE. 2-37

A17. CECHK REAR MOTOR COOLANT LEVEL IN RESERVOIR 2-37

A18. CHANGE REAR MOTOR COOLANT. 2-37

OPERATIONS UNDER THE VEHICLE. 2-40

B1. CHECK SUSPENSION SYSTEM FOR DAMAGE AND LOOSENESS 2-40

B2. CHECK SUSPENSION ARM BALL JOINTS FOR PLAY, AND DUST COVERS FOR DAMAGE 2-41

Continued on next page

B3. CHECK DRIVESHAFT BOOTS FOR DAMAGE 2-41
B4. CHECK STEERING LINKAGE FOR DAMAGE AND LOOSE CONNECTIONS (INCLUDING SEALS AND BOOTS) 2-41
B5. CHECK MANUAL TRANSMISSION FOR OIL LEAKAGE (IN CASE OF LEAKAGE, CHECK THE OIL LEVEL) 2-41
B6. CHECK TRANSFER FOR OIL LEAKAGE (IN CASE OF LEAKAGE, CHECK THE OIL LEVEL) 2-42
B7. CHANGE GEAR OIL IN MANUAL TRANSMISSION 2-43
B8. CHANGE GEAR OIL IN TRANSFER 2-43
B9. CHECK REAR DIFFERENTIAL FOR OIL LEAKAGE (IN CASE OF LEAKAGE, CHECK THE OIL LEVEL) 2-44
B10. CHANGE GEAR OIL IN REAR DIFFERENTIAL 2-44
B11. CHECK EXHAUST PIPE CONNECTIONS FOR GAS LEAKAGE, AND CHECK PIPE INSTALLATION. 2-44
B12. CHECK FRONT TRANSAXLE FOR OIL LEAKAGE (In case of leakage, check the oil level) 2-45
B13. CHECK REAR TRANSAXLE FOR OIL LEAKAGE (In case of leakage, check the oil level) 2-45
B14. CHANGE FRONT TRANSAXLE OIL . 2-46
B15. CHANGE REAR TRANSAXLE OIL . . 2-46

OPERATIONS INSIDE THE VEHICLE 2-47

C1. CHECK BRAKE PEDAL AND CLUTCH PEDAL FOR FREE PLAY 2-47
C2. CHECK PARKING BRAKE LEVER STROKE AND PLAY 2-49
C3. REPLACE AIR PURIFIER FILTER 2-50

OPERATIONS OUTSIDE THE VEHICLE. 2-50

D1. CHECK WHEEL ALIGNMENT 2-50
D2. CHECK FRONT AND REAR WHEEL BEARINGS FOR PLAY 2-52
D3. CHECK BRAKE HOSES AND PIPES FOR LEAKAGE 2-52
D4. CHECK BRAKE PADS AND DISCS FOR WEAR 2-53
D5. CHECK FUEL HOSES AND PIPES FOR LEAKAGE OR DETERIORATION 2-55

OPERATIONS AFTER ENGINE IS WARMED UP 2-55

E1. CHECK FLUID LEVEL IN AUTOMATIC TRANSMISSION AND CVT 2-55
E2. CHANGE AUTOMATIC TRANSMISSION FLUID AND CVT FLUID 2-56
E3. CHANGE ENGINE OIL 2-59
E4. REPLACE ENGINE OIL FILTER 2-60
E5. CHECK EXHAUST GAS RECIRCULATION (EGR) SYSTEM 2-61
E6. CHECK ENGINE IDLING SPEED. 2-62
E7. CHECK CO CONCENTRATION. 2-63

OTHERS 2-65

F1. CHECK BODY CONDITION FOR DAMAGE 2-65
F2. CHECK THE COMMON RAIL ENGINE (SMALL INJECTION QUANTITY LEARNING) 2-65
F3. ROAD TEST 2-65

PERIODIC INSPECTION AND MAINTENANCE SCHEDULE

M6020100102344

For items which indicate both distance and time (in months), the inspection should be made at whichever (distance or time) comes first.

VEHICLES FOR EUROPE
<PETROL-POWERED VEHICLES>

Maintenance item			Maintenance operation	Maintenance interval	
OPERATIONS INSIDE THE ENGINE COMPARTMENT					
A1	Check drive belt for cracks, fraying, wear, and adjust its tension		Inspection	Every 40,000 km or every 2 years	
A4	Replace spark plugs	Iridium-tipped type	Replace	Every 100,000 km	
A5	Check valve clearance*1 (except vehicles with auto-lash adjuster)		Inspection	4B1 engine	Every 100,000 km
				4J1 engine	Every 60,000 km
A6	Check radiator hoses for damage and proper connection		Inspection	Every 40,000 km or every 2 years	
A7	Check engine coolant level in reservoir		Inspection	Every 40,000 km or every 2 years	
A8	Change engine coolant		Change	First 180,000 km or 9 years, thereafter every 120,000 km or 6 years	
A9	Check air cleaner element for clogging and damage		Inspection	Normal usage	Every 20,000 km or every 12 months
				Severe usage	Every 10,000 km or every 6 months
A10	Replace air cleaner element		Replace	Normal usage	Every 60,000 km or every 3 years
				Severe usage	More frequently
A11	Check fluid level in brake reservoir and clutch reservoir		Inspection	Every 20,000 km or every 12 months	
A12	Change brake fluid		Change	Every 40,000 km or every 2 years	
A13	Check battery condition		Inspection	Every 20,000 km or every 12 months	
A14	Replace fuel filter		Replace	Every 160,000 km or every 10 years	
OPERATIONS UNDER THE VEHICLE					
B1	Check suspension system for damage and looseness		Inspection	Every 20,000 km or every 12 months	
B2	Check suspension arm ball joints for play, and dust covers for damage		Inspection	Every 20,000 km or every 12 months	
B3	Check driveshaft boots for damage		Inspection	Normal usage	Every 40,000 km or every 2 years
				Severe usage	Every 10,000 km

Maintenance item		Maintenance operation	Maintenance interval	
B4	Check steering linkage for damage and loose connections (including seals and boots)	Inspection	Every 40,000 km or every 2 years	
B5	Check manual transmission for oil leakage (In case of leakage, check the oil level)	Inspection	Every 20,000 km or every 12 months	
B6	Check transfer for oil leakage (In case of leakage, check the oil level)	Inspection	Every 20,000 km or every 12 months	
B7	Change gear oil in manual transmission	Change	Normal usage	Every 200,000 km
			Severe usage	Every 100,000 km
B8	Change gear oil in transfer	Change	Normal usage	Every 80,000 km
			Severe usage	Every 40,000 km
B9	Check rear differential for oil leakage (In case of leakage, check the oil level)	Inspection	Every 20,000 km or every 12 months	
B10	Change gear oil in rear differential	Change	Normal usage	Every 80,000 km
			Severe usage	Every 40,000 km
B11	Check exhaust pipe connections for gas leakage, and check pipe installation	Inspection	Every 40,000 km or every 2 years	
OPERATIONS INSIDE THE VEHICLE				
C1	Check brake pedal and clutch pedal for free play	Inspection	Every 20,000 km or every 12 months	
C2	Check parking brake lever stroke and play	Inspection	Every 20,000 km or every 12 months	
C3	Replace air purifier filter	Replace	Normal usage	Every 20,000 km or every 12 months
			Severe usage	More frequently
OPERATIONS OUTSIDE THE VEHICLE				
D1	Check wheel alignment	Inspection	Every 20,000 km or every 12 months	
D2	Check front and rear wheel bearings for play	Inspection	Every 60,000 km or every 3 years	
D3	Check brake hoses and pipes for leakage	Inspection	Every 40,000 km or every 2 years	
D4	Check brake pads and discs for wear	Inspection	Normal usage	Every 20,000 km or every 12 months
			Severe usage	Every 10,000 km or every 6 months
D5	Check fuel hoses and pipes for leakage or deterioration	Inspection	Every 40,000 km or every 2 years	

Maintenance item		Maintenance operation	Maintenance interval	
OPERATIONS AFTER ENGINE IS WARMED UP				
E1	Check fluid level in automatic transmission and CVT	Inspection	Every 20,000 km or every 12 months	
E2	Change automatic transmission fluid and CVT fluid	Change	Normal usage	Every 80,000 km
			Severe usage	Every 40,000 km
E3	Change engine oil	Change	Normal usage	Every 20,000 km or every 12 months
			Severe usage	Every 10,000 km
E4	Replace engine oil filter	Replace	Normal usage	Every 20,000 km or every 12 months
			Severe usage	Every 10,000 km
OTHERS				
F1	Check body condition for damage	Inspection	Every year	
F3	Road test	Inspection	Every 20,000 km or every 12 months	

<DIESEL-POWERED VEHICLES>

Maintenance item		Maintenance operation	Maintenance interval	
OPERATIONS INSIDE THE ENGINE COMPARTMENT				
A1	Check drive belt for cracks, fraying, wear, and adjust its tension	Inspection	Every 40,000 km or every 2 years	
A2	Check intake air hose for damage (vehicles with turbocharger)	Inspection	Every 40,000 km or every 2 years	
A5	Check valve clearance*1 (except vehicles with auto-lash adjuster)	Inspection	Every 40,000km	
A6	Check radiator hoses for damage and proper connection	Inspection	Every 20,000 km or every 12 months	
A7	Check engine coolant level in reservoir	Inspection	Every 20,000 km or every 12 months	
A8	Change engine coolant	Change	First 180,000 km or 9 years, thereafter every 120,000 km or 6 years	
A9	Check air cleaner element for clogging and damage	Inspection	Normal usage	Every 20,000 km or every 12 months
			Severe usage	Every 10,000 km or every 6 months

Maintenance item		Maintenance operation	Maintenance interval	
A10	Replace air cleaner element	Replace	Normal usage	Every 40,000 km or every 2 years
			Severe usage	More frequently
A11	Check fluid level in brake reservoir and clutch reservoir	Inspection	Every 20,000 km or every 12 months	
A12	Change brake fluid	Change	Every 40,000 km or every 2 years	
A13	Check battery condition	Inspection	Every 20,000 km or every 12 months	
A14	Replace fuel filter	Replace	Every 60,000 km or every 3 years	
OPERATIONS UNDER THE VEHICLE				
B1	Check suspension system for damage and looseness	Inspection	Every 20,000 km or every 12 months	
B2	Check suspension arm ball joints for play, and dust covers for damage	Inspection	Every 20,000 km or every 12 months	
B3	Check driveshaft boots for damage	Inspection	Normal usage	Every 40,000 km or every 2 years
			Severe usage	Every 10,000 km
B4	Check steering linkage for damage and loose connections (including seals and boots)	Inspection	Every 40,000 km or every 2 years	
B5	Check manual transmission for oil leakage (In case of leakage, check the oil level)	Inspection	Every 20,000 km or every 12 months	
B6	Check transfer for oil leakage (In case of leakage, check the oil level)	Inspection	Every 20,000 km or every 12 months	
B7	Change gear oil in manual transmission	Change	Normal usage	Every 200,000 km
			Severe usage	Every 100,000 km
B8	Change gear oil in transfer	Change	Normal usage	Every 80,000 km
			Severe usage	Every 40,000 km
B9	Check rear differential for oil leakage (In case of leakage, check the oil level)	Inspection	Every 20,000 km or every 12 months	
B10	Change gear oil in rear differential	Change	Normal usage	Every 80,000 km
			Severe usage	Every 40,000 km
B11	Check exhaust pipe connections for gas leakage, and check pipe installation	Inspection	Every 40,000 km or every 2 years	

Maintenance item		Maintenance operation	Maintenance interval	
OPERATIONS INSIDE THE VEHICLE				
C1	Check brake pedal and clutch pedal for free play	Inspection	Every 20,000 km or every 12 months	
C2	Check parking brake lever stroke and play	Inspection	Every 20,000 km or every 12 months	
C3	Replace air purifier filter	Replace	Normal usage	Every 20,000 km or every 12 months
			Severe usage	More frequently
OPERATIONS OUTSIDE THE VEHICLE				
D1	Check wheel alignment	Inspection	Every 20,000 km or every 12 months	
D2	Check front and rear wheel bearings for play	Inspection	Every 60,000 km or every 3 years	
D3	Check brake hoses and pipes for leakage	Inspection	Every 40,000 km or every 2 years	
D4	Check brake pads and discs for wear	Inspection	Normal usage	Every 20,000 km or every 12 months
			Severe usage	Every 10,000 km or every 6 months
D5	Check fuel hoses and pipes for leakage or deterioration	Inspection	Every 40,000 km or every 2 years	
OPERATIONS AFTER ENGINE IS WARMED UP				
E1	Check fluid level in automatic transmission and CVT	Inspection	Every 20,000 km or every 12 months	
E2	Change automatic transmission fluid and CVT fluid	Change	Normal usage	Every 80,000 km
			Severe usage	Every 40,000 km
E3	Change engine oil	Change	Normal usage	Every 20,000 km or every 12 months
			Severe usage	Every 10,000 km
E4	Replace engine oil filter	Replace	Normal usage	Every 20,000 km or every 12 months
			Severe usage	Every 10,000 km
OTHERS				
F1	Check body condition for damage	Inspection	Every year	
F2	Check the common rail engine (small injection quantity learning)	Inspection	Every 20,000 km or every 12 months	
F3	Road test	Inspection	Every 20,000 km or every 12 months	

<PHEV>

Maintenance item			Maintenance operation	Maintenance interval	
OPERATIONS INSIDE THE ENGINE COMPARTMENT					
A1	Check drive belt for cracks, fraying, wear, and adjust its tension		Inspection	Every 40,000 km or every 2 years	
A4	Replace spark plugs	Iridium-tipped type	Replace	Every 100,000 km	
A5	Check valve clearance*1 (except vehicles with auto-lash adjuster)		Inspection	Every 100,000 km	
A6	Check radiator hoses for damage and proper connection		Inspection	Every 40,000 km or every 2 years	
A7	Check engine coolant level in reservoir		Inspection	Every 40,000 km or every 2 years	
A8	Change engine coolant		Change	First 180,000 km or 9 years, thereafter every 120,000 km or 6 years	
A9	Check air cleaner element for clogging and damage		Inspection	Normal usage	Every 20,000 km or every 12 months
				Severe usage	Every 10,000 km or every 6 months
A10	Replace air cleaner element		Replace	Normal usage	Every 60,000 km or every 3 years
				Severe usage	More frequently
A11	Check fluid level in brake reservoir and clutch reservoir		Inspection	Every 20,000 km or every 12 months	
A12	Change brake fluid		Change	Every 40,000 km or every 2 years	
A13	Check battery condition (auxiliary battery)		Inspection	Every 20,000 km or every 12 months	
A14	Replace fuel filter		Replace	Every 160,000 km or every 10 years	
A15	Check high voltage cable for damage and proper connection		Inspection	Every 40,000 km or every 2 years	
A16	Check front motor for cooling oil leakage		Inspection	Every 20,000 km or every 12 months	
A17	Check rear motor coolant level in reservoir		Inspection	Every 40,000 km or every 2 years	
A18	Change rear motor coolant		Inspection	Every 20 years	
OPERATIONS UNDER THE VEHICLE					
B1	Check suspension system for damage and looseness		Inspection	Every 20,000 km or every 12 months	
B2	Check suspension arm ball joints for play, and dust covers for damage		Inspection	Every 20,000 km or every 12 months	
B3	Check driveshaft boots for damage		Inspection	Normal usage	Every 40,000 km or every 2 years
				Severe usage	Every 10,000 km
B4	Check steering linkage for damage and loose connections (including seals and boots)		Inspection	Every 40,000 km or every 2 years	

Maintenance item		Maintenance operation	Maintenance interval	
B11	Check exhaust pipe connections for gas leakage, and check pipe installation	Inspection	Every 40,000 km or every 2 years	
B12	Check front transaxle for oil leakage (in case of leakage, check the oil level)	Inspection	Every 20,000 km or every 12 months	
B13	Check rear transaxle for oil leakage (in case of leakage, check the oil level)	Inspection	Every 20,000 km or every 12 months	
B14	Change front transaxle oil	Change	Severe usage	Every 40,000 km
B15	Change rear transaxle oil	Change	Severe usage	Every 40,000 km
OPERATIONS INSIDE THE VEHICLE				
C1	Check brake pedal and clutch pedal for free play	Inspection	Every 20,000 km or every 12 months	
C2	Check parking brake lever stroke and play	Inspection	Every 20,000 km or every 12 months	
C3	Replace air purifier filter	Replace	Normal usage	Every 20,000 km or every 12 months
			Severe usage	More frequently
OPERATIONS OUTSIDE THE VEHICLE				
D1	Check wheel alignment	Inspection	Every 20,000 km or every 12 months	
D2	Check front and rear wheel bearings for play	Inspection	Every 60,000 km or every 3 years	
D3	Check brake hoses and pipes for leakage	Inspection	Every 40,000 km or every 2 years	
D4	Check brake pads and discs for wear	Inspection	Normal usage	Every 20,000 km or every 12 months
			Severe usage	Every 10,000 km or every 6 months
D5	Check fuel hoses and pipes for leakage or deterioration	Inspection	Every 40,000 km or every 2 years	
OPERATIONS AFTER ENGINE IS WARMED UP				
E3	Change engine oil	Change	Normal usage	Every 20,000 km or every 12 months
			Severe usage	Every 10,000 km
E4	Replace engine oil filter	Replace	Normal usage	Every 20,000 km or every 12 months
			Severe usage	Every 10,000 km
E5	Check exhaust gas recirculation (EGR) system	Inspection	Every 20,000 km or every 12 months	
OTHERS				
F1	Check body condition for damage	Inspection	Every year	
F3	Road test	Inspection	Every 20,000 km or every 12 months	

VEHICLES FOR GENERAL EXPORT

Maintenance item			Maintenance operation	Maintenance interval	
OPERATIONS INSIDE THE ENGINE COMPARTMENT					
A1	Check drive belt for cracks, fraying, wear, and adjust its tension		Inspection	Every 20,000 km or every 12 months	
A3	Check operation of crankcase emission control system		Inspection	Every 40,000 km or every 2 years	
A4	Replace spark plugs	Iridium-tipped type	Replace	Every 100,000 km	
A5	Check valve clearance*1 (except vehicles with auto-lash adjuster)		Inspection	4B1 engine	Every 100,000 km
				4J1 engine	Every 60,000 km
A6	Check radiator hoses for damage and proper connection		Inspection	Every 40,000 km or every 2 years	
A7	Check engine coolant level in reservoir		Inspection	Every 20,000 km or every 12 months	
A8	Change engine coolant		Change	First 160,000 km or 8 years, thereafter every 100,000 km or 5 years	
A9	Check air cleaner element for clogging and damage		Inspection	Normal usage	Every 20,000 km or every 12 months
				Severe usage	Every 10,000 km or every 6 months
A10	Replace air cleaner element		Replace	Normal usage	Every 40,000 km or every 2 years
				Severe usage	More frequently
A11	Check fluid level in brake reservoir and clutch reservoir		Inspection	Every 10,000 km or every 6 months	
A12	Change brake fluid		Change	Every 40,000 km or every 2 years	
A13	Check battery condition		Inspection	Every 10,000 km or every 6 months	
A14	Replace fuel filter		Replace	Every 60,000 km or every 3 years	
OPERATIONS UNDER THE VEHICLE					
B1	Check suspension system for damage and looseness		Inspection	Every 20,000 km or every 12 months	
B2	Check suspension arm ball joints for play, and dust covers for damage		Inspection	Every 20,000 km or every 12 months	
B3	Check driveshaft boots for damage		Inspection	Normal usage	Every 20,000 km or every 12 months
				Severe usage	Every 10,000 km or every 6 months
B4	Check steering linkage for damage and loose connections (including seals and boots)		Inspection	Every 20,000 km or every 12 months	

Maintenance item		Maintenance operation	Maintenance interval	
B5	Check manual transmission for oil leakage (In case of leakage, check the oil level)	Inspection	Every 20,000 km or every 12 months	
B6	Check transfer for oil leakage (In case of leakage, check the oil level)	Inspection	Every 20,000 km or every 12 months	
B7	Change gear oil in manual transmission	Change	Normal usage	Every 200,000 km
			Severe usage	Every 100,000 km
B8	Change gear oil in transfer	Change	Normal usage	Every 80,000 km
			Severe usage	Every 40,000 km
B9	Check rear differential for oil leakage (In case of leakage, check the oil level)	Inspection	Every 20,000 km or every 12 months	
B10	Change gear oil in rear differential	Change	Normal usage	Every 80,000 km
			Severe usage	Every 40,000 km
B11	Check exhaust pipe connections for gas leakage, and check pipe installation	Inspection	Every 20,000 km or every 12 months	
OPERATIONS INSIDE THE VEHICLE				
C1	Check brake pedal and clutch pedal for free play	Inspection	Every 10,000 km or every 6 months	
C2	Check parking brake lever stroke and play	Inspection	Every 20,000 km or every 12 months	
C3	Replace air purifier filter	Replace	Every 15,000 km or every 12 months	
OPERATIONS OUTSIDE THE VEHICLE				
D1	Check wheel alignment	Inspection	Every 20,000 km or every 12 months	
D2	Check front and rear wheel bearings for play	Inspection	Every 60,000 km or every 3 years	
D3	Check brake hoses and pipes for leakage	Inspection	Every 20,000 km or every 12 months	
D4	Check brake pads and discs for wear	Inspection	Normal usage	Every 20,000 km or every 12 months
			Severe usage	Every 5,000 km or every 6 months
D5	Check fuel hoses and pipes for leakage or deterioration	Inspection	Every 40,000 km or every 2 years	

Maintenance item		Maintenance operation	Maintenance interval	
OPERATIONS AFTER ENGINE IS WARMED UP				
E1	Check fluid level in automatic transmission and CVT	Inspection	Every 20,000 km or every 12 months	
E2	Change automatic transmission fluid and CVT fluid	Change	Severe usage	Every 40,000 km
E3	Change engine oil	Change	Normal usage	Every 15,000 km or every 12 months
			Severe usage	Every 5,000 km
E4	Replace engine oil filter	Replace	Normal usage	Every 15,000 km or every 12 months
			Severe usage	Every 5,000 km
E6	Check engine idling speed	Inspection	Every 20,000 km or every 12 months	
E7	Check CO concentration (petrol-powered vehicles)	Inspection	Every 20,000 km or every 12 months	
OTHERS				
F1	Check body condition for damage	Inspection	Every year	
F3	Road test	Inspection	Every 20,000 km or every 12 months	

NOTE:

**1: If found any noise from the valve any time, please check the valve clearance.*

"Severe usage" specifications apply to only vehicles used under severe operating conditions.
Severe operating conditions include the following cases:

1. *Driving in dusty area.*
2. *Driving on rough roads, on submerged roads, or hilly areas.*
3. *Driving cold zones.*
4. *Engine idling for a long time or short-distance travel during cold weather.*
5. *Frequent, sudden application of brakes.*
6. *Towing of a trailer.*
7. *Use as a taxi or as a rent-a-car.*
8. *When more than 50% of driving is in heavy city traffic and the ambient temperature is 32℃ or more.*
9. *When more than 50% of driving is at 120 km/h or more and the ambient temperature is 30℃ or more.*

OPERATIONS INSIDE THE ENGINE COMPARTMENT

A1. CHECK DRIVE BELT FOR CRACKS, FRAYING, WEAR, AND ADJUST ITS TENSION

M6020202900842

DRIVE BELT CONDITION

Check the whole rounds of the drive belt for cracks, fraying and wear.

DRIVE BELT TENSION CHECK <4B1 (except PHEV) and 4J1>

⚠ CAUTION

Check the drive belt tension after turning the crankshaft clockwise one turn or more.

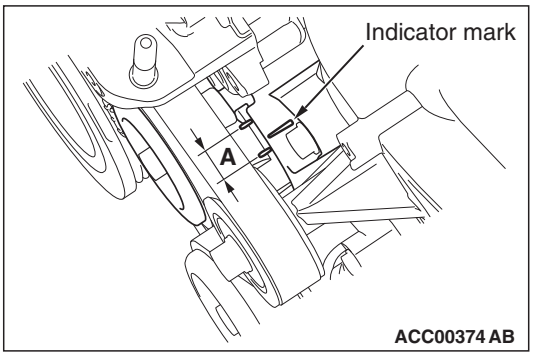

1. Make sure that the indicator mark on the drive belt auto-tensioner is within the area marked with A in the illustration.
2. If the mark is out of the area A, replace the drive belt.

   NOTE: The drive belt tension adjustment is not necessary as the drive belt auto-tensioner is adopted.

DRIVE BELT TENSION CHECK <4N1>

⚠ CAUTION

Check the drive belt tension after turning the crankshaft clockwise one turn or more.

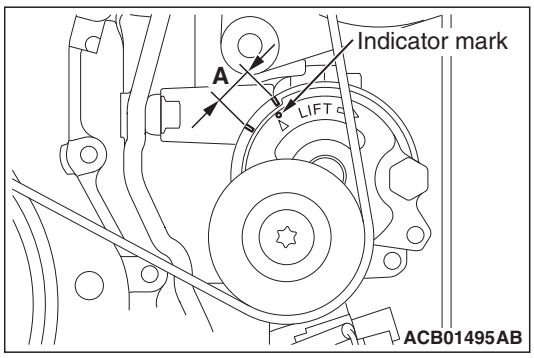

1. Make sure that the indicator mark is within the area marked with A in the illustration.
2. If the mark is out of the area, replace the drive belt.

   NOTE: The drive belt tension check is not necessary as drive belt auto-tensioner is adopted.

WATER PUMP DRIVE BELT TENSION CHECK <4N1>

NOTE:

- *An elastic stretch-type belt is used for the water pump drive, therefore, the tension adjustment is not necessary.*
- *Perform the water pump drive belt tension check according to the following procedures.*

<When the vibration frequency is measured: recommendation>

⚠ CAUTION

- **When measuring the vibration frequency, make sure that the engine is cold.**
- **Measure the vibration frequency after turning the crankshaft clockwise one turn or more.**

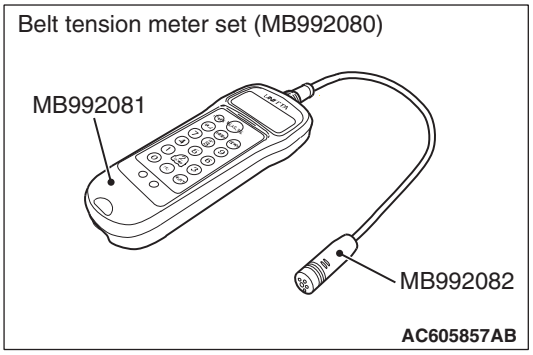

1. Connect the special tool microphone assembly (MB992082) to the special tool belt tension meter (MB992081) of the special tool belt tension meter set (MB992080).
2. Press the "POWER" button to turn on the power supply.
3. Press number key 1. Check to ensure that "No. 01" appears on the upper left of the display and that the following numeric values are displayed for individual items (M, W, and S):

   M 000.9 g/m

   W 010.0 mm/R

   S 0100 mm

   If numeric values have not been entered (new tool), set them according to the belt specifications as shown below. Once you set them, you do not have to set them again. The settings remain undeleted even after battery replacement.

   NOTE: This operation is to temporarily set the preset data such as the belt specifications, because if the measurement is taken without input of the belt specifications, conversion to tension value (N) cannot be made, resulting in judgement of error.

   <Setting procedure>

   (1) Press down the "MASS" button till the belt mass select display appears.

   (2) Press the "UP" or "DOWN" button to select "01 1.5GT 0.9" and press the "MEASURE" button to decide it. Check to ensure that "M 000.9 g/m" is displayed.

   (3) Press the "WIDTH" button to change to the belt width input display.

   (4) Press number keys 0, 1, 0, and 0 sequentially, and press the "SELECT" button to apply them. Check to ensure that "W 010.0 mm/R" appears on the display.

   (5) Press the "SPAN" button to change to the span length input display.

   (6) Press number keys 0, 1, 0, and 0 sequentially, and press the "SELECT" button to apply them. Check to ensure that "S 0100 mm" appears on the display.

4. Press "Hz" button twice to change the display to the frequency display (Hz).

⚠ CAUTION

- **Do not allow any contaminants such as water or oil to get onto the microphone.**
- **If strong gusts of wind blow against the microphone or if there are any loud sources of noise nearby, the values measured by the microphone may not correspond to actual values.**
- **If the microphone is touching the belt while the measurement is being made, the values measured by the microphone may not correspond to actual values.**
- **Do not take the measurement while the vehicle's engine is running.**

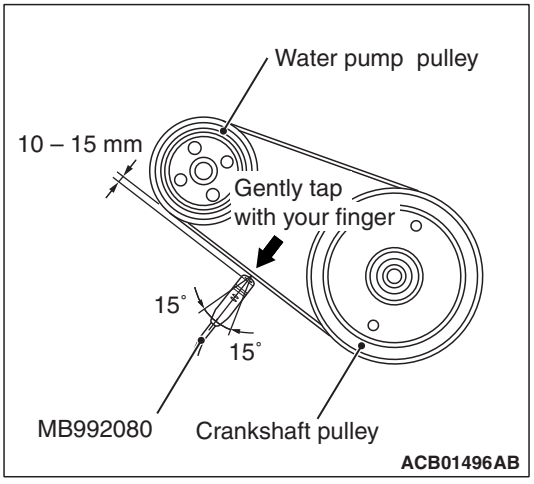

5. Hold the special tool MB992080 to the middle of the drive belt between the pulleys (at the place indicated by arrow), approximately 10 – 15 mm away from the rear surface of the drive belt so that it is perpendicular to the drive belt (within an angle of ± 15°).
6. Press the "MEASURE" button.

7. Gently tap the middle of the drive belt between the pulleys (the place indicated by the arrow) with your finger as shown in the illustration, and measure that the vibration frequency of the drive belt is within the standard value.

   Standard value (Reference):
   113 – 264 Hz <M/T>
   141 – 249 Hz <A/T>

   NOTE: To take the measurement repeatedly, fillip the water pump drive belt again.
8. After the completion of the measurement, press and hold the "POWER" button to turn off the power supply.
9. If not within the standard value, replace the water pump drive belt.

<When the tension is measured>

⚠ CAUTION

- **When measuring the tension, make sure that the engine is cold.**
- **Measure the tension after turning the crankshaft clockwise one turn or more.**

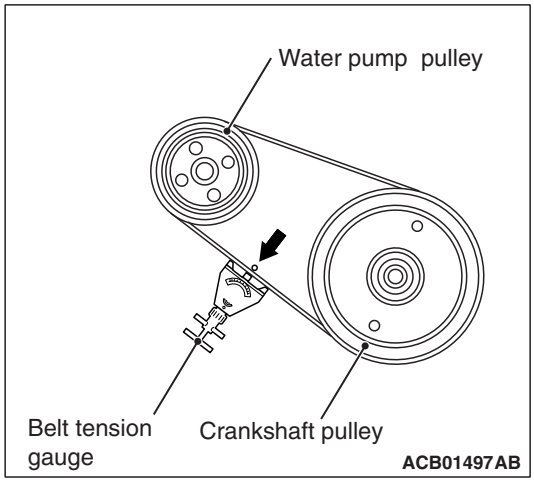

1. Use a belt tension gauge in the middle of the drive belt between the pulleys shown in the figure (at the place indicated by the arrow) to check that the drive belt tension is within the standard value.

   Standard value (Reference):
   100 – 550 N <M/T>
   158 – 496 N <A/T>
2. If not within the standard value, replace the water pump drive belt.

WATER PUMP DRIVE BELT TENSION CHECK <4B1-PHEV>

NOTE: An elastic stretch-type belt is used for the water pump drive belt, therefore, the tension adjustment is not necessary.
Check the water pump drive belt tension in the following procedure.

Standard value:

Item	When checked	When adjusted	When replaced
Vibration frequency Hz (Reference)	116 – 337		
Deflection mm (Reference)	Less than 20.5		

<When the vibration frequency is measured {Special tool (MB992080) is used}: Recommendation>

⚠ CAUTION

- **When measuring the vibration frequency, make sure that the engine is cold.**
- **Measure the vibration frequency after turning the crankshaft clockwise one turn or more.**

NOTE: The vibration frequency measuring method is recommended for check of the water pump drive belt tension.

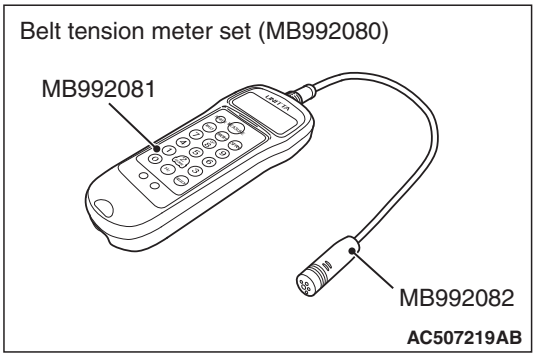

1. Connect the Special tool microphone assembly (MB992082) to the Special tool belt tension meter (MB992081) of the Special tool belt tension meter set (MB992080).
2. Press the "POWER" button to turn on the power supply.

3. Press number key 1. Check to ensure that "No. 01" appears on the upper left of the display and that the following numeric values are displayed for individual items (M, W, and S):

   M 000.9 g/m

   W 010.0 mm/R

   S 0100 mm

   If numeric values have not been entered (new tool), set them according to the belt specifications as shown below. Once you set them, you do not have to set them again. The settings remain undeleted even after battery replacement.

   NOTE: This operation is to temporarily set the preset data such as the belt specifications, because if the measurement is taken without input of the belt specifications, conversion to tension value (N) cannot be made, resulting in judgement of error.

   <Setting procedure>

   (1) Press down the "MASS" button till the belt mass select display appears.

   (2) Press the "UP" or "DOWN" button to select "01 1.5GT 0.9" and press the "MEASURE" button to decide it.

   Check to ensure that "M 000.9 g/m" is displayed.

   (3) Press the "WIDTH" button to change to the belt width input display.

   (4) Press number keys 0, 1, 0, and 0 sequentially, and press the "SELECT" button to apply them. Check to ensure that "W 010.0 mm/R" appears on the display.

   (5) Press the "SPAN" button to change to the span length input display.

   (6) Press number keys 0, 1, 0, and 0 sequentially, and press the "SELECT" button to apply them. Check to ensure that "S 0100 mm" appears on the display.

4. Press "Hz" button twice to change the display to the frequency display (Hz).

⚠ CAUTION

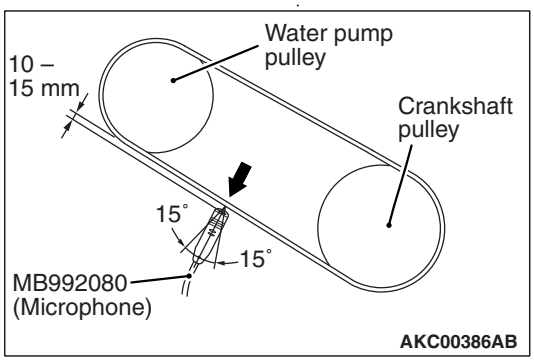

- **The temperature of the surface of the belt should be as close as possible to normal temperature.**
- **Do not let any contaminants such as water or oil get onto the microphone.**
- **If strong gusts of wind blow against the microphone or if there is loud sources of noise nearby, the values measured by the microphone may not correspond to actual values.**
- **If the microphone is touching the belt while the measurement is being made, the values measured by the microphone may not correspond to actual values.**
- **Do not take the measurement while the vehicle's engine is running.**

5. Hold the microphone to the middle of the drive belt between the pulleys (at the place indicated by the arrow), about 10 – 15 mm away from the rear surface of the belt and so that it is perpendicular to the belt (within an angle of ± 15 °).
6. Press the "MEASURE" button.
7. Gently tap the middle of the belt between the pulleys (the place indicated by the arrow) with your finger as shown in the illustration, and check that the vibration frequency of the belt is within the standard value.

   NOTE: To take the measurement repeatedly, fillip the belt again.
8. After the completion of the measurement, press and hold the "POWER" button to turn off the power supply.
9. If not within the standard value, replace the water pump drive belt.

<Belt deflection check>

⚠ CAUTION

- **When measuring the deflection, make sure that the engine is cold.**
- **Measure the deflection after turning the crankshaft clockwise one turn or more.**

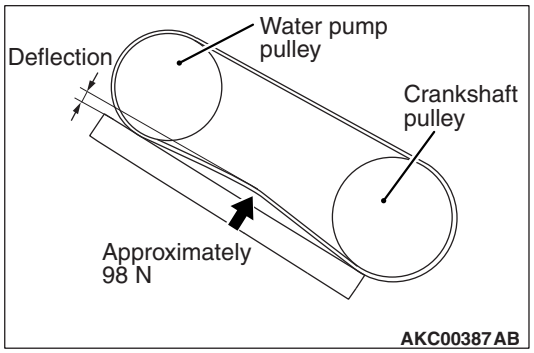

NOTE: The belt deflection check should be just an emergency measure in case that you do not have tools for measuring the vibrational frequency.

1. Apply approximately 98 N of force to the middle of the water pump drive belt between the pulleys (at the place indicated by the arrow) and check that the amount of deflection is within the standard value.
2. If not within the standard value, replace the water pump drive belt.

A2. CHECK INTAKE AIR HOSE FOR DAMAGE (VEHICLES WITH A TURBOCHARGER)

M6020200500536

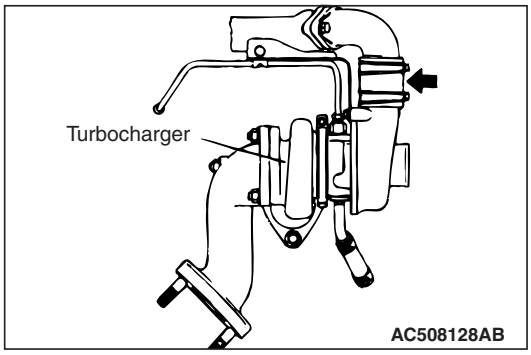

1. Inspect the intake air hoses for cracks or damage.

A3. CHECK OPERATION OF CRANKCASE EMISSION CONTROL SYSTEM

M6020200700994

BREATHER HOSE

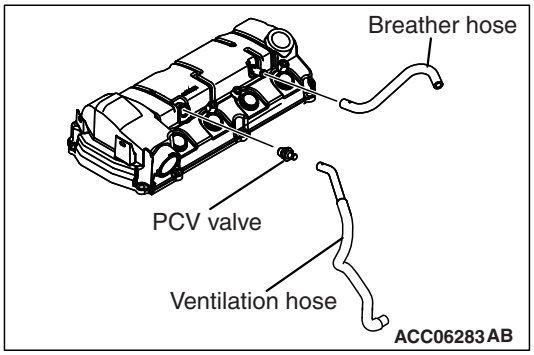

1. Inspect the breather hose for cracks or damage.
2. Clean the inside of the breather hose if necessary.
3. Inspect the ventilation filter for clogging.

VENTILATION HOSE

1. Check entire circumference and length of hoses using a mirror as required.
2. Check all clamps for tightness and the connections for leakage.
3. Hoses should be replaced immediately if there is any evidence of deterioration or damage.

POSITIVE CRANKCASE VENTILATION SYSTEM CHECK

1. Remove the ventilation hose from the PCV (Positive crankcase ventilation) valve.
2. Remove the PCV valve from the rocker cover.
3. Reinstall the PCV valve at the ventilation hose.
4. Start the engine and run at idle.

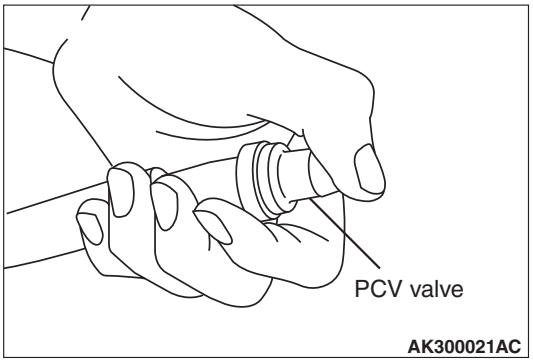

5. Place finger at the opening of the PCV valve and check that vacuum of the intake manifold is felt.
   NOTE: At this moment, the plunger in the PCV valve moves back and forth.
6. If vacuum is not felt, clean the PCV valve or replace it.
7. Apply a small amount of new engine oil to the O-ring on the PCV valve, and tighten to the specified torque.
   Tightening torque: 2.5 ± 0.4 N·m

PCV VALVE CHECK

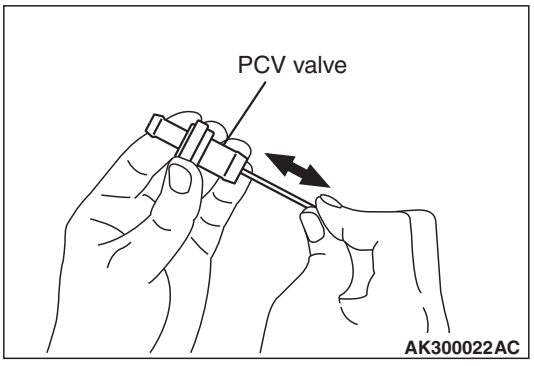

1. Insert a thin rod into the PCV valve from the side shown in the illustration (rocker cover installation side), and move the rod back and forth to check that the plunger moves.
2. If the plunger does not move, there is clogging in the PCV valve. In this case, clean or replace the PCV valve.

A4. REPLACE SPARK PLUGS

M6020200800805

After removing old spark plugs, install new ones and tighten them at the specified torque.

A5. CHECK VALVE CLEARANCE (EXCEPT VEHICLES WITH AUTO-LASH ADJUSTER)

M6020202401130

<4B1>

NOTE: Perform the valve clearance check and adjustment at the engine cold state.

1. Remove all ignition coils.
2. Remove the cylinder head cover.

⚠ CAUTION
Turn the crankshaft always clockwise.

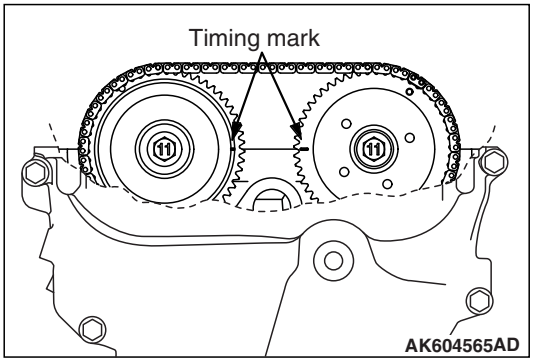

3. Turn the crankshaft clockwise, and align the timing mark on the exhaust camshaft sprocket against the upper face of the cylinder head as shown in Figure. Therefore, No.1 cylinder goes to the compression top dead centre.

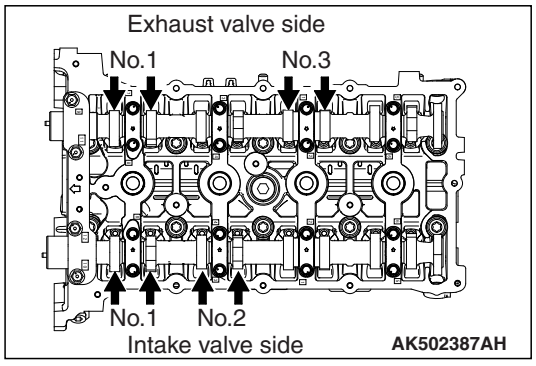

4. Using a thickness gauge, measure the valve clearance with the arrow shown in Figure. If deviated from the standard value, make note for the valve clearance.
   Standard value:
   Intake valve 0.20 ± 0.03 mm
   Exhaust valve 0.30 ± 0.03 mm

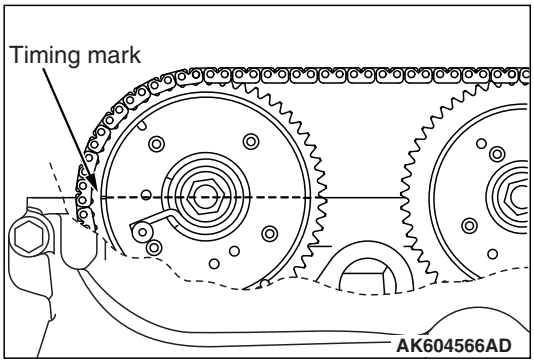

5. Turn the crankshaft clockwise 360 degrees, and put the timing mark on the exhaust camshaft sprocket in position shown in Figure. Therefore, No.4 cylinder goes to the compression top dead centre.

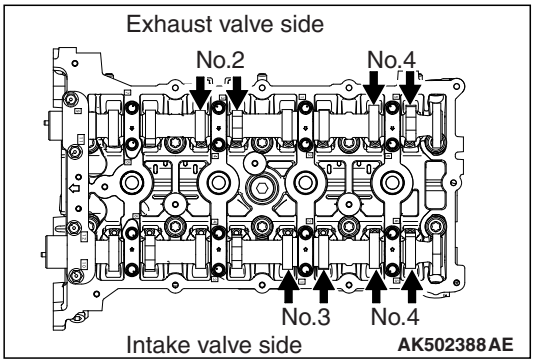

6. Check the valve clearance with the arrow shown in Figure. In the same procedure as 4.
7. If the valve clearance is deviated from the standard value, remove the camshaft and the valve tappet.

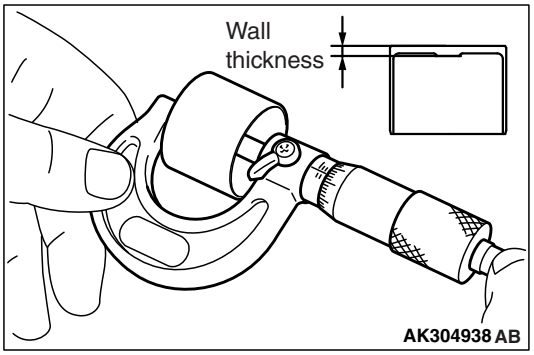

8. Using a micrometer, measure the thickness of the removed valve tappet.
9. Calculate the thickness of the newly installed valve tappet through the following equation.

   A: thickness of newly installed valve tappet

   B: thickness of removed valve tappet

   C: measured valve clearance

   Equation
   Intake valve: A = B + (C − 0.20 mm)
   Exhaust valve: A = B + (C − 0.30 mm)

   NOTE:

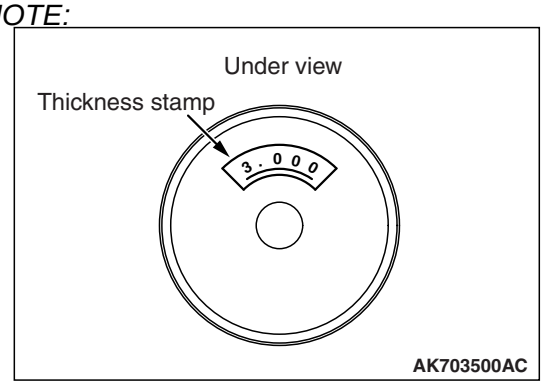

   The valve tappet ranges 3,000 − 3,690 mm and has 47 types per 0.015 mm. The thickness below a decimal point is stamped on the reverse side of the valve tappet.

10. Install the valve tappet selected through the procedure 9, and put the camshaft in position.
11. After installing the timing chain, measure the valve clearance using the procedure 3 to 6. Confirm the clearance is within the standard value.

⚠ CAUTION
Completely remove all the old liquid gasket, which might be remaining among the components.

12. Remove any liquid gasket remaining on the cylinder head cover, the timing chain case and the cylinder head.
13. Using white gasoline and so on, degrease the cylinder head cover, timing chain case and cylinder head.

⚠ CAUTION

The cylinder head cover should be installed within 3 minutes of applying liquid gasket.

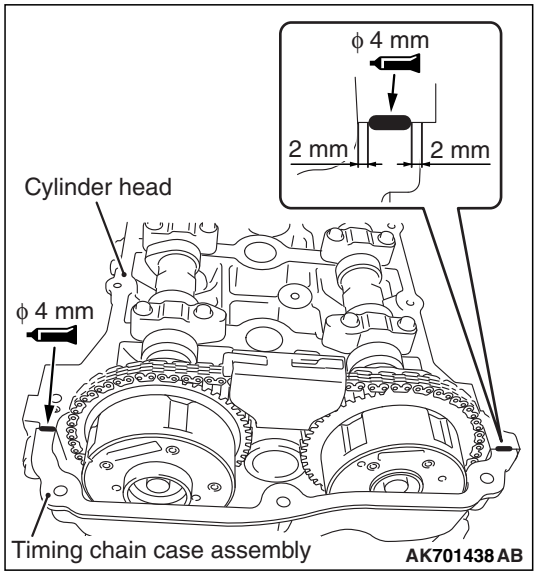

14.Apply a 4 mm bead of liquid gasket as illustrated.

Specified sealant:
ThreeBond 1217G or equivalent

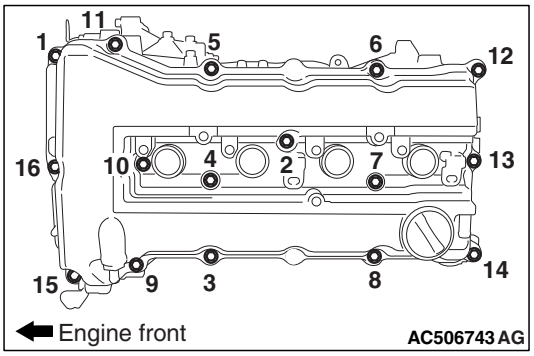

15. Install the cylinder head cover and tighten the tightening bolts using the following procedures.
    (1) Temporarily tighten to the following torque in order shown in the illustration.

    Tightening torque: 3.0 ± 1.0 N·m

    (2) Tighten to the specified torque in order shown in the illustration.

    Specified torque: 5.5 ± 0.5 N·m

16.Install the ignition coils.

<4J1>

NOTE: The inlet valve side has the inlet continuous variable valve lift system. The oil clearance between the arm and the shaft makes it difficult to measure the valve clearance with the usual feeler gauge. Therefore, use the dial gauge and check the amount of valve lift.

1. Let the engine be in cold state.
2. Turn the ignition switch to the "LOCK" (OFF) position.
3. Remove the rocker cover assembly.

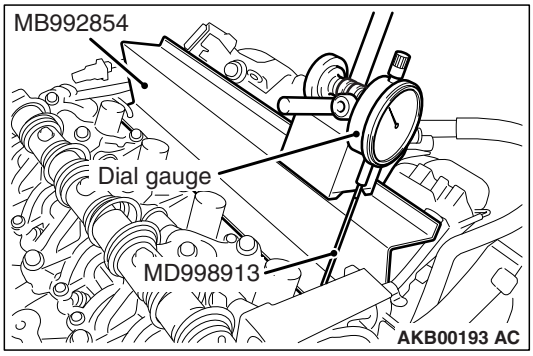

4. Install the special tool magnet base plate (MB992854) to the upper face of the cylinder head at the inlet side.

   NOTE: At that time, remove the injector connector and the fixed portion of the harness bracket so that the engine harness cannot interfere with the installation.
5. Install the special tool dial gauge extension (MD998913) to the dial gauge.
6. When installing the dial gauge to the magnet base plate, the dial gauge must have almost the same angle as the inlet valve has.

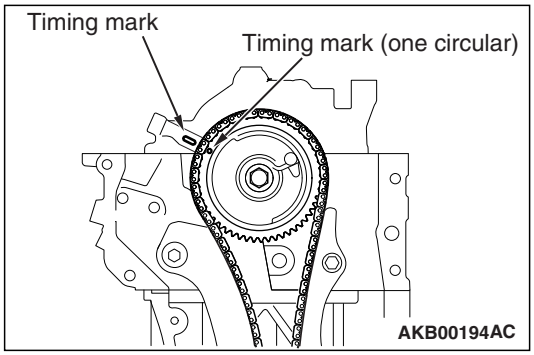

7. Rotate the crankshaft clockwise and align the timing mark of the rocker shaft holder with the one circular timing mark of the V.V.T. sprocket. Therefore, the No. 1 cylinder is set at the top dead centre on its compression stroke.

8. For the No. 1 cylinder inlet valve, check and adjust the valve clearance according to the following procedures.

⚠ CAUTION

- **Never loosen the five Torx bolts at the upper portions of the rocker arm and camshaft assembly.**
- **Never loosen the minimum lift stopper.**
- **When rotating the coupling, do not apply the torque more than 3 N·m to prevent the damage.**
- **Do not forcibly push the worm wheel to the minimum lift stopper and the maximum lift stopper.**

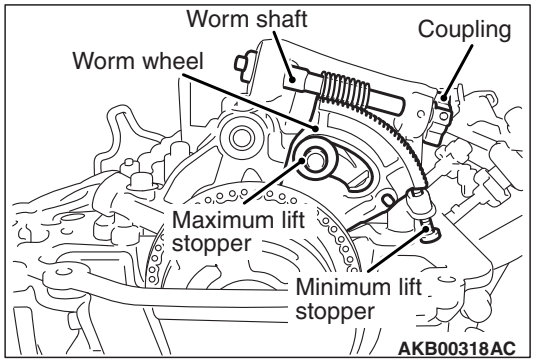

9. Slowly rotate the coupling clockwise. When lightly touching the worm wheel to the minimum lift stopper, stop the worm wheel at the position shown in the illustration.

   NOTE: When rotating the coupling clockwise, the worm wheel should move in the minimum lift direction. When rotating the coupling anti-clockwise, the worm wheel should move in the maximum lift direction.

   NOTE:

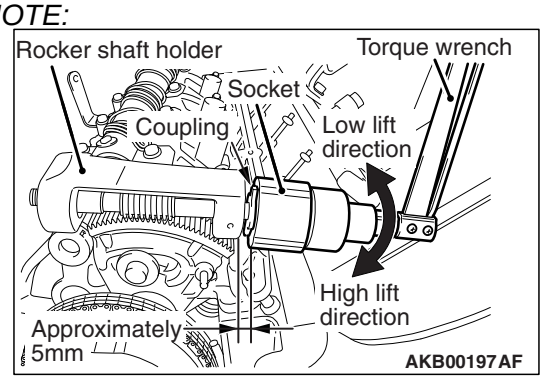

   When manually rotating the coupling, insert a 12-point socket (24 mm) into the position on the coupling approximately 5 mm away from the rocker shaft holder. Connect the mini torque wrench and slowly rotate them.

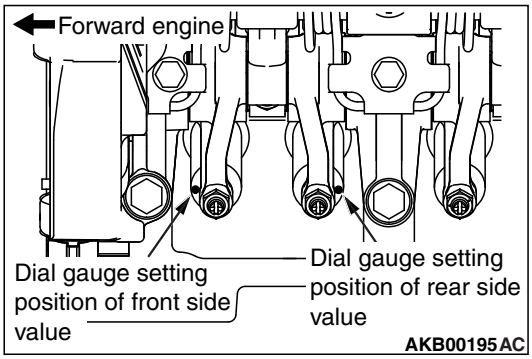

10. Set the dial gauge on the upper face of the valve spring retainer at the forward engine side. Set the dial gauge to 0.

    NOTE: As shown in the illustration, prevent the measurement error caused by the tilted valve, install the rocker arm to the outside of the rocker arm.

⚠ CAUTION

- **When rotating the coupling, do not apply the torque more than 3 N·m to prevent the damage.**
- **Do not forcibly push the worm wheel to the minimum lift stopper and the maximum lift stopper.**

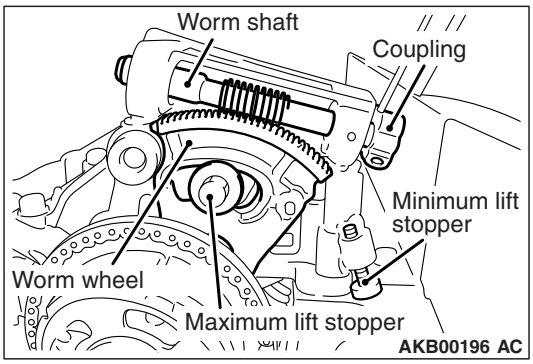

11. Slowly rotate the coupling. Place the worm wheel as shown in the illustration so that the centre of the worm wheel gear can engage with the worm shaft (at around the middle lift position).

    NOTE: When rotating the coupling clockwise, the worm wheel should move in the minimum lift direction. When rotating the coupling anti-clockwise, the worm wheel should move in the maximum lift direction.

⚠ CAUTION

- **Straightly insert the feeler gauge in the vertical direction not to touch the rocker arm roller guide.**
- **When inserting the feeler gauge too much, you cannot pull out the feeler gauge after the adjustment. Do not insert the feeler gauge by more than 5 mm.**

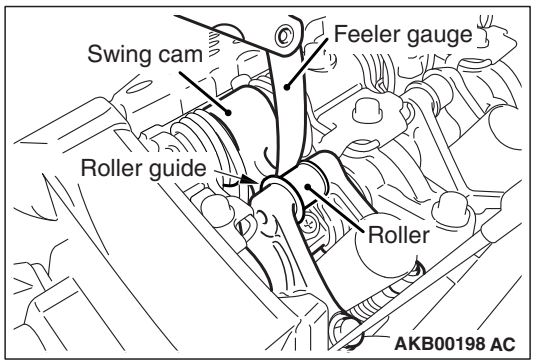

12.Pushing the feeler gauge with 0.15 mm in thickness between the swing cam and the roller of the rocker arm, rotate the coupling clockwise. Rotate the worm wheel to the minimum lift side. Insert the feeler gauge top by approximately 5 mm.

NOTE: If the valve clearance is excessive caused by the loosened adjusting screw and also if the feeler gauge can easily be inserted, perform the adjustment according to the overhaul valve clearance adjustment procedures.

NOTE: If not easily inserting the feeler gauge, you can insert the feeler gauge more easily by rotating the crankshaft clockwise 2 revolutions with pushing the feeler gauge.

⚠ CAUTION

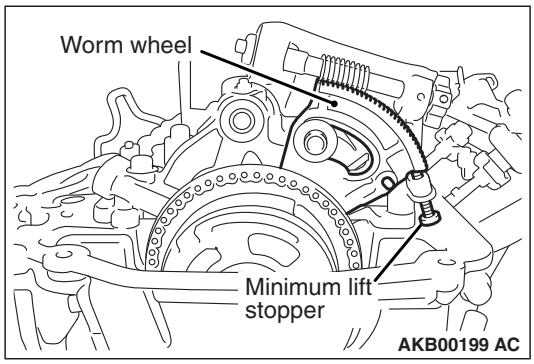

Do not forcibly push the worm wheel to the minimum lift stopper.

13.Check the worm wheel stopping at the position, as shown in the illustration, lightly touching to the minimum lift stopper. Check that the feeler gauge is securely inserted.

14.Check that the dial gauge reading is within the standard value.

Standard value: −0.11 ± 0.03 mm

NOTE: By inserting the 0.15 mm feeler gauge, the 0.26 mm-stroke occurs at the rocker arm adjusting screw side. Therefore, the valve clearance at the inlet side can be calculated by the following calculating formula using the dial gauge reading.

Calculating formula:
valve clearance = 0.26 mm + (dial gauge reading)
<Example> If the dial gauge reading is −0.11 mm,
valve clearance = 0.26 mm + (−0.11) = 0.15 mm

15.If the dial gauge reading is not within the standard value, perform the adjustment according to the following procedures.

16.Loosen the rocker arm lock nut at the forward engine side. Pull up the adjusting screw once. From the upper portion of the adjusting screw, sufficiently apply the engine oil between the lower adjusting screw end and the valve axis end so that the engine oil can be provided enough. And then, perform the adjustment by rotating the adjusting screw so that the dial gauge can read −0.11 mm.

17.After the adjustment, hold the driver to prevent the adjustment screw from rotating. Temporarily tighten the lock nut. Rotate the coupling anti-clockwise. Return the worm wheel to around the middle lift position. Pull out the feeler gauge.

18.For the valve at the backward engine side, check the valve clearance in the same procedure as that of the valve at the forward engine side. If the valve clearance is not within the standard value, perform the adjustment in the same procedure as that of the valve at the forward engine side.

19.After the adjustment, hold the driver to prevent the adjustment screw from rotating. Tighten the lock nut to the specified torque. And then, check that the dial gauge reading does not change.

Tightening torque: 9.0 ± 1.0 N·m

20.Check again the valve clearance at the forward engine side. If the valve clearance is not within the standard value, perform the adjustment in the same procedure as the first adjustment.

21.After the adjustment, hold the driver to prevent the adjustment screw from rotating. Tighten the lock nut to the specified torque. And then, check that the dial gauge reading does not change.

Specified torque: 9.0 ± 1.0 N·m

22.Rotate the coupling anti-clockwise. Return the worm wheel to around the middle lift position. Pull out the feeler gauge.

23.For the No. 2 cylinder inlet valve, check and adjust the valve clearance according to the procedures from Step 9 to Step 22.

24.For the No. 1 and No.3 cylinder exhaust valves, check and adjust the valve clearance according to the following procedures.

25.Insert the feeler gauge between the exhaust valve axis end and the adjusting screw. Measure the valve clearance.

Standard value: 0.20 ± 0.03 mm

26.If the valve clearance is not within the standard value, loosen the lock nut. Adjust the adjusting screw so that the valve clearance can be within the standard value.

27.After the adjustment, hold the driver to prevent the adjustment screw from rotating. Tighten the lock nut to the specified torque.

Tightening torque: 9.0 ± 1.0 N·m

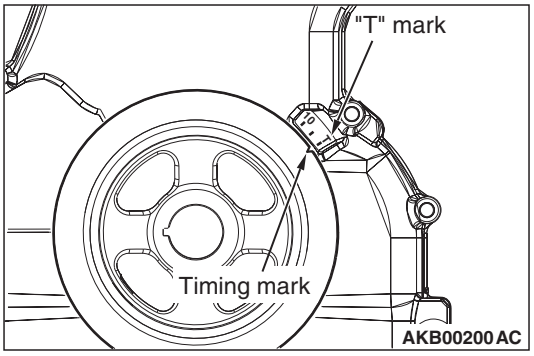

28.Rotate the crankshaft clockwise once. Align the crankshaft pulley timing mark (notch) with the "T" mark of the timing chain case. Therefore, the No. 4 cylinder is set at the top dead centre on its compression stroke.

29.For the No. 3 cylinder inlet valve, check and adjust the valve clearance according to the procedures from Step 9 to Step 22.

30.For the No. 4 cylinder inlet valve, check and adjust the valve clearance according to the procedures from Step 9 to Step 22.

31.For the No. 2 and No. 4 cylinder exhaust valves, check and adjust the valve clearance according to the procedures from Step 25 to Step 27.

32.Remove the special tool and return the engine harness to the original state.

33.Install the rocker cover assembly.

<4N1>

NOTE: The valve clearance check and adjustment should be done when the engine is cold.

1. Remove the fuel injector and common rail assembly and also the rocker cover assembly.

⚠ CAUTION

The crankshaft should always be turned in a clockwise direction.

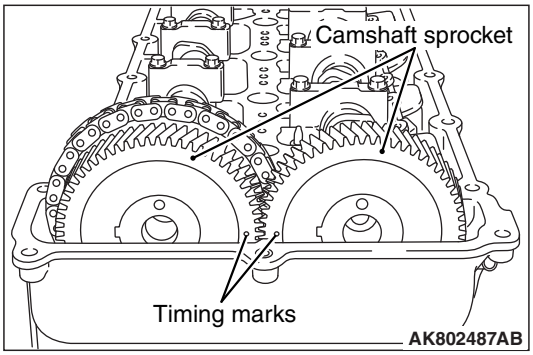

2. Align the camshaft sprocket timing marks and set the No. 1 cylinder at compression stroke top dead centre.

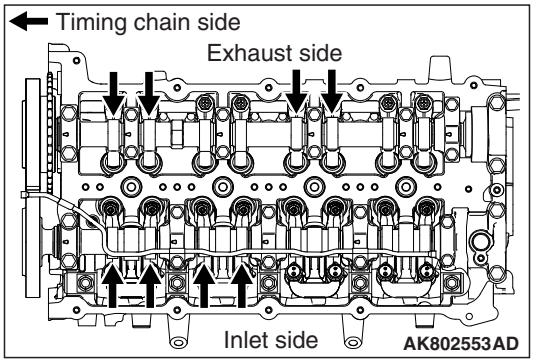

3. For the portions with the arrows shown below, measure and adjust the valve clearances by using the following procedures.

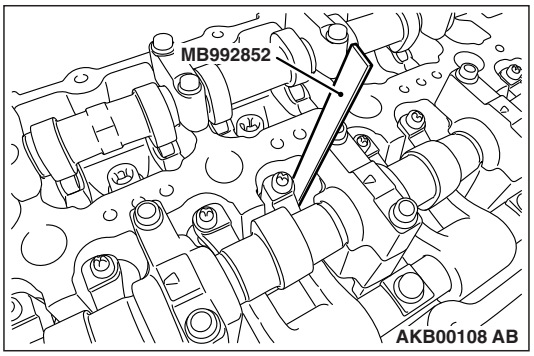

< Inlet side >

1.) By using the special tool MB992852 (valve adjusting feeling gauge), check that the clearance is within the standard value between the valve stem and adjusting screw.

Standard value (cold engine): 0.14 ± 0.03 mm

2.)If the valve clearance is not as specified, loosen the adjusting screw lock nut and adjust the clearance using the special tool MB992852 (valve adjusting feeling gauge) between the valve stem and the adjusting screw while turning the adjusting screw.

⚠ CAUTION

Pay special attention that the tightening torque is not beyond this valve. If the tightening torque is beyond the valve, the valve stem would possibly bend.

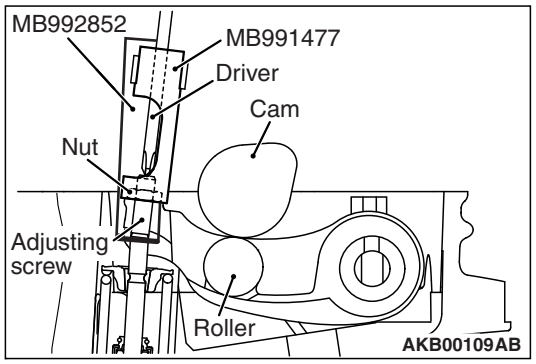

3.)While holding the adjusting screw with a screwdriver to prevent it from turning, tighten the lock nut to the specified torque using the special tool MB991477 (valve adjusting socket).

Tightening torque: 9 ± 1 N·m

< Exhaust side >

1.) By using the thickness gauge, measure the clearance between the cam and roller.

Standard value (cold engine): 0.16 ± 0.03 mm

2.) By using the thickness gauge, measure the clearance between the cam and roller.

⚠ CAUTION

Pay special attention that the tightening torque is not beyond this valve. If the tightening torque is beyond the valve, the valve stem would possibly bend.

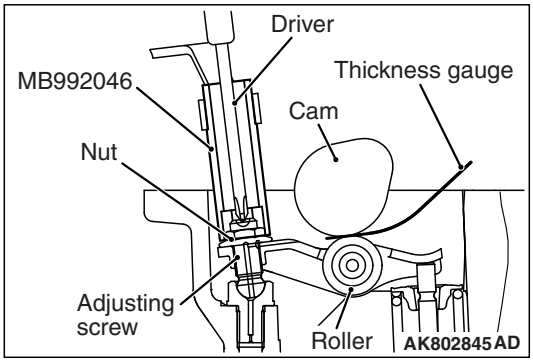

3.)While holding the adjusting screw with a screwdriver to prevent it from turning, tighten the lock nut to the specified torque using the special tool MB992046 (valve adjusting socket), valve adjusting socket.

Tightening torque: 9.8 ± 1 N·m

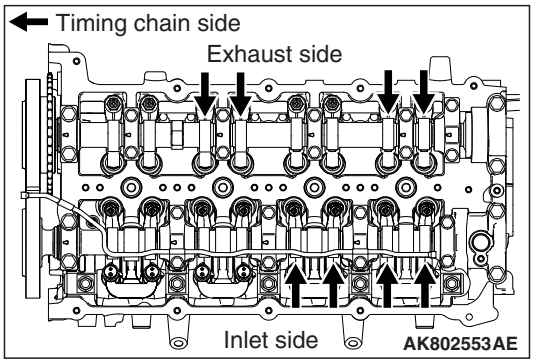

4. Turn the crankshaft 360° clockwise to bring No. 4 cylinder to the top dead centre position.
5. For the portions with the arrows shown below, measure and adjust the valve clearances by using the same procedures as ones in the Step 3.
6. Install the rocker cover assembly and also the fuel injector and common rail assembly.
7. Confirm there is no fuel leak from the joint for the injection pipe.

A6. CHECK RADIATOR HOSES FOR DAMAGE AND PROPER CONNECTION

M6020200901333

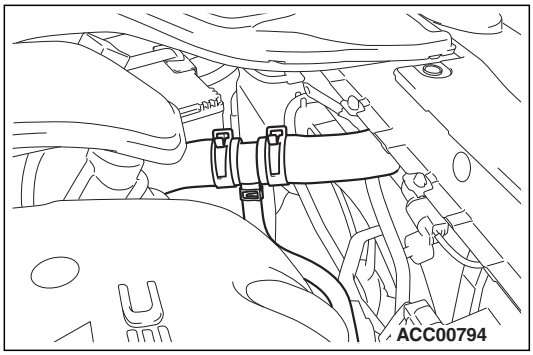

1. Check entire circumference and length of hoses, using a mirror as required.
2. Check that hoses installed in grommets pass through the centre of the grommets.
3. Check all clamps for tightness and connections for leakage.

A7. CHECK ENGINE COOLANT LEVEL IN RESERVOIR

M6020201001270

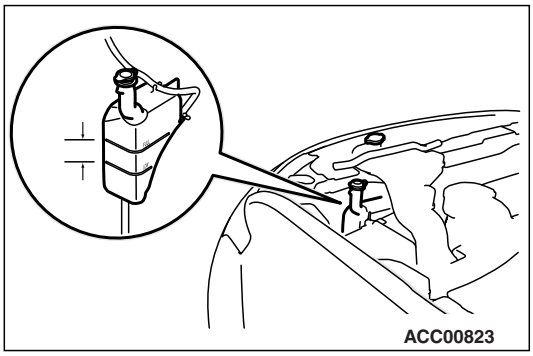

Check that the coolant level is between the "FULL" and "LOW" lines when the engine is at the normal operating temperature.

A8. ENGINE COOLANT CHANGE

M6020201102009

<4B1 and 4J1>

⚠ CAUTION

Note that the following service procedures are not applicable for vehicles with electric heater (option for 4B1-PHEV).

⚠ WARNING

When removing the radiator cap, use care to avoid contact with hot engine coolant or steam. Place a shop towel over the radiator cap and turn the radiator cap anti-clockwise a little to let the pressure escape through the vinyl tube. After relieving the steam pressure, remove the radiator cap by slowly turning it anti-clockwise.

<4B1-Except PHEV, 4B1-PHEV (Vehicles without electric heater)>

1. Remove the engine room under cover front.
2. Drain the water from the radiator, heater core and engine after unplugging the radiator drain plug and removing the radiator cap.

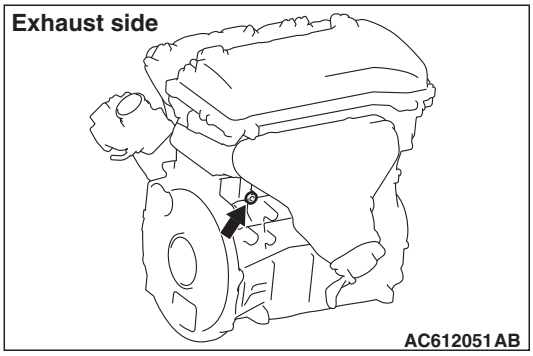

3. Drain the water in the water jacket by unplugging the drain plug of the cylinder block.
4. Remove the radiator condenser tank and drain the coolant.

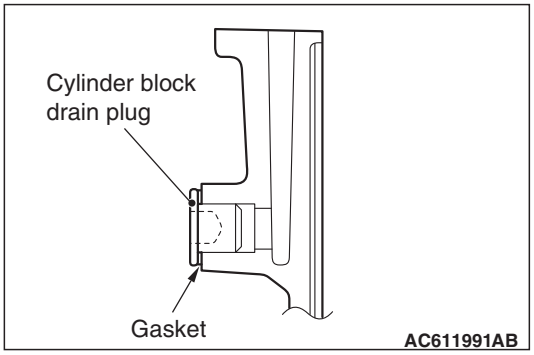

5. Replace the cylinder block drain plug gasket, and tighten the drain plug to the specified torque.

   Tightening torque: 39 ± 3 N·m

6. Securely tighten the radiator drain plug.
7. Reinstall the radiator condenser tank.

⚠ CAUTION

Do not use alcohol or methanol anti-freeze or any engine coolants mixed with alcohol or methanol anti-freeze. The use of an improper anti-freeze can cause corrosion of the aluminium components.

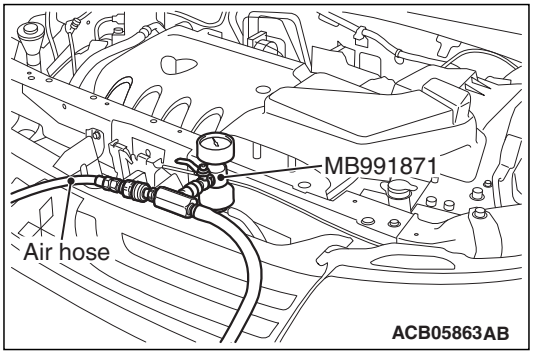

8. Use special tool LLC changer (MB991871) to refill the engine coolant up to the top of the radiator port.

   Recommended antifreeze: MITSUBISHI MOTORS GENUINE SUPER LONG LIFE COOLANT PREMIUM or equivalent*

   NOTE: *similar high quality ethylene glycol based non-silicate, non-amine, non-nitrate and non-borate coolant with long life hybrid organic acid technology.

   Quantity: Approximately 6.0 L <4B1-Except PHEV, 4J1> or 6.5L <4B1- PHEV(Vehicles without electric heater)>

   NOTE: For how to use special tool (MB991871), refer to its manufacturer's instructions.

9. Tighten the radiator cap securely.
10. Remove the radiator condenser tank cap, and add the engine coolant up to the "FULL" line.
11. Turn the A/C switch to OFF position to start the engine and warm up until the cooling fan operates.

    NOTE: This work is to open the thermostat fully.

12. Rev the engine several times and then stop it. Check that there are no coolant leaks.
13. Remove the radiator cap with the engine cool, and then refill the engine coolant up to the top of the radiator port.
14. Tighten the radiator cap securely.

⚠ CAUTION

Do not overfill the radiator condenser tank.

15. Remove the radiator condenser tank cap, and add the engine coolant up to the "FULL" line.
16. Install the engine room under cover front.

<4B1-PHEV (Vehicles with electric heater)>

1. Remove the engine room under cover front

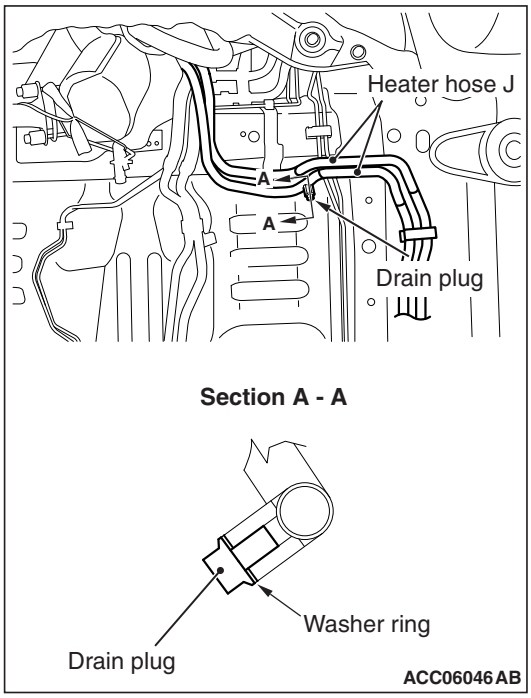

2. Remove the electric heater drain plug and the radiator cap in that order. Then drain the engine coolant from the radiator, the heater core and the electric heater.

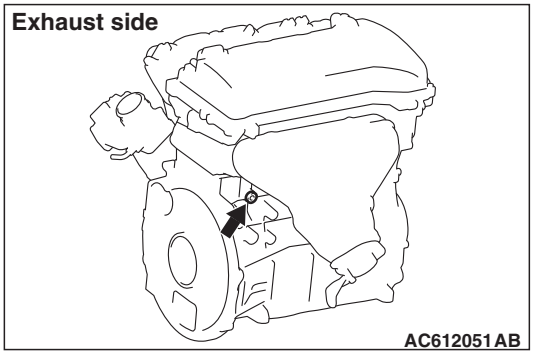

3. Drain the water in the water jacket by unplugging the drain plug of the cylinder block.
4. Remove the radiator condenser tank and drain the coolant.

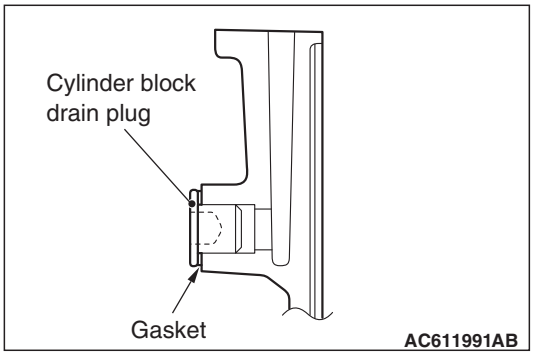

5. Replace the cylinder block drain plug gasket, and tighten the drain plug to the specified torque.

   Tightening torque: 39 ± 3 N·m

6. Securely tighten the radiator drain plug.
7. Reinstall the radiator condenser tank.

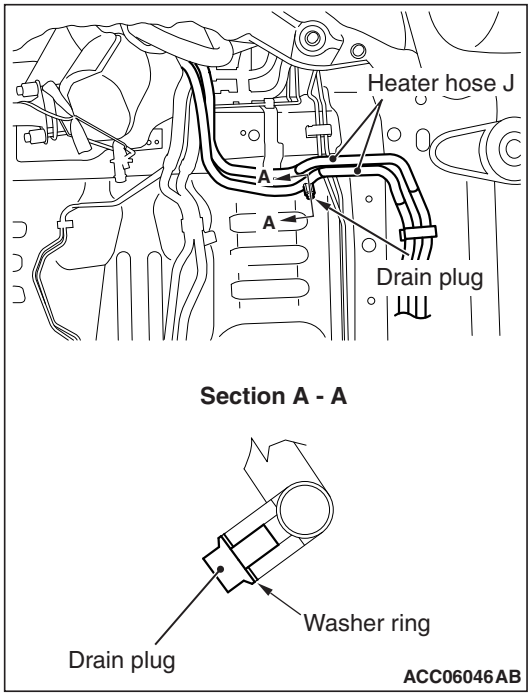

8. Tighten the electric heater drain plug.

   NOTE: A new washer ring must be used.

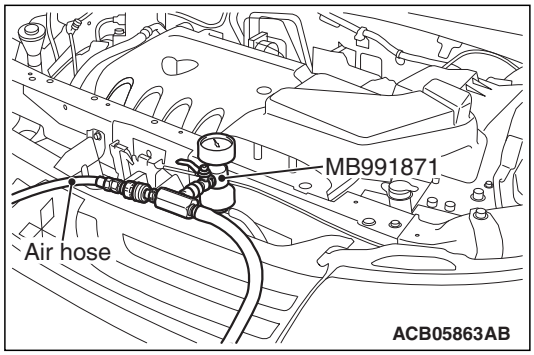

9. Use special tool LLC changer (MB991871) to refill the engine coolant up to the top of the radiator port.

   Recommended antifreeze: MITSUBISHI MOTORS GENUINE SUPER LONG LIFE COOLANT PREMIUM or equivalent*

   NOTE: *similar high quality ethylene glycol based non-silicate, non-amine, non-nitrate and non-borate coolant with long life hybrid organic acid technology.

   Quantity: Approximately 7.5 L

10. Remove the bolt from the ventilation hole on heater pipe A. Then air-bleed the system.
11. Tighten the bolt into the ventilation hole.
12. Remove the radiator condenser tank cap, and add the engine coolant up to the "FULL" line.
13. Tighten the radiator condenser cap securely.
14. Turn off the air-conditioner switch, and then warm the engine until the cooling fan runs.

    NOTE: This work is to open the thermostat fully.

15. Rev the engine several times and then stop it. Check that there are no coolant leaks.
16. Remove the radiator cap with the engine cool, and then refill the engine coolant up to the top of the radiator port.
17. Tighten the radiator cap securely.
18. Remove the radiator condenser tank cap, and add the engine coolant up to the "FULL" line.
19. Tighten the radiator condenser cap securely.
20. Install the engine room under cover front.

<4N1>

1. Remove the engine room under cover front.

⚠ *WARNING*

When removing the radiator cap, use care to avoid contact with hot engine coolant or steam. Place a shop towel over the radiator cap and turn the radiator cap anti-clockwise a little to let the pressure escape through the vinyl tube. After relieving the steam pressure, remove the radiator cap by slowly turning it anti-clockwise.

2. Drain the engine coolant from the radiator, heater core and engine after unplugging the radiator drain plug and removing the radiator cap.
3. Remove the catalytic converter assembly.

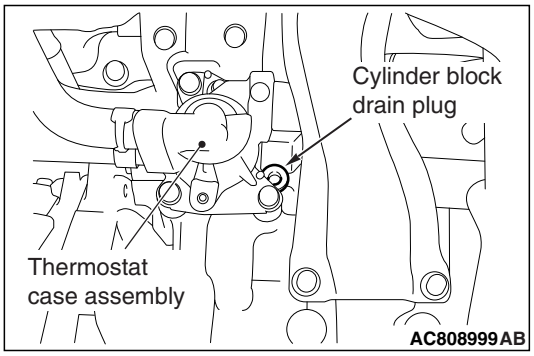

4. Drain the engine coolant in the water jacket by unplugging the cylinder block drain plug.
5. Remove the radiator condenser tank and drain the engine coolant.
6. Reinstall the radiator condenser tank.
7. Replace the gasket, and tighten the cylinder block drain plug to the specified torque.

   Tightening torque: 39 ± 3 N·m

8. Install the catalytic converter assembly.
9. Securely tighten the radiator drain plug.

⚠ CAUTION

Do not use alcohol or methanol anti-freeze or any engine coolants mixed with alcohol or methanol anti-freeze. The use of an improper anti-freeze can cause corrosion of the aluminium components.

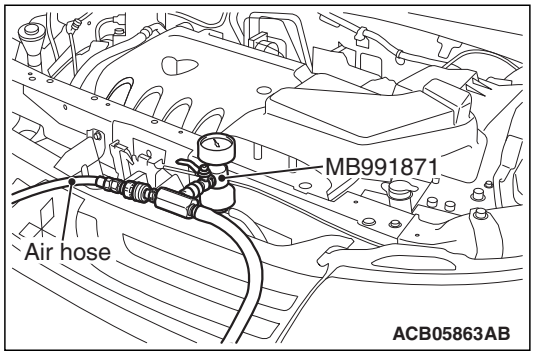

10. Use special tool LLC changer (MB991871) to refill the engine coolant up to the top of the radiator port.

    Recommended antifreeze: MITSUBISHI MOTORS GENUINE SUPER LONG LIFE COOLANT PREMIUM or equivalent*

    NOTE: *similar high quality ethylene glycol based non-silicate, non-amine, non-nitrate and non-borate coolant with long life hybrid organic acid technology.

    Quantity: 7.5 L <M/T> or 8.0L <A/T> (includes 0.65 L in the radiator condenser tank)

    NOTE: For how to use special tool MB991871, refer to its manufacturer's instructions.

11. Tighten the radiator cap securely.
12. Turn the A/C switch to OFF position to start the engine and warm up until the radiator fan operates.

    NOTE: This work is to open the thermostat fully.

13. Rev the engine several times and then stop it. Check that there are no engine coolant leaks.

⚠ CAUTION

Do not overfill the radiator condenser tank.

14. Remove the radiator condenser tank cap with the engine cool, and then refill the engine coolant again to the "FULL" line of the radiator condenser tank.
15. Reinstall the engine room under cover front.

A9. CHECK AIR CLEANER ELEMENT FOR CLOGGING AND DAMAGE

M6020201201025

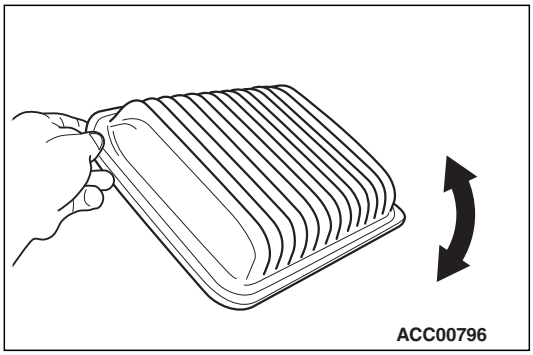

1. Check air cleaner element for clogging and damage.
2. Clean deposited dust from the element in the following manner.
   (1) Lightly tap the element against the top of a bench.
   (2) Blow compressed air from inside the element.
3. Wipe off dust on the air cleaner interior.
4. Install the air cleaner body.

A10. REPLACE AIR CLEANER ELEMENT

M6020201301185

The air cleaner element will become dirty and loaded with dust during use, and the filtering effect will be substantially reduced. Replace it with a new one.

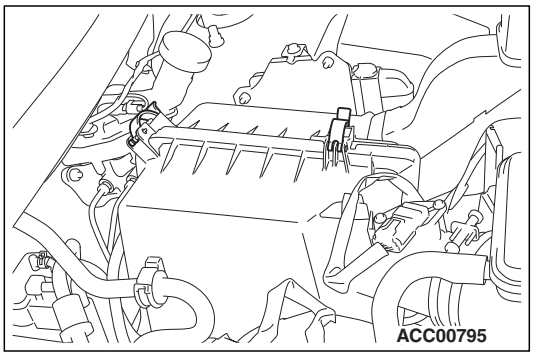

1. Unclasp the air cleaner cover clip.
2. Remove the air cleaner element and install a new one.
3. Be sure to close the air cleaner cover completely when clamping it.

A11. CHECK FLUID LEVEL IN BRAKE RESERVOIR AND CLUTCH RESERVOIR

M6020203000518

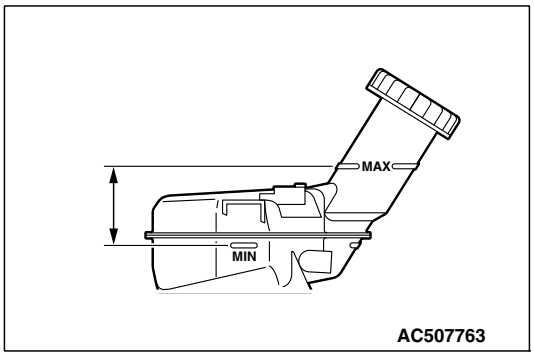

1. Check that the fluid level is between the "MAX" and "MIN" mark.
2. If it is below the "MIN" marks, replenish with fresh brake fluid up to the "MAX" mark.

A12. CHANGE BRAKE FLUID

M6020201601335

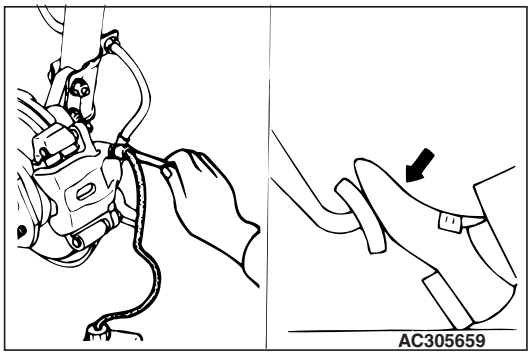

1. Remove the cap of the bleeder screw, connect a vinyl tube, and place its other end in a receptacle.

⚠ CAUTION

If the reservoir tank completely runs out of fluid during operation, air will find way into the brake line. Pay attention, therefore, to the fluid level and replenish as necessary.

2. Loosen the bleeder screw and depress the brake pedal; supply new brake fluid when the level of the fluid within the reservoir tank decreases.

   Specified brake fluid: DOT3 or DOT4

⚠ CAUTION

Use the specified brake fluid. Avoid using a mixture of the specified brake fluid and other fluid. If brake fluid is exposed to the air, it will absorb moisture; as water is absorbed from the atmosphere, the boiling point of the brake fluid will decrease and the braking performance will be seriously impaired. For this reason use a hermetically sealed 1 L or 0.5 L brake fluid container. Firmly close the cap of the brake fluid container after use.

3. When fresh fluid has come to flow out from the vinyl tube, tighten the bleeder screw.

   NOTE: This change from existing to fresh fluid can be judged by change in colour of fluid that flows out.

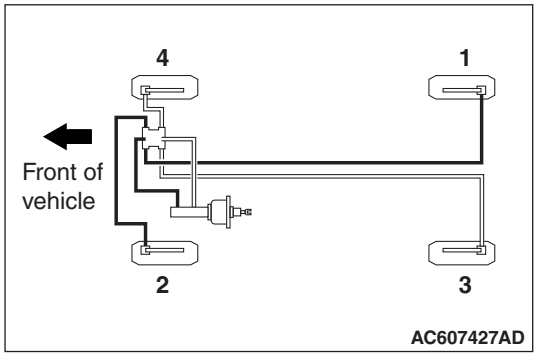

4. Repeat above steps for other bleeder screws.

MASTER CYLINDER BLEEDING

When removed the master cylinder assembly, bleed the master cylinder in the following procedure to make bleeding of the brake pipeline easier (When no brake fluid is in the master cylinder).

1. Fill the brake fluid reservoir with the brake fluid.
2. Depress and hold the brake pedal.

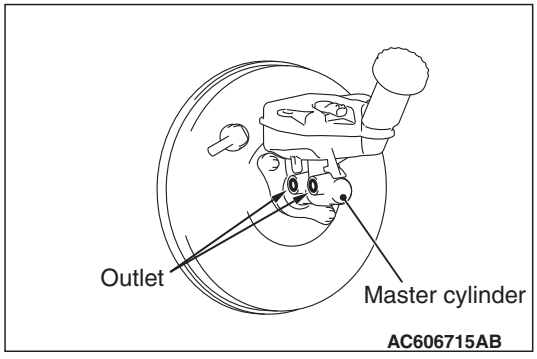

3. Another operator closes the master cylinder outlets with his fingers.
4. In this condition, release the brake pedal.
5. Repeat Steps 2 to 4 for 3 or 4 times to fill the master cylinder with the brake fluid.

A13. CHECK BATTERY CONDITION

M6020203100548

⚠ CAUTION

- **If the battery is used with the electrolyte level below the LOWER LEVEL indicator, there is the danger that explosions may occur, so add water to the battery until the electrolyte level is between the LOWER LEVEL and UPPER LEVEL indications.**
- **If too much water is added to make the level rise above the UPPER LEVEL indication, the electrolyte may leak out, so adjust so that the electrolyte level is between the LOWER LEVEL and UPPER LEVEL indications.**

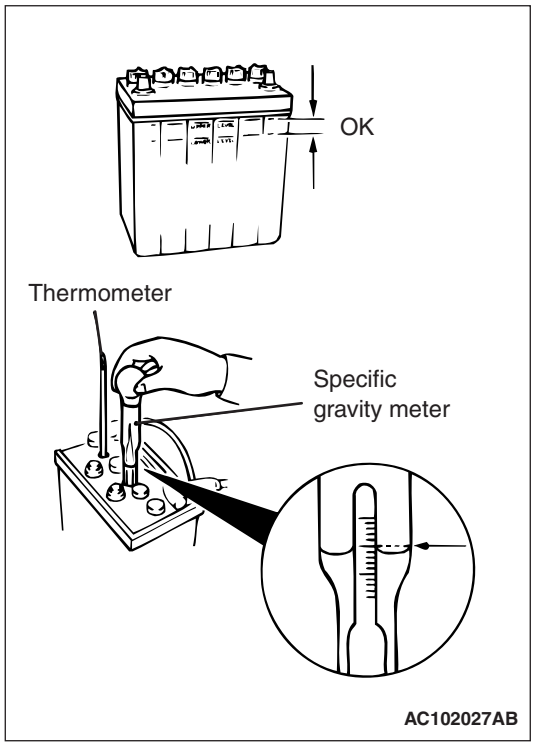

1. Check that the battery electrolyte level is between the UPPER LEVEL and LOWER LEVEL indications.
2. Use a specific gravity meter and a thermometer to measure the specific gravity.

   Standard value: 1.220 – 1.290 (electrolyte temperature 20°C)

The specific gravity of the battery electrolyte changes according to the temperature, so the specific gravity when the electrolyte is at a temperature of 20°C can be calculated using the following formula. Use the converted value to judge whether the electrolyte is okay or not.

D_{20} = (t − 20) × 0.0007 + Dt

D_{20}: Specific gravity converted to a value for electrolyte temperature of 20°C

t: Electrolyte temperature at the time of measurement

Dt: Actual specific gravity

A14. REPLACE FUEL FILTER

M6020201901422

<Petrol-powered vehicles>

1. Fuel line pressure reduction.

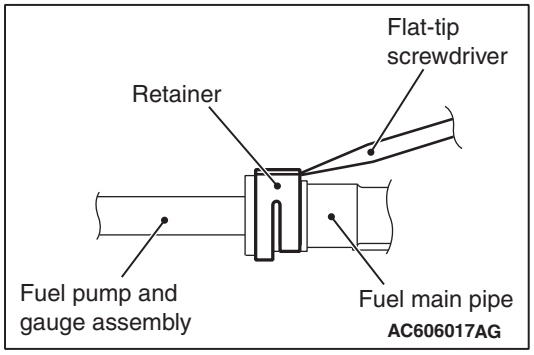

2. Insert a flat-tip screwdriver (6 mm wide and 1 mm thick) into the retainer of the fuel main pipe connector.

⚠ CAUTION

When pushing up the retainer of the fuel main pipe connector, pay attention to avoid damage to the retainer.

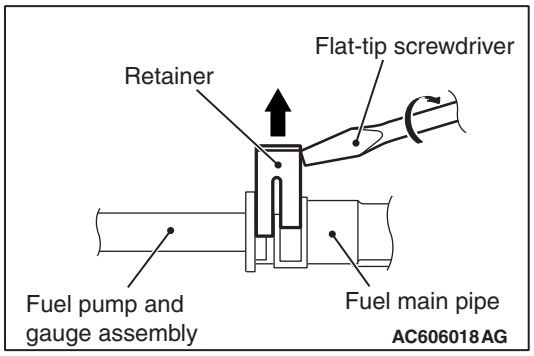

3. Turn the flat-tip screwdriver inserted into the retainer by 90 degrees to push up the retainer and unlock the fuel main pipe connector.

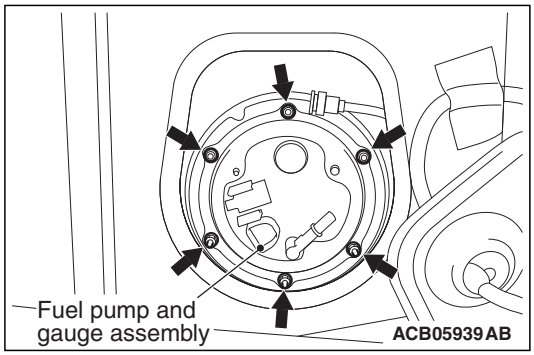

4. Remove the mounting nuts of fuel pump and gauge assembly.
5. Remove the fuel tank bracket and connector housing assembly and the fuel pump bracket plate.

⚠ CAUTION

Pay attention not to damage the gauge unit and the float of fuel pump and gauge assembly when withdrawing it from the service hole.

6. Remove the fuel pump and gauge assembly from the fuel tank. <2WD>

   NOTE: For disassembly and reassembly of the fuel pump and gauge assembly, refer to "Disassembly and reassembly of fuel pump and gauge assembly on the Workshop Manual.

⚠ CAUTION

Pay attention not to damage the gauge unit and the float of fuel pump and gauge assembly when withdrawing it from the service hole.

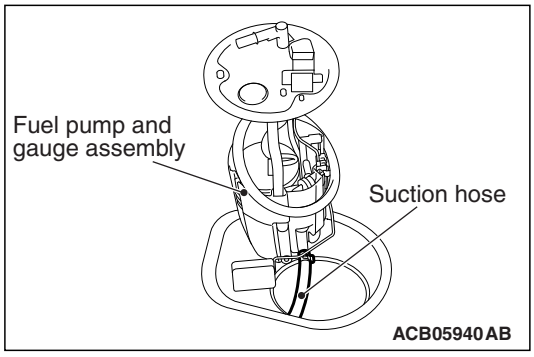

7. While withdrawing the fuel pump and gauge assembly from the service hole, disconnect the suction hose from the fuel pump and gauge assembly to remove the fuel pump and gauge assembly from the fuel tank. <4WD>

   NOTE: For disassembly and reassembly of the fuel pump and gauge assembly, refer to "Disassembly and reassembly of fuel pump and gauge assembly" on the Workshop Manual.

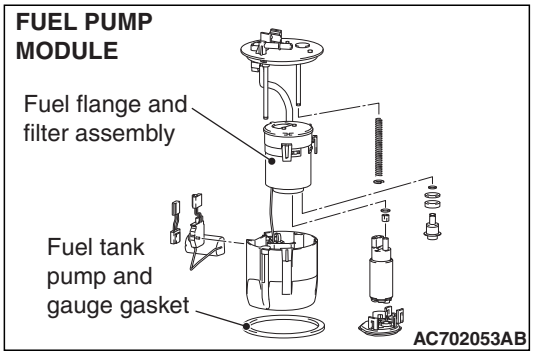

8. Replace the fuel flange and filter assembly and fuel tank pump and gauge gasket with a new one.

⚠ CAUTION
- **Pay attention not to damage the gauge unit and the float of fuel pump and gauge assembly when installing it to the fuel tank from the service hole.**
- **When installing the fuel pump and gauge assembly to the fuel tank, check that the gauge moving area moves smoothly.**

9. Install the fuel pump and gauge assembly to the fuel tank through the service hole. <2WD>

⚠ CAUTION
- **Pay attention not to damage the gauge unit and the float of fuel pump and gauge assembly when installing it to the fuel tank from the service hole.**
- **Pay attention to prevent the float of fuel pump and gauge assembly from being trapped by the suction hose inside the fuel tank.**
- **When installing the fuel pump and gauge assembly to the fuel tank, check that the gauge moving area moves smoothly.**

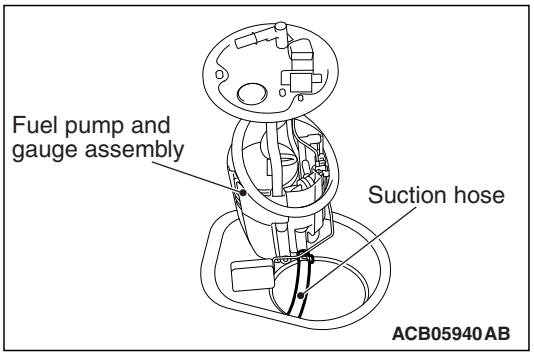

10. While inserting the fuel pump and gauge assembly into the fuel tank from the service hole, connect the suction hose to the fuel pump and gauge assembly to install the fuel pump and gauge assembly to the fuel tank. <4WD>
11. Install the fuel pump bracket plate and the fuel tank bracket and connector housing assembly.

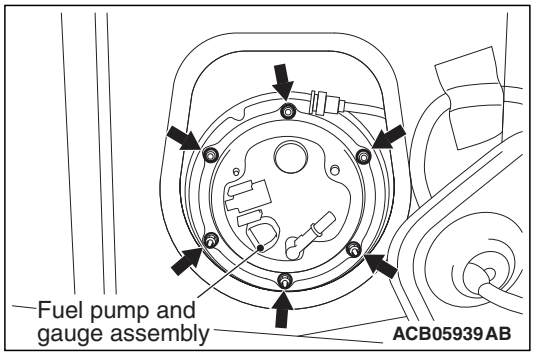

12. Tighten the fuel pump and gauge assembly mounting nuts to the specified torque.

Tightening torque: 2.5 ± 0.4 N·m

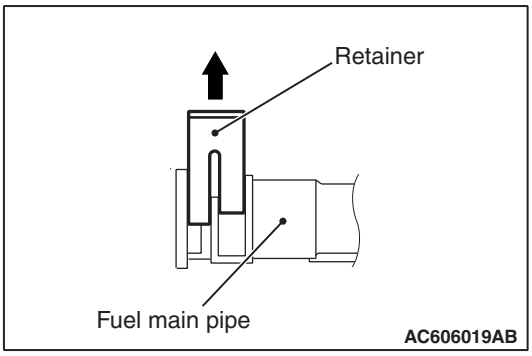

13. Pull up the retainer of fuel main pipe to unlock before installing.

⚠ CAUTION
- **When pushing in the retainer of the fuel main pipe connector, pay attention to avoid damage to the retainer.**
- **After the installation of the fuel main pipe, slightly pull the fuel main pipe to check that it is connected securely. At this time, also check that there is approximately 1 mm play.**

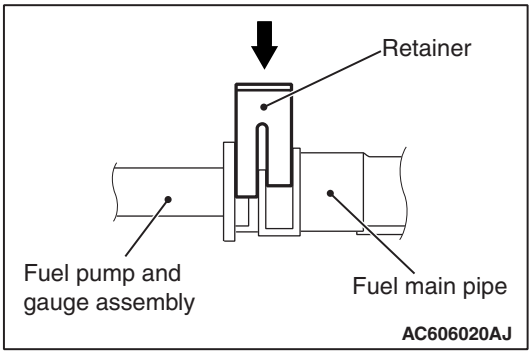

14. Install the fuel main pipe to the fuel pump and gauge assembly securely and push in the retainer of the fuel main pipe connector to lock the fuel main pipe and fuel pump and gauge assembly.

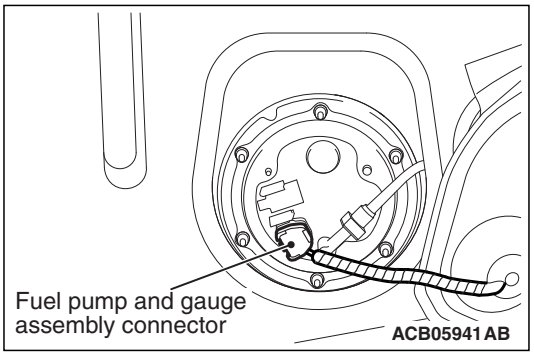

15.Connect the fuel pump and gauge assembly connector.

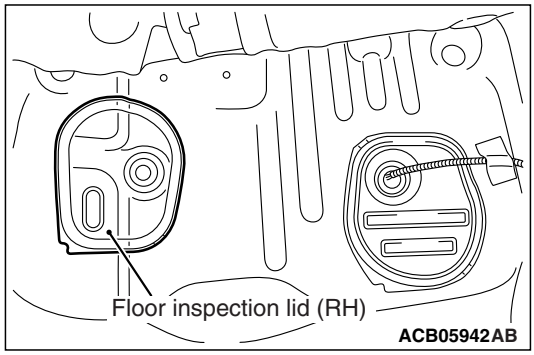

16.Install the floor inspection lid (LH).

17.Return the floor carpet to the original condition and install the second seat assembly.

<Diesel-powered vehicles>

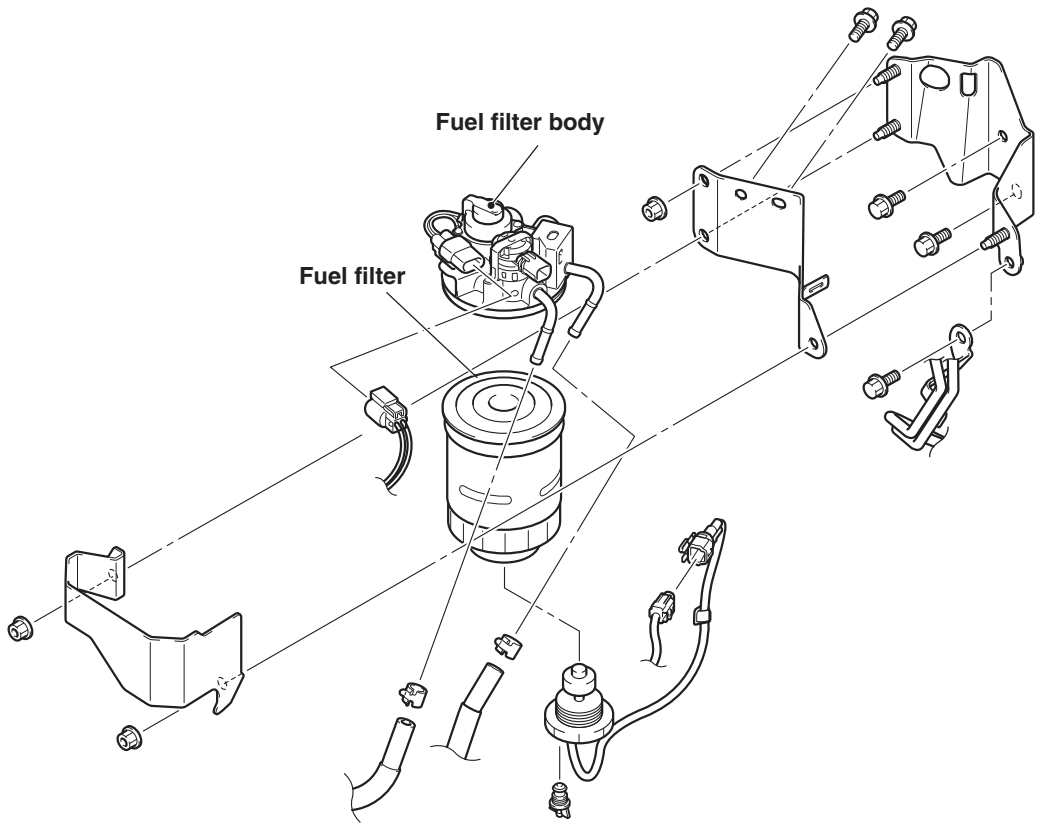

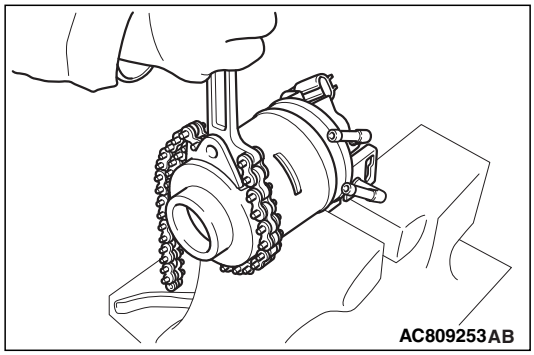

1. Fix the fuel filter body to a vice, and then remove the fuel filter using an oil filter wrench.
2. Clean the mounting surface on the fuel filter body side.
3. Tighten the fuel filter to the specified torque from the point where the gasket contacts the mounting surface.

   Tightening torque: Approximately 3/4 turn (17 ± 2 N·m)

A15.CHECK HIGH VOLTAGE CABLE FOR DAMAGE AND PROPER CONNECTION

M6020239500042

HIGH-VOLTAGE COMPONENTS

The high-voltage components are described below. Also, wiring harness and connectors of high-voltage circuit are unified with a colour of orange.

- Main battery
- Front motor control unit [FPDU (Front Power Drive Unit)] (incorporating GCU [Generator Control Unit])
- Rear motor control unit [RMCU (Rear Motor Control Unit)]
- Motor (electric motor unit) <front and rear>
- Generator
- On-board charger/DC-DC converter
- Electric heater <Vehicles with electric heater>
- Main battery cable
- EV charger cable (regular charging)
- EV charger cable <Vehicles compatible with quick charging>
- Service plug
- Wiring harness and connector

SERVICE PRECAUTIONS

⚠ DANGER

When adjusting the high-voltage components, be sure to disconnect the service plug in order to shut off the high voltage.

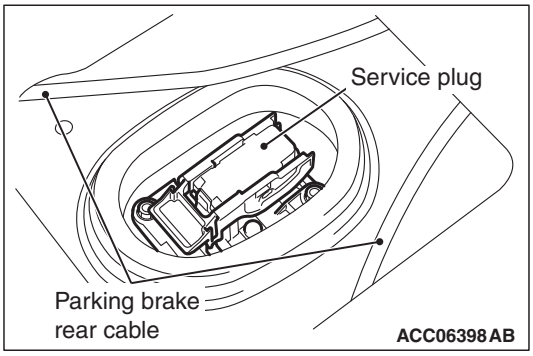

Remove the service plug under the rear centre seat according to the following procedure, which shuts off the high voltage to the high-voltage system.

Service plug and service lid removal steps

1. Turn off the power supply mode of the electric motor switch.

⚠ WARNING

- ***To avoid causing any trouble to the electric motor unit components, do not disconnect the auxiliary battery negative terminal for two minutes after turning off the power supply mode of the electric motor switch.***
- ***The voltage of the smooth condenser in the inverter must be decreased thoroughly. Therefore, do not remove the service plug for 5 minutes after the negative terminal of the auxiliary battery is disconnected.***

2. Disconnect the negative terminal of the auxiliary battery.

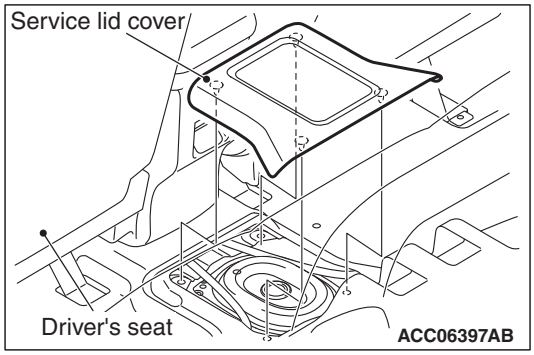

3. Remove the service lid cover.

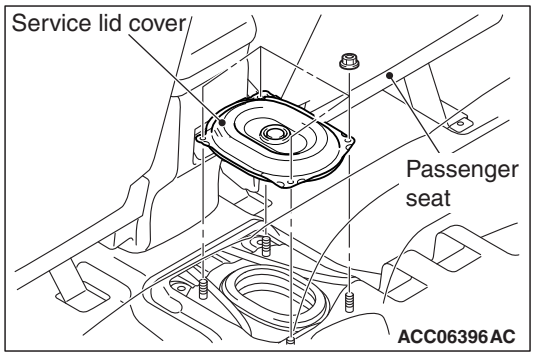

4. Remove the service lid mounting nut, and then remove the service lid.

⚠ DANGER

- ***Wear the electric insulation gloves when pulling out the service plug.***
- ***Do not lift the lever of service plug by halve. It is dangerous because the current is supplied during the lifting operation. Be sure to remove the service plugs all at once.***

⚠ WARNING

The voltage of the smooth condenser in the inverter must be decreased thoroughly. Therefore, do not remove the service plug for 5 minutes after the negative terminal of the auxiliary battery is disconnected.

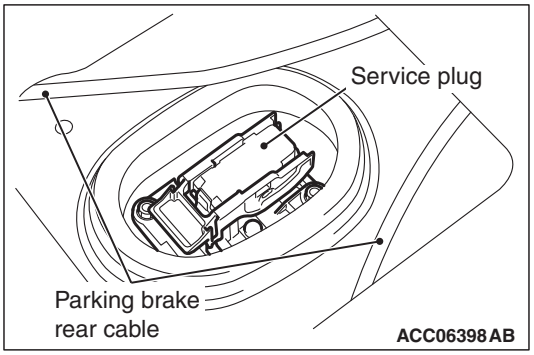

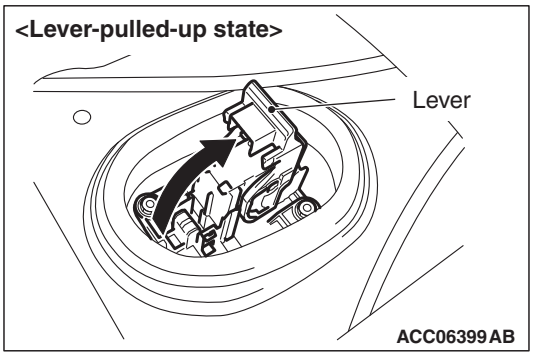

5. Lift the service plug lever.

⚠ DANGER

After removing the service plug, insulate the plug installed part of the drive battery securely.

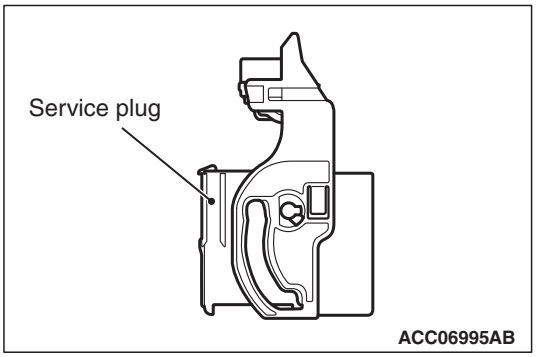

6. Remove the service plug.

HIGH VOLTAGE CABLE CHECK

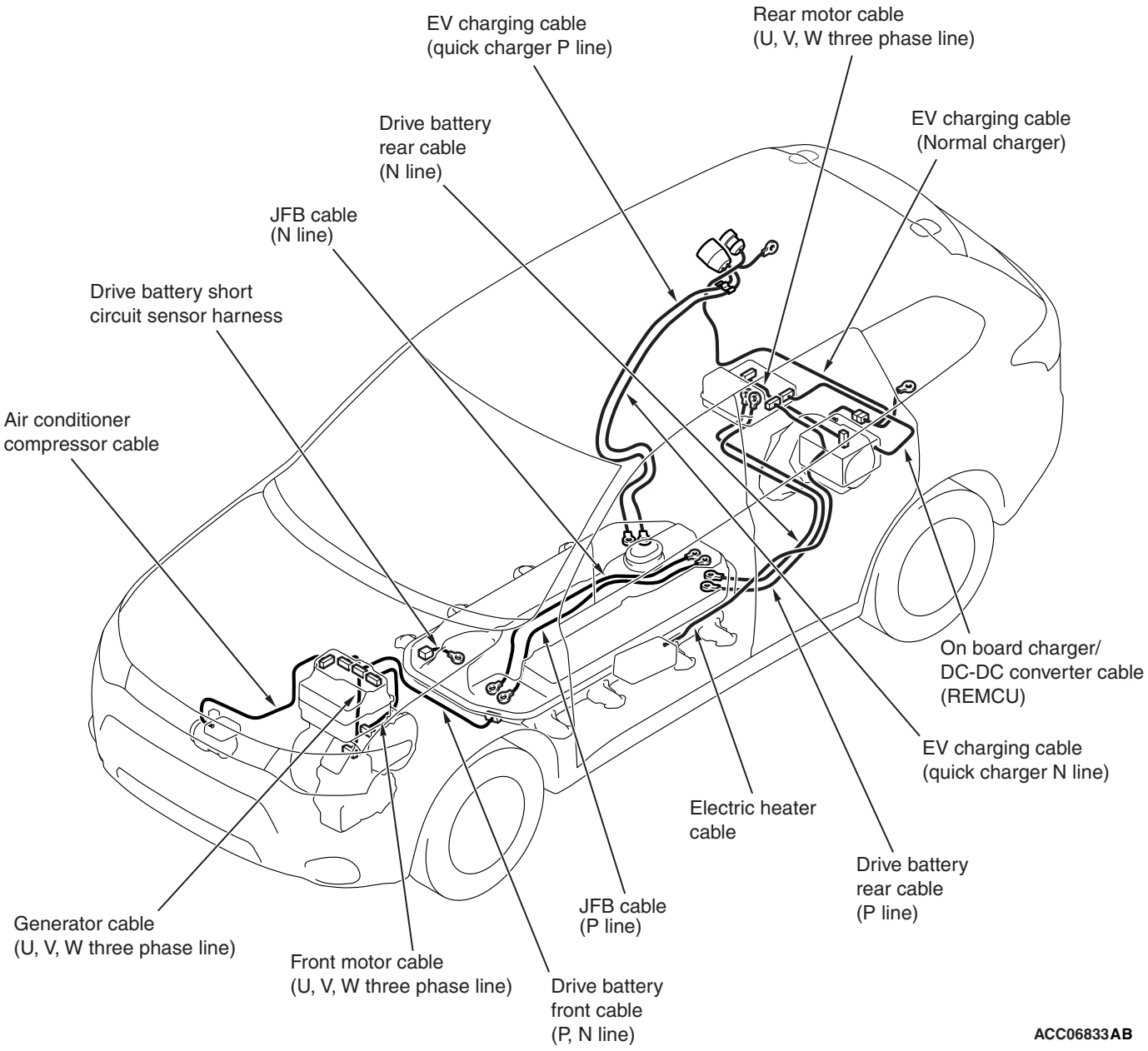

Check the high voltage cable for the following items:

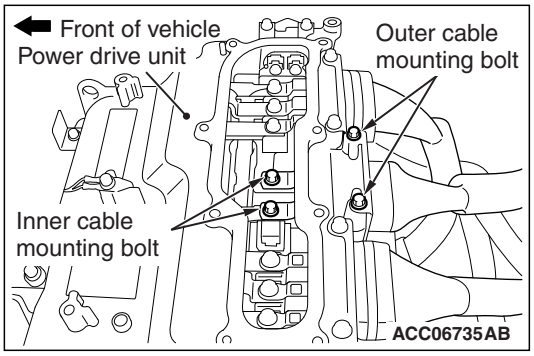

- Check the connections for looseness by wiggling connectors or checking tightening torque of threaded fasteners.
- Visually check electrical wires for damage and wire clamps for looseness.
- Check that electrical wires do not interfere with surrounding components.

A16. CHECK FRONT MOTOR FOR COOLING OIL LEAKAGE

M6020209500049

1. Visually check the front motor, the generator and the electric oil pump for oil leaks.
2. If any oil leak is found, drain the oil.
3. Repair or replace the component where the oil leak is found.
4. Refill the oil, and then check that no oil leaks are found around the relevant component.

A17. CECHK REAR MOTOR COOLANT LEVEL IN RESERVOIR

M6020209600046

⚠ CAUTION

Do not operate the electric water pump when the coolant level in the radiator condenser tank is lower than the "LOW" line. If the electric water pump is operated, the electric water pump bearing may sustain damage, resulting in a electric water pump breakdown or service life reduction.

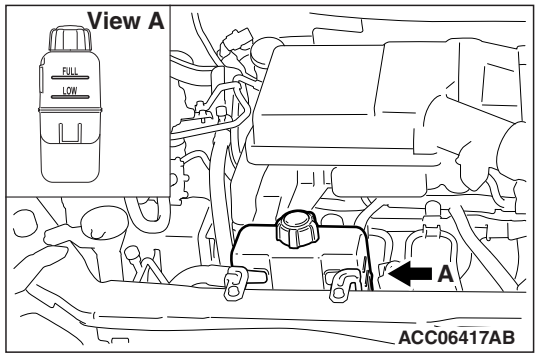

1. Check that the coolant level in the EV radiator condenser tank is in the range between the "FULL" line and "LOW" line.
2. Check that the coolant is not contaminated with oil and others.

   NOTE: The EV radiator condenser tank may contain sediment or the motor coolant may be discoloured. These are normal.

A18. CHANGE REAR MOTOR COOLANT

M6020209700043

⚠ CAUTION

Do not operate the electric water pump when the coolant level in the radiator condenser tank is lower than the "LOW" line. If the electric water pump is operated, the electric water pump bearing may sustain damage, resulting in a electric water pump breakdown or service life reduction.

MOTOR COOLANT DRAINING

⚠ WARNING

Be very careful because the coolant may be very hot.

1. Remove the EV radiator condenser tank cap.

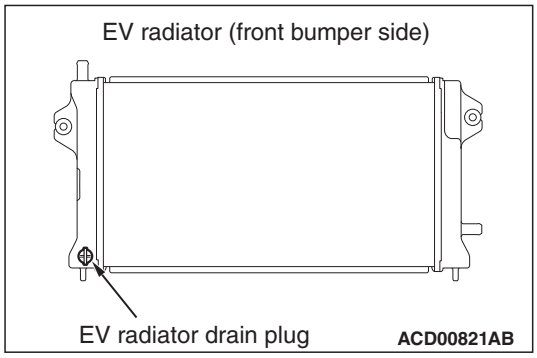

2. Remove the EV radiator drain plug, and drain the motor coolant.
3. Tighten the EV radiator drain plug to the specified torque.

   Tightening torque: 2.0 N·m

MOTOR COOLANT REFILLING

⚠ CAUTION

Use the Mitsubishi genuine Mitsubishi Motors Genuine Super Long Life Coolant Premium without adding water because the concentration is preadjusted to 50%.

1. Prepare the required volume of coolant using a jug so as to avoid running out of motor coolant during the refilling and causing any damage to the electric water pump.

   Recommended antifreeze: MITSUBISHI MOTORS GENUINE SUPER LONG LIFE COOLANT PREMIUM
   Quantity: 6.5 L
2. Remove the EV radiator condenser tank cap.
3. Fill the motor coolant up to the radiator condenser tank filler port.
4. According to either of the procedures below, start the "Coolant refilling control".
   (1) Not using M.U.T.-III
      a. Pull the parking brake lever.
      b. Turn the power supply mode of the electric motor switch to ON.
      c. Press the ECO mode switch 10 times or more within seven seconds.
   (2) When using M.U.T.-III

⚠ CAUTION

While the M.U.T.-III is communicating with the vehicle, the electric motor switch may not be turned off and no normally. Therefore, when you turn off the electric motor switch for that communication, wait for several seconds and then turn on it again (do not turn on it immediately).

      a. Turn off the power supply mode of the electric motor switch. Then connect the M.U.T.-III to the diagnosis connector.
      b. Turn the power supply mode of the electric motor switch to ON.
      c. From the system selection screen of M.U.T.-III, select "PHEV-ECU".
      d. From the PHEV-ECU screen, select "Special Function-test".
      e. Select the item No. 2 "Water pump actuate".
5. There will be a wait time of 20 seconds after the start of "Coolant refilling control" until the actuation of electric water pump. During this period, hold the prepared jug, and insert the jug tip into the EV radiator condenser tank filler port to be ready to fill the motor coolant.
6. Wait for 20 seconds. As the motor coolant level drops due to the intermittent operation of the electric water pump, refill the motor coolant up the radiator condenser tank filler port.

   NOTE:
   - *In a case if the prepared coolant becomes about to run out, turn off the power supply mode of the electric motor switch beforehand, and stop the "Coolant refilling control" (at this time, perform the work with two people).*
   - *Including the wait time, "Coolant refilling control" will be completed within ten minutes from the start (during this period, 31 times of 4-second operation are included).*
     If the motor coolant change is not completed, or if the control is stopped during the work, the refilling can be resumed by starting "Coolant refilling control" once again.
   - *The water pump cycles on and off follows:*

   Not using the M.U.T.-III: ON for four seconds and OFF for 15 seconds
   Using the M.U.T.-III: ON for four seconds and OFF for 30 seconds

7. Until the motor coolant level stops decreasing by the electric water pump operation, repeat the step 6 above.

   NOTE: The motor coolant refilling will be complete in about 3 to 4 minutes.

8. For the air bleeding of the EV cooling system, operate the electric water pump for at least one minute according to either of the procedures below.
   (1) Not using M.U.T.-III
      a. Operate the electric motor switch with the brake pedal depressed.
      b. Turn on the power supply mode of the electric motor switch to make the READY (ready to drive) indicator illuminate for at least one minute.

NOTE: The electric water pump will run as long as the READY (ready to drive) indicator illuminates. If the READY (ready to drive) indicator continues to illuminate for at least one minute, the electric water pump has been activated for at least one minute.

   (2) When using M.U.T.-III

⚠ CAUTION

While the M.U.T.-III is communicating with the vehicle, the electric motor switch may not be turned off and no normally. Therefore, when you turn off the electric motor switch for that communication, wait for several seconds and then turn on it again (do not turn on it immediately).

      a. Turn off the power supply mode of the electric motor switch. Then connect the M.U.T.-III to the diagnosis connector.
      b. Turn the power supply mode of the electric motor switch to ON.
      c. Make the READY (ready to drive) indicator illuminate.
      d. From the system selection screen of M.U.T.-III, select "PHEV-ECU".
      e. From the PHEV-ECU screen, select "Actuator test".
      f. Select the item No. 8 "Water pump actuate".

9. Turn off the power supply mode of the electric motor switch to deactivate the electric water pump.

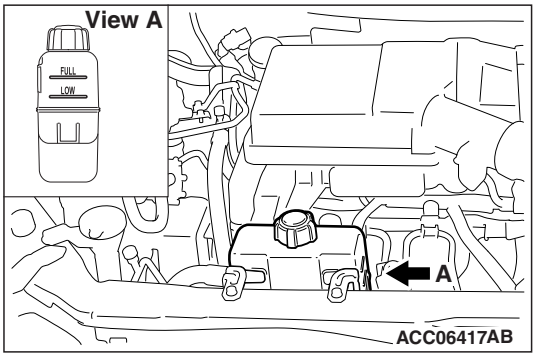

10. When the motor coolant level in EV radiator condenser tank is at the "LOW" line or higher, the air bleeding is complete.
11. If the motor coolant level in EV radiator condenser tank is at the "LOW" or lower, fill the motor coolant to the "FULL" line, and then perform the air bleeding of above step 8 again.
12. Adjust the coolant level so that the motor coolant level in EV radiator condenser tank comes to near the "FULL" line when the electric water pump is stopped.
13. Tighten the EV radiator condenser tank cap securely.

OPERATIONS UNDER THE VEHICLE

B1. CHECK SUSPENSION SYSTEM FOR DAMAGE AND LOOSENESS

M6020300100739

1. Check each portion of suspension for damage visually.
2. Check each installation bolt and nut for looseness by spanner or similar tool.

FRONT SUSPENSION

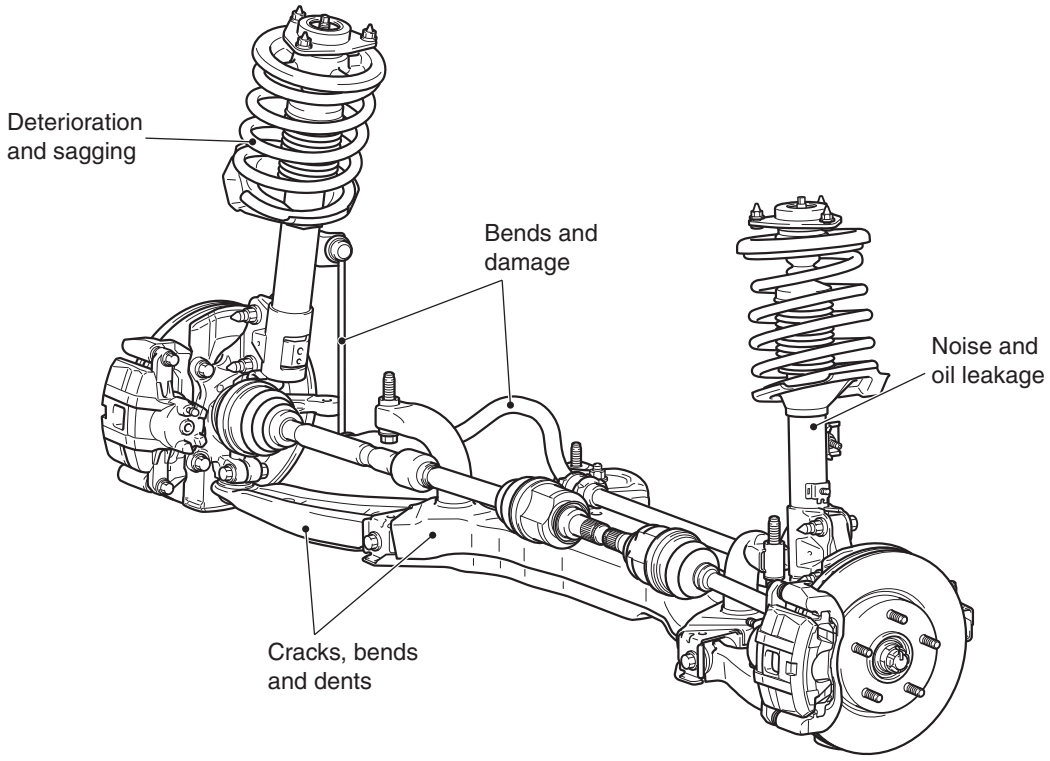

REAR SUSPENSION

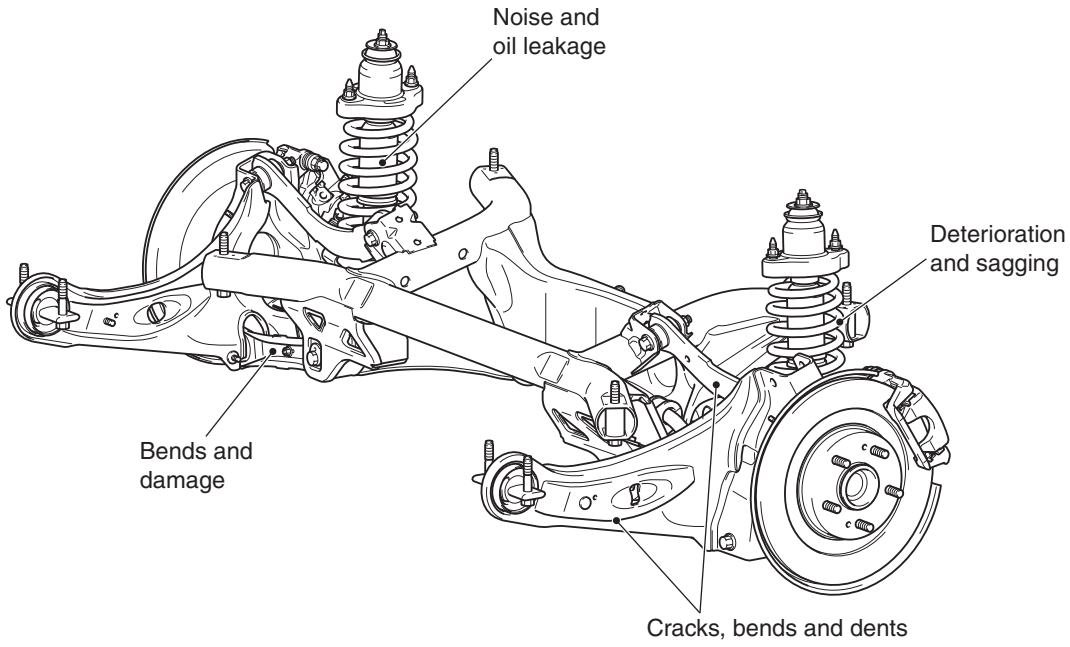

ACC00842

B2. CHECK SUSPENSION ARM BALL JOINTS FOR PLAY, AND DUST COVERS FOR DAMAGE

M6020300200491

LOWER ARM BALL JOINT AXIAL PLAY CHECK

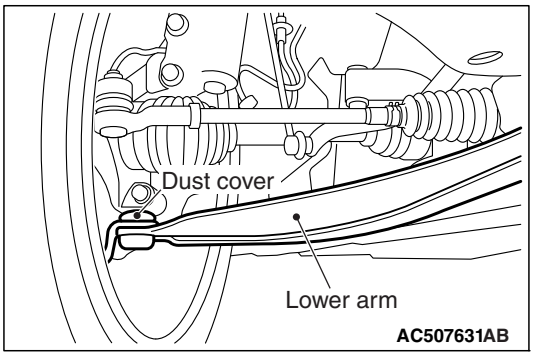

1. Raise the vehicle.
2. Move the lower arm up and down with your hands to check for an excessive play in the axial direction of the ball joint. If there is an excessive play, replace the lower arm assembly.

DUST COVERS FOR DAMAGE

Check dust covers for damage.

B3. CHECK DRIVESHAFT BOOTS FOR DAMAGE

M6020300400569

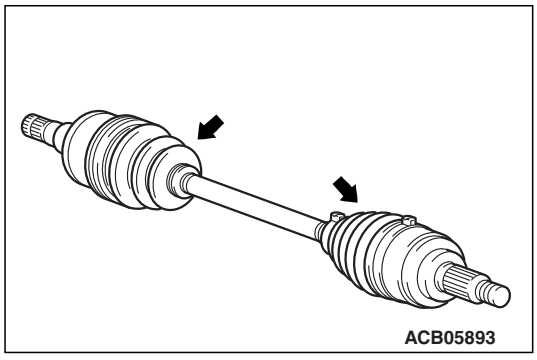

Check the driveshaft boots for damage.

B4. CHECK STEERING LINKAGE FOR DAMAGE AND LOOSE CONNECTIONS (INCLUDING SEALS AND BOOTS)

M6020300500522

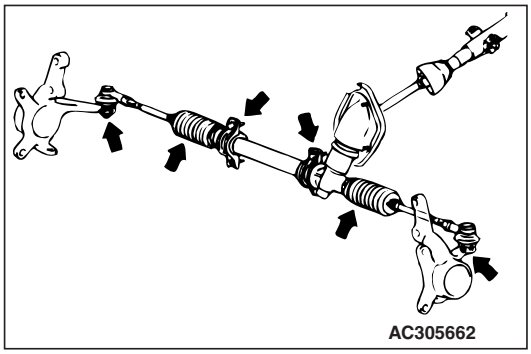

1. Move the steering wheel bit by bit to the left or right, and check to be sure that there is no play or looseness in the linkage coupling, that the installation is not loose, and that the rod or arm is not bent or damaged.

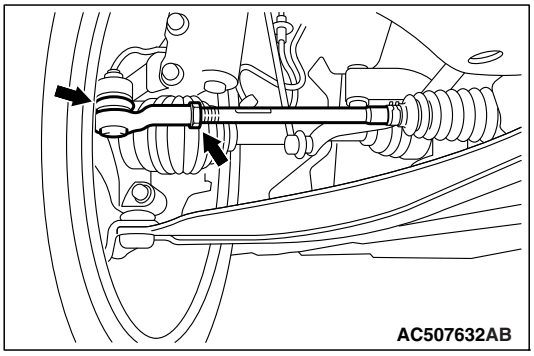

2. Check to be sure that the seal and boot of the ball joint are correctly installed (in the correct position), and that they are not damaged.
3. Check tie-rod end lock nut for looseness. If lock nut is loose, adjust toe-in and then tighten lock nut to the specified torque.

Tightening torque: 52 ± 2 N·m

B5. CHECK MANUAL TRANSMISSION FOR OIL LEAKAGE (IN CASE OF LEAKAGE, CHECK THE OIL LEVEL)

M6020302300494

CHECK OIL LEAKAGE

Check the transmission case for oil leakage visually or by touching it with hand.

NOTE: If an oil leakage is not detected, the oil level check is necessary.

CHECK OIL LEVEL

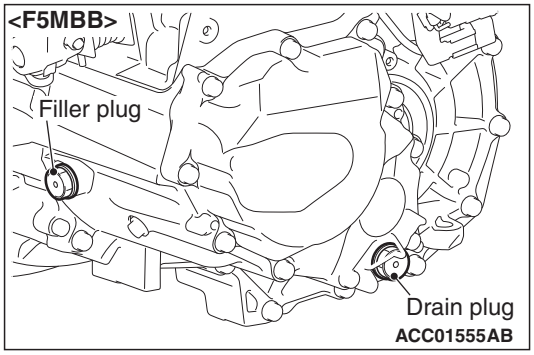

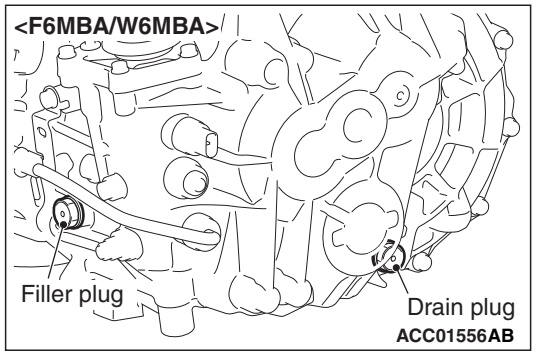

1. Remove the filler plug and gasket.

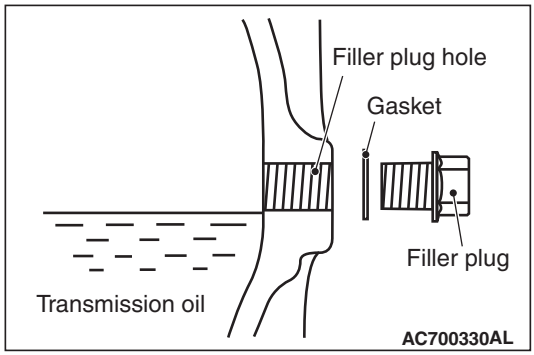

2. Check that the oil level is up to the lower edge of the filler plug hole.
3. Check that the oil is not noticeably dirty.
4. Install the filler plug and new gasket, then tighten them to the specified torque.

   Tightening torque:
   <F5MBB> 49 ± 19 N·m
   <F6MBA/W6MBA> 39 ± 11 N·m

B6. CHECK TRANSFER FOR OIL LEAKAGE (IN CASE OF LEAKAGE, CHECK THE OIL LEVEL)

M6020302400457

CHECK OIL LEAKAGE

Check the transfer case for oil leakage visually or by touching it with hand.

NOTE: If an oil leakage is not detected, the oil level check is necessary.

CHECK OIL LEVEL

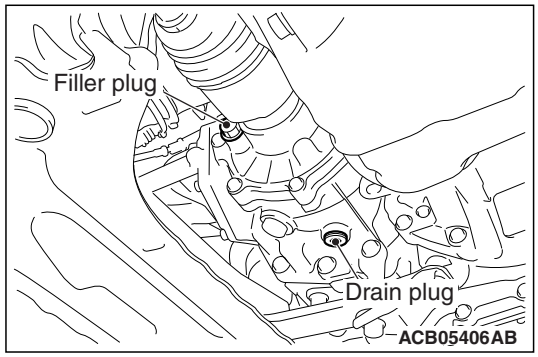

1. Remove the filler plug and gasket.

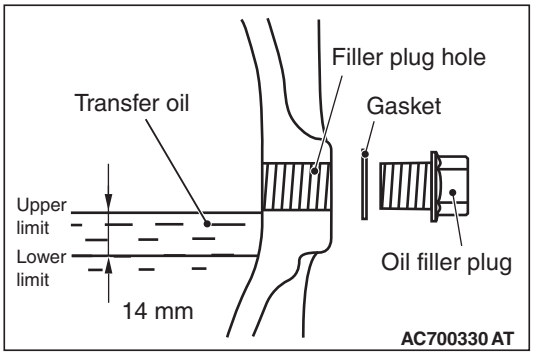

2. Check that the oil level is in between the upper limit (bottom of the filler plug hole) and the lower limit as shown.
3. Check that the oil is not excessively foul and has moderate viscosity.
4. If the oil level is not in between the upper limit and the lower limit, refill the specified oil to the bottom of the oil filler plug hole.

   Transfer oil: MITSUBISHI MOTORS GENUINE super hypoid gear oil API classification GL-5 SAE80

5. Install the filler plug and new gasket, and tighten to the specified torque.

   Tightening torque: 32 ± 2 N·m

B7. CHANGE GEAR OIL IN MANUAL TRANSMISSION

M6020300801021

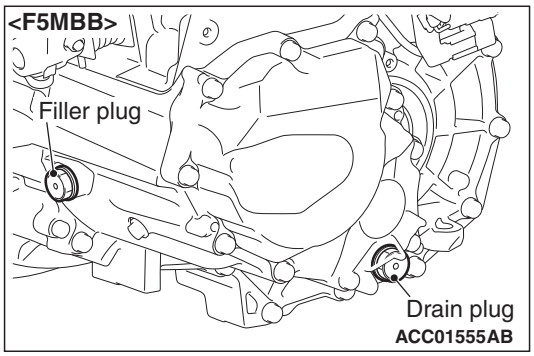

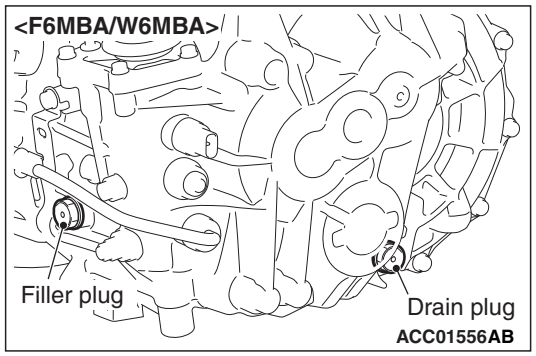

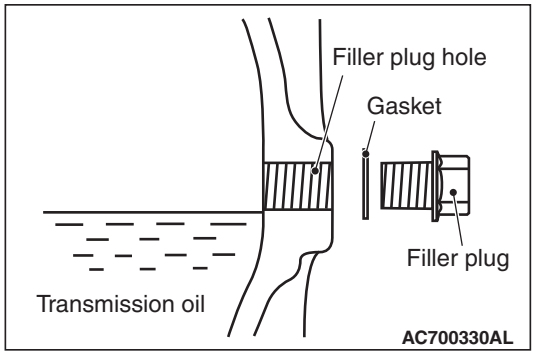

1. Remove the filler plug and gasket.
2. Remove the drain plug and gasket, and drain the oil.
3. Tighten the drain plug and new gasket, to the specified torque.

   Tightening torque:
   49 ± 19 N·m <F5MBB>
   39 ± 11 N·m <F6MBA/W6MBA>
4. Fill with MITSUBISHI MOTORS GENUINE NEW MULTI GEAR OIL API classification GL-3 SAE 75W-80 until the level comes to the lower portion of filler plug hole.

   Quantity:
   2.5 L <F5MBB>
   2.0 L <F6MBA/W6MBA>
5. Install the filler plug and new gasket, then tighten them to the specified torque.

   Tightening torque:
   49 ± 19 N·m <F5MBB>
   39 ± 11 N·m <F6MBA/W6MBA>

B8. CHANGE GEAR OIL IN TRANSFER

M6020302600495

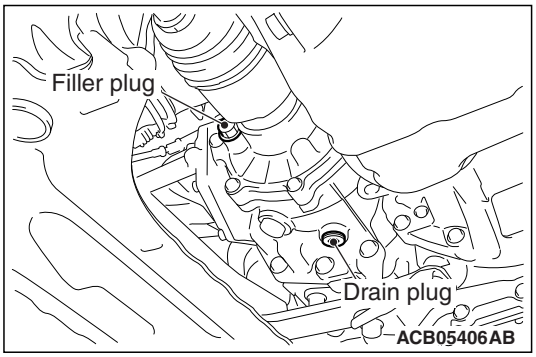

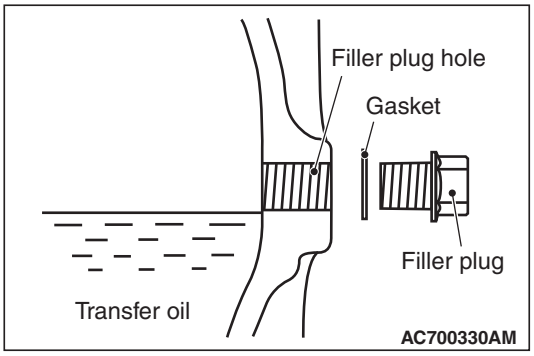

1. Remove the drain plug and gasket, to drain the transfer oil.
2. Install the drain plug and new gasket, and tighten to the specified torque.

   Tightening torque: 32 ± 2 N·m
3. Remove the filler plug and gasket, and fill the transfer oil up to the lower edge of the filler plug hole.

   Transfer oil: MITSUBISHI MOTORS GENUINE Super hypoid gear oil API classification GL-5 SAE80
   Filling amount: 0.47 L
4. Install the filler plug and new gasket, and tighten to the specified torque.

   Tightening torque: 32 ± 2 N·m

B9. CHECK REAR DIFFERENTIAL FOR OIL LEAKAGE (IN CASE OF LEAKAGE, CHECK THE OIL LEVEL)

M6020302700298

CHECK OIL LEAKAGE

Check the area around the differential for oil leakage visually or by touching it with hand.

NOTE: If an oil leakage is not detected, the oil level check is necessary.

CHECK OIL LEVEL

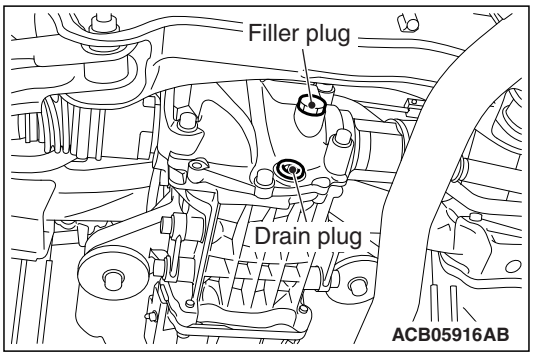

1. Remove the filler plug.

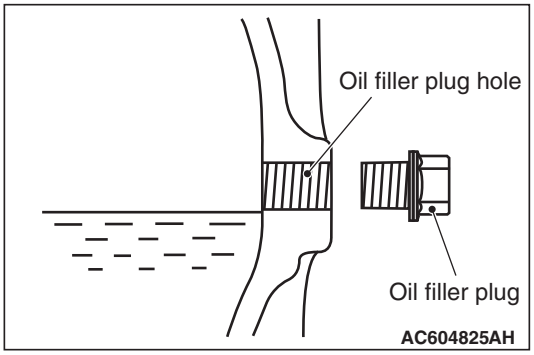

2. Check that the oil level is up to the lower edge of the oil filler plug hole.
3. Check that the oil is not noticeably dirty.
4. Tighten the filler plug to the specified torque.

   Tightening torque: 32 ± 2 N·m

B10. CHANGE GEAR OIL IN REAR DIFFERENTIAL

M6020301800300

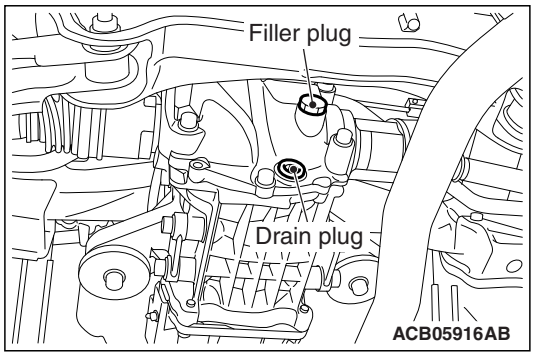

1. Remove the filler plug.
2. Remove the drain plug and drain oil.
3. Tighten the drain plug to the specified torque.

   Tightening torque: 32 ± 2 N·m

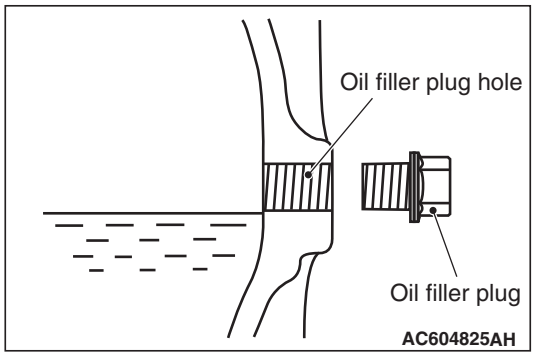

4. Fill the oil until the level comes to the lower portion of the filler plug hole.

   Specified gear oil: MITSUBISHI MOTORS GENUINE Super Hypoid gear oil API classification GL-5, SAE 80
   Amount to use: approx. 0.4 L

5. Tighten the filler plug to the specified torque.

   Tightening torque: 32 ± 2 N·m

B11. CHECK EXHAUST PIPE CONNECTIONS FOR GAS LEAKAGE, AND CHECK PIPE INSTALLATION

M6020301200858

1. Confirm that the exhaust pipe does not interfere with any body components.
2. Check the exhaust pipe for damage by stones, etc.
3. Start the engine and check for gas leaks from the exhaust pipe connections.

B12. CHECK FRONT TRANSAXLE FOR OIL LEAKAGE (In case of leakage, check the oil level)

M6020303300011

CHECK OIL LEAKAGE

Check the transmission case for oil leakage visually or by touching it with your hand.

NOTE: If an oil leakage is determined, check the oil level.

CHECK OIL LEVEL

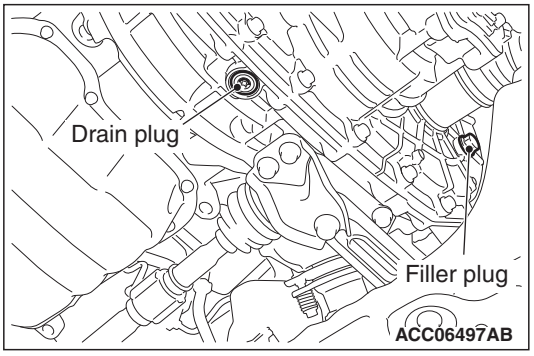

1. Remove the filler plug and gasket.

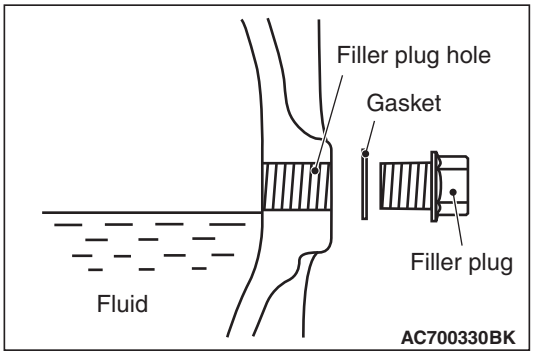

2. Check that the fluid level is just below the lower edge of the filler plug hole.
3. Check that the fluid is not excessively foul and has moderate viscosity.
4. If the level is below the filler plug hole, add the specified fluid up to the end of the filler plug hole.

   Brand name:
   MITSUBISHI MOTORS GENUINE ATF SP III

5. Install the filler plug and new gasket, and tighten to the specified torque.

   Tightening torque: 32 ± 2 N·m

B13. CHECK REAR TRANSAXLE FOR OIL LEAKAGE (In case of leakage, check the oil level)

M6020303400018

CHECK OIL LEAKAGE

Check the transmission case for oil leakage visually or by touching it with your hand.

NOTE: If an oil leakage is not detected, the oil level check is necessary.

CHECK OIL LEVEL

1. Remove the weight from the rear suspension crossmember.

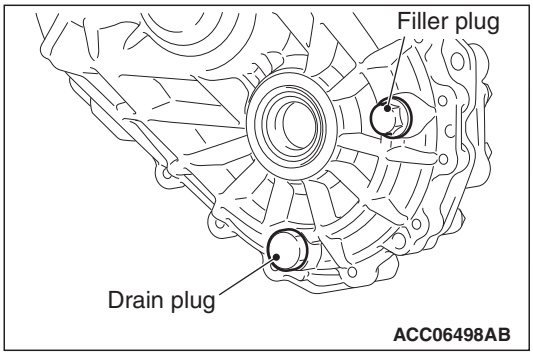

2. Remove the filler plug and gasket.

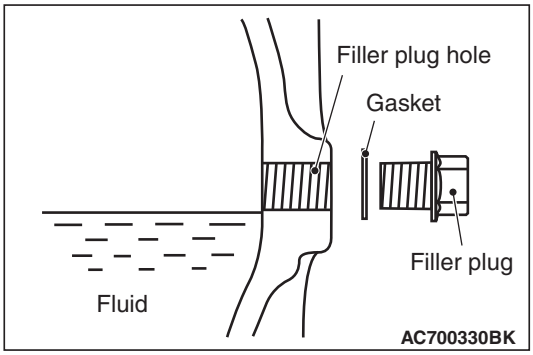

3. Check that the fluid level is just below the lower edge of the filler plug hole.
4. Check that the fluid is not excessively foul and has moderate viscosity.
5. If the level is below the filler plug hole, add the specified fluid up to the end of the filler plug hole.

   Brand name:
   MITSUBISHI MOTORS GENUINE ATF SP III

6. Install the filler plug and new gasket, and tighten to the specified torque.

   Tightening torque: 32 ± 2 N·m

7. Install the weight to the rear suspension crossmember.

B14. CHANGE FRONT TRANSAXLE OIL

M6020303500015

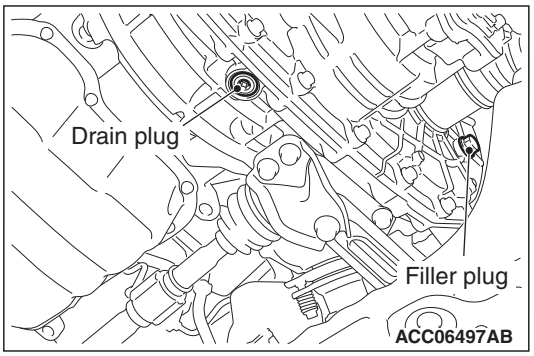

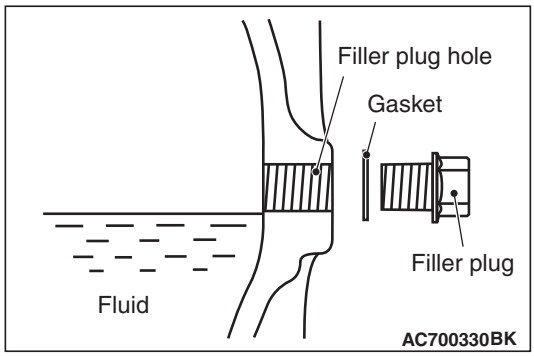

1. Remove the drain plug and gasket, to drain the fluid.
2. Install the drain plug and new gasket, and tighten to the specified torque.

   Tightening torque: 35 ± 4 N·m
3. Remove the filler plug and gasket, and fill the fluid up to the lower edge of the filler plug hole.

   Brand name:
   MITSUBISHI MOTORS GENUINE ATF SP III
   Quantity: Approximately 3.1 L

   NOTE:
   1. *If the valve body assembly is replaced, refill the fluid and then install the filler plug with the gasket.*
      Quantity: Approximately 3.1 L
   2. *Drive the vehicle at 40 km/h for at least five minutes, and then refill the fluid up to the lower edge of the filler plug hole.*
      Quantity: Addition of approximately 0.4 L
4. Install the filler plug and new gasket, and tighten to the specified torque.

   Tightening torque: 32 ± 2 N·m

B15. CHANGE REAR TRANSAXLE OIL

M6020303600012

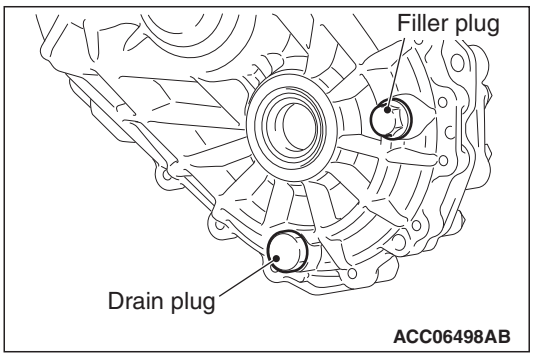

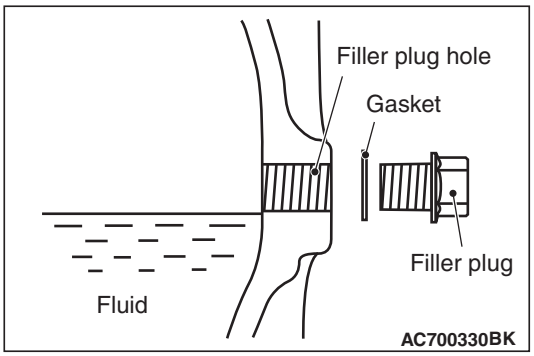

1. Remove the drain plug and gasket, to drain the fluid.
2. Install the drain plug and new gasket, and tighten to the specified torque.

   Tightening torque: 32 ± 2 N·m
3. Remove the weight from the rear suspension crossmember.
4. Remove the filler plug and gasket, and fill the fluid up to the lower edge of the filler plug hole.

   Brand name:
   MITSUBISHI MOTORS GENUINE ATF SP III
   Quantity: 0.85 L
5. Install the filler plug and new gasket, and tighten to the specified torque.

   Tightening torque: 32 ± 2 N·m
6. Install the weight to the rear suspension crossmember.

OPERATIONS INSIDE THE VEHICLE

C1. CHECK BRAKE PEDAL AND CLUTCH PEDAL FOR FREE PLAY

M6020400100996

⚠ CAUTION

Do not apply grease or lubricant to the switch and the switch installation section to avoid malfunction of the switch. In addition, do not use gloves which have grease on them.

BRAKE PEDAL HEIGHT CHECK

1. Turn up the floor carpet under the brake pedal.
2. Remove the stop lamp switch.

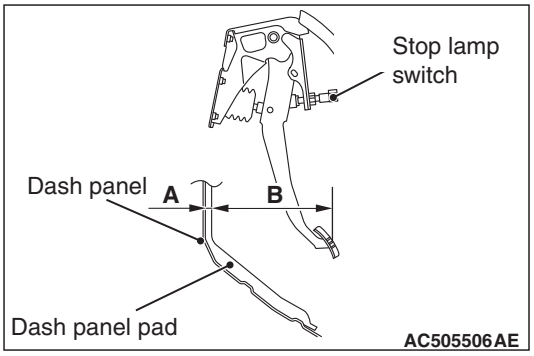

3. Use a needle or similar tool to measure the dimension A in the figure (distance from the dash panel pad surface to the dash panel).
4. Measure the dimension B in the figure (distance from the pedal pad surface to the dash panel pad surface).
5. Make sure that the total of the dimensions A and B measured in Steps 3 and 4 (brake pedal height) is within the standard value.

   Standard value (A+B): 221.8 – 227.8 mm

6. When the brake pedal height is not within the standard value, inspect the brake pedal in the following procedure.
   (1) Remove the brake pedal assembly.
   (2) Check the removed brake pedal assembly for distortion, and replace it when deformed.
   (3) Install the brake pedal assembly.

NOTE: When installing, compress the dash panel pad.

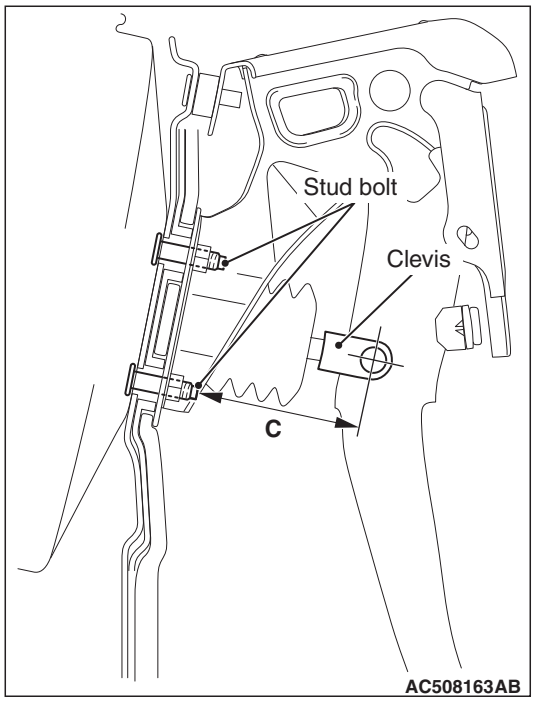

   (4) Measure the brake pedal height again, and make sure that it is within the standard value (A+B).
   When the measured value is not within the standard value, measure the dimension C in the figure (distance from the stud bolt end to the clevis hole centre), and make sure it is within the standard value (C).

   Standard value (C): 75.8 – 80.2 mm

   (5) When the measured value is not within the standard value (C), replace the brake booster.

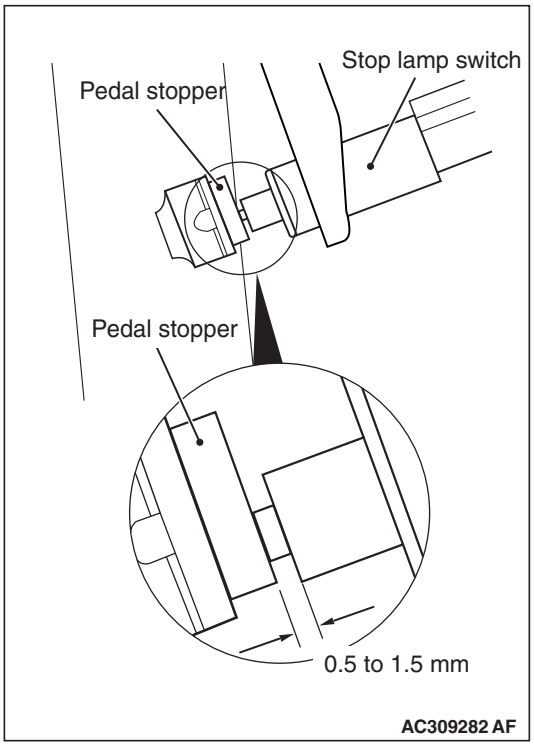

7. After checking the brake pedal height, install the stop lamp switch in the following procedure:
   (1) Screw in the stop lamp switch until its thread contacts the pedal stopper, then turn the switch approximately one eighth of a clockwise turn to fix it. While doing this, pull and hold the brake pedal by hand.
   (2) Check that the clearance between the stop lamp switch and the pedal stopper is as shown in the figure.

⚠ CAUTION

Make sure that the stop lamp is not illuminated when the brake pedal is not depressed.

   (3) Connect the stop lamp switch connector.
8. Recover the floor carpet under the brake pedal.

BRAKE PEDAL FREE PLAY CHECK AND ADJUSTMENT

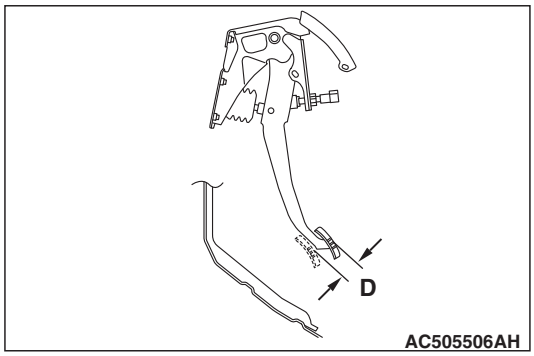

1. With the engine stopped, depress the brake pedal 2 or 3 times to relief the vacuum in the brake booster. Then, press the brake pedal with your finger and check if the pedal stroke until the pedal becomes heavy (play) is within the standard value.

   Standard value (D): 3 – 8 mm
2. When the brake pedal free play is not within the standard value, check the brake pedal-to-clevis pin looseness, clevis pin-to-booster operating rod looseness, brake pedal height, and stop lamp switch position, and adjust or replace as necessary.

BRAKE PEDAL-TO-FLOOR PANEL CLEARANCE CHECK AND ADJUSTMENT

1. Turn up the floor carpet under the brake pedal.

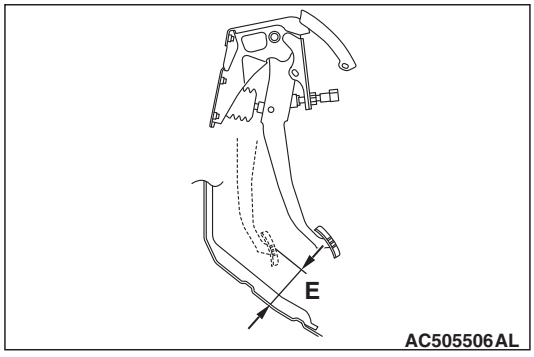

2. Start the engine and depress the brake pedal with approximately 500 N, and measure clearance between the brake pedal and the floor panel.

   Standard value (E): 65 mm or more
3. When the clearance is not within the standard value, check for the air in the brake line and thickness of the disc brake pad, and correct or replace as necessary.
4. Recover the floor carpet under the brake pedal.

CLUTCH PEDAL CHECK

NOTE: This clutch pedal assembly is unadjustable because of its structure.

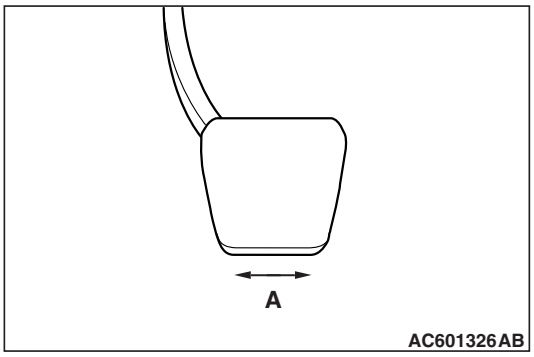

1. Measure the clutch pedal looseness (A).
   Standard value (A): 4 mm or less
2. When the clutch pedal looseness is not within the standard value, the clutch pedal assembly may be faulty. In this case, check the clutch pedal assembly, and replace it if necessary.

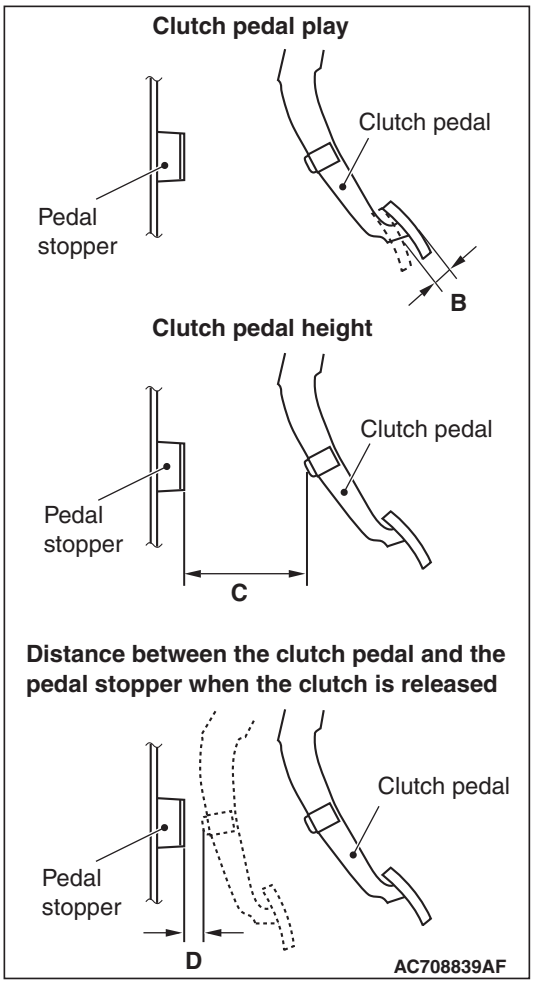

3. Check that the clutch pedal play (B), the clutch pedal height (C) and the clearance (D) between the clutch pedal and the pedal stopper when the clutch is disengaged are within the standard value.
   Standard value (B): 4 – 9 mm
   Standard value (C):
   99 – 105 mm <4J1-LHD>
   110 – 116 mm <4N1-LHD>
   77 – 82 mm <4N1-RHD>
   Standard value (D):
   15 mm or more <LHD>
   11 mm or more <RHD>
4. When the clutch pedal play, clutch pedal height and the clearance between the clutch pedal and pedal stopper when the clutch is disengaged are not within the standard value, the air may be intruded into the hydraulic system, or either the clutch master cylinder or the concentric slave cylinder may be faulty. In this case, perform air bleeding, or check the clutch master cylinder or the concentric slave cylinder, and replace it if necessary.

C2. CHECK PARKING BRAKE LEVER STROKE AND PLAY

M6020400200904

STROKE CHECK (CONTROL FORCE APPROXIMATELY 200 N)

Standard value: 6 – 7 notches

STROKE ADJUSTMENT

If the parking brake lever stroke is out of the standard range, adjust as described below:

1. Remove the rear floor console front panel assembly.

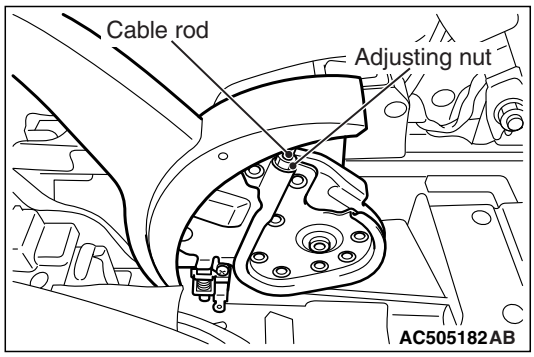

2. Loosen the adjusting nut to the end of the cable rod in order to allow slack in the cables.

3. Check that the parking brake lever on the caliper side is touching the parking brake lever bracket.

   NOTE: If the parking brake lever is not touching the parking brake lever bracket, the parking brake cable might be stuck or routed incorrectly, or there might be a problem with the automatic adjustment mechanism inside the rear brake calipers. Therefore, it is necessary to check the parking brake cable and to disassemble and inspect the rear brake calipers.
4. Depress the brake pedal repeatedly until the brake pedal has no change in its stroke.

   NOTE: Depressing the brake pedal repeatedly adjusts pad clearance correctly.

⚠ CAUTION

Be careful that the parking brake lever notch number should be within the standard range. If the notch number is too low, rear brake dragging can be caused.

5. Adjust the parking brake lever stroke to the standard value by turning the adjusting nut. After adjustment, check that there is no free play between the adjusting nut and the parking brake lever.
6. After the parking brake lever stroke is adjusted, raise the rear of the vehicle. Release the parking brake, and turn the rear wheels to confirm that the rear brakes are not dragging.

C3. REPLACE AIR PURIFIER FILTER

M6020400300495

1. Remove the glove box.
2. Loosen the two lugs as shown to replace the clean air filter.

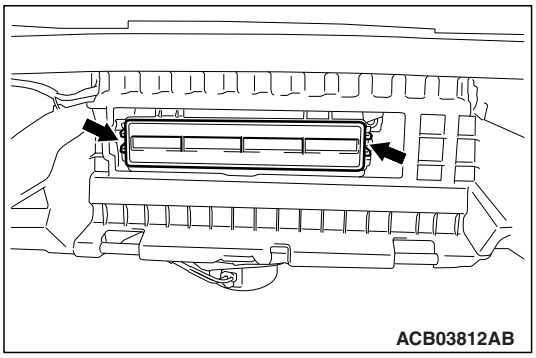

NOTE: The arrow on the clean air filter should face downwards.

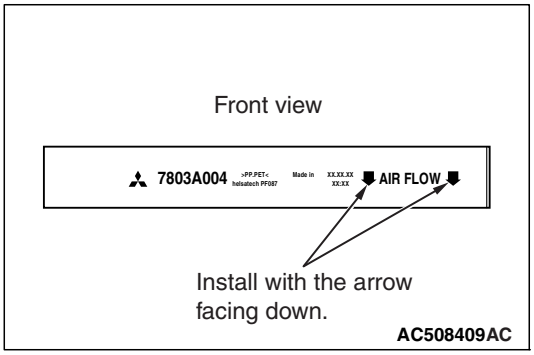

3. Install the glove box.

OPERATIONS OUTSIDE THE VEHICLE

D1. CHECK WHEEL ALIGNMENT

M6020500101435

FRONT WHEEL ALIGNMENT

⚠ CAUTION

Perform a calibration for the ASC-ECU to learn the steering wheel sensor neutral point <Vehicles with ASC>.

- Before the wheel alignment measurement, maintain the front suspension, the steering system and the wheel tyres in good condition.
- Park the vehicle on a level surface, and position the front wheel in the straight- ahead position to measure the wheel alignment.

TOE-IN

Standard value:
At the centre of tyre tread: 1 ± 2 mm
Toe-angle (per wheel): 0°02' ± 0°04'

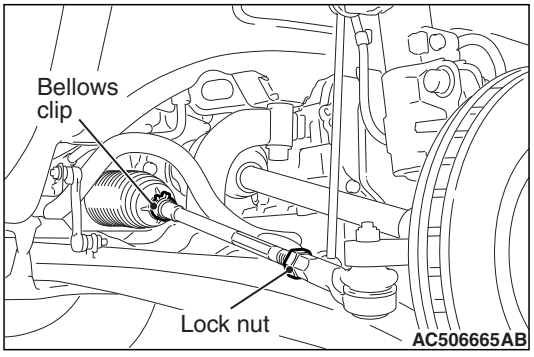

1. Loosen the lock nut with tie-rod bellows clip removed, and then perform the adjustment by turning the tie-rod left/right at the same degree in the opposite direction.

   NOTE: The toe moves to the outside by turning the tie-rod: left to the forward direction, and right to the reverse direction.

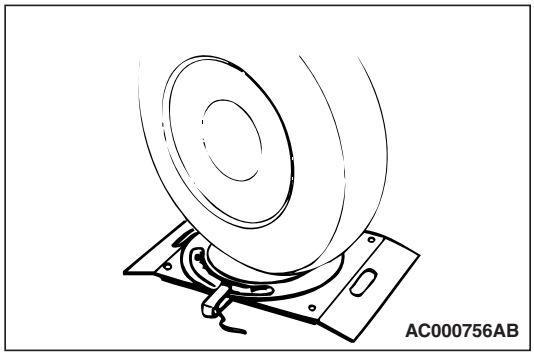

2. Place the front wheel onto the turning radius gauge, and measure the steering angle.

Standard value:

Inner wheel	38° 50' ± 1° 30' (Difference between right and left wheels must be 2°00' or less)
Outer wheel (Reference value)	32° 20'

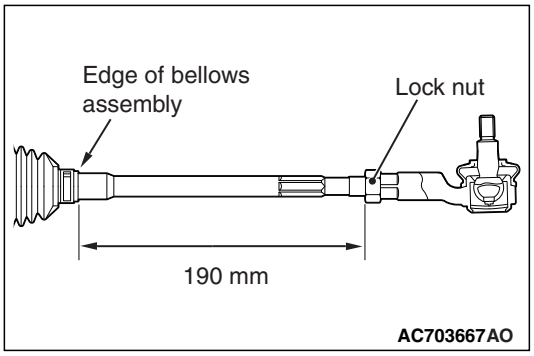

3. If the measured value is not within the standard value, adjust the tie-rod ends (right and left), and repeat Steps 1 and 2.
4. If the measured value is not within the standard value after performing Step 3, replace the steering gear and linkage assembly.

CAMBER, CASTER AND KINGPIN INCLINATION

CAMBER

Standard value: 0°20' ± 0°30'

CASTER

Standard value: 2°35' ± 0°45'

NOTE:

- *Difference between right and left wheels must be 0°30' or less.*
- *The camber and the caster are pre-adjusted at factory and not adjustable.*

KINGPIN INCLINATION

Standard value: 12°45' ± 1°30'

⚠ CAUTION

Do not apply the vehicle weight to the wheel bearing while loosening the driveshaft nut.

NOTE:

- *The camber is pre-adjusted at factory and is not adjustable.*

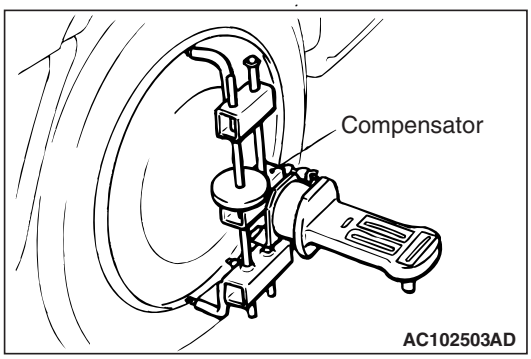

As for vehicles with aluminium wheel, use a compensator to measure the camber and caster.

REAR WHEEL ALIGNMENT

1. Before the wheel alignment measurement, adjust the rear suspension, wheel, and tyres in good condition.
2. Park the vehicle on a level surface to measure the wheel alignment.

TOE-IN

Standard value:
At the centre of tyre tread: 3 ± 2 mm
Toe-angle (per wheel): 0 ° 02' – 0 ° 12'

If it is out of the standard range, adjust as follows:

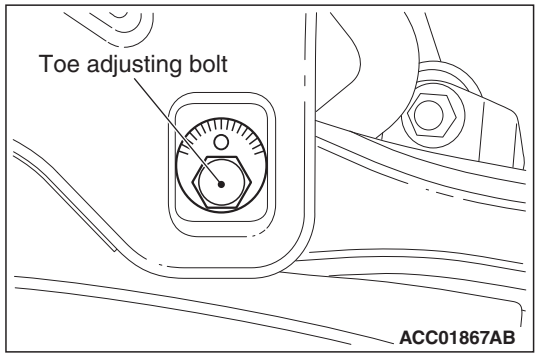

Turn the toe adjusting bolt (the mounting bolt inside the body on the control link) to adjust.

Left wheels: Clockwise (+) Toe in
Right wheels: Clockwise (–) Toe in

Toe-in varies approximately 3.2 mm (equivalent to 0°16' of the toe angle for one side) for each scale mark.

CAMBER

Standard value: −0°30' ± 0°45'

NOTE:

- *Difference between right and left wheels must be 0°30' or less.*
- *The camber is pre-adjusted at factory and is not adjustable.*

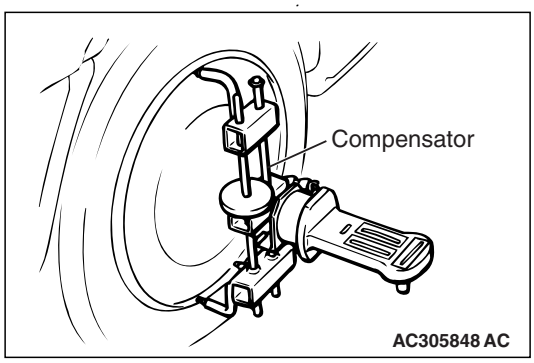

As for vehicles with aluminium wheel, use a compensator to measure the camber and caster.

D2. CHECK FRONT AND REAR WHEEL BEARINGS FOR PLAY

M6020500200376

<FRONT WHEEL>

1. Remove the front caliper assembly and front brake disc, and retain the front caliper assembly with a wire and the like to prevent from falling.

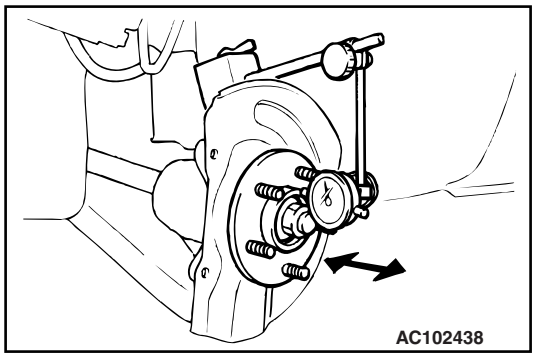

2. Set a dial gauge as shown in the figure. Move the hub in the axial direction and measure the looseness.

   Limit: 0.05 mm

3. If the play exceeds the limit, disassemble hub knuckle to check each component. If the front hub bearing is faulty, replace it.
4. After checking, install the front brake disc and the front caliper assembly.

<REAR WHEEL>

1. Remove the caliper assembly and the brake disc. Retain the caliper assembly with a wire and the like to prevent from falling.

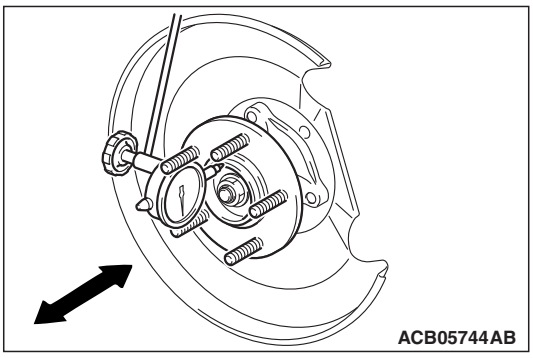

2. Set a dial gauge as shown in the figure. Move the hub in the axial direction and measure the looseness.

   Limit: 0.05 mm

3. When the looseness exceeds the limit, replace the rear wheel hub assembly.
4. After checking, install the brake disc and the caliper assembly, and tighten the caliper mounting bolt to the specified torque.

   Tightening torque: 58 ± 7 N·m

D3. CHECK BRAKE HOSES AND PIPES FOR LEAKAGE

M6020500300607

1. Check entire circumference and length of hoses and pipes.
2. Check all clamps for tightness and connections for leakage.

D4. CHECK BRAKE PADS AND DISCS FOR WEAR

M6020500401168

<FRONT>

⚠ CAUTION

If there is a significant difference in thickness between the brake pads at right and left, check the sliding area and the run-out of the brake disc.

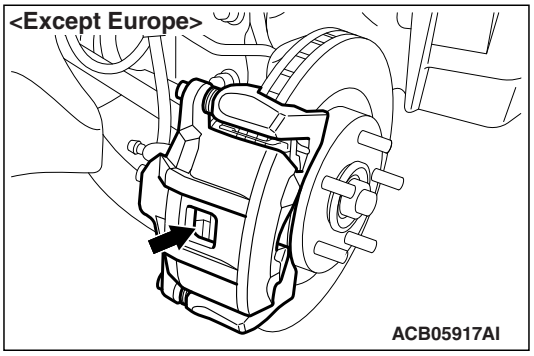

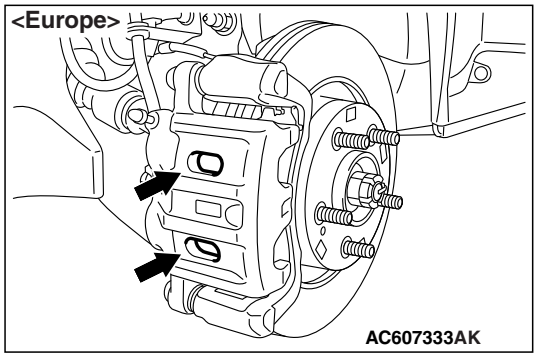

1. Visually check the thickness of brake pad from the inspection hole of the caliper body.

   Standard value: 10.0 mm
   Limit: 2.0 mm

2. If the brake pad thickness is less than the limit value, replace the brake pad.

<REAR>

⚠ CAUTION

If there is a significant difference in thickness between the brake pads at right and left, check the sliding area and the run-out of the brake disc.

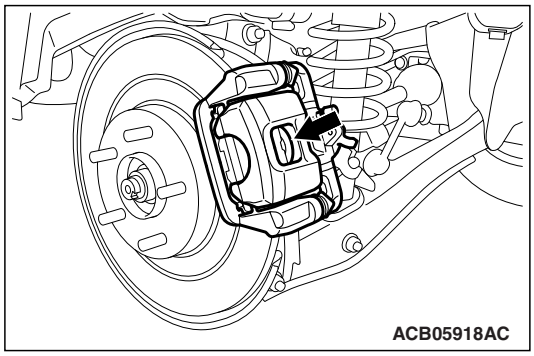

1. Visually check the thickness of brake pad from the inspection hole of the caliper body.

   9.0 mm
   1.5 mm

2. If the brake pad thickness is less than the limit value, replace the brake pad.

BRAKE DISC CHECK

BRAKE DISC THICKNESS CHECK

1. Remove contaminants or corrosion from the brake disc surface.

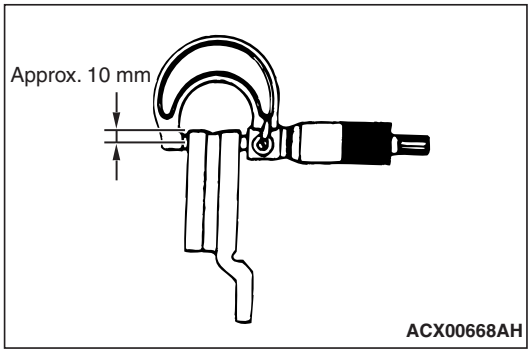

2. Use a micrometer to measure the brake disc thickness at minimum eight points which are 10 mm inward from its circumference.

   <Front>
   Standard value:
   26.0 mm <Except Europe>, 24.0 mm <Europe>
   Limit:
   24.4 mm <Except Europe>, 22.4 mm <Europe>
   <Rear>
   Standard value: 10.0 mm
   Limit: 8.4 mm

3. If the brake disc thickness is worn beyond the limit value at more than one point, replace the brake disc and check its run-out.

BRAKE DISC THICKNESS UNEVENNESS CHECK AND CORRECTION

1. Remove contaminants or corrosion from the brake disc surface.

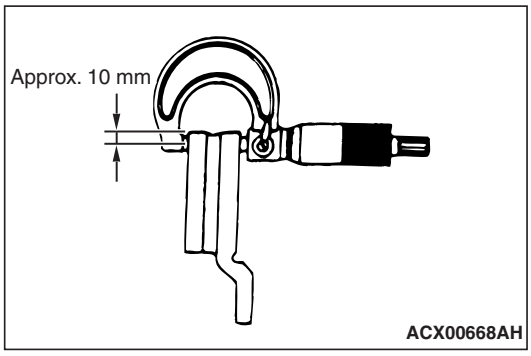

2. Use a micrometer to measure the brake disc thickness at minimum eight points which are 10 mm inward from its circumference. Then record the measurements.
3. If the brake disc thickness unevenness (the difference between the maximum and minimum values measured above) is 0.015 mm or less, it is within the standard value.
4. If the brake disc thickness unevenness exceeds the standard value, grind it according to the procedure below while it is mounted on the vehicle.

   NOTE: If it is suspected that the brake disc thickness will become less than the limit value after the grinding, replace the brake disc and check its run-out.

   (1) Check for wheel bearing looseness in the axial direction.

⚠ CAUTION

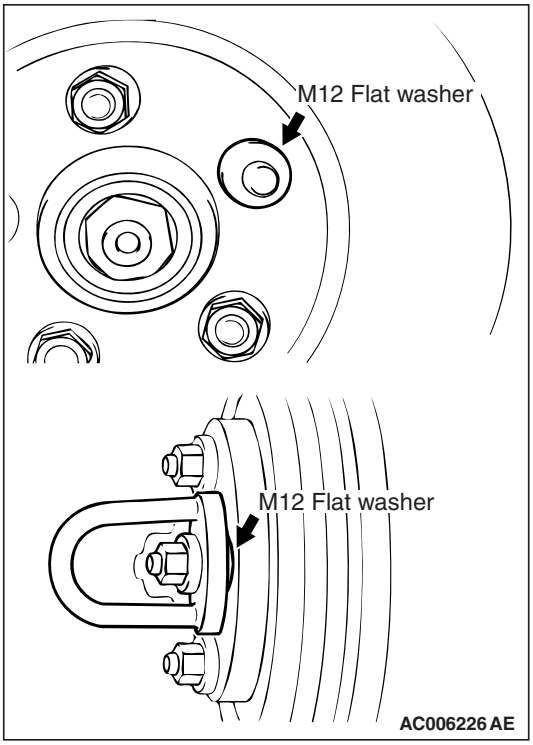

- **Insert M12 plain washer and then install the adapter as shown before grinding. Failure to use the M12 plain washer will cause the brake disc to be deformed and earth incorrectly.**
- **To grind the brake disc, ensure that all the nuts (M12 X 1.5) are tightened evenly and in a diagonal sequence to the specified torque (100 N·m). Failure to use all the nuts (M12×1.5), excessive or uneven tightening torque will cause the brake disc to deform or judder.**

   (2) Correct the brake disc uneven thickness by grinding it while in place on the vehicle.

BRAKE DISC RUN-OUT CHECK AND CORRECTION

1. Check for wheel bearing looseness in the axial direction.
2. If the axial play is within the limit value, secure the brake disc by tightening the nut (M12×1.5) evenly to the specified torque (100 N·m).If the axial play still exceeds the limit value, replace the wheel bearing. Then secure the brake disc by tightening the nut (M12×1.5) evenly to the specified torque (100 N·m).

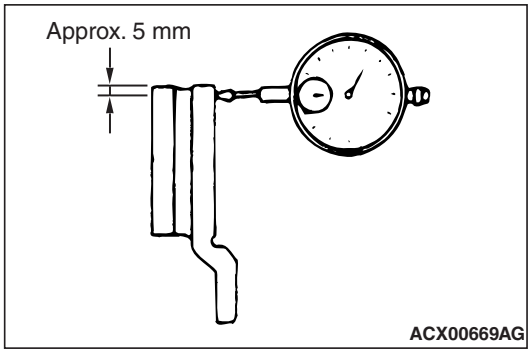

3. Place a dial gauge ca. 5 mm inward from the circumference of the brake disc to measure its run-out.

   Limit:
   0.06 mm <Front>
   0.08 mm <Rear>

4. If the brake disc run-out exceeds the limit value, rephase the brake disc to the hub so that the minimum brake disc run-out is obtained.

D5. CHECK FUEL HOSES AND PIPES FOR LEAKAGE OR DETERIORATION

M6020500600619

1. Check entire circumference and length of hoses and pipes.
2. Check all clamps for tightness and connections for leakage.

OPERATIONS AFTER ENGINE IS WARMED UP

E1. CHECK FLUID LEVEL IN AUTOMATIC TRANSMISSION AND CVT

M6020601400466

<F1CJA and W1CJA>

1. Drive the vehicle until the CVT fluid is warmed up to the normal operating temperature (70 to 80°C).

   NOTE: Use M.U.T.-III. to measure the CVT fluid temperature.

   NOTE:

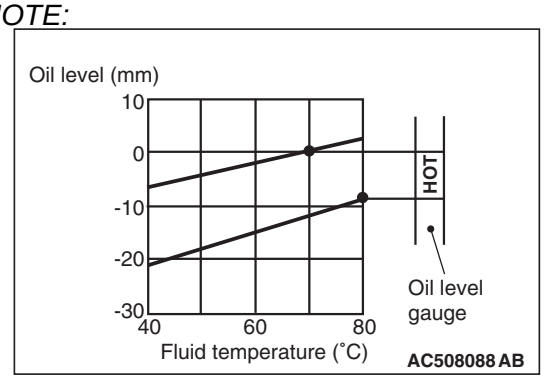

   When a certain amount of time is required to warm up the CVT fluid to the normal operating temperature (70 to 80℃), check the oil level referring to the characteristics chart.

2. Park the vehicle on a level surface.
3. Move the selector lever to every position to fill the torque converter and the hydraulic circuit with the CVT fluid, and then move the selector lever to "P" or "N" range.
4. Wipe clean the area around the oil level gauge, and then remove the oil level gauge to check the condition of the CVT fluid.

   NOTE: If the CVT fluid smells burnt or is excessively deteriorated or dirty, the CVT fluid is contaminated with particles of the metal bushings and friction material. In these cases, the transmission must be overhauled.

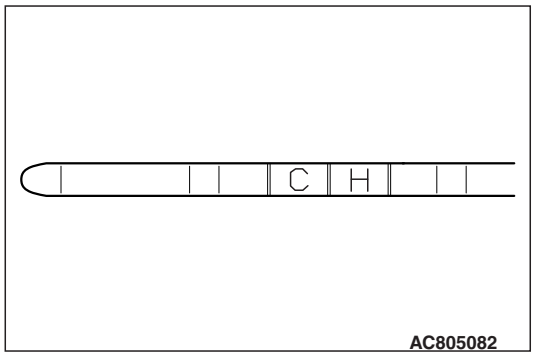

5. Check that the CVT fluid level is within the "HOT" area on the oil level gauge. If the fluid level is low, add the CVT fluid to the "HOT" level.

   CVT fluid: MITSUBISHI MOTORS GENUINE CVTF-J4

NOTE: When the CVT fluid level is low, the oil pump sucks air together with the CVT fluid, and produces air bubbles in the hydraulic circuit. The air bubbles in the hydraulic circuit decreases the hydraulic pressure, causing the delayed gearshift or slippage of the belt, clutch, and brake. When the CVT fluid level is too high, the fluid is stirred by the gear and foams up, and the problems similar to those when the CVT fluid level is low will occur. In either case, air bubbles cause the overheat and oxidation of the CVT fluid, which prevents normal operation of the valve, clutch, and brake. Beside, when the CVT fluid is foamy, it flows out of the transmission vent hole. This may be taken as the fluid leakage by mistake.

6. Insert the oil level gauge securely.

<W6AJA>

1. Drive the vehicle until the A/T fluid temperature rises to the normal operating temperature (70 – 80°C).

   NOTE: The A/T fluid temperature is measured with M.U.T.-III MB991958 (M.U.T.-III sub assembly).

   NOTE:

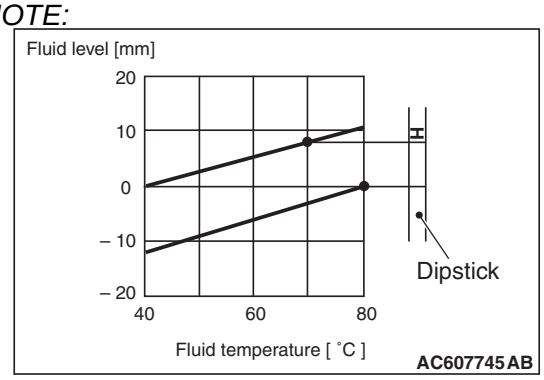

   If it takes some amount of time until the A/T fluid reaches its normal operating temperature [70 – 80°C], check the A/T fluid level by referring to the left diagram.

2. Park the vehicle on a level surface.
3. Move the selector lever through all positions to fill the torque converter and the hydraulic circuits with fluid, and then move the selector lever to the "N" position.
4. After wiping off any dirt around the dipstick, remove the dipstick and check the condition of the A/T fluid.

   NOTE: If the A/T fluid smells as if it is burnt, it means that the A/T fluid has been contaminated by fine particles from the bushings and friction materials. Transmission overhaul and cooler line flushing may be necessary.

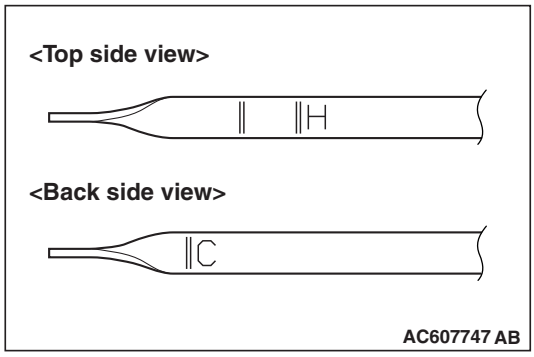

5. Check A/T fluid level is at the "H" mark on the dipstick. If the A/T fluid level is less than this, add MITSUBISHI MOTORS GENUINE ATF-J3 until the level reaches the "H" mark.

   NOTE: If the A/T fluid level is too low, the oil pump will draw in air along with the A/T fluid, which will cause to form bubbles. If the A/T fluid level is too high, rotating components inside the transmission will churn the fluid and air into a foamy liquid. Both conditions (level too low or too high) will cause the hydraulic pressure to drop, which will result in late shifting and slipping of the clutches and brakes.

   NOTE: In either case, air bubbles can interfere with normal valve, clutch, and brake operation. Also, foaming can cause A/T fluid to escape from the transmission vent where it may be mistaken for a leak.

6. Securely insert the dipstick.

   NOTE: The A/T fluid should always be replaced under the following conditions:

   - *When troubleshooting the transmission.*
   - *When overhauling the transmission.*
   - *When the A/T fluid is noticeably dirty or burnt (driving under severe conditions).*

E2. CHANGE AUTOMATIC TRANSMISSION FLUID AND CVT FLUID

M6020601500463

SPECIFICATIONS

CVT and Automatic transmission fluid	Quantity	Remark
MITSUBISHI MOTORS GENUINE CVTF-J4	7.1 L	F1CJA and W1CJA
MITSUBISHI MOTORS GENUINE ATF-J3	8.2 L	W6AJA

CHANGE PROCEDURE
<F1CJA and W1CJA>

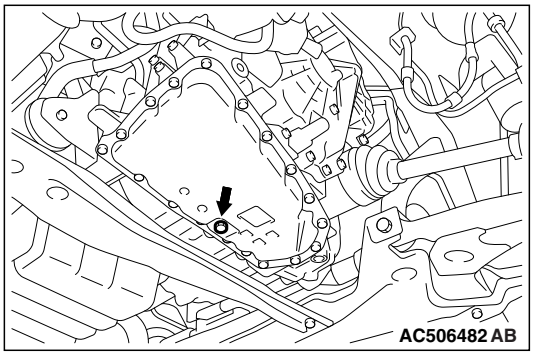

1. Remove the drain plug on the bottom of the transmission case to drain the CVT fluid.

   Draining amount: Approximately 5.5 L

2. Install the drain plug with a new gasket to the transmission case, and tighten it to the specified torque.

   Tightening torque: 34 ± 2 N·m

⚠ CAUTION

If the transmission case becomes full before filling 5.5 L of CVT fluid, stop filling the CVT fluid.

3. Fill in the new CVT fluid through the oil filler tube.

   Filling amount: Approximately 5.5 L

   CVT fluid: MITSUBISHI MOTORS GENUINE CVTF-J4

4. Start up the engine and let it idle for 1 to 2 minutes.
5. Move the selector lever to every position, and then move it to the P or N range.
6. Stop the engine and perform the above steps 1 to 5 again.
7. Stop the engine, and discharge a small amount of CVT fluid to check for fouling. If fouling is found, repeat steps 1 to 5 until clean CVT fluid comes out.

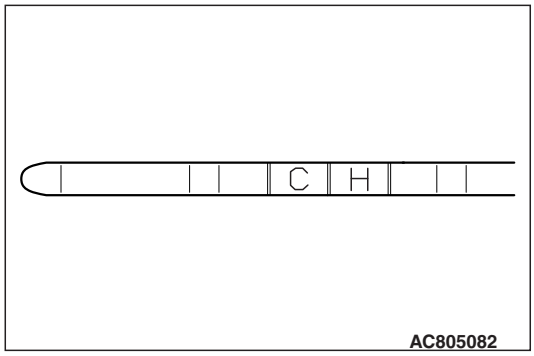

8. Drive the vehicle until the CVT fluid is warmed up to the normal operating temperature (70 to 80°C), and check the CVT fluid level. It must be within the "HOT" area on the oil level gauge.

   NOTE: The "COLD" level is for reference only. Use the "HOT" level as the criteria.

   NOTE: Use M.U.T.-III. to measure the CVT fluid temperature.

   NOTE:

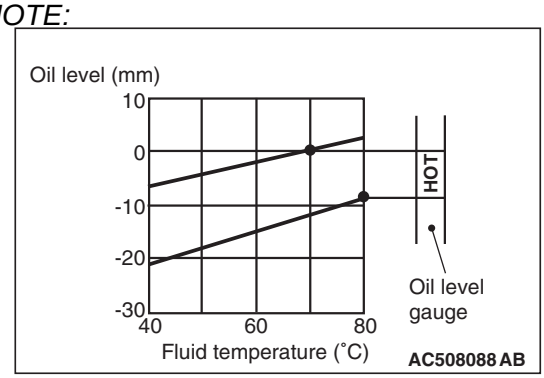

   When a certain amount of time is required to warm up the CVT fluid to the normal operating temperature (70 to 80℃), check the oil level referring to the characteristics chart.

9. Adjust the CVT fluid level to the specified level. Refill the CVT fluid when the fluid level is low, and drain the CVT fluid through the drain plug when the fluid level is high.
10. Securely insert the oil level gauge into the oil filler tube.
11. CVT-ECU records the deterioration level of the CVT fluid. After replacing the CVT fluid with new one, use M.U.T.-III to reset the deterioration level recorded in CVT-ECU.

<W6AJA>

If you have a A/T fluid changer, use this changer to replace the A/T fluid. If you do not have a A/T fluid changer, replace the A/T fluid by the following procedure.

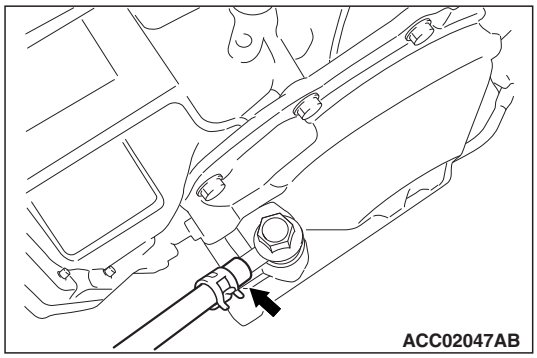

1. Disconnect the hose shown in the illustration which connects the transmission and the oil cooler (inside the radiator). Place a container under the hose to collect the discharge.

⚠ CAUTION

The engine should be stopped within one minute after it is started. If all the A/T fluid has drained out before then, the engine should be stopped at that point.

2. Start the engine and let the A/T fluid drain out.

   (Running conditions: "N" range with engine idling)

   Approximately 3.5 L of A/T fluid should be removed.

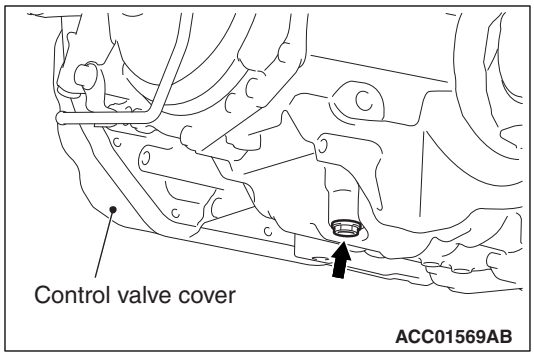

3. Remove the drain plug from the bottom of the transmission case to drain the A/T fluid.

   Approximately 2.0 L of A/T fluid should be removed.

4. Install the drain plug with a new gasket, and tighten it to the specified torque.

   Tightening torque: 7.4 ± 2.4 N·m

⚠ CAUTION

Stop pouring if the full volume of A/T fluid can not be added.

5. Add new A/T fluid (MITSUBISHI MOTORS GENUINE ATF - J3) through the oil filter tube.

   Approximately 5.5 L of A/T fluid should be added.

6. Repeat the procedure in Step 2. (to pump out the rest of the contaminated A/T fluid)
7. Add new A/T fluid (MITSUBISHI MOTORS GENUINE ATF - J3) through the oil filter tube.

   Approximately 3.5 L of A/T fluid should be added.

   NOTE: Check for contamination or a burnt odour. If the A/T fluid is still contaminated or burnt, repeat Steps 6 and 7 before proceeding to Step 8.

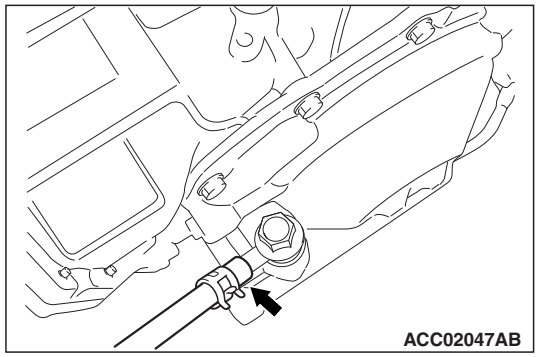

8. Reconnect the hose which was disconnected in step 1 above, and firmly insert the dipstick.
9. Start the engine and run it at idle for one to two minutes.
10. Move the selector lever through all positions, and then move it to the "N" position.

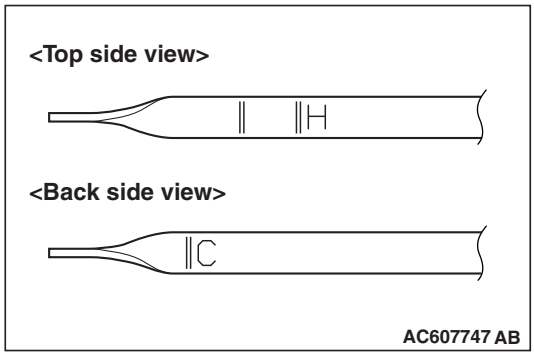

11. Check that the A/T fluid level is at the "C" mark on the dipstick. If the level is less than this, add A/T fluid.

12.Drive the vehicle until the A/T fluid temperature rises to the normal operating temperature (70 – 80°C), and then check the A/T fluid level again. The A/T fluid level must be at the "H" mark.

NOTE: The A/T fluid temperature is measured with M.U.T.-III MB991955 (M.U.T.-III sub assembly).

NOTE: The "C" level is for reference only; the "H" level should be regarded as the standard level.

NOTE:

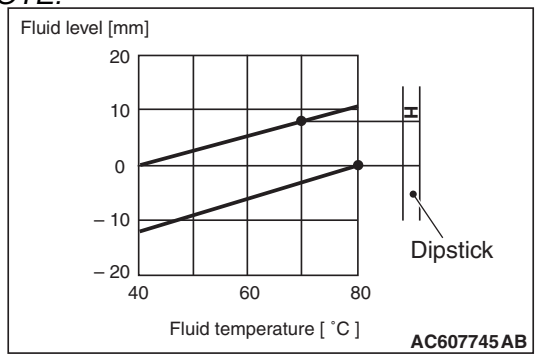

If it takes some amount of time until the A/T fluid reaches its normal operating temperature (70 – 80℃), check the A/T fluid level by referring to the left diagram.

13.When the A/T fluid is less than the specified level, add A/T fluid.

When the A/T fluid is greater than the specified level, drain the excess fluid through the drain plug to adjust the A/T fluid to the specified level.

14.Firmly insert the dipstick into the oil filler tube.

E3. CHANGE ENGINE OIL

M6020600301889

<4B1, 4J1>

1. Start the engine and allow it to warm up until the temperature of the coolant reaches 80 °C to 90 °C.

⚠ WARNING

Use care as engine oil could be hot.

2. Remove the engine oil filler cap.
3. Remove the engine oil pan drain plug to drain engine oil.
4. Install a new engine oil pan drain plug gasket and then tighten the engine oil pan drain plug to the specified torque.

Tightening torque: 39 ± 5 N·m

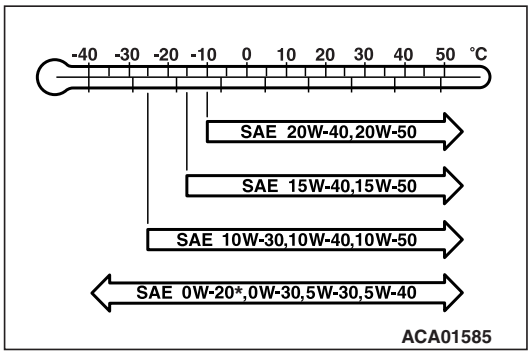

5. Refill with specified quantity of engine oil.

Specified engine oil:
- **ACEA classification: A1/B1, A3/B3, A3/B4 or A5/B5**
- **ILSAC classification: ILSAC certificated oil**
- **API classification: SM or higher**

Total quantity (Includes volume inside engine oil filter and engine oil cooler):
- **<4B11-Except PHEV, 4J11>**
  - **<Vehicles without engine oil cooler> 4.3 L**
  - **<Vehicles with engine oil cooler> 4.4 L**
- **<4B11-PHEV, 4B12, 4J12>**
  - **<Vehicles without engine oil cooler> 4.6 L**
  - **<Vehicles with engine oil cooler> 4.7 L**

NOTE: SAE 0W-20, 0W-30, 5W-30, and 5W-40 engine oils can only be used if they meet ACEA A3/B3, A3/B4 or A5/B5 and API SM or higher specifications.*

*NOTE: *: Vehicles to comply with the Euro 4 regulation*

6. Install the engine oil filler cap.
7. Let the engine run for a few minutes.
8. Stop the engine, and then check the engine oil level using the engine oil level gauge after a few minutes.

<4N1>

1. Start the engine and allow it to warm up until the temperature of the engine coolant reaches 80°C to 90°C.

⚠ WARNING

Use care as engine oil could be hot.

2. Remove the engine oil filler cap.
3. Remove the engine room under cover front.
4. Remove the engine oil pan drain plug to drain engine oil.

5. Install a new engine oil pan drain plug gasket and then tighten the engine oil pan drain plug to the specified torque.

   Tightening torque: 39 ± 5 N·m

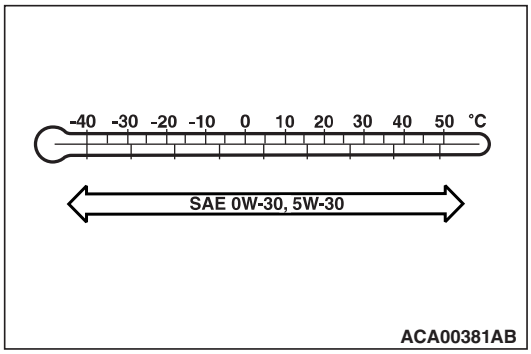

6. Refill with specified quantity of engine oil.

   Specified Engine Oil
   - **ACEA classification: "For service C1, C2, C3 or C4"**
   - **JASO classification: "For service DL-1"**

   Total quantity (Includes volume inside engine oil filter and engine oil cooler):
   - **<Vehicles without engine oil cooler> 7.4 L**
   - **<Vehicles with engine oil cooler> 7.5 L**

7. Install the engine oil filler cap.
8. Let the engine run for a few minutes.
9. Stop the engine, and then check the engine oil level using the engine oil level gauge after a few minutes.
10. Install the engine room under cover front.

E4. REPLACE ENGINE OIL FILTER

M6020600401284

1. Remove the engine oil pan drain plug to drain engine oil.

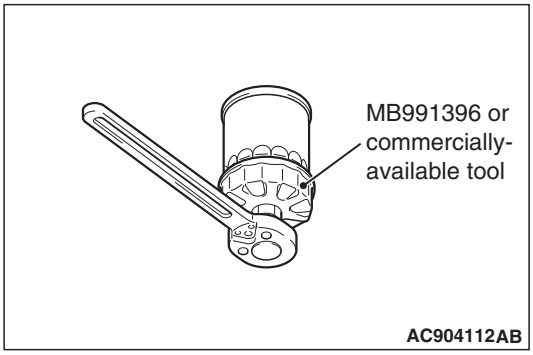

2. Use special tool oil filter wrench (MB991396) or commercially-available tool to remove the engine oil filter.
3. Clean the engine oil filter installing surface on the cylinder block side.

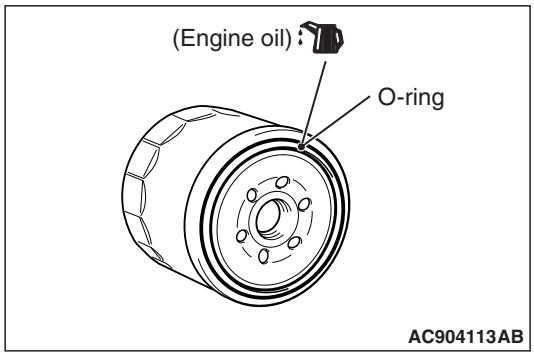

4. Apply a small amount of engine oil to the new engine oil filter O-ring.
5. Tighten the engine oil filter until the O-ring contacts with the installation surface.

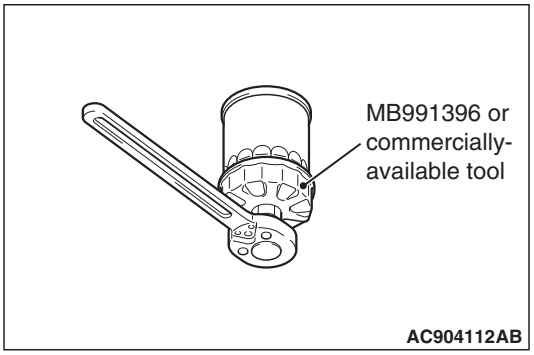

6. In the same manner as removal, use special tool oil filter wrench (MB991396) or commercially-available tool to tighten the engine oil filter to the specified torque.

   Tightening torque: Approximately 1 turn (14 ± 2 N·m)

7. Install the engine oil pan drain plug and refill the engine oil.
8. Rev the engine a few times, and check to be sure that no engine oil leaks from the installation section of the engine oil filter.
9. Install the engine room under cover front.

E5. CHECK EXHAUST GAS RECIRCULATION (EGR) SYSTEM

M6020600801044

CHECKING THE OPERATION SOUND

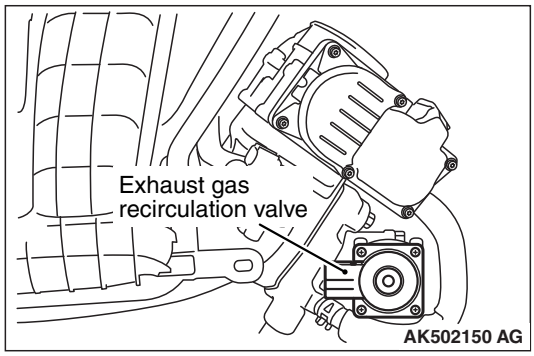

1. Check that the operation sound of the stepper motor can be heard from the exhaust gas recirculation valve when the power supply mode of the electric motor switch is ACC.
2. If the operation sound cannot be heard, inspect the drive circuit of the stepper motor.

NOTE: If the circuit is normal, either the stepper motor or the engine-ECU may have failed.

CHECKING THE COIL RESISTANCE

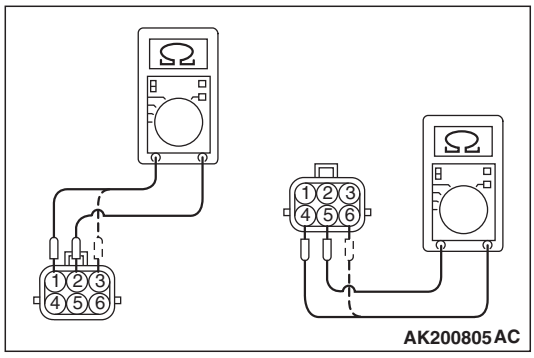

1. Disconnect the exhaust gas recirculation valve connector.
2. Measure the resistance between terminal No. 2 and either terminal No. 1 or terminal No. 3 of the connector at the exhaust gas recirculation valve.

   Standard value: 20 – 24 Ω (at 20°C)
3. Measure the resistance between terminal No. 5 and either terminal No. 4 or terminal No. 6 of the connector at the exhaust gas recirculation valve.

   Standard value: 20 – 24 Ω (at 20°C)
4. If the value deviates from the standard value, replace the exhaust gas recirculation valve.

OPERATION CHECK

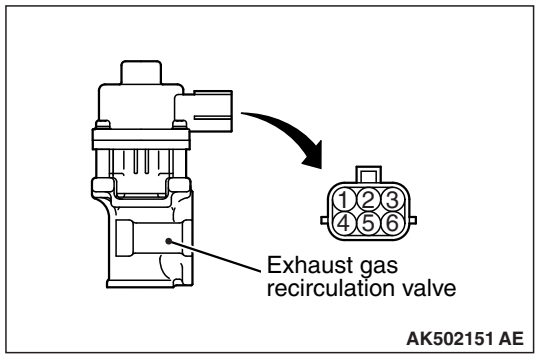

1. Remove the exhaust gas recirculation valve.
2. Attach a special tool test harness (MB991658) to the connector at the exhaust gas recirculation valve.

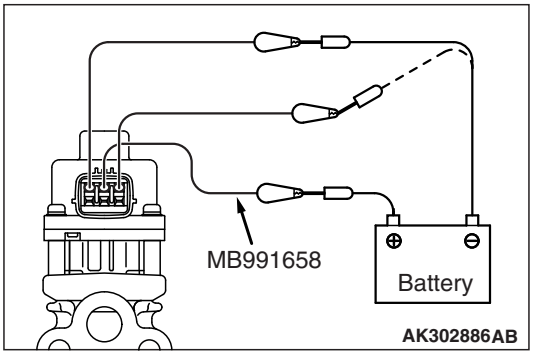

⚠ CAUTION

Connecting battery voltage to the exhaust gas recirculation valve for a long term could damage the coil.

3. Connect the positive (+) terminal of the battery to terminal No. 2.
4. Connect terminals No. 1 and No. 3 to the negative (–) terminal of the battery, in order to test whether the stepper motor vibrates (with a slight shudder), indicating that the stepper motor is operating.

⚠ CAUTION
Connecting battery voltage to the exhaust gas recirculation valve for a long term could damage the coil.

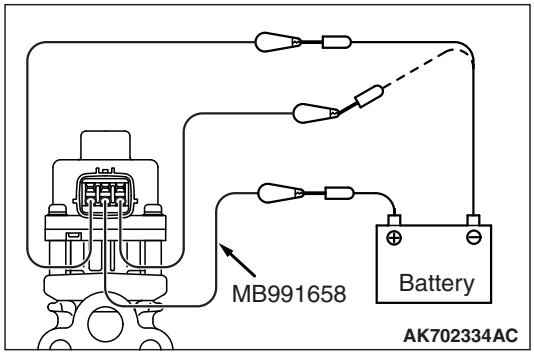

5. Connect the positive (+) terminal of the battery to terminal No. 5.
6. Connect terminals No. 4 and No. 6 to the negative (–) terminal of the battery, in order to test whether the stepper motor vibrates (with a slight shudder), indicating that the stepper motor is operating.
7. If a vibration can be felt during the test, the stepper motor is normal.
8. Using a new gasket, install the exhaust gas recirculation valve by tightening its mounting bolts to the specified torque.

Tightening Torque:
24 ± 3 N·m

E6. CHECK ENGINE IDLING SPEED

M6020601300812

<4B1>

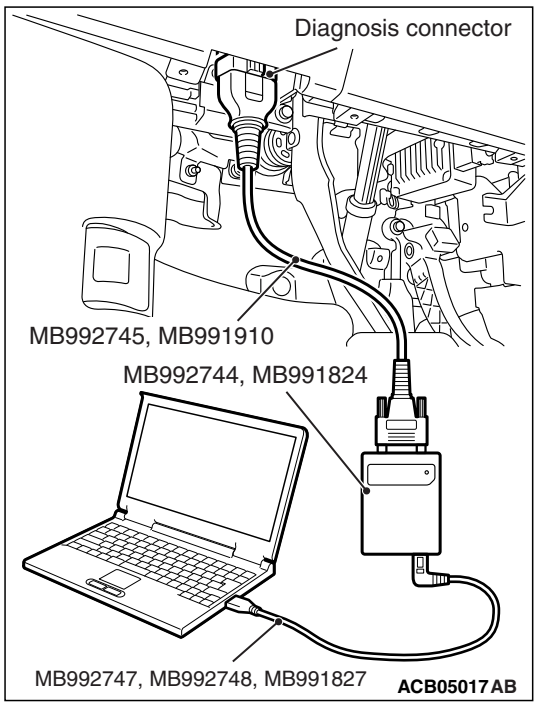

1. Before inspection, set the vehicle to the pre-inspection condition.
2. Turn the ignition switch to "LOCK" (OFF) position.
3. Connect the M.U.T.-III to the diagnosis connector.

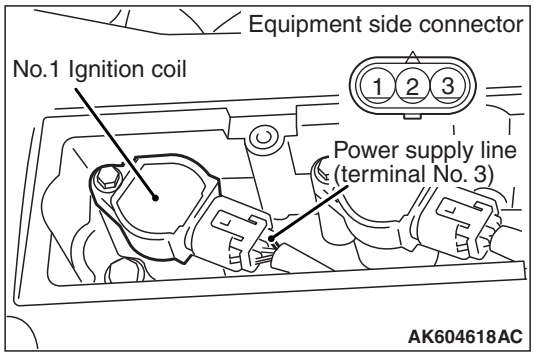

4. Set the timing light to the power supply line (terminal No. 3) of the ignition coil No. 1.
5. Start the engine and let it run at idle.
6. Check that ignition timing is at the standard value.

Standard value: approximately 10° BTDC

NOTE:
- *The ignition timing may fluctuate within ±7°. This is normal.*
- *In higher altitude, the ignition timing is more advanced than the standard value by approximately 5°.*
- *Wait till approximately 1 minute passes after the engine started, and check the ignition timing when the engine stabilized.*

7. Check the idle speed.

Standard value:
650 ± 100 r/min <4B11>
750 ± 100 r/min <4B12>

NOTE:
- *The idle speed is controlled automatically by the idle speed control system.*
- *When using the M.U.T.-III, select item No. 2 and take a reading of the idle speed.*

8. If the idle speed is outside the standard value, inspect the MPI system.
9. Remove the timing light.
10. Turn the ignition switch to the "LOCK" (OFF) position and then disconnect the M.U.T.-III.

<4J1>

1. Before inspection, set the vehicle to the pre-inspection condition.
2. Turn the ignition switch to the "LOCK" (OFF) position and then connect the M.U.T.-III to the diagnosis connector.

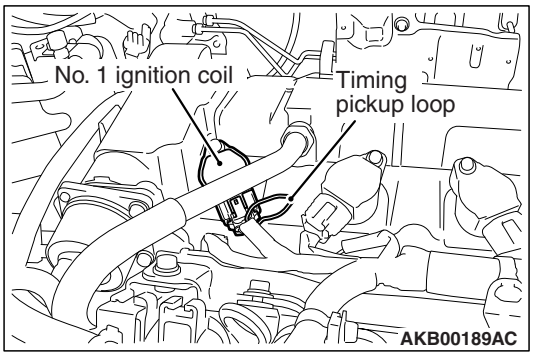

3. Set a timing light to the power supply line (terminal No. 3) of the ignition coil No. 1.

   NOTE: The power supply line is looped and also longer than the other ones.
4. Start the engine and let it run at idle.
5. Check that ignition timing is at the standard value.

   Standard value: approximately 10° BTDC

   NOTE:
   - *The ignition timing may fluctuate within ±7°. This is normal.*
   - *In higher altitude, the ignition timing is more advanced than the standard value by approximately 5°.*
   - *Wait till approximately 1 minute passes after the engine started, and check the ignition timing when the engine stabilized.*
6. Check the idle speed.

   Standard value: 650 ± 100 r/min

   NOTE:
   - *The idle speed is controlled automatically by the idle speed control system.*
   - *When using the M.U.T.-III, select engine data list item No. 2 and take a reading of the idle speed.*
7. If the idle speed is outside the standard value, inspect the MPI system.
8. Remove the timing light.
9. Turn the ignition switch to "LOCK" (OFF) position and then disconnect the M.U.T-III.

E7. CHECK CO CONCENTRATION

M6020601000952

<4B1>

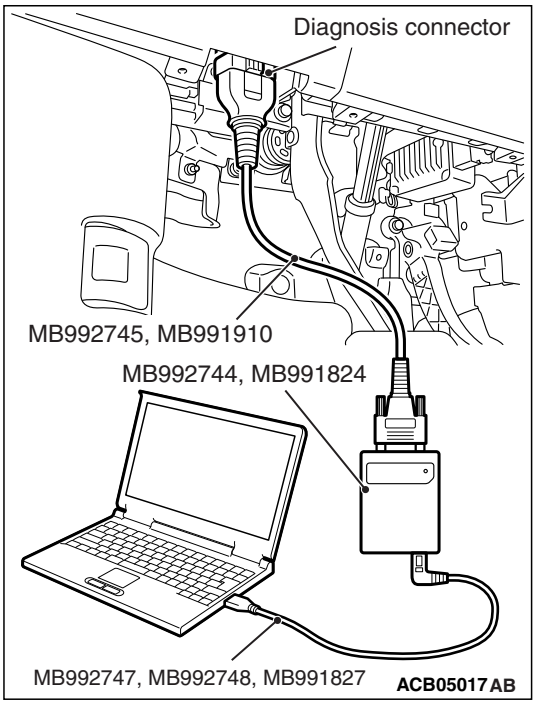

1. Before inspection, set the vehicle to the pre-inspection condition.
2. Turn the ignition switch to "LOCK" (OFF) position.
3. Connect the M.U.T.-III to the diagnosis connector.

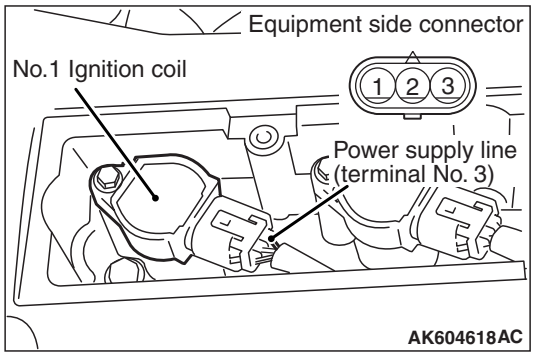

4. Set the timing light to the power supply line (terminal No. 3) of the ignition coil No. 1.
5. Start the engine and let it run at idle.
6. Check that ignition timing is at the standard value.

   Standard value: approximately 10° BTDC

NOTE:
- *The ignition timing may fluctuate within ±7°. This is normal.*
- *In higher altitude, the ignition timing is more advanced than the standard value by approximately 5°.*
- *Wait till approximately 1 minute passes after the engine started, and check the ignition timing when the engine stabilized.*

7. Run the engine at 2,000 – 3,000 r/min for 2 minutes.
8. Set the CO, HC tester.
9. Check the CO contents and the HC contents at idle.

   Standard value
   CO contents: 0.3 % or less
   HC contents: 200 ppm or less

10. If there is a deviation from the standard value, inspect the MPI system.
11. Remove the HC, CO tester and timing light.
12. Turn the ignition switch to the "LOCK" (OFF) position and then disconnect the M.U.T-III.

<4J1>

1. Before inspection, set the vehicle to the pre-inspection condition.
2. Turn the ignition switch to the "LOCK" (OFF) position and then connect the M.U.T.-III to the diagnosis connector.

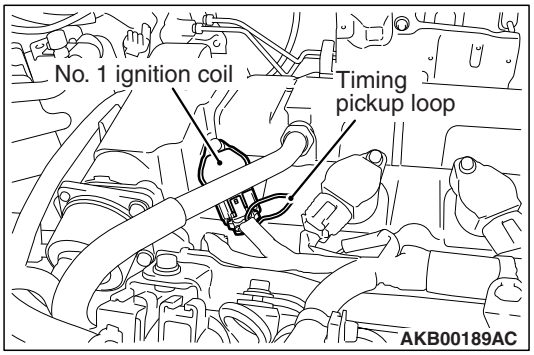

3. Set a timing light to the power supply line (terminal No. 3) of the ignition coil No. 1.

   NOTE: The power supply line is looped and also longer than the other ones.

4. Start the engine and let it run at idle.
5. Check that ignition timing is at the standard value.

   Standard value: approximately 10° BTDC

   NOTE:
   - *The ignition timing may fluctuate within ±7°. This is normal.*
   - *In higher altitude, the ignition timing is more advanced than the standard value by approximately 5°.*
   - *Wait till approximately 1 minute passes after the engine started, and check the ignition timing when the engine stabilized.*

6. Run the engine at 2,000 – 3,000 r/min for 2 minutes.
7. Set the CO, HC tester.
8. Check the CO contents and the HC contents at idle.

   Standard value
   CO contents: 0.3 % or less
   HC contents: 200 ppm or less

9. If there is a deviation from the standard value, inspect the MPI system.
10. Remove the timing light and CO, HC tester.
11. Turn the ignition switch to "LOCK" (OFF) position and then disconnect the M.U.T.-III.

OTHERS

F1. CHECK BODY CONDITION FOR DAMAGE

M6020700100210

1. Check underbody coating for damage.
2. Check body painting for damage.

F2. CHECK THE COMMON RAIL ENGINE (SMALL INJECTION QUANTITY LEARNING)

M6020700400192

LEARNING PROCEDURE

⚠ CAUTION

To prevent damage to M.U.T.-III, always turn the ignition switch to the "LOCK" (OFF) position before connecting or disconnecting M.U.T.-III.

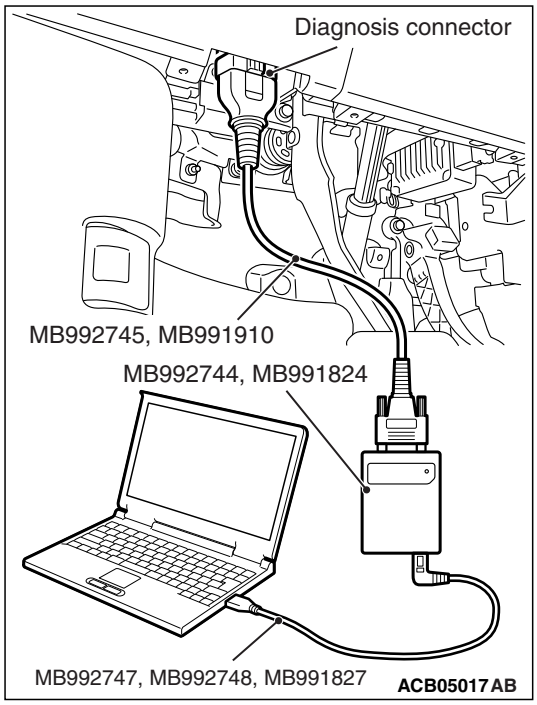

1. After the ignition switch is in "LOCK" (OFF) position, connect the M.U.T.-III to the diagnosis connector.
2. Put the vehicle in the following idling stable conditions:
   - Engine coolant temperature: 76 – 100°C
   - Fuel temperature: 30 – 100°C
   - Intake air temperature: –30 to 100°C
   - Barometric pressure: 70 kPa or more
   - Lamps, radiator fan and all accessories: OFF
   - Transmission: Neutral
   - Power steering: Static state
3. Select "MPI/GDI/DIESEL" from System select Screen of the M.U.T.-III.
4. Select "Special Function" from MPI/GDI/DIESEL Screen.
5. Select "Learning" from Special Function Screen.
6. Select Item No. 1 "Small Injection qt. Learning" from the Learning Screen to execute learning.

⚠ CAUTION

If the vehicle conditions go out of the learning conditions during idling, learning is interrupted.

To reexecute learning, the ignition switch must once be turned off.

7. Continue idling for about 3 minutes before learning is completed.
8. Confirm that the engine warning lamp is off. If it still blinks, reexecute learning.

F3. ROAD TEST

M6020700200756

Drive the vehicle and check for conditions.

1. Check free play of steering wheel.
2. Check efficiency of service brakes and parking brakes system.
3. Check driveability of engine/motor.
4. Check condition of instruments, gauges indicators, exterior lamps, heater and ventilators.
5. Check abnormal noise of each part.
6. Check the tyres for wear and for the correct air pressure.

NOTES