SERVICE BULLETIN

MITSUBISHI MOTORS

GLOBAL AFTER SALES OFFICE, MITSUBISHI MOTORS CORPORATION

PURPOSE : CHANGE	ISSUE NO. : MSB-14EXL00-002	DATE : 2014-03-03
SUBJECT : EARTH CONNECTOR “G04"		<DESTINATION/MODEL> (EUR/NZ/MMAL) <M/Y> 12-14
GROUP : GENERAL(Gr:00)		i-MiEV(HA3W)

1. Description :

Please refer to the attached document for the information about the change of mention in the applicable service manual. (The earth connector “G04” is abolished)

2. Affected service manuals :

For EUR

Applicable manual	Pub. No.	Applicable title (INFO ID)	Content
2012 i-MiEV Workshop Manual	ENG: CHAE12E1-CD FRE: CHAF12E1-CD GER: CHAG12E1-CD SPA: CHAS12E1-CD ITA: CHAI12E1-CD	UNDER FLOOR AND ELECTRIC MOTOR UNIT ROOM <HIGH VOLTAGE (330V)> (M801-00-420-04100-01)	Attached sheet 5
		REGULAR CHARGING CONTROL SYSTEM (M901-03-670-01900-01)	Attached sheet 6
		CODE No. P1B29: REGULAR CHARGING CONNECTION SIGNAL, SHORT TO POWER SUPPLY (M549-21-770-01400-01)	Attached sheet 7
2014 i-MiEV Workshop Manual	ENG: CHAE14E1-CD FRE: CHAF14E1-CD GER: CHAG14E1-CD SPA: CHAS14E1-CD ITA: CHAI14E1-CD	UNDER FLOOR AND ELECTRIC MOTOR UNIT ROOM <HIGH VOLTAGE (330V)> (M801-00-420-08500-01)	Attached sheet 5
		REGULAR CHARGING CONTROL SYSTEM (M901-03-670-06400-01)	Attached sheet 6
		CODE No. P1B29: REGULAR CHARGING CONNECTION SIGNAL, SHORT TO POWER SUPPLY (M549-21-770-04700-01)	Attached sheet 7

For MMAL and NZ

Applicable manual	Pub. No.	Applicable title (INFO ID)	Content
2013.5 i-MiEV Workshop Manual	AU900414 NZ:DRAFT	UNDER FLOOR AND ELECTRIC MOTOR UNIT ROOM <HIGH VOLTAGE (330V)> (M801-00-420-09600-01)	Attached sheet 5
		REGULAR CHARGING CONTROL SYSTEM (M901-03-670-07500-01)	Attached sheet 6

3. About the details :

Please refer to the attached document (Attached sheet 5-7)

4. Effective time : From the vehicle produced from early April, 2012

Attached sheet 5

UNDER FLOOR AND ELECTRIC MOTOR UNIT ROOM <HIGH VOLTAGE (330V)>

Connector symbol
G

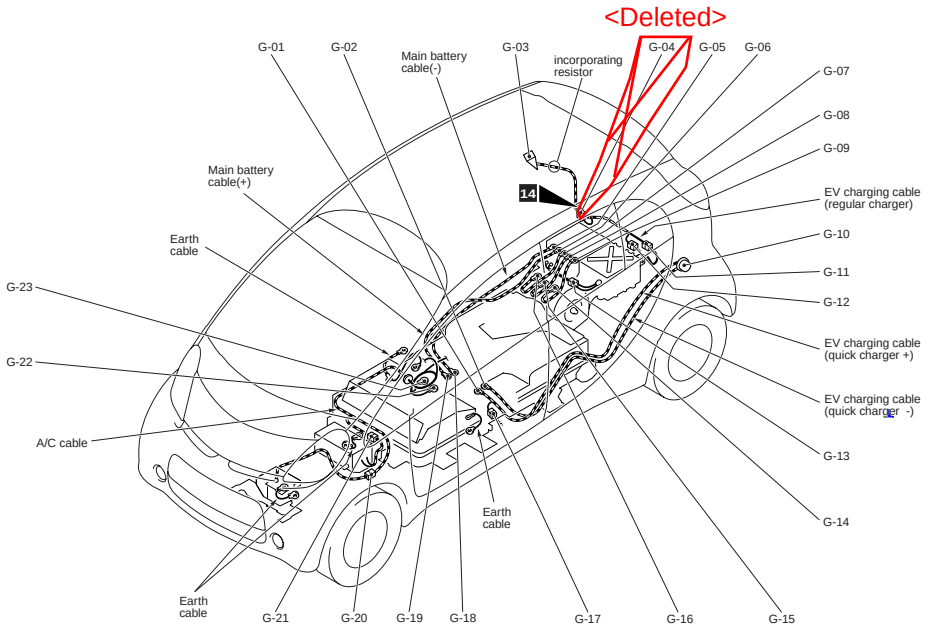

ACA04016AB

Connector colour code
B: Black
BR: Brown
G: Green
GR: Grey
L: Blue
None: Milk white
O: Orange
R: Red
V: Violet
Y: Yellow

G-01	(1)	Main battery and EV charging cable (quick charger +) combination
G-02	(1)	Main battery and EV charging cable (quick charger (–) combination
G-03	(5-B)	Regular charging connection
~~G-04~~	~~(6-GR)~~	~~Earth No.14~~ <Deleted>
G-05	(1)	Inverter (– terminal)
G-06	(1)	Inverter (+ terminal)
G-07	(1)	Inverter (Terminal U)
G-08	(1)	Inverter (Terminal V)
G-09	(1)	Inverter (Terminal W)
G-10	(10-B)	Quick charging connection
G-11	(5-B)	On board charger / DC-DC converter
G-12	(4-GR)	Control wiring harness and EV charging cable (regular charger) combination
G-13	(2-O)	Inverter and on board charger/DC-DC converter combination
G-14	(1)	Electric motor unit (Terminal W)
G-15	(1)	Electric motor unit (Terminal V)
G-16	(1)	Electric motor unit (Terminal U)
G-17	(8-GR)	Control wiring harness and EV charging cable (quick charger +) combination
G-18	(1)	Main battery and Main battery cable (–) combination
G-19	(1)	Main battery and Main battery cable (+) combination
G-20	(2-O)	A/C compressor
G-21	(2-O)	Heater
G-22	(1)	Main battery and A/C cable (+ terminal for A/C compressor) combination
G-23	(1)	Main battery and A/C cable (+ terminal for heater) combination

NOTE:

1. *Do not remove the A/C cable from the main battery.*
2. *The high voltage cables (excluding the earth cable) colour is orange.*

Attached sheet 6 (1/2)

REGULAR CHARGING CONTROL SYSTEM

<New> Insert the attached sheet 6 (2/2)

<Old>

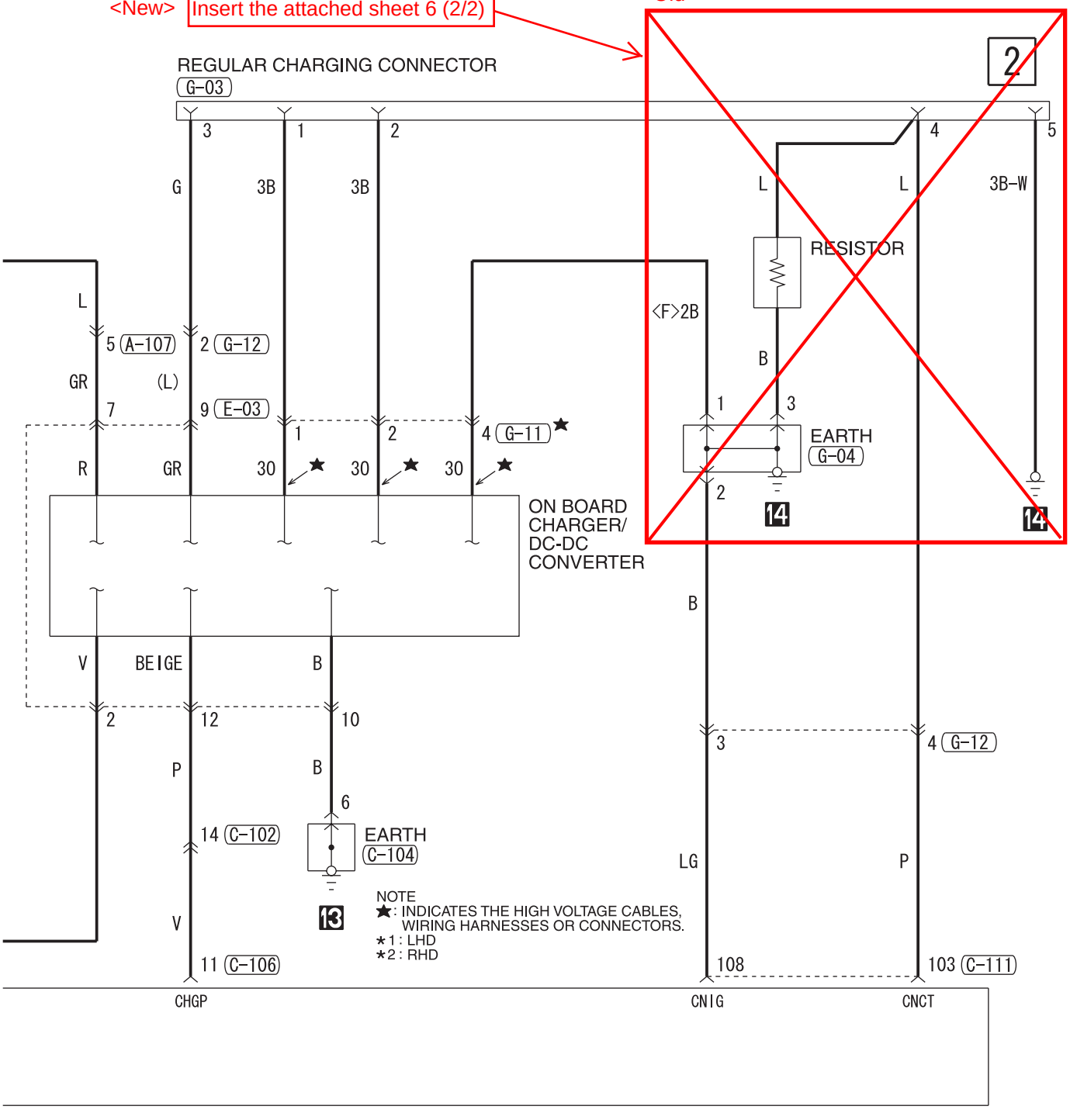

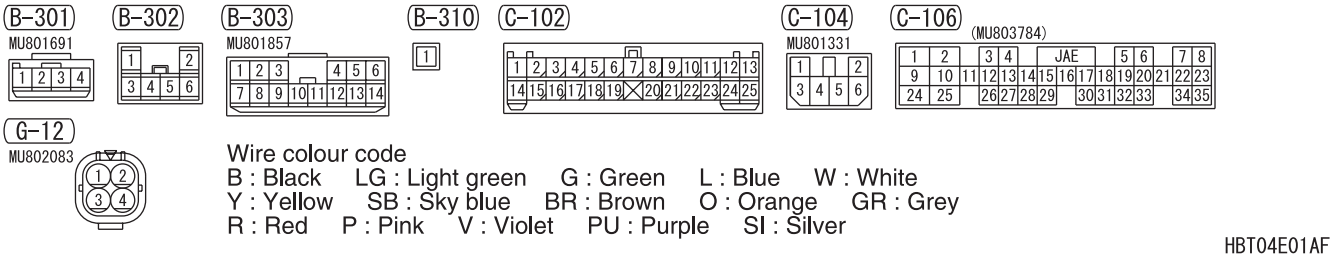

Wire colour code

B : Black LG : Light green G : Green L : Blue W : White
Y : Yellow SB : Sky blue BR : Brown O : Orange GR : Grey
R : Red P : Pink V : Violet PU : Purple SI : Silver

HBT04E01AF

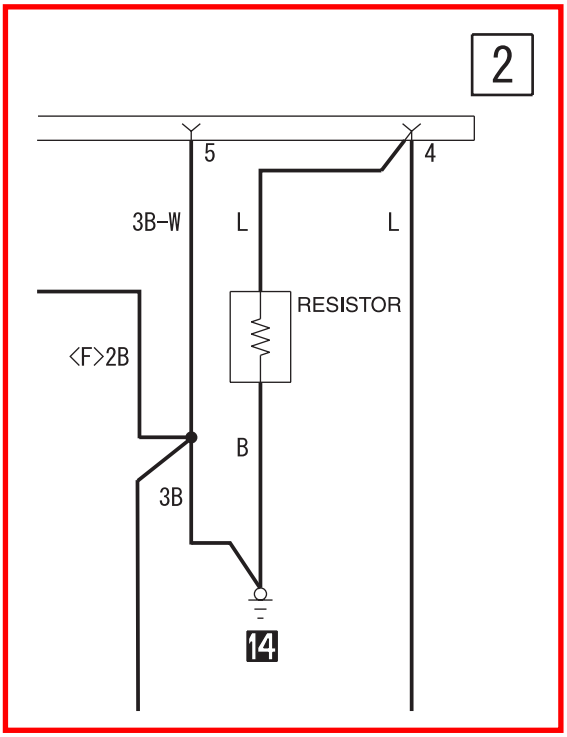
2
5
4
3B-W
L
L
RESISTOR
<F>2B
B
3B
14

Attached sheet 7 (1/2)

Code No. P1B29: Regular charging connection signal, short to power supply

REGULAR CHARGING CONTROL SYSTEM CIRCUIT

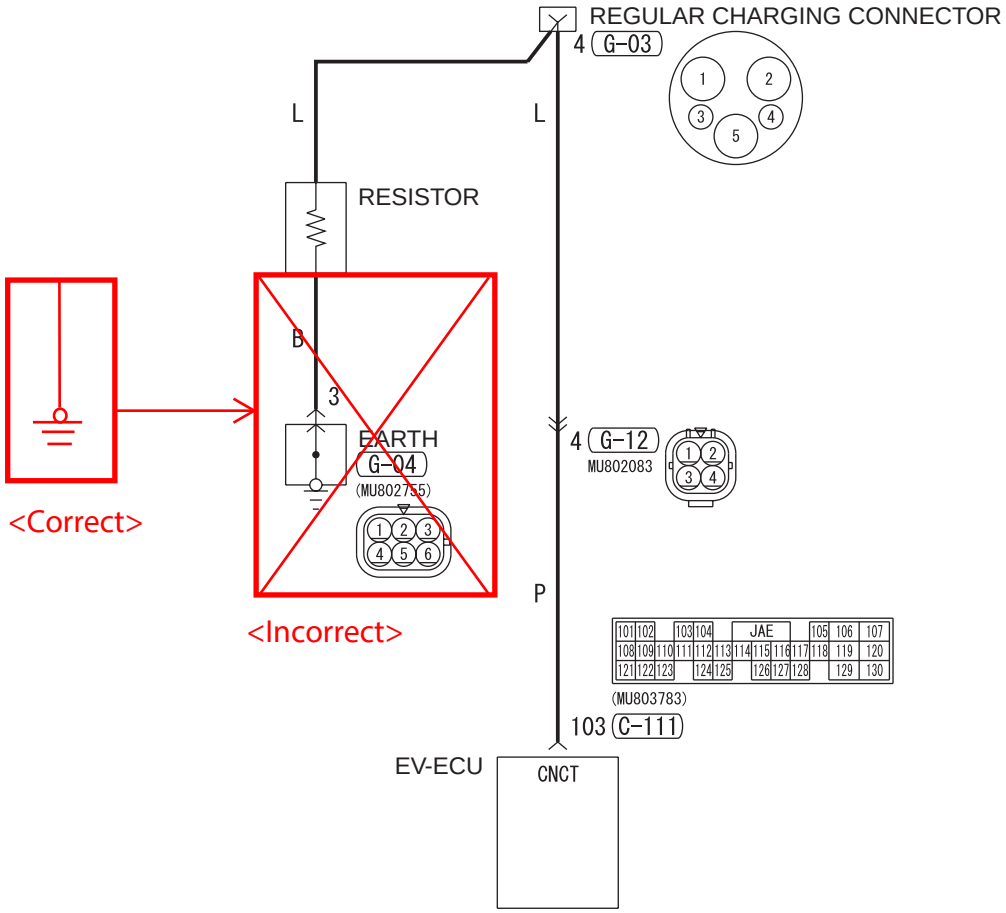

Wire colour code
B : Black LG : Light green G : Green L : Blue W : White Y : Yellow SB : Sky blue
BR : Brown O : Orange GR : Grey R : Red P : Pink V : Violet PU : Purple SI : Silver

ACA03502

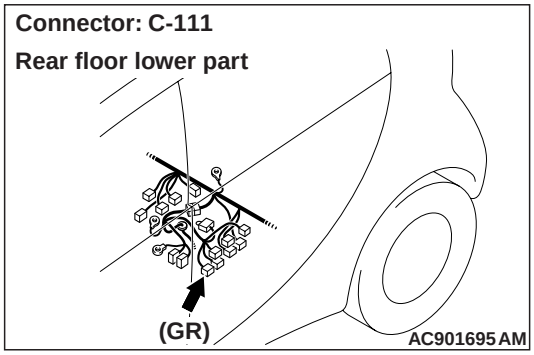

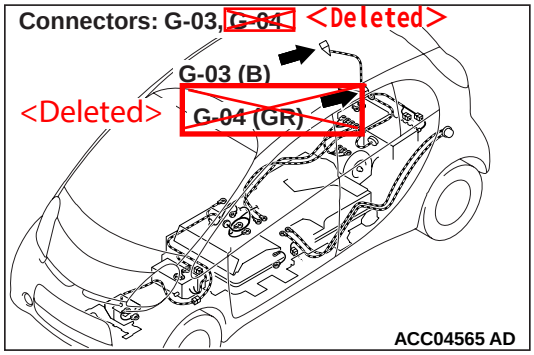

OPERATION

- The EV-ECU judges whether or not the charging cable is connected from the regular charging connection signal voltage.

DIAGNOSIS CODE SET CONDITIONS

- When the regular charging connection signal voltage of 4.83 V or more continues for 5 seconds or longer, the diagnosis code No. P1B29 will be set. <Incorrect>

PROBABLE CAUSES

- Damaged wiring harness or connector(s)
- Malfunction of the EV-ECU

DIAGNOSIS PROCEDURE

STEP 1. Measure the resistance at C-111 EV-ECU connector.

Check the signal lines for short to power supply. Do not connect the charging cable.

(1) C-111 Disconnect the EV-ECU connector, and measure the resistance at the wiring harness side.

(2) Measure the resistance between the C-111 EV-ECU connector terminal No. 103 and the body earth.

OK: 2,430 – 2,970Ω (at 20°C)

Q: Is the check result normal?

YES : Go to Step 4.

NO : Go to Step 2.

STEP 2. Connector check: G-03 quick charger plug connector, C-111 EV-ECU connector ~~G-04 earth connector~~ <Deleted>

Q: Is the check result normal?

YES : Go to Step 3.

NO : Repair the damaged connector.

STEP 3. Check the wiring harness between C-111 EV-ECU connector terminal No. 103 and G-03 on board charger plug connector terminal No. 4 and ~~G-04 earth.~~ body earth. <Correct>

Check the signal lines for short to power supply.

Q: Is the check result normal?

YES : Go to Step 4.

NO : Repair the wiring harness.

STEP 4. Diagnosis code recheck

Check again if the diagnosis code is set to the EV-ECU.

(1) Erase the stored diagnosis code.

(2) Connect the regular charging cable.

(3) Check if the diagnosis code is set.

Q: Is the diagnosis code set?

YES : Replace the EV-ECU. Then go to Step 5.

NO : Intermittent malfunction (Refer to GROUP 00 – How to Use Troubleshooting/ Inspection Service Points - How to Cope with Intermittent Malfunction .)

STEP 5. Diagnosis code recheck

Check again if the diagnosis code is set to the EV-ECU.

(1) Erase the stored diagnosis code.

(2) Connect the regular charging cable.

(3) Check if the diagnosis code is set.

Q: Is the diagnosis code set?

YES : Return to Step 1.

NO : The diagnosis is complete.