SERVICE BULLETIN

MITSUBISHI MOTORS

GLOBAL AFTER SALES OFFICE, MITSUBISHI MOTORS CORPORATION

PURPOSE : CHANGE	ISSUE NO. : MSB-14EXL00_54-001	DATE : 2014-08-25
SUBJECT : HIGH-VOLTAGE SHUT-OFF SYSTEM		<DESTINATION/MODEL> (EUR/MMAL/NZ) <M/Y> 13.5-14.5
GROUP : Gr:00(GENERAL)/Gr:54B(CHASSIS ELECTRICA)		OUTLANDER/OUTLANDER PHEV(GF0W)/i-MiEV(HA3W)

1. Description :

Please refer to the attached document for the information about the change of mention in the applicable service manual.(Group 52B regarding the post-collision diagnosis has been added in the “PRECAUTIONS ON HOW TO USE THE HIGH-VOLTAGE VEHICLE)

2. Affected service manuals :

Please refer to the attached document (Attached sheet 1)

3. About the details :

Please refer to the attached document (Attached sheet 5-7)

Attached sheet 1

FOR EUR

Applicable manual	Pub.No	Applicable title(Info-ID)	Content
2014 OUTLANDER/ OUTLANDER PHEV Workshop Manual	CGFE14E2-CD(English) CGFF14E2-CD(French) CGFG14E2-CD(German) CGFS14E2-CD(Spanish) CGFI14E2-CD(Italian)	PRECAUTIONS ON HOW TO USE THE HIGH-VOLTAGE VEHICLE (M001-01-880-10300-01), (M549-30-660-09800-01)	Attached sheet 5
2014.5 OUTLANDER/ OUTLANDER PHEV Workshop Manual	CGFE14E3-CD(English) CGFF14E3-CD(French) CGFG14E3-CD(German) CGFS14E3-CD(Spanish) CGFI14E3-CD(Italian)	PRECAUTIONS ON HOW TO USE THE HIGH-VOLTAGE VEHICLE (M001-01-880-10300-01), (M549-30-660-09800-01)	

FOR AUSTRALIA, NEW ZEALAND

Applicable manual	Pub.No	Applicable title(Info-ID)	Contents
2014 OUTLANDER/ OUTLANDER PHEV Workshop Manual	AU900408 (AUSTRALIA), DRAFT(NEW ZEALAND)	PRECAUTIONS ON HOW TO USE THE HIGH-VOLTAGE VEHICLE (M001-01-880-12500-01), (M549-30-660-13900-01)	Attached sheet 6
2013.5 i-MiEV Workshop Manual	AU900414 (AUSTRALIA), DRAFT(NEW ZEALAND)	PRECAUTIONS ON HOW TO USE THE HIGH-VOLTAGE VEHICLE (M001-01-880-06200-01), (M549-30-660-06500-01)	Attached sheet 7

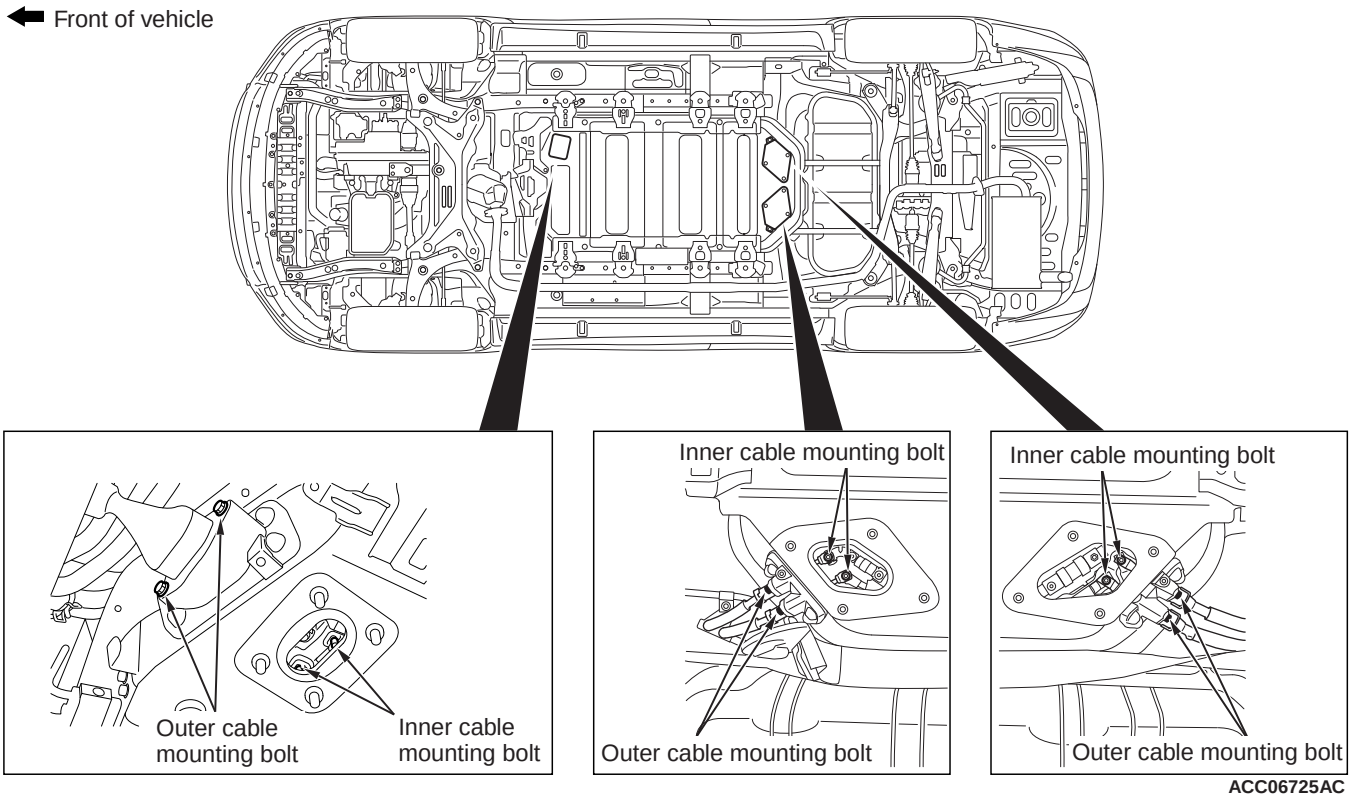

2. Remove the six inner cable mounting bolts.
3. Remove the six outer cable mounting bolts.
4. Pull out the drive battery cable <front and rear> and the EV charger cable (quick charging) from the drive battery.

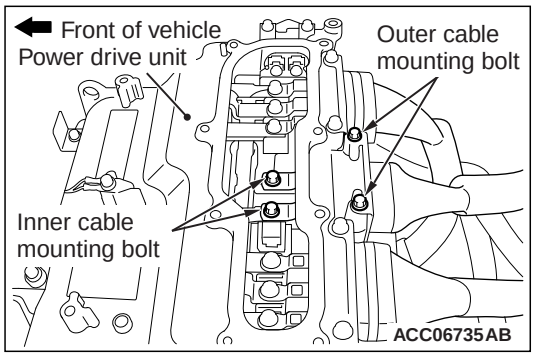

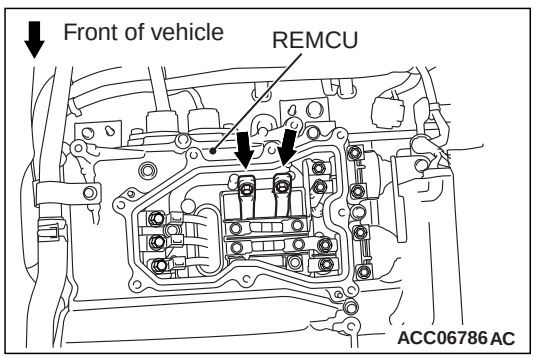

5. If steps 1 to 4 are difficult to perform or it is necessary to carry out any service work in the engine compartment or the electric motor unit compartment, disconnect the drive battery cable at the FPDU and the RMCU side (Refer to <FPDU> and <RMCU>).

ACTION WHEN HIGH-VOLTAGE SHUT-OFF SYSTEM IS OPERATED

A high-voltage shut-off system isolates high voltage in the event of a crash. When this system operates, diagnose the post-collision vehicles. After the diagnosis, also erase the PHEV-ECU related diagnosis code.

<Added>
(Refer to GROUP 52B - Post-collision Diagnosis)

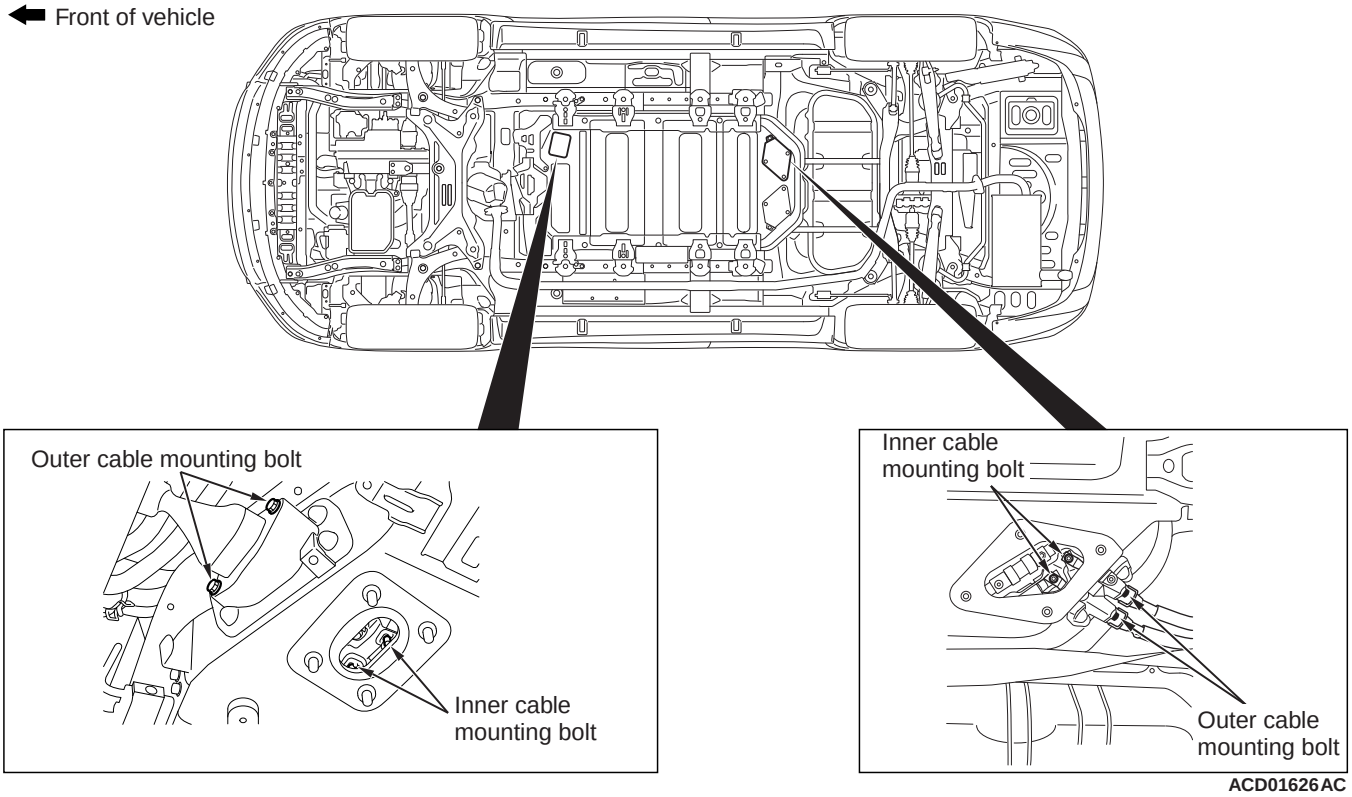

2. Remove the six inner cable mounting bolts.
3. Remove the six outer cable mounting bolts.
4. Pull out the drive battery cable (front and rear) and the EV charger cable from the drive battery.

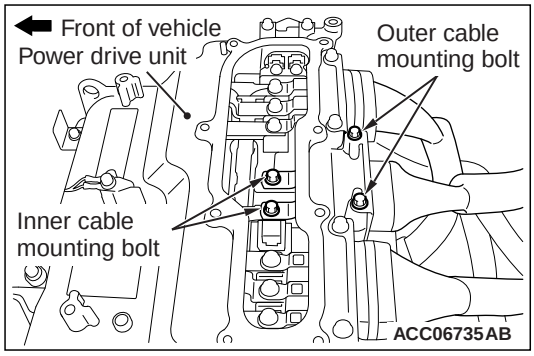

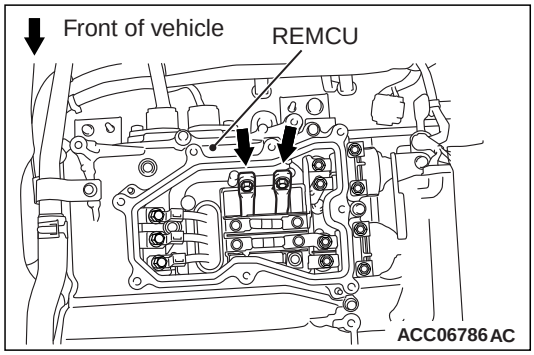

5. If steps 1 to 4 are difficult to perform or it is necessary to carry out any service work in the engine compartment or the electric motor unit compartment, disconnect the drive battery cable at the power drive unit and the REMCU side (Refer to <power drive unit> and <REMCU>).

ACTION WHEN HIGH-VOLTAGE SHUT-OFF SYSTEM IS OPERATED

A high-voltage shut-off system isolates high voltage in the event of a crash. When this system operates, diagnose the post-collision vehicles. After the diagnosis, also erase the PHEV-ECU related diagnosis code.

<Added>
(Refer to GROUP 52B - Post-collision Diagnosis)

Attached sheet 7

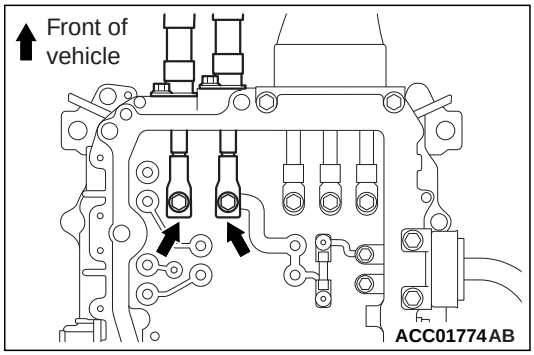

2. When the work No. 1 is difficult or when the maintenance work of the electric motor unit room must be necessarily performed, remove the traction battery cable of the inverter.

ACTION WHEN HIGH-VOLTAGE SHUT-OFF SYSTEM IS OPERATED

To prevent an electric shock during a collision, the system which shuts off the high voltage is adopted. When this system operates, diagnose the post-collision vehicles. After the diagnosis, erase the diagnosis code of EV-ECU.

HIGH-VOLTAGE CONNECTOR REMOVAL STEPS

⚠ DANGER

When adjusting the high-voltage parts, remove the service plug.

⚠ DANGER

When the lock of the connector is damaged, be sure to replace the wiring harness assembly.

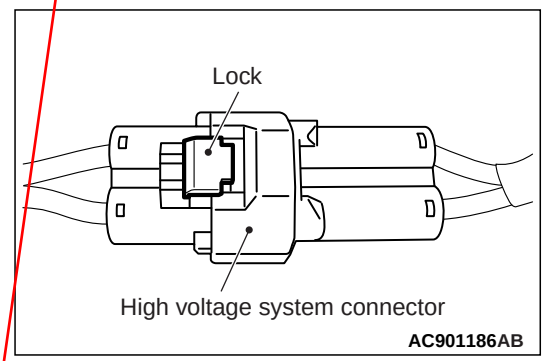

(Refer to GROUP 52B - Post-collision Diagnosis)

<Added>

The connector with lock mechanism is adopted.

⚠ CAUTION

Be sure to release the lock of the connector with your hands, because use of a tool or others may damage the connector.

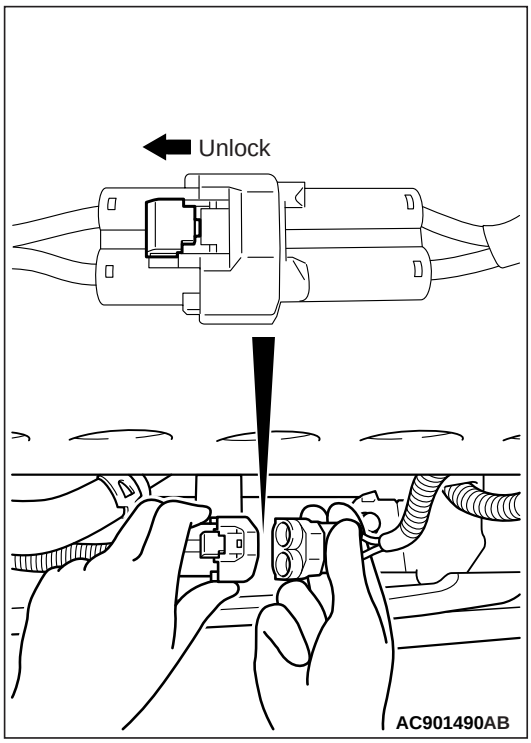

Unlock the connector by sliding the lock, and then remove it.