SERVICE BULLETIN

MITSUBISHI MOTORS

GLOBAL AFTER SALES OFFICE, MITSUBISHI MOTORS CORPORATION

PURPOSE : CHANGE	ISSUE NO. : MSB-14EXL54-002	DATE : 2014-09-24
SUBJECT : Additional description about the front fog lamp		<DESTINATION/MODEL> (As per attached sheet 1) <M/Y> 07-15
GROUP : Gr:54(Chassis Electrical)		L200/TRITON(KA0T/KB0T) NATIVA/ PAJERO SPORT/MONTERO SPORT/ CHALLENGER (KH0W/KG0W)

1. Description :

Please refer to the attached document for the information about the change of mention in the applicable service manual.

2. Affected service manuals :

Please refer to the attached document (Attached sheet 1)

3. About the details :

Please refer to the attached document (Attached sheet 2)

TRITON
<THAI>

Applicable manual	Pub. No.	Applicable title (INFO ID)
2008 TRITON Workshop Manual	DRAFT	SERVICE SPECIFICATION (M540-40-090-13200-01) FRONT FOG LAMP AIMING (M540-40-030-15200-01)
2009 TRITON Workshop Manual	DRAFT	SERVICE SPECIFICATION (M540-40-090-13200-01) FRONT FOG LAMP AIMING (M540-40-030-50500-01)
2010 TRITON Workshop Manual	DRAFT	SERVICE SPECIFICATION (M540-40-090-13200-01) FRONT FOG LAMP AIMING (M540-40-030-59400-01)
2015 TRITON Workshop Manual	DRAFT	SERVICE SPECIFICATION (M540-40-090-02400-01) FRONT FOG LAMP AIMING (M540-40-030-92500-01)

L200
<EU/RUSSIA>

Applicable manual	Pub. No.	Applicable title (INFO ID)
2007 L200 Workshop Manual	CCRE07E2-CD(ENG) CCRF07E2-CD(FRE) CCRG07E2-CD(GER) CCRS07E2-CD(SPA) RUSSIA:N/A	SERVICE SPECIFICATION (M540-40-090-02400-01) FRONT FOG LAMP AIMING (M540-40-030-03300-01)
2009 L200 Workshop Manual	CCRE09E1-CD(ENG) CCRF09E1-CD(FRE) CCRG09E1-CD(GER) CCRS09E1-CD(SPA) CCRI09E1-CD(ITA) RUSSIA:N/A	SERVICE SPECIFICATION (M540-40-090-02400-01) FRONT FOG LAMP AIMING (M540-40-030-51600-01)
2010 L200 Workshop Manual	CCRE10E1-CD(ENG) CCRF10E1-CD(FRE) CCRG10E1-CD(GER) CCRS10E1-CD(SPA) CCRI10E1-CD(ITA) RUSSIA:N/A	SERVICE SPECIFICATION (M540-40-090-02400-01) FRONT FOG LAMP AIMING （M540-40-030-68000-01）
2011 L200 Workshop Manual	CCRE11E1-CD(ENG) CCRF11E1-CD(FRE) CCRG11E1-CD(GER) CCRS11E1-CD(SPA) CCRI11E1-CD(ITA) RUSSIA:N/A	SERVICE SPECIFICATION (M540-40-090-02400-01) FRONT FOG LAMP AIMING （M540-40-030-68000-01）
2012 L200 Workshop Manual	CCRE12E1-CD(ENG) CCRF12E1-CD(FRE) CCRG12E1-CD(GER) CCRS12E1-CD(SPA) CCRI12E1-CD(ITA) RUSSIA:N/A	SERVICE SPECIFICATION (M540-40-090-02400-01) FRONT FOG LAMP AIMING （M540-40-030-68000-01）
2013 L200 Workshop Manual	CKTE13E1-CD(ENG) CKTF13E1-CD(FRE) CKTG13E1-CD(GER) CKTS13E1-CD(SPA) CKTI13E1-CD(ITA) RUSSIA:N/A	SERVICE SPECIFICATION (M540-40-090-02400-01) FRONT FOG LAMP AIMING （M540-40-030-68000-01）
2014 L200 Workshop Manual	CKTE14E1-CD(ENG) CKTF14E1-CD(FRE) CKTG14E1-CD(GER) CKTS14E1-CD(SPA) CKTI14E1-CD(ITA) RUSSIA:N/A	SERVICE SPECIFICATION (M540-40-090-02400-01) FRONT FOG LAMP AIMING （M540-40-030-68000-01）

2015 L200 Workshop Manual	CKTE15E1-CD(ENG) CKTF15E1-CD(FRE) CKTG15E1-CD(GER) CKTS15E1-CD(SPA) CKTI15E1-CD(ITA) RUSSIA:N/A	SERVICE SPECIFICATION (M540-40-090-02400-01) FRONT FOG LAMP AIMING （M540-40-030-90300-01）

L200
<EXP/GCC>

Applicable manual	Pub. No.	Applicable title (INFO ID)
2007 L200 Workshop Manual	PWTE0603R1(ENG) PWTS0604R1(SPA)	SERVICE SPECIFICATION (M540-40-090-02400-01) FRONT FOG LAMP AIMING (M540-40-030-03300-01)
2008 L200 Workshop Manual	PWTE0703R(ENG) PWTS0704R(SPA)	SERVICE SPECIFICATION (M540-40-090-02400-01) FRONT FOG LAMP AIMING (M540-40-030-03301-01)
2009 L200 Workshop Manual	PWTE0806R(ENG) PWTS0807R(SPA)	SERVICE SPECIFICATION (M540-40-090-02400-01) FRONT FOG LAMP AIMING (M540-40-030-31200-01)
2010 L200 Workshop Manual	PWTE0903R(ENG) PWTS0904R(SPA)	SERVICE SPECIFICATION (M540-40-090-02400-01) FRONT FOG LAMP AIMING (M540-40-030-59400-01)
2011 L200 Workshop Manual	PWTE1002R(ENG) PWTS1003R(SPA)	SERVICE SPECIFICATION (M540-40-090-02400-01) FRONT FOG LAMP AIMING (M540-40-030-59400-01)
2015 L200 Workshop Manual	DRAFT	SERVICE SPECIFICATION (M540-40-090-02400-01) FRONT FOG LAMP AIMING (M540-40-030-92500-01)

TRITON
<MMAL/NZ>

Applicable manual	Pub. No.	Applicable title (INFO ID)
2007 TRITON　Workshop Manual	MR936105 NZ:DRAFT	SERVICE SPECIFICATION (M540-40-090-04600-01) FRONT FOG LAMP AIMING (M540-40-030-04400-01)
2007.5 TRITON　Workshop Manual	MR936245 NZ:DRAFT	SERVICE SPECIFICATION (M540-40-090-04600-01) FRONT FOG LAMP AIMING (M540-40-030-04400-01)
2008 TRITON　Workshop Manual	MR936232 NZ:DRAFT	SERVICE SPECIFICATION (M540-40-090-04600-01) FRONT FOG LAMP AIMING (M540-40-030-04400-01)
2009 TRITON　Workshop Manual	MR936476 NZ:DRAFT	SERVICE SPECIFICATION (M540-40-090-04600-01) FRONT FOG LAMP AIMING (M540-40-030-33400-01)
2010 TRITON　Workshop Manual	MR936949 NZ:DRAFT	SERVICE SPECIFICATION (M540-40-090-04600-01) FRONT FOG LAMP AIMING (M540-40-030-67900-01)
2015 TRITON　Workshop Manual	AU900413 NZ:DRAFT	SERVICE SPECIFICATION (M540-40-090-04600-01) FRONT FOG LAMP AIMING (M540-40-030-92500-01)

NATIVA/PAJERO SPORT/MONTERO SPORT
< THAI/EXP/GCC/RUSSIA/MMAL/NZ>

Applicable manual	Pub. No.	Applicable title (INFO ID)
2009 NATIVA/PAJERO SPORT/MONTERO SPORT Workshop Manual	PWJE0808R-2(ENG) PWJS0809R-2(SPA) RUSSIA:N/A NZ:DRAFT MMAL:DRAFT	SERVICE SPECIFICATION (M540-40-090-27300-01) FRONT FOG LAMP AIMING (M540-40-030-36700-01)
2010 NATIVA/PAJERO SPORT/MONTERO SPORT Workshop Manual	PWJE0910R(ENG) PWJS0911R(SPA) RUSSIA:N/A NZ:DRAFT MMAL:MR936972	SERVICE SPECIFICATION (M540-40-090-27300-01) FRONT FOG LAMP AIMING (M540-40-030-36700-01)
2011 NATIVA/PAJERO SPORT/MONTERO SPORT Workshop Manual	PWJE1004R(ENG) PWJS1005R(SPA) RUSSIA:N/A NZ:DRAFT MMAL:AU900055	SERVICE SPECIFICATION (M540-40-090-27300-01) FRONT FOG LAMP AIMING (M540-40-030-36700-01)

CHALLENGER
<MMAL/NZ>

Applicable manual	Pub. No.	Applicable title (INFO ID)
2010 GHALLENGER Workshop Manual	MR936972 NZ:DRAFT	SERVICE SPECIFICATION (M540-40-090-27300-01) FRONT FOG LAMP AIMING (M540-40-030-36700-01)
2011 GHALLENGER Workshop Manual	AU900055 NZ:DRAFT	SERVICE SPECIFICATION (M540-40-090-27300-01) FRONT FOG LAMP AIMING (M540-40-030-36700-01)

Attached sheet 2

<Added>

Limit
39 mm (0.75°) to 89 mm (1.7°) below the horizontal (H)

FRONT FOG LAMP

SERVICE SPECIFICATION

M1540400900132

Item		Standard value
Front fog lamp aiming	Vertical direction	60 mm (1.15°) below horizontal (H)

SPECIAL TOOLS

M1540401800138

Tool	Number	Name	Use
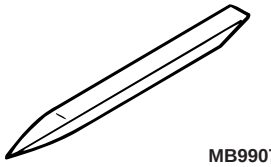 MB990784	MB990784	Ornament remover	Removal of fog lamp bezel

ON-VEHICLE SERVICE

FRONT FOG LAMP AIMING

M1540400300152

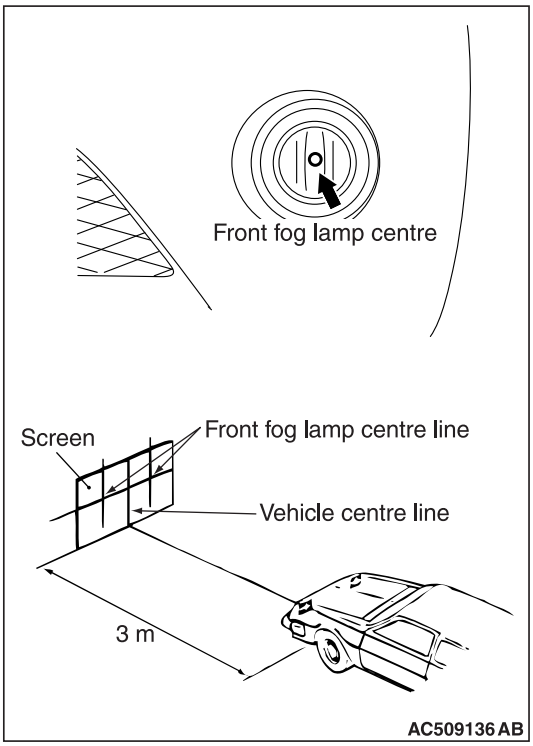

1. Measure the centre of the front fog lamps, as shown in the illustration.
2. Set the distance between the screen and the centre of the front fog lamps as shown in the illustration.
3. Inflate the types to the specified pressures and there should be no other load in the vehicles other than driver or substituted weight of approximately 75 kg placed in the driver's position.
4. With the engine running at 2,000 r/min, aim the front fog lamp.

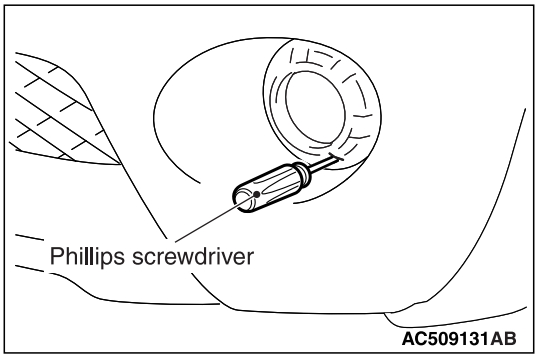

5. Insert a Phillips screwdriver into the service hole and place it on the adjusting screw.

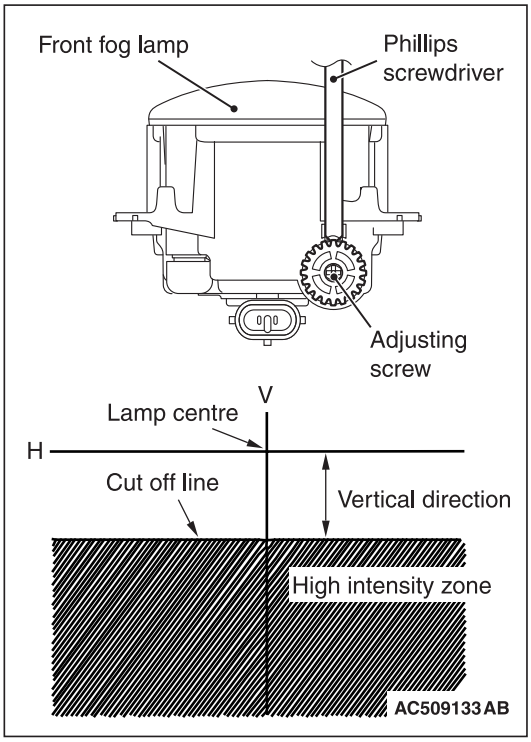

6. Adjust the cut off line (boundary between light and dark) position to the standard value with the adjusting screw.

Standard value:
(Vertical direction) 60 mm (1.15°) below horizontal (H)

<Added>

Limit:
(Vertical direction) 39 mm (0.75°) to 89 mm (1.7°) below the horizontal (H)

⚠ CAUTION
When marking the aiming adjustment, be sure to mask those lamps which are not being adjusted.

NOTE: The horizontal direction is non-adjustable. If the deviation of the light beam axis exceeds the standard value, check to be sure that the mounting location or some other point is not defective.

REPLACEMENT OF REPLACEABLE BULB

M1540400400159

⚠ CAUTION
Don't touch the bulb surface with bare hands or dirty gloves. If the bulb surface (glass part) gets dirty, clean it with alcohol or thinner immediately and dry well, and then install it.

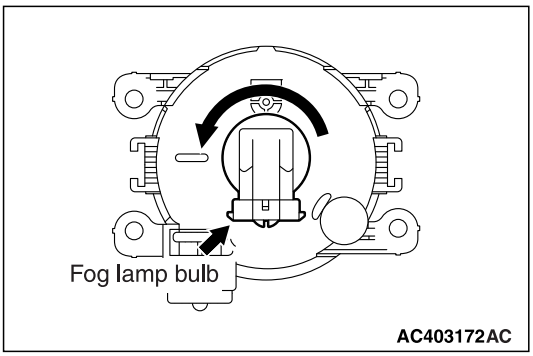

1. Disconnect the connector and withdraw the bulb.
2. Replace the valve, and connect securely the connector.