SERVICE BULLETIN

MITSUBISHI MOTORS

GLOBAL AFTER SALES OFFICE, MITSUBISHI MOTORS CORPORATION

PURPOSE : CHANGE	ISSUE NO. : MSB-14EXL55-002	DATE : 2014-10-16
SUBJECT : Omission of the description regarding the diagnosis by refrigerant pressure and compressor check		<DESTINATION/MODEL> (As per attached sheet 1) <M/Y> 07-15
GROUP : Gr:55(Heater Air Conditioner)		PAJERO/MONTERO(V80/90)

1. Description :

Please refer to the attached document for the information about the change of mention in the applicable service manual.

2. Affected service manuals :

Please refer to the attached document (Attached sheet 1)

3. About the details :

Please refer to the attached document (Attached sheet 2)

PAJERO/MONTERO
<EU>

Applicable manual	Pub. No.	Applicable title (INFO ID)
2007 PAJERO/MONTERO Workshop Manual	CBKE07E2-CD (ENG) CBKF07E2-CD (FRE) CBKG07E2-CD (GER) CBKS07E2-CD (SPA)	PERFORMANCE TEST (M15504000911ENG0000010000)
2008 PAJERO/MONTERO Workshop Manual	CBKE08E1-CD (ENG) CBKF08E1-CD (FRE) CBKG08E1-CD (GER) CBKS08E1-CD (SPA)	PERFORMANCE TEST (M552-00-140-92400-01)
2009 PAJERO/MONTERO Workshop Manual	CBKE09E2-CD (ENG) CBKF09E2-CD (FRE) CBKG09E2-CD (GER) CBKS09E2-CD (SPA)	PERFORMANCE TEST (M552-00-140-92400-01)
2010 PAJERO/MONTERO Workshop Manual	CBKE10E1-CD (ENG) CBKF10E1-CD (FRE) CBKG10E1-CD (GER) CBKS10E1-CD (SPA)	PERFORMANCE TEST (M552-00-141-21700-01)
2011 PAJERO/MONTERO Workshop Manual	CBKE11E1-CD (ENG) CBKF11E1-CD (FRE) CBKG11E1-CD (GER) CBKS11E1-CD (SPA)	PERFORMANCE TEST (M552-00-141-21700-01)
2012 PAJERO/MONTERO Workshop Manual	CBKE12E1-CD (ENG) CBKF12E1-CD (FRE) CBKG12E1-CD (GER) CBKI12E1-CD (ITA) CBKS12E1-CD (SPA)	PERFORMANCE TEST (M552-00-141-21700-01)
2013 PAJERO/MONTERO Workshop Manual	CVWE13E1-CD (ENG) CVWF13E1-CD (FRE) CVWG13E1-CD (GER) CVWI13E1-CD (ITA) CVWS13E1-CD (SPA)	PERFORMANCE TEST (M552-00-141-21700-01)
2014 PAJERO/MONTERO Workshop Manual	CVWE14E1-CD (ENG) CVWF14E1-CD (FRE) CVWG14E1-CD (GER) CVWI14E1-CD (ITA) CVWS14E1-CD (SPA)	PERFORMANCE TEST (M552-00-141-21700-01)
2015 PAJERO/MONTERO Workshop Manual	CVWE15E1-CD (ENG) CVWF15E1-CD (FRE) CVWG15E1-CD (GER) CVWI15E1-CD (ITA) CVWS15E1-CD (SPA)	PERFORMANCE TEST (M552-00-141-21700-01)

PAJERO/MONTERO
<EXP/GCC/CHINA>

Applicable manual	Pub. No.	Applicable title (INFO ID)
2007 PAJERO/MONTERO Workshop Manual	PWJE0605R (ENG) PWJE0606R (SPA) CHINA:DRAFT	PERFORMANCE TEST (M552-00-140-81600-01)
2008 PAJERO/MONTERO Workshop Manual	PWJE0709R (ENG) PWJE0710R (SPA) CHINA:DRAFT	PERFORMANCE TEST (M552-00-140-81600-01)
2008 PAJERO Workshop Manual < China >	CHINA:DRAFT	PERFORMANCE TEST (M552-00-140-81600-01)
2009 PAJERO/MONTERO Workshop Manual	PWJE0812R (ENG) PWJE0813R (SPA) CHINA:DRAFT	PERFORMANCE TEST (M552-00-140-81600-01)
2010 PAJERO/MONTERO Workshop Manual	PWJE0908R (ENG) PWJE0909R (SPA) CHINA:DRAFT	PERFORMANCE TEST (M552-00-140-81600-01)

PAJERO
<MMAL/NZ>

Applicable manual	Pub. No.	Applicable title (INFO ID)
2007 PAJERO Workshop Manual	MR936084 NZ:DRAFT	PERFORMANCE TEST (M552-00-140-77500-01)
2008 PAJERO Workshop Manual	MR936455 NZ:DRAFT	PERFORMANCE TEST (M552-00-140-77500-01)
2009 PAJERO Workshop Manual	MR936637 NZ:DRAFT	PERFORMANCE TEST (M552-00-140-77500-01)
2010 PAJERO Workshop Manual	MR936976 NZ:DRAFT	PERFORMANCE TEST (M552-00-140-77500-01)

Attached sheet 2 (1/6)

ON-VEHICLE SERVICE

PERFORMANCE TEST

M1552001400816

AIR CONDITIONER PERFORMANCE TEST

1. The vehicle to be tested should be in a place that is not in direct sunlight.
2. The ambient condition should be 20 to 35°C at dry-bulb temperature, 50 to 80% at relative humidity.
3. Equalize the vehicle compartment air with the ambient air by opening the hood, the doors and the buck door fully.

⚠ CAUTION

- **Place the quick joint onto the service valve, and press to fit the part A securely until the sleeve clicks into place.**
- **When connecting, run your hand along the hose while pressing to ensure that there are no bends in the hose.**

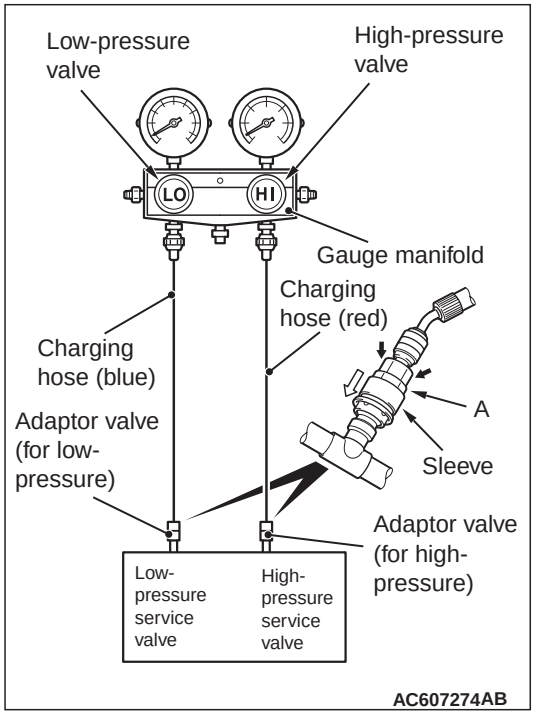

4. Connect the charging hose (red) to the high-pressure side of the gauge manifold with it closed. Then connect the high-pressure quick joint to the charging hose (red), and fit it to the high-pressure service valve (incorporated in vehicle-side liquid pipe B).

⚠ CAUTION

- **Place the quick joint onto the service valve, and press to fit the part A securely until the sleeve clicks into place.**
- **When connecting, run your hand along the hose while pressing to ensure that there are no bends in the hose.**

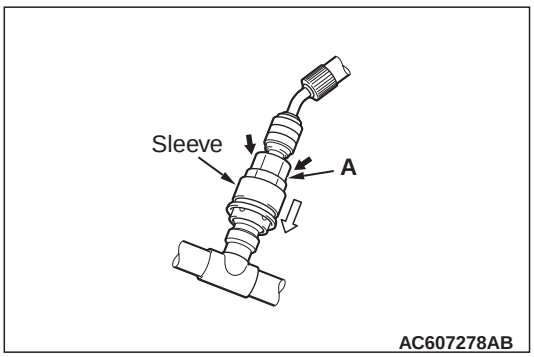

5. Connect the charging hose (blue) to the low-pressure side of the gauge manifold with it closed. Then connect the low-pressure quick joint to the charging hose (blue), and fit it to the low-pressure service valve (incorporated in vehicle-side suction flexible hose).
6. Start the engine.
7. Set the A/C controls as follows:

When the front A/C test

- A/C switch: A/C – ON position
- Mode selection: FACE position
- Temperature control: MAXIMUM COOLING position
- Air selection: RECIRCULATION position
- Blower switch:Fast position

When the rear A/C test

- The front A/C should be set as above
- A/C switch: A/C ON position
- Temperature control: MAXIMUM COOLING position
- Blower switch:Fast position

8. Adjust engine speed to 1,500 r/min with A/C clutch engaged.
9. Measure the high pressure, and ensure that the measurement is within the permissible range described in the chart.

   NOTE: Prior to the measurement, wait until the refrigerant pressure is stable (approximately 10 minutes after the engine is started).
10. Measure the low pressure, and ensure that the measurement is within the permissible range described in the chart.

Attached sheet 2 (2/6)

⚠ CAUTION
Set a thermometer so that cool air blows against the sensing part directly.

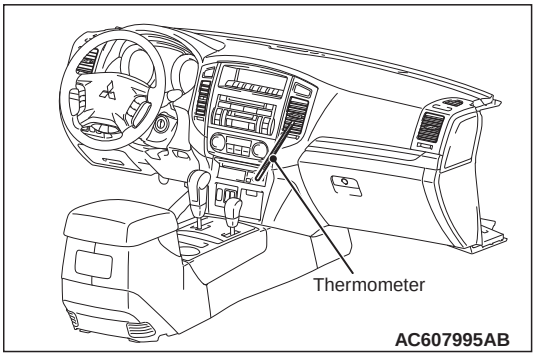

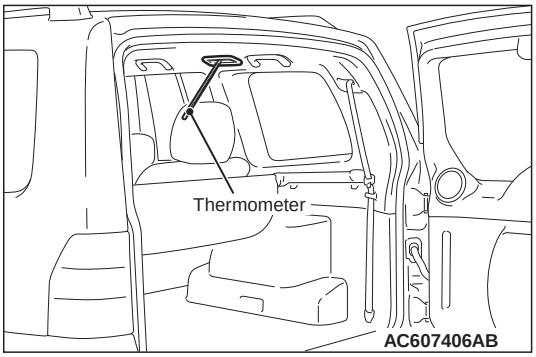

11. Set a thermometer in the air outlet on the instrument panel.

⚠ CAUTION
Set a wet and dry bulb thermometer so that cool air does not blow against it.

12. Set a wet and dry bulb thermometer in the air intake.

13. Wait until the air outlet temperature is stable (approximately 10 minutes after the A/C starts), and measure wet-bulb temperatures at the air outlet and the air intake.

⚠ CAUTION
On completion, stop the engine and wait until the high-pressure side of the gauge manifold is depressurised. Then remove the quick joints and the others.

14. The air outlet temperature should satisfy the graph.

PERFORMANCE TEMPERATURE CHART

SINGLE-A/C TEST

Garage ambient temperature °C	20	25	30	35
Discharge air temperature °C	8.8 – 10.4	11.5 – 14.1	15.4 – 17.5	18.9 – 21.6
Compressor high pressure kPa	1, 180 – 1, 160	1, 270 – 1, 250	1,420 – 1,390	1,490 – 1,470
Compressor low pressure kPa	130 – 140	150 – 160	180 – 190	210 – 220

DUAL-A/C TEST

Garage ambient temperature °C	20	25	30	35
Discharge air temperature °C (FRONT)	8.2 – 10.8	11.6 – 12.7	14.6 – 19.1	19.2 – 24.4
Discharge air temperature °C (REAR)	12.0 – 13.9	15.3 – 15.8	18.4 – 21.5	22.2 – 26.8
Compressor high pressure kPa	1, 230 – 1, 290	1, 380 – 1,400	1,450 – 1,520	1,650 – 1,890
Compressor low pressure kPa	180 – 210	220 – 220	250 – 290	300 – 360

SIMPLE INSPECTION OF THE A/C PRESSURE SENSOR

M1552014700356

1. Assemble a gauge manifold on the high pressure service valve.

Insert the Attached sheet 2 (3/6), (4/6), (5/6), (6/6)

Attached sheet 2 (3/6)

<Added>

DIAGNOSIS BY REFRIGERANT PRESSURE

A/C system symptom	Measurement circumstance				Cause	Measures
	High pressure	Low pressure	Air outlet temperature	Note		
Cooler is not effective.	Low	High	High	• Pressure for low pressure side is high, and high pressure side is low. • When the A/C operation is stopped, the pressures of low pressure side and high pressure side immediately become identical.	• Leakage inside compressor • Faulty compression of compressor	1. Check according to the compressor check. 1. When no foreign object is present to the oil, and when the colour is light grey, replace only the compressor. 2. When foreign objects are mixed to the oil, and the colour is black, replace the compressor and receiver. 2. Perform the evacuation sufficiently to remove the foreign objects and moisture in the cycle. 3. Fill the new gas to the specified amount.
	High	High	High	• Low pressure side/ high pressure side pressure is too high. • Low pressure side piping is too hot to touch.	• Air is mixed to the refrigerant cycle. • Evacuation is insufficient.	1. Perform the evacuation sufficiently, and remove the foreign objects and moisture in the cycle. 2. Fill the new gas to the specified amount.
Sufficient cooling and insufficient cooling occur periodically.	Fluctuation	Fluctuation	Fluctuation	During the air conditioner operation, the low pressure side pressure alternates between the negative pressure and normal. (also in the high pressure side, the abnormal and normal statuses are alternated).	The moisture in the refrigerant cycle becomes frozen in the expansion valve, then the circulation of refrigerant is stopped temporarily. Subsequently, the status recovers to normal by the melting of ice.	1. Replace the receiver (drier). 2. Perform the evacuation sufficiently, and remove the moisture in the cycle. 3. Fill the new refrigerant to the specified amount.

<Added>

Attached sheet 2 (4/6)

A/C system symptom	Measurement circumstance				Cause	Measures
	High pressure	Low pressure	Air outlet temperature	Note		
Cooler is sometimes not effective. (works occasionally)	Low	Vacuum	Fluctuation	• The low pressure side pressure indicates the vacuum, and the high pressure side indicates the low pressure. • To the piping before and after the expansion valve, frost or dew is observed.	• The foreign objects or moisture inside the refrigerant cycle deposits or freezes inside the expansion valve, and the refrigerant flow is disturbed. • Because of the expansion valve operation failure, the refrigerant flow is disturbed.	1. Check the expansion valve. 1. If foreign objects are present inside the expansion valve, remove them by using an air gun or others. 2. When no foreign object is present, the expansion valve operation failure is suspected. Therefore, replace the expansion valve. 2. Perform the evacuation sufficiently, and remove the foreign objects and moisture in the cycle. 3. Fill the new refrigerant to the specified amount.

A/C system symptom	Measurement circumstance				Cause	Measures
	High pressure	Low pressure	Air outlet temperature	Note		
Cooling effectiveness is bad.	Low	Low	Slightly high	• Low pressure side/ high pressure side pressure is low. • Outlet air temperature is high.	• Gas leakage is present to somewhere in the refrigerant cycle. • Refrigerant gas amount is insufficient.	1. When the pressure gauge indication is close to zero, check the leak position, and then repair the leakage. Also, when the value is lower than the standard pressure, check if the gas leakage is present, and repair if necessary. 2. After checking the leak position, sufficiently perform the evacuation, then fill the new gas to the specified amount.
	High	High	Slightly high	Low pressure side/high pressure side pressure is too high.	• Refrigerant amount is excessive. • Condenser cooling is insufficient.	1. Clean the condenser fin (fouling, fin clogging) 2. Check the condenser fan motor (radiator fan) operation. 3. When 1 and 2 are normal, recover all the refrigerant. Then, perform a sufficient evacuation again, and fill the new gas to the specified amount.
	High	High	High	• Low pressure side/ high pressure side pressure is too high. • Frost or dew is formed to the low pressure side.	Expansion valve trouble (valve opened excessively)	Replace the expansion valve.
	Normal	Normal	Slightly high	-	Because of the slight difference of measurement environment, secular change of vehicle, or others, it is possible that the outlet temperature fluctuation has occurred.	Check the status for a while, and if the status does not improve, recover all the refrigerant, then fill to the appropriate amount.

<Added>

Attached sheet 2 (6/6)

COMPRESSOR CHECK

Trouble symptom	Check method/ circumstance	Cause	Measures
Abnormal noise from compressor main body at A/C operation (rattling noise)	• Refrigerant cycle gauge pressure check 1. Low pressure side/high pressure side pressure is high. 2. Pressure hunting occurs.	Abnormal noise due to excessive refrigerant charging	Fill an appropriate amount of refrigerant.
	• Check the refrigerant cycle gauge pressure. When the pressure difference between the low pressure side and high pressure side is small, remove the compressor oil, and perform the oil judgment.	Damage to inside the compressor	Compressor oil judgment result: Between transparent and grey/ No contamination with foreign materials 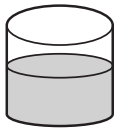 Measures: Replace only the compressor. Compressor oil judgment result: Between grey and black/ Contaminated with foreign materials  leasures: Replace the compressor and the rec AC610320AB
Compressor malfunction (belt slip)	Check the compressor rotation, and if a seizure or sticking is present, remove the compressor oil, then perform a judgment.		