SERVICE BULLETIN

MITSUBISHI MOTORS

GLOBAL AFTER SALES OFFICE, MITSUBISHI MOTORS CORPORATION

PURPOSE : CHANGE	ISSUE NO. : MSB-14EXML00-003	DATE : 2014-02-28
SUBJECT : TROUBLESHOOTING REGARDING A POWER WINDOW		<DESTINATION/MODEL> (AS PER ATTACHED SHEET 1) <M/Y> 13-14
GROUP : GENERAL(Gr:00)		MIRAGE/SPACE STAR/ATTRAGE/MIRAGE G4

1. Description :

Please refer to the attached document for the information about the change of mention in the applicable service manual.

2. Affected service manuals :

Please refer to the attached document (Attached sheet 1)

3. About the details :

Please refer to the attached document (Attached sheet 6-33)

MIRAGE/SPACE STAR

<Thailand/G.EXP/GCC>

Applicable manual	Pub No.	Applicable title (INFO ID)	Contents
2013 MIRAGE Workshop Manual	THAI:DRAFT G.EXP/GCC: PWFE1201R(ENG)	INSPECTION PROCEDURE 2: FRONT RIGHT POWER WINDOW DOES NOT WORK (M429-01-380-01600-01)	Attached sheet 6
		INSPECTION PROCEDURE 3: FRONT LEFT POWER WINDOW DOES NOT WORK (M429-01-390-01300-01)	Attached sheet 7
		TROUBLE SYMPTOM CHART <POWER WINDOW (VEHICLES WITH SAFTY SYSTEM)> (M429-00-281-10100-01)	Attached sheet 8
		INSPECTION PROCEDURE 3: RELEVANT POWER WINDOW(S) DOES NOT WORK BY MEANS OF THE FRONT AND REAR PASSENGER'S POWER WINDOW SUB SWITCHS (M429-00-491-78400-01)	Attached sheet 9 (1/3)-(3/3)
		INSPECTION PROCEDURE 4: FRONT AND/OR REAR PASSENGER'S POWER WINDOW(S) DO NOT WORK BY MEANS OF THE POWER WINDOW MAIN SWITCH (M429-00-501-51300-01)	Attached sheet 10
		INSPECTION PROCEDURE 6: POWER WINDOW ANTI-TRAP FUNCTION DOES NOT WORK NORMALLY <DRIVER'S SIDE DOOR> (M429-00-520-93400-01)	Attached sheet 11 (1/3)
		INSPECTION PROCEDURE 7: WINDOW GLASS LOWERS AUTOMATICALLY WHILE IT IS RISING <DRIVER'S SIDE DOOR> (M429-00-530-92000-01)	Attached sheet 11 (1/3),(2/3)
		INSPECTION PROCEDURE 7: WINDOW GLASS LOWERS AUTOMATICALLY WHILE IT IS RISING <DRIVER'S SIDE DOOR> (M429-00-530-92000-01) after	Attached sheet 11 (1/3),(3/3)
		DOOR TRIM REMOVAL AND INSTALLATION (M521-00-641-517000-01)	Attached sheet 32

<EU/MMAL/NZ>

Applicable manual	Pub No.	Applicable title (INFO ID)	Contents
2013 MIRAGE/ SPACE STAR Workshop Manual	CA0E13E1-CD (Eng) CA0F13E1-CD (Fre) CA0G13E1-CD (Ger) CA0S13E1-CD (Spa) CA0I13E1-CD (Ita) MMAL:AU900305 NZ:DRAFT	INSPECTION PROCEDURE 2: FRONT RIGHT POWER WINDOW DOES NOT WORK <VEHICLES WITHOUT DRIVER'S SIDE AUTO DOWN MECHANISM> (M429-01-380-02700-01)	Attached sheet 12
		INSPECTION PROCEDURE 3: FRONT LEFT POWER WINDOW DOES NOT WORK <VEHICLES WITHOUT DRIVER'S SIDE AUTO DOWN MECHANISM> (M429-01-390-02400-01)	Attached sheet 13
		INSPECTION PROCEDURE 5: RELEVANT POWER WINDOW DOES NOT WORK BY MEANS OF THE FRONT PASSENGER'S POWER WINDOW SUB SWITCH <VEHICLES WITH DRIVER'S SIDE AUTO DOWN MECHANISM> (M429-00-491-82500-01)	Attached sheet 14

		INSPECTION PROCEDURE 6: FRONT PASSENGER'S POWER WINDOW DOES NOT WORK BY MEANS OF THE POWER WINDOW MAIN SWITCH <VEHICLES WITH DRIVER'S SIDE AUTO DOWN MECHANISM> (M429-00-501-53500-01)	Attached sheet 15
Applicable manual	Pub No.	Applicable title (INFO ID)	Contents
2013 MIRAGE/ SPACE STAR Workshop Manual	CA0E13E1-CD (Eng) CA0F13E1-CD (Fre) CA0G13E1-CD (Ger) CA0S13E1-CD (Spa) CA0I13E1-CD (Ita) MMAL:AU900305 NZ:DRAFT	TROUBLE SYMPTOM CHART <POWER WINDOW (VEHICLES WITH SAFTY SYSTEM)> (M429-00-281-10100-01)	Attached sheet 16
		INSPECTION PROCEDURE 3: RELEVANT POWER WINDOW(S) DOES NOT WORK BY MEANS OF THE FRONT AND REAR PASSENGER'S POWER WINDOW SUB SWITCHES (M429-00-491-83600-01)	Attached sheet 17 (1/3)-(3/3)
		INSPECTION PROCEDURE 4: FRONT AND/OR REAR PASSENGER'S POWER WINDOW(S) DO NOT WORK BY MEANS OF THE POWER WINDOW MAIN SWITCH (M429-00-501-54600-01)	Attached sheet 18
		INSPECTION PROCEDURE 6: POWER WINDOW ANTI-TRAP FUNCTION DOES NOT WORK NORMALLY <DRIVER'S SIDE DOOR> (M429-00-520-96700-01)	Attached sheet 19 (1/3)
		INSPECTION PROCEDURE 7: WINDOW GLASS LOWERS AUTOMATICALLY WHILE IT IS RISING <DRIVER'S SIDE DOOR> (M429-00-530-95300-01)	Attached sheet 19 (1/3),(2/3)
		INSPECTION PROCEDURE 7: WINDOW GLASS LOWERS AUTOMATICALLY WHILE IT IS RISING <DRIVER'S SIDE DOOR> (M429-00-530-95300-01) after	Attached sheet 19 (1/3),(3/3)
		DOOR TRIM REMOVAL AND INSTALLATION (M521-00-641-551000-01)	Attached sheet 33

<MMNA>

Applicable manual	Pub No.	Applicable title (INFO ID)	Contents
2014 MIRAGE Service Manual	MSCD-016B-2014	INSPECTION PROCEDURE 2: FRONT RIGHT POWER WINDOW DOES NOT WORK < VEHICLES WITHOUT DRIVER'S SIDE AUTO DOWN MECHANISM> (M429-01-380-02700-01)	Attached sheet 20
		INSPECTION PROCEDURE 3: FRONT LEFT POWER WINDOW DOES NOT WORK < VEHICLES WITHOUT DRIVER'S SIDE AUTO DOWN MECHANISM> (M429-01-390-02400-01)	Attached sheet 21
		INSPECTION PROCEDURE 5: RELEVANT POWER WINDOW DOES NOT WORK BY MEANS OF THE FRONT PASSENGER'S POWER WINDOW SUB SWITCH <VEHICLES WITH DRIVER'S SIDE AUTO DOWN MECHANISM> (M429-00-491-82500-01)	Attached sheet 22
		INSPECTION PROCEDURE 6: FRONT PASSENGER'S POWER WINDOW DOES NOT WORK BY MEANS OF THE POWER WINDOW MAIN SWITCH <VEHICLES WITH DRIVER'S SIDE AUTO DOWN MECHANISM> (M429-00-501-53500-01)	Attached sheet 23
		TROUBLE SYMPTOM CHART <POWER WINDOW (VEHICLES WITH SAFTY SYSTEM)> (M429-00-281-10100-01)	Attached sheet 24

		INSPECTION PROCEDURE 3: RELEVANT POWER WINDOW(S) DOES NOT WORK BY MEANS OF THE FRONT AND REAR PASSENGER'S POWER WINDOW SUB SWITCHES (M429-00-491-83600-01)	Attached sheet 25 (1/3)-(3/3)
Applicable manual	Pub No.	Applicable title (INFO ID)	Contents
2014 MIRAGE Service Manual	MSCD-016B-2014	INSPECTION PROCEDURE 4: FRONT AND/OR REAR PASSENGER'S POWER WINDOW(S) DO NOT WORK BY MEANS OF THE POWER WINDOW MAIN SWITCH (M429-00-501-54600-01)	Attached sheet 26
		INSPECTION PROCEDURE 6: POWER WINDOW ANTI-TRAP FUNCTION DOES NOT WORK NORMALLY <DRIVER'S SIDE DOOR> (M429-00-520-96700-01)	Attached sheet 27 (1/4)
		INSPECTION PROCEDURE 7: WINDOW GLASS LOWERS AUTOMATICALLY WHILE IT IS RISING <DRIVER'S SIDE DOOR> (M429-00-530-95300-01)	Attached sheet 27 (2/4)-(3/4)
		INSPECTION PROCEDURE 7: WINDOW GLASS LOWERS AUTOMATICALLY WHILE IT IS RISING <DRIVER'S SIDE DOOR> (M429-00-530-95300-01) after	Attached sheet 27 (1/4),(2/4) ,(4/4)
		DOOR TRIM REMOVAL AND INSTALLATION (M521-00-641-551000-01)	Attached sheet 33

ATTRAGE

<EU/MMAL/NZ>

Applicable manual	Pub No.	Applicable title (INFO ID)	Contents
2014 MIRAGE Service Manual	CA1E14E1-CD (Eng) CA1F14E1-CD (Fre) CA1G14E1-CD (Ger) CA1S14E1-CD (Spa) CA1I14E1-CD (Ita) MMAL:AU900435 NZ:DRAFT	TROUBLE SYMPTOM CHART <POWER WINDOW> (M429-00-281-19000-01)	Attached sheet 28
		INSPECTION PROCEDURE 3: RELEVANT POWER WINDOW(S) DOES NOT WORK BY MEANS OF THE FRONT AND REAR PASSENGER'S POWER WINDOW SUB SWITCHES (M429-00-491-88100-01)	Attached sheet 29 (1/3)-(3/3)
		INSPECTION PROCEDURE 4: FRONT AND/OR REAR PASSENGER'S POWER WINDOW(S) DO NOT WORK BY MEANS OF THE POWER WINDOW MAIN SWITCH (M429-00-501-54600-01)	Attached sheet 30
		INSPECTION PROCEDURE 6: POWER WINDOW ANTI-TRAP FUNCTION DOES NOT WORK NORMALLY <DRIVER'S SIDE DOOR> (M429-00-520-96700-01)	Attached sheet 31 (1/3)
		INSPECTION PROCEDURE 7: WINDOW GLASS LOWERS AUTOMATICALLY WHILE IT IS RISING <DRIVER'S SIDE DOOR> (M429-00-530-95300-01)	Attached sheet 31 (1/3),(2/3)
		INSPECTION PROCEDURE 7: WINDOW GLASS LOWERS AUTOMATICALLY WHILE IT IS RISING <DRIVER'S SIDE DOOR> (M429-00-530-95300-01) after	Attached sheet 31 (1/3),(3/3)
		DOOR TRIM REMOVAL AND INSTALLATION (M521-00-641-603000-01)	Attached sheet 33

Attached sheet 6

YES : Go to Step 3.
NO : Go to Step 2.

STEP 2. Check of short to power supply, short to earth, and open circuit in power supply line between intermediate connector and power window main switch connector.

Q: Is the check result normal?
YES : The trouble can be an intermittent malfunction (Refer to GROUP 00, How to use Troubleshooting/inspection Service Points – How to Cope with Intermittent Malfunction).
NO : Repair the wiring harness.

STEP 3. Check the power window main switch.
Check that the power window main switch works normally (Refer to inspection).

Q: Is the check result normal?
YES : Go to Step 4.
NO : Replace the power window main switch.

<Deleted>

STEP 4. Check the front power window motor (front: RH).
Check that the power window motor (front: RH) works normally (Refer to inspection).

Q: Is the check result normal?
YES : Go to Step 5.
NO : Replace the power window motor (front: RH).

STEP 5. Check of short to power supply, short to earth, and open circuit in input and output line between power window main switch connector and power window motor (front: RH) connector.

Q: Is the check result normal?
YES : Go to Step 6.
NO : Repair the wiring harness.

STEP 6. Check of open circuit in earth line between front power window main switch connector and body earth.

Q: Is the check result normal?
YES : Go to Step 7.
NO : Repair the wiring harness.

STEP 7. Retest the system.
(1) Replace the power window main switch.
(2) Check that the driver's power window works by means of the power window main switch.

Q: Is the check result normal?
YES : The procedure is complete.
NO : Intermittent malfunction (Refer to GROUP 00 – How to Use Troubleshooting/ Inspection Service Points - How to Cope with Intermittent Malfunction .)

<Incorrect>

INSPECTION PROCEDURE 3: Front left power window does not work

COMMENTS ON TROUBLE SYMPTOM
If the passenger's door power window does not work by means of the front power window sub switch (LH), the front power window sub switch (LH) or the passenger's door power window motor may be defective.

PROBABLE CAUSES
- Malfunction of the front power window sub switch (LH)
- Malfunction of the passenger's door power window motor
- Damaged harness wires and connectors

DIAGNOSIS PROCEDURE

STEP 1. Voltage measurement at the front power window sub switch (LH) connector (power supply line).
(1) Disconnect the connector, and measure at the wiring harness side.
(2) Turn the ignition switch to the ON position.
(3) Check the voltage between the front power window sub switch (LH) connector (power supply line) and body earth.

OK: System voltage

Q: Is the check result normal?
YES : Go to Step 3.
NO : Go to Step 2.

<Correct>

YES : Intermittent malfunction (Refer to GROUP 00 — How to Use Troubleshooting/Inspection Service Points - How to Cope with Intermittent Malfunction .)
NO : Go to Step 1.

Attached sheet 7

STEP 2. Check of short to power supply, short to earth, and open circuit in power supply line between intermediate connector and front power window sub switch (LH) connector.

Q: Is the check result normal?
YES : The trouble can be an intermittent malfunction (Refer to GROUP 00, How to use Troubleshooting/inspection Service Points – How to Cope with Intermittent Malfunction).
NO : Repair the wiring harness.

STEP 3. Check the front power window sub switch (LH).
Check that the front power window sub switch (LH) works normally (Refer to inspection).

Q: Is the check result normal?
YES : Go to Step 4.
NO : Replace the front power window sub switch (LH).

<Deleted>

STEP 4. Check the front power window motor (front: LH).
Check that the power window motor (front: LH) works normally (Refer to inspection).

Q: Is the check result normal?
YES : Go to Step 5.
NO : Replace the power window motor (front: LH).

STEP 5. Check of short to power supply, short to earth, and open circuit in input and output line between front power window sub switch (LH) connector and power window motor (front: LH) connector.

Q: Is the check result normal?
YES : Go to Step 6.
NO : Repair the wiring harness.

STEP 6. Check of open circuit in earth line between front power window sub switch (LH) connector and body earth.

Q: Is the check result normal?
YES : Go to Step 7.
NO : Repair the wiring harness.

STEP 7. Retest the system.
(1) Replace the front power window sub switch (LH).
(2) Check that the passenger's power window works by means of the front power window sub switch (LH).

Q: Is the check result normal?
YES : The procedure is complete.
NO : Intermittent malfunction (Refer to GROUP 00 – How to Use Troubleshooting/ Inspection Service Points - How to Cope with Intermittent Malfunction .)

<Incorrect>

INSPECTION PROCEDURE 4: Power window timer function does not work normally.

⚠ CAUTION
Before replacing the ECU, ensure that the power supply circuit, the earth circuit and the communication circuit are normal.

COMMENTS ON TROUBLE SYMPTOM
If the power window timer does not work normally, a malfunction of the power window main switch or ETACS-ECU is suspected.

PROBABLE CAUSES
- Malfunction of the door switch (Driver's side)
- Malfunction of the door switch (Front passenger's side)
- Malfunction of the power window main switch
- Malfunction of ETACS-ECU
- Damaged wiring harness and connectors

DIAGNOSTIC PROCEDURE

1. Check the power supply system.
2. M.U.T.-III data list
   - Turn the ignition switch to the ON position.
   - Close the driver's door.
   - Close the front passenger's door.
3. Retest the system.

<Correct>

YES : Intermittent malfunction (Refer to GROUP 00 – How to Use Troubleshooting/Inspection Service Points - How to Cope with Intermittent Malfunction .)
NO : Go to Step 1.

Attached sheet 8

TROUBLE SYMPTOM CHART <POWER WINDOW (Vehicles with safety system)>

M1429002801101

⚠ CAUTION

During diagnosis, a diagnosis code associated with other system may be set when the ignition switch is turned on with connector(s) disconnected. On completion, confirm all systems for diagnosis code(s). If diagnosis code(s) are set, erase them all.

Trouble symptom	Inspection procedure number	Reference page
Power windows do not work at all.	1	
Driver's power window does not work by means of the power window main switch.	2	
Relevant power window(s) does not work by means of the front and rear passenger's power window sub switches.	3	
Front and/or rear passenger's power window(s) do not work by means of the power window main switch.	4	
Power window timer function does not work normally.	5	
Power window anti-trap function does not work normally <Driver's side door>.	6	
Window glass lowers automatically while it is rising <Driver's side door>.	7	

SYMPTOM PROCEDURES <POWER WINDOW (Vehicles with safety sysytem)>

<Added>

Trouble symptom	Inspection procedure number
Power window main switch one-touch does not work <Driver's side door>.	8

INSPECTION PROCEDURE 1: Power windows do not work at all.

⚠ CAUTION

Before replacing the ECU, ensure that the power supply circuit, the earth circuit and the communication circuit are normal.

COMMENTS ON TROUBLE SYMPTOM

If the power windows do not work at all, the power window relay or the ETACS-ECU may be defective.

PROBABLE CAUSES

- Malfunction of the power window relay
- Malfunction of ETACS-ECU
- Damaged wiring harness and connectors

DIAGNOSTIC PROCEDURE

STEP 1. Check the power supply system.

With the ignition switch in the LOCK (OFF) position, check if the following function operates normally:

- Hazard warning lamp

Q: Is the check result normal?

YES : Go to Step 2.
NO : Refer to GROUP 54A – Malfunction of ETACS-ECU Power Supply Circuit .

STEP 2. M.U.T.-III diagnosis code

Check that ETACS-ECU sets a diagnosis code.

Q: Is the diagnosis code set?

YES : Refer to GROUP 54A – Diagnosis Code Chart .
NO : Go to Step 3.

STEP 3. M.U.T.-III data list

Check the ETACS-ECU service item related to the power window.

Item No.	Item name	Normal condition
30	Ignition switch(IG1)	ON

OK: Normal condition is displayed.

Q: Is the check result normal?

Attached sheet 9 (1/3)

PROBABLE CAUSES

- Malfunction of front passenger's or rear passenger's power window sub switch(es)
- Malfunction of front passenger's or rear passenger's power window motor(s)
- Damaged wiring harness and connectors

DIAGNOSTIC PROCEDURE

STEP 1. Check the power window main switch.
Check that the power window lock switch is turned off.

Q: Is the check result normal?
YES : Go to Step 2.
NO : Turn off the power window lock switch.

STEP 2. M.U.T.-III diagnosis code
Check that ETACS-ECU sets a diagnosis code.

Q: Is the diagnosis code set?
YES : Refer to GROUP 54A – Diagnosis Code Chart .
NO : Go to Step 3.

STEP 3. Determine a trouble spot.

Q: Which power window does not work?
Front passenger's door : Go to Step 4.
Rear right door : Go to Step 10.
Rear left door : Go to Step 16.

STEP 4. Check the front power window sub switch
Check that the front power window sub switch works normally. Refer to Power Window Sub Switch Continuity Check .

Q: Is the check result normal?
YES : Go to Step 5.
NO : Replace the front power window sub switch.

<Deleted>

STEP 5. Check the front power window motor (LH)
Check that the front power window motor (LH) works normally. Refer to Power Window Motor Continuity Check .

Q: Is the check result normal?
YES : Go to Step 6.
NO : Replace the front power window motor (LH).

Go to Step 4
<Correct>

STEP 6. Voltage measurement at front power window sub switch connector (power supply line)
(1) Disconnect the connector, and measure at the wiring harness side.
(2) Turn the ignition switch to the ON position.
(3) Measure the voltage between the front power window sub switch connector (power supply line) and the body earth.

OK: System voltage

Q: Is the check result normal?
YES : Go to Step 8.
NO : Go to Step 7.

STEP 7. Check of short to power supply, short to earth, and open circuit in power supply line between the front power window sub switch connector and the power window relay connector

Q: Is the check result normal?
YES : Intermittent malfunction (Refer to GROUP 00 – How to Use Troubleshooting/ Inspection Service Points - How to Cope with Intermittent Malfunction).
NO : Repair the wiring harness.

STEP 8. Check of short to power supply, short to earth, and open circuit in input/output line between the front power window sub switch connector and the front power window motor (RH) connector

Q: Is the check result normal?
YES : Go to Step 9.
NO : Repair the wiring harness.

STEP 9. Retest the system.
(1) ~~Replace the front power window sub switch.~~
(2) Check that the front passenger's door power window can be operated by the front power window sub switch.

Q: Is the check result normal?
YES : The trouble can be an intermittent malfunction (Refer to GROUP 00, How to use Troubleshooting/inspection Service Points – How to Cope with Intermittent Malfunction).
NO : ~~Replace the front power window motor (passenger's side).~~

<Incorrect>

Attached sheet 9 (2/3)

STEP 10. Check the rear power window sub switch (RH)
Check that the rear power window sub switch (RH) works normally. Refer to Power Window Sub Switch Continuity Check .

Q: Is the check result normal?
YES : Go to Step 11.
NO : Replace the rear power window sub switch (RH).

<Deleted>

STEP 11. Check the rear power window motor (RH)
Check that the rear power window motor (RH) works normally. Refer to Power Window Motor Continuity Check .

Q: Is the check result normal?
YES : Go to Step 12.
NO : Replace the rear power window motor (RH).

STEP 12. Voltage measurement at rear power window sub switch (RH) connector (power supply line)
(1) Disconnect the connector, and measure at the wiring harness side.
(2) Turn the ignition switch to the ON position.
(3) Measure the voltage between the rear power window sub switch (RH) connector (power supply line) and the body earth.

OK: System voltage

Q: Is the check result normal?
YES : Go to Step 14.
NO : Go to Step 13.

STEP 13. Check of short to power supply, short to earth, and open circuit in power supply line between the rear power window sub switch (RH) connector and the power window relay connector

Q: Is the check result normal?
YES : Intermittent malfunction (Refer to GROUP 00 – How to Use Troubleshooting/ Inspection Service Points - How to Cope with Intermittent Malfunction).
NO : Repair the wiring harness.

STEP 14. Check of short to power supply, short to earth, and open circuit in input/output line between the rear power window sub switch (RH) connector and the rear power window motor (RH) connector

Q: Is the check result normal?
YES : Go to Step 15.
NO : Repair the wiring harness.

STEP 15. Retest the system.
(1) Replace the rear power window sub switch (RH).
(2) Check that the rear right door power window can be operated by the rear power window sub switch (RH).

<Correct>

Go to Step 10

Q: Is the check result normal?
YES : The trouble can be an intermittent malfunction (Refer to GROUP 00, How to use Troubleshooting/inspection Service Points – How to Cope with Intermittent Malfunction).
NO : Replace the rear power window motor (RH).

<Incorrect>

STEP 16. Check the rear power window sub switch (LH)
Check that the rear power window sub switch (LH) works normally. Refer to Power Window Sub Switch Continuity Check .

Q: Is the check result normal?
YES : Go to Step 17.
NO : Replace the rear power window sub switch (LH).

STEP 17. Check the rear power window motor (LH)
Check that the rear power window motor (LH) works normally. Refer to Power Window Motor Continuity Check .

Q: Is the check result normal?
YES : Go to Step 18.
NO : Replace the rear power window motor (LH).

STEP 18. Voltage measurement at rear power window sub switch (LH) connector (power supply line)
(1) Disconnect the connector, and measure at the wiring harness side.
(2) Turn the ignition switch to the ON position.
(3) Measure the voltage between the rear power window sub switch (LH) connector (power supply

Attached sheet 9 (3/3)

line) and the body earth.

OK: System voltage

Q: Is the check result normal?
YES : Go to Step 20.
NO : Go to Step 19.

STEP 19. Check of short to power supply, short to earth, and open circuit in power supply line between the rear power window sub switch (LH) connector and the power window relay connector <Deleted>

Q: Is the check result normal?
YES : Intermittent malfunction (Refer to GROUP 00 – How to Use Troubleshooting/ Inspection Service Points - How to Cope with Intermittent Malfunction).
NO : Repair the wiring harness.

STEP 20. Check of short to power supply, short to earth, and open circuit in input/output line between the rear power window sub switch (LH) connector and the rear power window motor (LH) connector

Q: Is the check result normal?
YES : Go to Step 21.
NO : Repair the wiring harness.

STEP 21. Retest the system.
(1) Replace the rear power window sub switch (LH). <Incorrect>
(2) Check that the rear left door power window can be operated by the rear power window sub switch (LH). <Correct>

Go to Step 16

Q: Is the check result normal?
YES : The trouble can be an intermittent malfunction (Refer to GROUP 00, How to use Troubleshooting/inspection Service Points – How to Cope with Intermittent Malfunction).
NO : Replace the rear power window motor (LH).

INSPECTION PROCEDURE 4: Front and/or rear passenger's power window(s) do not work by means of the power window main switch.

COMMENTS ON TROUBLE SYMPTOM
If the passenger's and/or rear power window does not work by means of the power window main switch, the power window main switch or the respective power window sub switch(es) may be defective.

PROBABLE CAUSES
- Malfunction of the power window main switch
- Malfunction of the front power window sub switch, rear power window sub switch (RH) or rear power window sub switch (LH)
- Damaged harness wires and connectors

DIAGNOSTIC PROCEDURE

STEP 1. Check the power window main switch.
Check that the driver's power window works by means of the power window main switch.

Q: Is the check result normal?
YES : Go to Step 2.
NO : Refer to inspection procedure 2 "Driver's power window does not work by means of the power window main switch ."

STEP 2. Check the power window sub switch.
Check that each power window works by means of the respective power window sub switch when the power window lock switch is turned off.

Q: Is the check result normal?
YES : Go to Step 3.
NO : Refer to inspection procedure 3 "Relevant power window(s) does not work by means of the front and rear passenger's power window sub switches ."

STEP 3. Determine a trouble spot.

Q: Which power window does not work?
Front passenger's door : Go to Step 4.
Rear right door : Go to Step 6.
Rear left door : Go to Step 8.

STEP 4. Check of short to power supply, short to earth, and open circuit in input/output line between power window main switch connector and front power window sub switch connector.

Q: Is the check result normal?
YES : Go to Step 5.
NO : Repair the wiring harness.

Attached sheet 10

<Deleted>

STEP 5. Retest the system.

(1) Replace the front power window sub switch.

(2) Check that the front passenger's power window works by means of the power window main switch.

Q: Is the check result normal?

YES : Intermittent malfunction (Refer to GROUP 00, How to use Troubleshooting/inspection Service Points – How to Cope with Intermittent Malfunction).

NO : Replace the power window main switch.

STEP 6. Check of short to power supply, short to earth, and open circuit in input/output line between power window main switch connector and rear power window sub switch (RH) connector.

<Deleted>

Q: Is the check result normal?

YES : Go to Step 7.

NO : Repair the wiring harness.

<Deleted>

STEP 7. Retest the system.

(1) Replace the rear power window sub switch (RH).

(2) Check that the rear right power window works by means of the power window main switch.

Q: Is the check result normal?

YES : Intermittent malfunction (Refer to GROUP 00, How to use Troubleshooting/inspection Service Points – How to Cope with Intermittent Malfunction).

NO : Replace the power window main switch.

STEP 8. Check of short to power supply, short to earth, and open circuit in input/output line between power window main switch connector and rear power window sub switch (LH) connector.

Q: Is the check result normal?

YES : Go to Step 9.

NO : Repair the wiring harness.

STEP 9. Retest the system.

(1) Replace the rear power window sub switch (LH).

(2) Check that the rear left power window works by means of the power window main switch.

Q: Is the check result normal?

YES : Intermittent malfunction (Refer to GROUP 00, How to use Troubleshooting/inspection Service Points – How to Cope with Intermittent Malfunction).

NO : Replace the power window main switch.

INSPECTION PROCEDURE 5: Power window timer function does not work normally.

⚠ CAUTION

Before replacing the ECU, ensure that the power supply circuit, the earth circuit and the communication circuit are normal.

COMMENTS ON TROUBLE SYMPTOM

If the power window timer does not work normally, a malfunction of the power window main switch or ETACS-ECU is suspected.

PROBABLE CAUSES

- Malfunction of the door switch (Driver's side)
- Malfunction of the door switch (Front passenger's side)
- Malfunction of the power window main switch
- Malfunction of ETACS-ECU
- Damaged wiring harness and connectors

DIAGNOSTIC PROCEDURE

1. Check the power supply system.
2. M.U.T.-III data list
   - Turn the ignition switch to the ON position.
   - Close the driver's door.
   - Close the front passenger's door.
3. Retest the system.

Attached sheet 11 (1/3)

INSPECTION PROCEDURE 6: Power window anti-trap function does not work normally <Driver's side door>.

<New>

STEP 1.

<Old>

~~STEP 2.~~ Check the power window fully closed position

(1) Carry out the learning procedures of the power window fully closed position. Refer to .

(2) Fully open the door window glass. Operate the power window switch to fully close the door window glass, and check if the door window glass raise without lowering automatically.

<New>

<Old>

Q: Is the check result normal?

YES : ~~Go to Step 3.~~ Go to Step 2.

NO : Refer to adjustment of faulty power window .

CAUTION

Before replacing the ECU, ensure that the input and output signal circuits are normal.

COMMENTS ON TROUBLE SYMPTOM

Malfunction of the power window motor revolution detection sensor or incorrectly installed or warped glass slider is suspected.

PROBABLE CAUSES

- Malfunction of the power window motor
- Incorrectly installed or warped glass slider
- Improperly adjusted door window glass

DIAGNOSTIC PROCEDURE

<Old>

STEP 2.

<New>

~~STEP 1.~~ Check of short to power supply, short to earth, and open circuit in VCC, SEN1, SEN2, SGND line between the power window main switch connector and the front power window motor (RH) connector

<Old>

<New>

Q: Is the check result normal?

YES : ~~Go to Step 2.~~ Go to Step 3.

NO : Repair the wiring harness.

STEP 3. Retest the system.

Check that the power window anti-trap function works.

Q: Is the check result normal?

YES : Intermittent malfunction (Refer to GROUP 00 – How to Use Troubleshooting/ Inspection Service Points - How to Cope with Intermittent Malfunction).

NO : Replace the power window motor of the door which the power window anti-trap function does not work on.

INSPECTION PROCEDURE 7: Window glass lowers automatically while it is rising <Driver's side door>.

COMMENTS ON TROUBLE SYMPTOM

If the sliding resistance is too great when the window is being raised or the window glass encounters an object, the window glass will lower by approximately 150 mm.

PROBABLE CAUSES

- Improperly adjusted door window glass
- Incorrectly installed or warped glass slider
- Malfunction of the power window motor
- Malfunction of the window regulator

DIAGNOSTIC PROCEDURE

1. Check that the door window glasses are installed correctly.
2. Retest the system.

<Old>

CHECK AT ECU TERMINAL <POWER WINDOW (Vehicles with safety system)>

M1429013600829

POWER WINDOW MAIN SWITCH TERMINAL CHECK

From attached sheet 11 (3/3)

From attached sheet 11 (2/3)

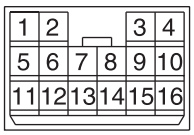

ACB04990AB

To attached sheet 11 (1/3)

<New>

CAUTION

Before replacing the ECU, ensure that the input and output signal circuits are normal.

COMMENTS ON TROUBLE SYMPTOM

If the sliding resistance is too great when the window is being raised or the window glass encounters an object, the window glass will lower by approximately 150 mm.

PROBABLE CAUSES

- Improperly adjusted door window glass
- Incorrectly installed or warped glass slider
- Damaged harness wires and connectors
- Malfunction of the power window motor
- Malfunction of the window regulator

DIAGNOSIS PROCEDURE

STEP 1. Check the power window fully closed position

(1)Carry out the learning procedures of the power window fully closed position. Refer to.
(2)Fully open the door window glass. Operate the power window switch to fully close the door window glass, and check if the door window glass raise without lowering automatically.

Q:Is the check result normal?

YES : Go to Step 2.
NO : Refer to adjustment of faulty power window.

STEP 2. Check of short to power supply, short to earth, and open circuit in VCC, SEN1, SEN2, SGND line between the power window main switch connector and the front power window motor (RH) connector

Q:Is the check result normal?

YES : Go to Step 3.
NO : Repair the wiring harness.

STEP 3. Retest the system.

Fully open the door window glass. Operate the power window switch to fully close the door window glass, and check if the door window glass raise without lowering automatically.

Q:Is the check result normal?

YES : Intermittent malfunction (Refer to GROUP 00 - How to Use Troubleshooting/ Inspection Service Points - How to Cope with Intermittent Malfunction).
NO : Adjustment of faulty power window (Refer to) and carry out the learning procedures of the power window fully closed position (Refer to). Then go to Step 4.

STEP 4. Retest the system.

Fully open the door window glass. Operate the power window switch to fully close the door window glass, and check if the door window glass raise without lowering automatically.

Q:Is the check result normal?

YES : Intermittent malfunction (Refer to GROUP 00 - How to Use Troubleshooting/ Inspection Service Points - How to Cope with Intermittent Malfunction).
NO : Replace the power window motor.

To attached sheet 11 (1/3)

<Added>

INSPECTION PROCEDURE 8: Power window main switch one-touch function does not work <Driver's side door>.

CAUTION

Before replacing the ECU, ensure that the input and output signal circuits are normal.

COMMENTS ON TROUBLE SYMPTOM

Malfunction of the power window motor revolution detection sensor or power window main switch.

PROBABLE CAUSES

- Malfunction of the power window main switch
- Damaged harness wires and connectors
- Malfunction of the power window motor

DIAGNOSIS PROCEDURE

STEP 1. Check the power window fully closed position

(1)Carry out the learning procedures of the power window fully closed position (Refer to).

(2)Check that the one-touch function works by means of the power window main switch.

Q:Is the check result normal?

YES : Go to Step 2.

NO : Refer to adjustment of faulty power window.

STEP 2. Check of short to power supply, short to earth, and open circuit in VCC, SEN1, SEN2, SGND line between the power window main switch connector and the front power window motor (RH) connector

Q:Is the check result normal?

YES : Go to Step 3.

NO : Repair the wiring harness.

STEP 3. Retest the system.

Check that the one-touch function works by means of the power window main switch.

Q:Is the check result normal?

YES : Intermittent malfunction (Refer to GROUP 00 - How to Use Troubleshooting/ Inspection Service Points - How to Cope with Intermittent Malfunction).

NO : Replace the power window main switch. Then go to Step 4.

STEP 4. Retest the system.

Check that the one-touch function works by means of the power window main switch.

Q:Is the check result normal?

YES : Intermittent malfunction (Refer to GROUP 00 - How to Use Troubleshooting/ Inspection Service Points - How to Cope with Intermittent Malfunction).

NO : Replace the power window motor.

Attached sheet 12

STEP 5. Check of short to power supply, short to earth, and open circuit in input and output line between front power window switch (passenger's side) <LHD> connector or front power window switch (driver's side) <RHD> connector and front power window motor (RH) connector. <Deleted>

Q: Is the check result normal?
YES : Go to Step 6.
NO : Repair the wiring harness.

STEP 6. Check of open circuit in earth line between front power window switch (passenger's side) <LHD> connector or front power window switch (driver's side) <RHD> connector and body earth. <Incorrect>

Q: Is the check result normal?
YES : Go to Step 7.
NO : Repair the wiring harness.

STEP 7. Retest the system.
(1) Replace the front power window switch (passenger's side) <LHD> or front power window switch (driver's side) <RHD>.
(2) Check that the front power window (RH) works by means of the front power window switch (passenger's side) <LHD> or front power window switch (driver's side) <RHD>.

Q: Is the check result normal?
YES : The procedure is complete.
NO : Intermittent malfunction (Refer to GROUP 00 – How to Use Troubleshooting/ Inspection Service Points - How to Cope with Intermittent Malfunction .)

INSPECTION PROCEDURE 3: Front left power window does not work <Vehicles without driver's side auto down mechanism>

COMMENTS ON TROUBLE SYMPTOM
If the front power window (LH) does not work by means of the front power window switch (driver's side) <LHD> or front power window switch (passenger's side) <RHD>, the front power window switch (driver's side) <LHD>, front power window switch (passenger's side) <RHD> or the front power window motor (LH) may be defective.

PROBABLE CAUSES
- Malfunction of the front power window switch (driver's side) <LHD>
- Malfunction of the front power window switch (passenger's side) <RHD>
- Malfunction of the front power window motor (LH)
- Damaged harness wires and connectors

DIAGNOSIS PROCEDURE

STEP 1. Voltage measurement at the front power window switch (driver's side) <LHD> connector (power supply line) or front power window switch (passenger' side) <RHD> connector (power supply line).
(1) Disconnect the connector, and measure at the wiring harness side.
(2) Turn the ignition switch to the ON position.
(3) Check the voltage between the front power window switch (driver's side) connector (power supply line) or front power window switch (passenger's side) <RHD> connector (power supply line) and body earth.
OK: System voltage

<Correct>

Q: Is the check result normal?
YES : Go to Step 3.
NO : Go to Step 2.

STEP 2. Check of short to power supply, short to earth, and open circuit in power supply line between intermediate connector and front power window switch (driver's side) <LHD> connector or front power window switch (passenger's side) <RHD> connector.

Q: Is the check result normal?
YES : The trouble can be an intermittent malfunction (Refer to GROUP 00, How to use Troubleshooting/inspection Service Points – How to Cope with Intermittent Malfunction).
NO : Repair the wiring harness.

YES : Intermittent malfunction (Refer to GROUP 00 — How to Use Troubleshooting/Inspection Service Points - How to Cope with Intermittent Malfunction .)
NO : Go to Step 1.

Attached sheet 13

STEP 3. Check the front power window switch (driver's side) <LHD> or front power window switch (passenger's side) <RHD>.

Check that the front power window switch (driver's side) <LHD> or front power window switch (passenger's side) <RHD> works normally (Refer to inspection).

Q: Is the check result normal?

YES : Go to Step 4.

NO : Replace the front power window switch (driver's side) <LHD> or front power window switch (passenger's side) <RHD>.

<Deleted>

STEP 4. Check the front power window motor (LH).

Check that the front power window motor (LH) works normally (Refer to inspection).

Q: Is the check result normal?

YES : Go to Step 5.

NO : Replace the front power window motor (LH).

STEP 5. Check of short to power supply, short to earth, and open circuit in input and output line between front power window switch (driver's side) <LHD> connector or front power window switch (passenger' side) <RHD> connector and front power window motor (LH) connector.

Q: Is the check result normal?

<Correct>

YES : Go to Step 6.

NO : Repair the wiring harness.

STEP 6. Check of open circuit in earth line between front power window switch (driver's side) <LHD> connector or front power window switch (passenger' side) <RHD> connector connector and body earth.

Q: Is the check result normal?

YES : Go to Step 7.

NO : Repair the wiring harness.

STEP 7. Retest the system.

(1) Replace the front power window switch (driver's side) <LHD> or front power window switch (passenger' side) <RHD>.

(2) Check that the front power window (LH) works by means of the front power window switch (driver's side) <LHD> or front power window switch (passenger' side) <RHD>.

<Incorrect>

Q: Is the check result normal?

YES : The procedure is complete.

NO : Intermittent malfunction (Refer to GROUP 00 – How to Use Troubleshooting/ Inspection Service Points - How to Cope with Intermittent Malfunction .)

YES : Intermittent malfunction (Refer to GROUP 00 — How to Use Troubleshooting/Inspection Service Points - How to Cope with Intermittent Malfunction .)

NO : Go to Step 1.

INSPECTION PROCEDURE 4: Driver's power window does not work by means of the power window main switch <Vehicles with driver's side auto down mechanism>.

⚠ CAUTION

Before replacing the ECU, ensure that the power supply circuit, the earth circuit and the communication circuit are normal.

COMMENTS ON TROUBLE SYMPTOM

If the driver's power window does not work by means of the power window main switch, a malfunction of the power window main switch or the front power window motor (driver's side) is suspected.

PROBABLE CAUSES

- Malfunction of the power window relay
- Malfunction of the power window main switch
- Malfunction of the front power window motor (driver's side)
- Damaged wiring harness and connectors

DIAGNOSIS PROCEDURE

STEP 1. Check the power window main switch.

(1) Check that the power window lock switch is turned off.

(2) Check that the passenger's power window works by means of the power window main switch.

Q: Is the check result normal?

YES : Go to Step 2.

NO : Replace the power window main switch.

STEP 2. Voltage measurement at power window main switch connector (+B line).

(1) Disconnect the connector, and measure at the wiring harness side.

(2) Measure the voltage between the power window main switch connector (+B line) and the body

Attached sheet 14

YES : Go to Step 5.
NO : Replace the front power window motor (LH) <LHD>.

STEP 4. Check the front power window motor (RH) <RHD>
Check that the front power window motor (RH) <RHD> works normally. Refer to Power Window Motor Continuity Check .

Q: Is the check result normal?
YES : Go to Step 5.
NO : Replace the front power window motor (RH) <RHD>.

STEP 5. Voltage measurement at front power window sub switch connector (power supply line)
(1) Disconnect the connector, and measure at the wiring harness side.
(2) Turn the ignition switch to the ON position.
(3) Measure the voltage between the front power window sub switch connector (power supply line) and the body earth.

OK: System voltage

Q: Is the check result normal?
YES <LHD> : Go to Step 7.
YES <RHD> : Go to Step 8.
NO : Go to Step 6.

<Deleted>

STEP 6. Check of short to power supply, short to earth, and open circuit in power supply line between the front power window sub switch connector and the power window relay connector

Q: Is the check result normal?

Go to Step 1.

<Correct>

YES : Intermittent malfunction (Refer to GROUP 00 – How to Use Troubleshooting/ Inspection Service Points - How to Cope with Intermittent Malfunction).
NO : Repair the wiring harness.

STEP 7. Check of short to power supply, short to earth, and open circuit in input/output line between the front power window sub switch connector and the front power window motor (LH) <LHD> connector

Q: Is the check result normal?
YES : Go to Step 9.
NO : Repair the wiring harness.

STEP 8. Check of short to power supply, short to earth, and open circuit in input/output line between the front power window sub switch connector and the front power window motor (RH) <RHD> connector

Q: Is the check result normal?
YES : Go to Step 9.
NO : Repair the wiring harness.

STEP 9. Retest the system.
(1) Replace the front power window sub switch.
(2) Check that the front passenger's door power window can be operated by the front power window sub switch.

Q: Is the check result normal?
YES : The trouble can be an intermittent malfunction (Refer to GROUP 00, How to use Troubleshooting/inspection Service Points – How to Cope with Intermittent Malfunction).
NO : Replace the front power window motor (passenger's side).

<Incorrect>

INSPECTION PROCEDURE 6: Front passenger's power window does not work by means of the power window main switch <Vehicles with driver's side auto down mechanism>.

COMMENTS ON TROUBLE SYMPTOM
If the front passenger's power window does not work by means of the power window main switch, the power window main switch or the respective power window sub switch may be defective.

PROBABLE CAUSES
- Malfunction of the power window main switch
- Malfunction of the front power window sub switch
- Damaged harness wires and connectors

DIAGNOSIS PROCEDURE

STEP 1. Check the power window main switch.
Check that the driver's power window works by means of the power window main switch.

Q: Is the check result normal?

Attached sheet 15

YES : Go to Step 2.
NO : Refer to inspection procedure 4 "Driver's power window does not work by means of the power window main switch ."

STEP 2. Check the power window sub switch.
Check that each power window works by means of the respective power window sub switch when the power window lock switch is turned off.

Q: Is the check result normal? <Deleted>
YES : Go to Step 3.
NO : Refer to inspection procedure 5 "Relevant power window does not work by means of the front passenger's power window sub switch ."

STEP 3. Check of short to power supply, short to earth, and open circuit in input/output line between power window main switch connector and front power window sub switch connector.

Q: Is the check result normal?
YES : Go to Step 4.
NO : Repair the wiring harness.

STEP 4. Retest the system.
(1) Replace the front power window sub switch.
(2) Check that the front passenger's power window works by means of the power window main switch.

Q: Is the check result normal?
YES : Intermittent malfunction (Refer to GROUP 00, How to use Troubleshooting/inspection Service Points – How to Cope with Intermittent Malfunction).
NO : Replace the power window main switch.

INSPECTION PROCEDURE 7: Power window timer function does not work normally.

⚠ CAUTION
Before replacing the ECU, ensure that the power supply circuit, the earth circuit and the communication circuit are normal.

COMMENTS ON TROUBLE SYMPTOM
If the power window timer does not work normally, a malfunction of the power window main switch or ETACS-ECU is suspected.

PROBABLE CAUSES
- Malfunction of the door switch (Driver's side)
- Malfunction of the door switch (Front passenger's side)
- Malfunction of the power window main switch
- Malfunction of ETACS-ECU
- Damaged wiring harness and connectors

DIAGNOSIS PROCEDURE
1. Check the power supply system.
2. M.U.T.-III data list
   - Turn the ignition switch to the ON position.
   - Close the driver's door.
   - Close the front passenger's door.
3. Retest the system.

Attached sheet 16

TROUBLE SYMPTOM CHART <POWER WINDOW (Vehicles with safety system)>

M1429002801101

⚠ CAUTION

During diagnosis, a diagnosis code associated with other system may be set when the ignition switch is turned on with connector(s) disconnected. On completion, confirm all systems for diagnosis code(s). If diagnosis code(s) are set, erase them all.

Trouble symptom	Inspection procedure number	Reference page
Power windows do not work at all.	1	
Driver's power window does not work by means of the power window main switch.	2	
Relevant power window(s) does not work by means of the front and rear passenger's power window sub switches.	3	
Front and/or rear passenger's power window(s) do not work by means of the power window main switch.	4	
Power window timer function does not work normally.	5	
Power window anti-trap function does not work normally <Driver's side door>.	6	
Window glass lowers automatically while it is rising <Driver's side door>.	7	

SYMPTOM PROCEDURES <POWER WINDOW (Vehicles with safety system)>

<Added>

Trouble symptom	Inspection procedure number
Power window main switch one-touch does not work <Driver's side door>.	8

INSPECTION PROCEDURE 1: Power windows do not work at all.

⚠ CAUTION

Before replacing the ECU, ensure that the power supply circuit, the earth circuit and the communication circuit are normal.

COMMENTS ON TROUBLE SYMPTOM

If the power windows do not work at all, the power window relay or the ETACS-ECU may be defective.

PROBABLE CAUSES

- Malfunction of the power window relay
- Malfunction of ETACS-ECU
- Damaged wiring harness and connectors

DIAGNOSIS PROCEDURE

STEP 1. Check the power supply system.

With the ignition switch in the LOCK (OFF) position, check if the following function operates normally:

- Hazard warning lamp

Q: Is the check result normal?

YES : Go to Step 2.
NO : Refer to GROUP 54A – Malfunction of ETACS-ECU Power Supply Circuit .

STEP 2. M.U.T.-III diagnosis code

Check that ETACS-ECU stores a diagnosis code.

Q: Is the diagnosis code stored?

YES : Refer to GROUP 54A – Diagnosis Code Chart .
NO : Go to Step 3.

STEP 3. M.U.T.-III data list

Check the ETACS-ECU service item related to the power window.

Item No.	Item name	Normal condition
30	Ignition switch(IG1)	ON

OK: Normal condition is displayed.

Q: Is the check result normal?

Attached sheet 17 (1/3)

STEP 8. Check of short to power supply, short to earth, and open circuit in power supply line between the front power window sub switch connector and the power window relay connector

Q: Is the check result normal?
YES : Intermittent malfunction (Refer to GROUP 00 – How to Use Troubleshooting/ Inspection Service Points - How to Cope with Intermittent Malfunction).
NO : Repair the wiring harness.

STEP 9. Check of short to power supply, short to earth, and open circuit in input/output line between the front power window sub switch connector and the front power window motor (RH) <LHD> connector

Q: Is the check result normal?
YES : Go to Step 11.
NO : Repair the wiring harness.

STEP 10. Check of short to power supply, short to earth, and open circuit in input/output line between the front power window sub switch connector and the front power window motor (LH) <RHD> connector

Q: Is the check result normal?
YES : Go to Step 11.
NO : Repair the wiring harness.

<Deleted>

STEP 11. Retest the system.
(1) Replace the front power window sub switch.
(2) Check that the front passenger's door power window can be operated by the front power window sub switch.

<Correct>

Go to Step 4.

Q: Is the check result normal?
YES : The trouble can be an intermittent malfunction (Refer to GROUP 00, How to use Troubleshooting/inspection Service Points – How to Cope with Intermittent Malfunction).
NO : Replace the front power window motor (passenger's side).

<Incorrect>

STEP 12. Check the rear power window sub switch (RH)
Check that the rear power window sub switch (RH) works normally. Refer to Power Window Sub Switch Continuity Check .

<Deleted>

Q: Is the check result normal?
YES : Go to Step 13.
NO : Replace the rear power window sub switch (RH).

STEP 13. Check the rear power window motor (RH)
Check that the rear power window motor (RH) works normally. Refer to Power Window Motor Continuity Check .

Q: Is the check result normal?
YES : Go to Step 14.
NO : Replace the rear power window motor (RH).

STEP 14. Voltage measurement at rear power window sub switch (RH) connector (power supply line)
(1) Disconnect the connector, and measure at the wiring harness side.
(2) Turn the ignition switch to the ON position.
(3) Measure the voltage between the rear power window sub switch (RH) connector (power supply line) and the body earth.

OK: System voltage

Q: Is the check result normal?
YES : Go to Step 16.
NO : Go to Step 15.

STEP 15. Check of short to power supply, short to earth, and open circuit in power supply line between the rear power window sub switch (RH) connector and the power window relay connector

Q: Is the check result normal?
YES : Intermittent malfunction (Refer to GROUP 00 – How to Use Troubleshooting/ Inspection Service Points - How to Cope with Intermittent Malfunction).
NO : Repair the wiring harness.

STEP 16. Check of short to power supply, short to earth, and open circuit in input/output line between the rear power window sub switch (RH) connector and the rear power window motor (RH) connector

Q: Is the check result normal?
YES : Go to Step 17.
NO : Repair the wiring harness.

STEP 17. Retest the system.
(1) Replace the rear power window sub switch (RH).
(2) Check that the rear right door power window can

Attached sheet 17 (2/3)

be operated by the rear power window sub switch (RH).

<Correct>

Go to Step 12.

Q: Is the check result normal?

YES : The trouble can be an intermittent malfunction (Refer to GROUP 00, How to use Troubleshooting/inspection Service Points – How to Cope with Intermittent Malfunction).

NO : Replace the rear power window motor (RH).

<Incorrect>

STEP 18. Check the rear power window sub switch (LH)

Check that the rear power window sub switch (LH) works normally. Refer to Power Window Sub Switch Continuity Check .

Q: Is the check result normal?

YES : Go to Step 19.

NO : Replace the rear power window sub switch (LH).

STEP 19. Voltage measurement at rear power window sub switch (LH) connector (power supply line)

(1) Disconnect the connector, and measure at the wiring harness side.
(2) Turn the ignition switch to the ON position.
(3) Measure the voltage between the rear power window sub switch (LH) connector (power supply line) and the body earth.

OK: System voltage

Q: Is the check result normal?

YES : Go to Step 21.

NO : Go to Step 20.

STEP 20. Check of short to power supply, short to earth, and open circuit in power supply line between the rear power window sub switch (LH) connector and the power window relay connector

Q: Is the check result normal?

YES : Intermittent malfunction (Refer to GROUP 00 – How to Use Troubleshooting/ Inspection Service Points - How to Cope with Intermittent Malfunction).

NO : Repair the wiring harness.

STEP 21. Check of short to power supply, short to earth, and open circuit in input/output line between the rear power window sub switch (LH) connector and the rear power window motor (LH) connector

Q: Is the check result normal?

YES : Go to Step 22.

NO : Repair the wiring harness.

STEP 22. Retest the system.

(1) Replace the rear power window sub switch (LH).
(2) Check that the rear left door power window can be operated by the rear power window sub switch (LH).

Q: Is the check result normal?

YES : The trouble can be an intermittent malfunction (Refer to GROUP 00, How to use Troubleshooting/inspection Service Points – How to Cope with Intermittent Malfunction).

NO : Replace the rear power window motor (LH).

<Old>

From attached sheet 17 (3/3)

INSPECTION PROCEDURE 4: Front and/or rear passenger's power window(s) do not work by means of the power window main switch.

COMMENTS ON TROUBLE SYMPTOM

If the passenger's and/or rear power window does not work by means of the power window main switch, the power window main switch or the respective power window sub switch(es) may be defective.

PROBABLE CAUSES

- Malfunction of the power window main switch
- Malfunction of the front power window sub switch, rear power window sub switch (RH) or rear power window sub switch (LH)
- Damaged harness wires and connectors

DIAGNOSIS PROCEDURE

STEP 1. Check the power window main switch.

Check that the driver's power window works by means of the power window main switch.

Q: Is the check result normal?

YES : Go to Step 2.

NO : Refer to inspection procedure 2 "Driver's power window does not work by means of the power window main switch ."

To attached sheet 17 (2/3)

<New>

STEP 19. Check the rear power window motor (LH)
Check that the rear power window motor (LH) works normally. Refer to Power Window Motor Continuity Check.

Q: Is the check result normal?
YES : Go to Step 20.
NO : Replace the rear power window motor (LH).

STEP 20. Voltage measurement at rear power window sub switch (LH) connector (power supply line)
(1) Disconnect the connector, and measure at the wiring harness side.
(2) Turn the ignition switch to the ON position.
(3) Measure the voltage between the rear power window sub switch (LH) connector (power supply line) and the body earth.
OK: System voltage

Q: Is the check result normal?
YES : Go to Step 22.
NO : Go to Step 21.

STEP 21. Check of short to power supply, short to earth, and open circuit in power supply line between the rear power window sub switch (LH) connector and the power window relay connector

Q: Is the check result normal?
YES : Intermittent malfunction (Refer to GROUP 00 — How to Use Troubleshooting/Inspection Service Points - How to Cope with Intermittent Malfunction).
NO : Repair the wiring harness.

STEP 22. Check of short to power supply, short to earth, and open circuit in input/output line between the rear power window sub switch (LH) connector and the rear power window motor (LH) connector

Q: Is the check result normal?
YES : Go to Step 23.
NO : Repair the wiring harness.

STEP 23. Retest the system.
(1) Check that the rear left door power window can be operated by the rear power window sub switch (LH).

Q: Is the check result normal?
YES : The trouble can be an intermittent malfunction (Refer to GROUP 00, How to use Troubleshooting/inspection Service Points — How to Cope with Intermittent Malfunction).
NO : Go to Step 18.

Attached sheet 18

STEP 2. Check the power window sub switch.
Check that each power window works by means of the respective power window sub switch when the power window lock switch is turned off.

Q: Is the check result normal?
YES : Go to Step 3.
NO : Refer to inspection procedure 3 "Relevant power window(s) does not work by means of the front and rear passenger's power window sub switches ."

STEP 3. Determine a trouble spot.

Q: Which power window does not work?
Front passenger's door : Go to Step 4.
Rear right door : Go to Step 6.
Rear left door : Go to Step 8.

STEP 4. Check of short to power supply, short to earth, and open circuit in input/output line between power window main switch connector and front power window sub switch connector.

Q: Is the check result normal?
YES : Go to Step 5.
NO : Repair the wiring harness.

<Deleted>

STEP 5. Retest the system.
(1) Replace the front power window sub switch.
(2) Check that the front passenger's power window works by means of the power window main switch.

Q: Is the check result normal?
YES : Intermittent malfunction (Refer to GROUP 00, How to use Troubleshooting/inspection Service Points – How to Cope with Intermittent Malfunction).
NO : Replace the power window main switch.

STEP 6. Check of short to power supply, short to earth, and open circuit in input/output line between power window main switch connector and rear power window sub switch (RH) connector.

Q: Is the check result normal?
YES : Go to Step 7.
NO : Repair the wiring harness.

<Deleted>

STEP 7. Retest the system.
(1) Replace the rear power window sub switch (RH).
(2) Check that the rear right power window works by means of the power window main switch.

Q: Is the check result normal?
YES : Intermittent malfunction (Refer to GROUP 00, How to use Troubleshooting/inspection Service Points – How to Cope with Intermittent Malfunction).
NO : Replace the power window main switch.

STEP 8. Check of short to power supply, short to earth, and open circuit in input/output line between power window main switch connector and rear power window sub switch (LH) connector.

Q: Is the check result normal?
YES : Go to Step 9.
NO : Repair the wiring harness.

<Deleted>

STEP 9. Retest the system.
(1) Replace the rear power window sub switch (LH).
(2) Check that the rear left power window works by means of the power window main switch.

Q: Is the check result normal?
YES : Intermittent malfunction (Refer to GROUP 00, How to use Troubleshooting/inspection Service Points – How to Cope with Intermittent Malfunction).
NO : Replace the power window main switch.

INSPECTION PROCEDURE 5: Power window timer function does not work normally.

⚠ CAUTION
Before replacing the ECU, ensure that the power supply circuit, the earth circuit and the communication circuit are normal.

COMMENTS ON TROUBLE SYMPTOM
If the power window timer does not work normally, a malfunction of the power window main switch or ETACS-ECU is suspected.

PROBABLE CAUSES
- Malfunction of the door switch (Driver's side)
- Malfunction of the door switch (Front passenger's side)
- Malfunction of the power window main switch
- Malfunction of ETACS-ECU

Attached sheet 19 (1/3)

- Damaged wiring harness and connectors

DIAGNOSIS PROCEDURE

1. Check the power supply system.

2. M.U.T.-III data list
   - Turn the ignition switch to the ON position.
   - Close the driver's door.
   - Close the front passenger's door.
3. Retest the system.

INSPECTION PROCEDURE 6: Power window anti-trap function does not work normally <Driver's side door>.

⚠ CAUTION
Before replacing the ECU, ensure that the input and output signal circuits are normal.

COMMENTS ON TROUBLE SYMPTOM
Malfunction of the power window motor revolution detection sensor or incorrectly installed or warped glass slider is suspected.

PROBABLE CAUSES
- Malfunction of the power window motor
- Incorrectly installed or warped glass slider
- Improperly adjusted door window glass

DIAGNOSIS PROCEDURE

<Old> <New> STEP 1.

~~STEP 1.~~ Check of short to power supply, short to earth, and open circuit in VCC, SEN1, SEN2, SGND line between the power window main switch connector and ~~the front power window motor (RH)~~ the front window motor (LH) <LHD>, the front window motor (RH)<RHD> connector <Incorrect> <Correct>

<Old> <New>

Q: Is the check result normal?
YES : ~~Go to Step 2.~~ Go to Step 3.
NO : Repair the wiring harness.

<Old> <New>

~~STEP 2.~~ Check the power window fully closed position
(1) Carry out the learning procedures of the power window fully closed position. Refer to .
(2) Fully open the door window glass. Operate the power window switch to fully close the door window glass, and check if the door window glass raise without lowering automatically.

<Old> <New>

Q: Is the check result normal?
YES : ~~Go to Step 3.~~ Go to Step 2.
NO : Refer to adjustment of faulty power window .

STEP 3. Retest the system.
Check that the power window anti-trap function works.

Q: Is the check result normal?
YES : Intermittent malfunction (Refer to GROUP 00 – How to Use Troubleshooting/ Inspection Service Points - How to Cope with Intermittent Malfunction).
NO : Replace the power window motor of the door which the power window anti-trap function does not work on.

INSPECTION PROCEDURE 7: Window glass lowers automatically while it is rising <Driver's side door>.

<Old>

COMMENTS ON TROUBLE SYMPTOM
If the sliding resistance is too great when the window is being raised or the window glass encounters an object, the window glass will lower by approximately 150 mm.

PROBABLE CAUSES
- Improperly adjusted door window glass
- Incorrectly installed or warped glass slider
- Malfunction of the power window motor
- Malfunction of the window regulator

DIAGNOSIS PROCEDURE

1. Check that the door window glasses are installed correctly.
2. Retest the system.

From attached sheet 19 (3/3)

From attached sheet 19 (2/3)

To attached sheet 19 (1/3)

<New>

CAUTION
Before replacing the ECU, ensure that the input and output signal circuits are normal.

COMMENTS ON TROUBLE SYMPTOM
If the sliding resistance is too great when the window is being raised or the window glass encounters an object, the window glass will lower by approximately 150 mm.

PROBABLE CAUSES
- Improperly adjusted door window glass
- Incorrectly installed or warped glass slider
- Damaged harness wires and connectors
- Malfunction of the power window motor
- Malfunction of the window regulator

DIAGNOSIS PROCEDURE

STEP 1. Check the power window fully closed position
(1)Carry out the learning procedures of the power window fully closed position. Refer to.
(2)Fully open the door window glass. Operate the power window switch to fully close the door window glass, and check if the door window glass raise without lowering automatically.

Q:Is the check result normal?
YES : Go to Step 2.
NO : Refer to adjustment of faulty power window.

STEP 2. Check of short to power supply, short to earth, and open circuit in VCC, SEN1, SEN2, SGND line between the power window main switch connector and the front power window motor (LH) <LHD>, the front power window motor (RH) <RHD> connector
Q:Is the check result normal?
YES : Go to Step 3.
NO : Repair the wiring harness.

STEP 3. Retest the system.
Fully open the door window glass. Operate the power window switch to fully close the door window glass, and check if the door window glass raise without lowering automatically.

Q:Is the check result normal?
YES : Intermittent malfunction (Refer to GROUP 00 - How to Use Troubleshooting/ Inspection Service Points - How to Cope with Intermittent Malfunction).
NO : Adjustment of faulty power window (Refer to) and carry out the learning procedures of the power window fully closed position (Refer to). Then go to Step 4.

STEP 4. Retest the system.
Fully open the door window glass. Operate the power window switch to fully close the door window glass, and check if the door window glass raise without lowering automatically.

Q:Is the check result normal?
YES : Intermittent malfunction (Refer to GROUP 00 - How to Use Troubleshooting/ Inspection Service Points - How to Cope with Intermittent Malfunction).
NO : Replace the power window motor.

To attached sheet 19 (1/3)

<Added>

INSPECTION PROCEDURE 8: Power window main switch one-touch function does not work <Driver's side door>.

CAUTION

Before replacing the ECU, ensure that the input and output signal circuits are normal.

COMMENTS ON TROUBLE SYMPTOM

Malfunction of the power window motor revolution detection sensor or power window main switch.

PROBABLE CAUSES

・Malfunction of the power window main switch
・Damaged harness wires and connectors
・Malfunction of the power window motor

DIAGNOSIS PROCEDURE

STEP 1. Check the power window fully closed position

(1)Carry out the learning procedures of the power window fully closed position (Refer to).
(2)Check that the one-touch function works by means of the power window main switch.

Q:Is the check result normal?

YES : Go to Step 2.
NO : Refer to adjustment of faulty power window.

STEP 2. Check of short to power supply, short to earth, and open circuit in VCC, SEN1, SEN2, SGND line between the power window main switch connector and the front power window motor (LH) <LHD>, the front power window motor (RH) <RHD> connector

Q:Is the check result normal?

YES : Go to Step 3.
NO : Repair the wiring harness.

STEP 3. Retest the system.

Check that the one-touch function works by means of the power window main switch.

Q:Is the check result normal?

YES : Intermittent malfunction (Refer to GROUP 00 - How to Use Troubleshooting/ Inspection Service Points - How to Cope with Intermittent Malfunction).
NO : Replace the power window main switch. Then go to Step 4.

STEP 4. Retest the system.

Check that the one-touch function works by means of the power window main switch.

Q:Is the check result normal?

YES : Intermittent malfunction (Refer to GROUP 00 - How to Use Troubleshooting/ Inspection Service Points - How to Cope with Intermittent Malfunction).
NO : Replace the power window motor.

Attached sheet 20

STEP 3. Check the front power window switch (passenger's side).
Check that the front power window switch (passenger's side) works normally (Refer to inspection).

Q: Is the check result normal?
YES : Go to Step 4.
NO : Replace the front power window switch (passenger's side).

<Deleted>

STEP 4. Check the front power window motor (RH).
Check that the front power window motor (RH) works normally (Refer to inspection).

Q: Is the check result normal?
YES : Go to Step 5.
NO : Replace the front power window motor (RH).

<Incorrect>

STEP 5. Check of short to power supply, short to ground, and open circuit in input and output line between front power window switch (passenger's side) connector and front power window motor (RH) connector.

Q: Is the check result normal?
YES : Go to Step 6.
NO : Repair the wiring harness.

<Correct>

STEP 6. Check of open circuit in ground line between front power window switch (passenger's side) connector and body ground.

Q: Is the check result normal?
YES : Go to Step 7.
NO : Repair the wiring harness.

STEP 7. Retest the system.
(1) Replace the front power window switch (passenger's side).
(2) Check that the front power window (RH) works by means of the front power window switch (passenger's side).

Q: Is the check result normal?
YES : The procedure is complete.
NO : Intermittent malfunction (Refer to GROUP 00 – How to Use Troubleshooting/Inspection Service Points - How to Cope with Intermittent Malfunction .)

YES : Intermittent malfunction (Refer to GROUP 00 — How to Use Troubleshooting/Inspection Service Points - How to Cope with Intermittent Malfunction .)
NO : Go to Step 1.

INSPECTION PROCEDURE 3: Front left power window does not work <Vehicles without driver's side auto down mechanism>

COMMENTS ON TROUBLE SYMPTOM

If the front power window (LH) does not work by means of the front power window switch (driver's side), the front power window switch (driver's side) or the front power window motor (LH) may be defective.

PROBABLE CAUSES

- Malfunction of the front power window switch (driver's side)
- Malfunction of the front power window motor (LH)
- Damaged harness wires and connectors

DIAGNOSIS

STEP 1. Voltage measurement at the front power window switch (driver's side) connector (power supply line).
(1) Disconnect the connector, and measure at the wiring harness side.
(2) Turn the ignition switch to the ON position.
(3) Check the voltage between the front power window switch (driver's side) connector (power supply line) connector (power supply line) and body ground.

OK: System voltage

Q: Is the check result normal?
YES : Go to Step 3.
NO : Go to Step 2.

Attached sheet 21

STEP 2. Check of short to power supply, short to ground, and open circuit in power supply line between intermediate connector and front power window switch (driver's side) connector.

Q: Is the check result normal?
YES : The trouble can be an intermittent malfunction (Refer to GROUP 00, How to use Troubleshooting/inspection Service Points – How to Cope with Intermittent Malfunction).
NO : Repair the wiring harness.

STEP 3. Check the front power window switch (driver's side).
Check that the front power window switch (driver's side) works normally (Refer to inspection).

Q: Is the check result normal?
YES : Go to Step 4.
NO : Replace the front power window switch (driver's side).

<Deleted>

STEP 4. Check the front power window motor (LH).
Check that the front power window motor (LH) works normally (Refer to inspection).

Q: Is the check result normal?
YES : Go to Step 5.
NO : Replace the front power window motor (LH).

<Incorrect>

STEP 5. Check of short to power supply, short to ground, and open circuit in input and output line between front power window switch (driver's side) connector and front power window motor (LH) connector.

Q: Is the check result normal?
YES : Go to Step 6.
NO : Repair the wiring harness.

STEP 6. Check of open circuit in ground line between front power window switch (driver's side) connector and body ground.

Q: Is the check result normal?
YES : Go to Step 7.
NO : Repair the wiring harness.

STEP 7. Retest the system.
(1) Replace the front power window switch (driver's side).
(2) Check that the front power window (LH) works by means of the front power window switch (driver's side).

Q: Is the check result normal?
YES : The procedure is complete.
NO : Intermittent malfunction (Refer to GROUP 00 – How to Use Troubleshooting/Inspection Service Points - How to Cope with Intermittent Malfunction .)

INSPECTION PROCEDURE 4: Driver's power window does not work by means of the power window main switch <Vehicles with driver's side auto down mechanism>.

⚠ CAUTION
Before replacing the ECU, ensure that the power supply circuit, the ground circuit and the communication circuit are normal.

COMMENTS ON TROUBLE SYMPTOM

If the driver's power window does not work by means of the power window main switch, a malfunction of the power window main switch or the front power window motor (driver's side) is suspected.

PROBABLE CAUSES

- Malfunction of the power window relay
- Malfunction of the power window main switch
- Malfunction of the front power window motor (driver's side)
- Damaged wiring harness and connectors

DIAGNOSIS

STEP 1. Check the power window main switch.
(1) Check that the power window lock switch is turned off.
(2) Check that the passenger's power window works by means of the power window main switch.

Q: Is the check result normal?
YES : Go to Step 2.
NO : Replace the power window main switch.

<Correct>

YES : Intermittent malfunction (Refer to GROUP 00 – How to Use Troubleshooting/Inspection Service Points - How to Cope with Intermittent Malfunction .)
NO : Go to Step 1.

Attached sheet 22

STEP 3. Check the front power window motor (LH)

Check that the front power window motor (LH) works normally. Refer to Power Window Motor Continuity Check .

Q: Is the check result normal?

YES : Go to Step 4.

NO : Replace the front power window motor (LH).

STEP 4. Voltage measurement at front power window sub switch connector (power supply line)

(1) Disconnect the connector, and measure at the wiring harness side.
(2) Turn the ignition switch to the ON position.
(3) Measure the voltage between the front power window sub switch connector (power supply line) and the body ground.

OK: System voltage

Q: Is the check result normal?

YES : Go to Step 6.

NO : Go to Step 5.

<Deleted>

STEP 5. Check of short to power supply, short to ground, and open circuit in power supply line between the front power window sub switch connector and the power window relay connector

Q: Is the check result normal?

YES : Intermittent malfunction (Refer to GROUP 00 – How to Use Troubleshooting/Inspection Service Points - How to Cope with Intermittent Malfunction).

NO : Repair the wiring harness.

STEP 6. Check of short to power supply, short to ground, and open circuit in input/output line between the front power window sub switch connector and the front power window motor (LH) connector

Q: Is the check result normal?

YES : Go to Step 7.

NO : Repair the wiring harness.

STEP 7. Retest the system.

(1) ~~Replace the front power window sub switch.~~
(2) Check that the front passenger's door power window can be operated by the front power window sub switch.

Q: Is the check result normal?

YES : The trouble can be an intermittent malfunction (Refer to GROUP 00, How to use Troubleshooting/inspection Service Points – How to Cope with Intermittent Malfunction).

<Incorrect>

NO : ~~Replace the front power window motor (passenger's side).~~

<Correct>

Go to Step 1

INSPECTION PROCEDURE 6: Front passenger's power window does not work by means of the power window main switch <Vehicles with driver's side auto down mechanism>.

COMMENTS ON TROUBLE SYMPTOM

If the front passenger's power window does not work by means of the power window main switch, the power window main switch or the respective power window sub switch may be defective.

PROBABLE CAUSES

- Malfunction of the power window main switch
- Malfunction of the front power window sub switch
- Damaged harness wires and connectors

DIAGNOSIS

STEP 1. Check the power window main switch.

Check that the driver's power window works by means of the power window main switch.

Q: Is the check result normal?

YES : Go to Step 2.

NO : Refer to inspection procedure 4 "Driver's power window does not work by means of the power window main switch ."

STEP 2. Check the power window sub switch.
Check that each power window works by means of the respective power window sub switch when the power window lock switch is turned off.

Q: Is the check result normal?
YES : Go to Step 3.
NO : Refer to inspection procedure 5 "Relevant power window does not work by means of the front passenger's power window sub switch ."

STEP 3. Check of short to power supply, short to ground, and open circuit in input/output line between power window main switch connector and front power window sub switch connector.

Q: Is the check result normal?
YES : Go to Step 4.
NO : Repair the wiring harness.

<Deleted>
STEP 4. Retest the system.
(1) Replace the front power window sub switch.
(2) Check that the front passenger's power window works by means of the power window main switch.

Q: Is the check result normal?
YES : Intermittent malfunction (Refer to GROUP 00, How to use Troubleshooting/inspection Service Points – How to Cope with Intermittent Malfunction).
NO : Replace the power window main switch.

INSPECTION PROCEDURE 7: Power window timer function does not work normally.

⚠ CAUTION
Before replacing the ECU, ensure that the power supply circuit, the ground circuit and the communication circuit are normal.

COMMENTS ON TROUBLE SYMPTOM
If the power window timer does not work normally, a malfunction of the power window main switch or ETACS-ECU is suspected.

PROBABLE CAUSES
- Malfunction of the door switch (Driver's side)
- Malfunction of the door switch (Front passenger's side)
- Malfunction of the power window main switch
- Malfunction of ETACS-ECU
- Damaged wiring harness and connectors

DIAGNOSIS
1. Check the power supply system.
2. Scan tool MB991958 data list
   - Turn the ignition switch to the ON position.
   - Close the driver's door.
   - Close the front passenger's door.
3. Retest the system.

<Added>

Trouble symptom	Inspection procedure number
Power window main switch one-touch does not work <Driver's side door>.	8

Attached sheet 24

TROUBLE SYMPTOM CHART <POWER WINDOW (Vehicles with safety system)>

M1429002801101

⚠ CAUTION

During diagnosis, a diagnostic trouble code associated with other system may be stored when the ignition switch is turned on with connector(s) disconnected. On completion, confirm all systems for diagnostic trouble code(s). If diagnostic trouble code(s) are stored, erase them all.

Trouble symptom	Inspection procedure number	Reference page
Power windows do not work at all.	1	
Driver's power window does not work by means of the power window main switch.	2	
Relevant power window(s) does not work by means of the front and rear passenger's power window sub switches.	3	
Front and/or rear passenger's power window(s) do not work by means of the power window main switch.	4	
Power window timer function does not work normally.	5	
Power window anti-trap function does not work normally <Driver's side door>.	6	
Window glass lowers automatically while it is rising <Driver's side door>.	7	

SYMPTOM PROCEDURES <POWER WINDOW (Vehicles with safety system)>

INSPECTION PROCEDURE 1: Power windows do not work at all.

⚠ CAUTION

Before replacing the ECU, ensure that the power supply circuit, the ground circuit and the communication circuit are normal.

COMMENTS ON TROUBLE SYMPTOM

If the power windows do not work at all, the power window relay or the ETACS-ECU may be defective.

PROBABLE CAUSES

- Malfunction of the power window relay
- Malfunction of ETACS-ECU
- Damaged wiring harness and connectors

DIAGNOSIS

STEP 1. Check the power supply system.

With the ignition switch in the LOCK (OFF) position, check if the following function operates normally:

- Hazard warning light

Q: Is the check result normal?

YES : Go to Step 2.

NO : Refer to GROUP 54A – Malfunction of ETACS-ECU Power Supply Circuit .

STEP 2. Using scan tool MB991958, DTC check.

Check that ETACS-ECU stores a diagnostic trouble code.

Q: Is the diagnostic trouble code stored?

YES : Refer to GROUP 54A – Diagnostic Trouble Code Chart .

NO : Go to Step 3.

STEP 3. Using scan tool MB991958, check data list.

Check the ETACS-ECU service item related to the power window.

Item No.	Item name	Normal condition
30	Ignition switch(IG1)	ON

OK: Normal condition is displayed.

Q: Is the check result normal?

YES : Go to Step 4.

NO : Refer to GROUP 54A – Inspection Procedure 2: The ignition switch (IG1) signal is not received .

TSB Revision

Attached sheet 25 (1/3)

STEP 8. Check of short to power supply, short to ground, and open circuit in input/output line between the front power window sub switch connector and the front power window motor (RH) connector

Q: Is the check result normal?
YES : Go to Step 9.
NO : Repair the wiring harness.

<Deleted>

STEP 9. Retest the system.

(1) Replace the front power window sub switch.
(2) Check that the front passenger's door power window can be operated by the front power window sub switch <Correct>

Go to Step 4.

Q: Is the check result normal?
YES : The trouble can be an intermittent malfunction (Refer to GROUP 00, How to use Troubleshooting/inspection Service Points – How to Cope with Intermittent Malfunction).
NO : Replace the front power window motor (passenger's side).

<Incorrect>

STEP 10. Check the rear power window sub switch (RH)

Check that the rear power window sub switch (RH) works normally. Refer to Power Window Sub Switch Continuity Check .

Q: Is the check result normal?
YES : Go to Step 11.
NO : Replace the rear power window sub switch (RH).

STEP 11. Check the rear power window motor (RH)

Check that the rear power window motor (RH) works normally. Refer to Power Window Motor Continuity Check .

Q: Is the check result normal?
YES : Go to Step 12.
NO : Replace the rear power window motor (RH).

STEP 12. Voltage measurement at rear power window sub switch (RH) connector (power supply line)

(1) Disconnect the connector, and measure at the wiring harness side.
(2) Turn the ignition switch to the ON position.
(3) Measure the voltage between the rear power window sub switch (RH) connector (power supply line) and the body ground.

OK: System voltage

Q: Is the check result normal?
YES : Go to Step 14.
NO : Go to Step 13.

STEP 13. Check of short to power supply, short to ground, and open circuit in power supply line between the rear power window sub switch (RH) connector and the power window relay connector

Q: Is the check result normal?
YES : Intermittent malfunction (Refer to GROUP 00 – How to Use Troubleshooting/Inspection Service Points - How to Cope with Intermittent Malfunction).
NO : Repair the wiring harness.

STEP 14. Check of short to power supply, short to ground, and open circuit in input/output line between the rear power window sub switch (RH) connector and the rear power window motor (RH) connector

Q: Is the check result normal?
YES : Go to Step 15.
NO : Repair the wiring harness.

<Deleted>

STEP 15. Retest the system.

(1) Replace the rear power window sub switch (RH).
(2) Check that the rear right door power window can be operated by the rear power window sub switch (RH).

Q: Is the check result normal?
YES : The trouble can be an intermittent malfunction (Refer to GROUP 00, How to use Troubleshooting/inspection Service Points – How to Cope with Intermittent Malfunction).
NO : Replace the rear power window motor (RH).

<Incorrect>

Go to Step 10. <Correct>

Attached sheet 25 (2/3)

STEP 16. Check the rear power window sub switch (LH)
Check that the rear power window sub switch (LH) works normally. Refer to Power Window Sub Switch Continuity Check .

Q: Is the check result normal?
YES : Go to Step 17.
NO : Replace the rear power window sub switch (LH).

STEP 17. Voltage measurement at rear power window sub switch (LH) connector (power supply line)
(1) Disconnect the connector, and measure at the wiring harness side.
(2) Turn the ignition switch to the ON position.
(3) Measure the voltage between the rear power window sub switch (LH) connector (power supply line) and the body ground.

OK: System voltage

Q: Is the check result normal?
YES : Go to Step 19.
NO : Go to Step 18.

<Old>

From attached sheet 25 (3/3)

STEP 18. Check of short to power supply, short to ground, and open circuit in power supply line between the rear power window sub switch (LH) connector and the power window relay connector

Q: Is the check result normal?
YES : Intermittent malfunction (Refer to GROUP 00 – How to Use Troubleshooting/Inspection Service Points - How to Cope with Intermittent Malfunction).
NO : Repair the wiring harness.

STEP 19. Check of short to power supply, short to ground, and open circuit in input/output line between the rear power window sub switch (LH) connector and the rear power window motor (LH) connector

Q: Is the check result normal?
YES : Go to Step 20.
NO : Repair the wiring harness.

STEP 20. Retest the system.
(1) Replace the rear power window sub switch (LH).
(2) Check that the rear left door power window can be operated by the rear power window sub switch (LH).

Q: Is the check result normal?
YES : The trouble can be an intermittent malfunction (Refer to GROUP 00, How to use Troubleshooting/inspection Service Points – How to Cope with Intermittent Malfunction).
NO : Replace the rear power window motor (LH).

INSPECTION PROCEDURE 4: Front and/or rear passenger's power window(s) do not work by means of the power window main switch.

COMMENTS ON TROUBLE SYMPTOM

If the passenger's and/or rear power window does not work by means of the power window main switch, the power window main switch or the respective power window sub switch(es) may be defective.

PROBABLE CAUSES

- Malfunction of the power window main switch
- Malfunction of the front power window sub switch, rear power window sub switch (RH) or rear power window sub switch (LH)
- Damaged harness wires and connectors

DIAGNOSIS

STEP 1. Check the power window main switch.
Check that the driver's power window works by means of the power window main switch.

Q: Is the check result normal?
YES : Go to Step 2.
NO : Refer to inspection procedure 2 "Driver's power window does not work by means of the power window main switch ."

To attached sheet 25 (2/3)

<New>

STEP 17. Check the rear power window motor (LH)
Check that the rear power window motor (LH) works normally. Refer to Power Window Motor Continuity Check.

Q: Is the check result normal?
YES : Go to Step 18.
NO : Replace the rear power window motor (LH).

STEP 18. Voltage measurement at rear power window sub switch (LH) connector (power supply line)
(1) Disconnect the connector, and measure at the wiring harness side.
(2) Turn the ignition switch to the ON position.
(3) Measure the voltage between the rear power window sub switch (LH) connector (power supply line) and the body ground.
OK: System voltage

Q: Is the check result normal?
YES : Go to Step 20.
NO : Go to Step 19.

STEP 19. Check of short to power supply, short to ground, and open circuit in power supply line between the rear power window sub switch (LH) connector and the power window relay connector

Q: Is the check result normal?
YES : Intermittent malfunction (Refer to GROUP 00 — How to Use Troubleshooting/Inspection Service Points - How to Cope with Intermittent Malfunction).
NO : Repair the wiring harness.

STEP 20. Check of short to power supply, short to ground, and open circuit in input/output line between the rear power window sub switch (LH) connector and the rear power window motor (LH) connector

Q: Is the check result normal?
YES : Go to Step 21.
NO : Repair the wiring harness.

STEP 21. Retest the system.
(1) Check that the rear left door power window can be operated by the rear power window sub switch (LH).

Q: Is the check result normal?
YES : The trouble can be an intermittent malfunction (Refer to GROUP 00, How to use Troubleshooting/inspection Service Points — How to Cope with Intermittent Malfunction).
NO : Go to Step 16.

Attached sheet 26

STEP 2. Check the power window sub switch.
Check that each power window works by means of the respective power window sub switch when the power window lock switch is turned off.

Q: Is the check result normal?
YES : Go to Step 3.
NO : Refer to inspection procedure 3 "Relevant power window(s) does not work by means of the front and rear passenger's power window sub switches ."

<Deleted>

STEP 3. Determine a trouble spot.

Q: Which power window does not work?
Front passenger's door : Go to Step 4.
Rear right door : Go to Step 6.
Rear left door : Go to Step 8.

STEP 4. Check of short to power supply, short to ground, and open circuit in input/output line between power window main switch connector and front power window sub switch connector.

Q: Is the check result normal?
YES : Go to Step 5.
NO : Repair the wiring harness.

<Deleted>

STEP 5. Retest the system.
(1) Replace the front power window sub switch.
(2) Check that the front passenger's power window works by means of the power window main switch.

<Deleted>

Q: Is the check result normal?
YES : Intermittent malfunction (Refer to GROUP 00, How to use Troubleshooting/inspection Service Points – How to Cope with Intermittent Malfunction).
NO : Replace the power window main switch.

STEP 6. Check of short to power supply, short to ground, and open circuit in input/output line between power window main switch connector and rear power window sub switch (RH) connector.

Q: Is the check result normal?
YES : Go to Step 7.
NO : Repair the wiring harness.

STEP 7. Retest the system.
(1) Replace the rear power window sub switch (RH).
(2) Check that the rear right power window works by means of the power window main switch.

Q: Is the check result normal?
YES : Intermittent malfunction (Refer to GROUP 00, How to use Troubleshooting/inspection Service Points – How to Cope with Intermittent Malfunction).
NO : Replace the power window main switch.

STEP 8. Check of short to power supply, short to ground, and open circuit in input/output line between power window main switch connector and rear power window sub switch (LH) connector.

Q: Is the check result normal?
YES : Go to Step 9.
NO : Repair the wiring harness.

STEP 9. Retest the system.
(1) Replace the rear power window sub switch (LH).
(2) Check that the rear left power window works by means of the power window main switch.

Q: Is the check result normal?
YES : Intermittent malfunction (Refer to GROUP 00, How to use Troubleshooting/inspection Service Points – How to Cope with Intermittent Malfunction).
NO : Replace the power window main switch.

INSPECTION PROCEDURE 5: Power window timer function does not work normally.

⚠ CAUTION
Before replacing the ECU, ensure that the power supply circuit, the ground circuit and the communication circuit are normal.

COMMENTS ON TROUBLE SYMPTOM

If the power window timer does not work normally, a malfunction of the power window main switch or ETACS-ECU is suspected.

Attached sheet 27 (1/4)

PROBABLE CAUSES

- Malfunction of the door switch (Driver's side)
- Malfunction of the door switch (Front passenger's side)
- Malfunction of the power window main switch
- Malfunction of ETACS-ECU
- Damaged wiring harness and connectors

DIAGNOSIS

1. Check the power supply system.
2. scan tool MB991958 data list
   - Turn the ignition switch to the ON position.
   - Close the driver's door.
   - Close the front passenger's door.
3. Retest the system.

INSPECTION PROCEDURE 6: Power window anti-trap function does not work normally <Driver's side door>.

<New> STEP 1.

⚠ CAUTION
Before replacing the ECU, ensure that the input and output signal circuits are normal.

COMMENTS ON TROUBLE SYMPTOM

Malfunction of the power window motor revolution detection sensor or incorrectly installed or warped glass slider is suspected.

PROBABLE CAUSES

- Malfunction of the power window motor
- Incorrectly installed or warped glass slider
- Improperly adjusted door window glass

<New>

DIAGNOSIS

<Old> STEP 2.

~~STEP 1.~~ Check of short to power supply, short to ground, and open circuit in VCC, SEN1, SEN2, SGND line between the power window main switch connector and the front power window motor ~~(RH)~~ connector

<New>
<Incorrect> <Old>

Q: Is the check result normal?
YES : ~~Go to Step 2.~~ Go to Step 3.
NO : Repair the wiring harness.

(LH) <Correct>

<Old>

~~STEP 2.~~ Check the power window fully closed position

(1) Carry out the learning procedures of the power window fully closed position. Refer to .
(2) Fully open the door window glass. Operate the power window switch to fully close the door window glass, and check if the door window glass raise without lowering automatically.

<Old> <New>

Q: Is the check result normal?
YES : ~~Go to Step 3.~~ Go to Step 2.
NO : Refer to adjustment of faulty power window .

STEP 3. Retest the system.

Check that the power window anti-trap function works.

Q: Is the check result normal?
YES : Intermittent malfunction (Refer to GROUP 00 – How to Use Troubleshooting/Inspection Service Points - How to Cope with Intermittent Malfunction).
NO : Replace the power window motor of the door which the power window anti-trap function does not work on.

INSPECTION PROCEDURE 7: Window glass lowers automatically while it is rising <Driver's side door>.

<Old>

From attached sheet 27 (3/4)

~~COMMENTS ON TROUBLE SYMPTOM~~

~~If the sliding resistance is too great when the window is being raised or the window glass encounters an object, the window glass will lower by approximately 150 mm (5.9 inches).~~

TSB Revision

Attached sheet 27 (2/4)

<Old>

From attached sheet 27 (3/4)

PROBABLE CAUSES

- Improperly adjusted door window glass
- Incorrectly installed or warped glass slider
- Malfunction of the power window motor
- Malfunction of the window regulator

DIAGNOSIS

1. Check that the door window glasses are installed correctly.
2. Retest the system.

From attached sheet 27 (4/4)

CHECK AT ECU TERMINAL <POWER WINDOW (Vehicles with safety system)>

M1429013600841

POWER WINDOW MAIN SWITCH TERMINAL CHECK

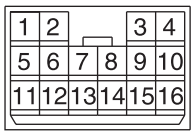

ACB04990AB

Terminal No.	Terminal code	Check items	Check conditions	Normal conditions
1	D. AS	Output to power window motor (Passenger's side)	–	–
2	U. AS	Output to power window motor (Passenger'side)	–	–
3	MD	Output to power window motor (Driver's side)	–	–
4	MU	Output to power window motor (Driver's side)	–	–
5	+BP	Power supply	Always	System voltage
6	SEN1	Input from power window motor (pulse sensor signal)	When the power windows are operating	0 to 5 V (pulse signal)
7	SGND	Input from power window motor (pulse sensor earth)	–	1 V or less
8	E	Earth	Always	1 V or less
9	VCC	Input from power window motor (power supply to pulse sensor)	When the power windows are operating	5 V
10	+B	Power supply	Ignition switch: ON	System voltage
11	D. RR	Output to power window motor (Rear right side)	–	–
12	U. RR	Output to power window motor (Rear right side)	–	–
13	SEN2	Input from power window motor (pulse sensor signal)	When the power windows are operating	0 to 5 V (pulse signal)
14	–	–	–	–
15	D. RL	Output to power window motor (Rear left side)	–	–

To attached sheet 27 (1/4, 2/4)

Attached sheet 27 (3/4)

<New>

CAUTION
Before replacing the ECU, ensure that the input and output signal circuits are normal.

COMMENTS ON TROUBLE SYMPTOM
If the sliding resistance is too great when the window is being raised or the window glass encounters an object, the window glass will lower by approximately 150 mm.

PROBABLE CAUSES
- Improperly adjusted door window glass
- Incorrectly installed or warped glass slider
- Damaged harness wires and connectors
- Malfunction of the power window motor
- Malfunction of the window regulator

DIAGNOSIS PROCEDURE

STEP 1. Check the power window fully closed position
(1)Carry out the learning procedures of the power window fully closed position. Refer to.
(2)Fully open the door window glass. Operate the power window switch to fully close the door window glass, and check if the door window glass raise without lowering automatically.

Q:Is the check result normal?
YES : Go to Step 2.
NO : Refer to adjustment of faulty power window.

STEP 2. Check of short to power supply, short to ground, and open circuit in VCC, SEN1, SEN2, SGND line between the power window main switch connector and the front power window motor (LH) connector
Q:Is the check result normal?
YES : Go to Step 3.
NO : Repair the wiring harness.

STEP 3. Retest the system.
Fully open the door window glass. Operate the power window switch to fully close the door window glass, and check if the door window glass raise without lowering automatically.

Q:Is the check result normal?
YES : Intermittent malfunction (Refer to GROUP 00 - How to Use Troubleshooting/ Inspection Service Points - How to Cope with Intermittent Malfunction).
NO : Adjustment of faulty power window (Refer to) and carry out the learning procedures of the power window fully closed position (Refer to). Then go to Step 4.

STEP 4. Retest the system.
Fully open the door window glass. Operate the power window switch to fully close the door window glass, and check if the door window glass raise without lowering automatically.

Q:Is the check result normal?
YES : Intermittent malfunction (Refer to GROUP 00 - How to Use Troubleshooting/ Inspection Service Points - How to Cope with Intermittent Malfunction).
NO : Replace the power window motor.

To attached sheet 27 (2/4)

<Added>

INSPECTION PROCEDURE 8: Power window main switch one-touch function does not work <Driver's side door>.

CAUTION

Before replacing the ECU, ensure that the input and output signal circuits are normal.

COMMENTS ON TROUBLE SYMPTOM

Malfunction of the power window motor revolution detection sensor or power window main switch.

PROBABLE CAUSES

- Malfunction of the power window main switch
- Damaged harness wires and connectors
- Malfunction of the power window motor

DIAGNOSIS PROCEDURE

STEP 1. Check the power window fully closed position

(1)Carry out the learning procedures of the power window fully closed position (Refer to).
(2)Check that the one-touch function works by means of the power window main switch.

Q:Is the check result normal?

YES : Go to Step 2.
NO : Refer to adjustment of faulty power window.

STEP 2. Check of short to power supply, short to ground, and open circuit in VCC, SEN1, SEN2, SGND line between the power window main switch connector and the front power window motor (LH) connector

Q:Is the check result normal?

YES : Go to Step 3.
NO : Repair the wiring harness.

STEP 3. Retest the system.

Check that the one-touch function works by means of the power window main switch.

Q:Is the check result normal?

YES : Intermittent malfunction (Refer to GROUP 00 - How to Use Troubleshooting/ Inspection Service Points - How to Cope with Intermittent Malfunction).
NO : Replace the power window main switch. Then go to Step 4.

STEP 4. Retest the system.

Check that the one-touch function works by means of the power window main switch.

Q:Is the check result normal?

YES : Intermittent malfunction (Refer to GROUP 00 - How to Use Troubleshooting/ Inspection Service Points - How to Cope with Intermittent Malfunction).
NO : Replace the power window motor.

Attached sheet 28

STEP 2. M.U.T.-III data list

Check the signals related to the ignition key reminder function operation.

- Open the driver's door.
- Change the status of driver's door from unlocked to locked.
- Ignition switch: "LOCK" (OFF) (key inserted)

Item No.	Item name	Normal condition
19	Driver's door switch	ON
20	Driver's door unlock switch	ON → OFF
21	Driver's door lock switch	OFF → ON
28	Steering lock switch	OFF

OK: Normal conditions are displayed for all the items.

Q: Are the check result normal?

Normal conditions are displayed for all the items. : Go to Step 3.

Normal condition is not displayed for item No. 19. : Refer to GROUP 54A – Inspection Procedure 5 "The front door switch (driver's side) signal is not received. ".

Normal condition is not displayed for item No. 20, 21. : Refer to GROUP 54A – Inspection Procedure 4 "The front door lock actuator (driver's side) signal is not received. ".

Normal condition is not displayed for item No. 270 or 271. : Refer to GROUP 54A – Inspection Procedure 3 "The key reminder switch signal is not received. ".

STEP 3. Retest the system.

Q: Does the ignition key reminder function work normally?

YES : The trouble can be an intermittent malfunction (Refer to GROUP 00, How to use Troubleshooting/inspection Service Points – How to Cope with Intermittent Malfunction).

NO : Replace the ETACS-ECU.

TROUBLE SYMPTOM CHART <POWER WINDOW>

M1429002801190

⚠ CAUTION

During diagnosis, a diagnosis code associated with other system may be stored when the ignition switch is turned on with connector(s) disconnected. On completion, confirm all systems for diagnosis code(s). If diagnosis code(s) are stored, erase them all.

Trouble symptom	Inspection procedure number	Reference page
Power windows do not work at all.	1	
Driver's power window does not work by means of the power window main switch.	2	
Relevant power window(s) does not work by means of the front and rear passenger's power window sub switches.	3	
Front and/or rear passenger's power window(s) do not work by means of the power window main switch.	4	
Power window timer function does not work normally.	5	
Power window anti-trap function does not work normally <Driver's side door>.	6	
Window glass lowers automatically while it is rising <Driver's side door>.	7	

Trouble symptom	Inspection procedure number
Power window main switch one-touch does not work <Driver's side door>.	8

<Added>

Attached sheet 29 (1/3)

window sub switch connector (power supply line) and the body earth.

OK: System voltage

Q: Is the check result normal?
YES : Go to Step 8.
NO : Go to Step 7.

STEP 7. Check of short to power supply, short to earth, and open circuit in power supply line between the front power window sub switch connector and the power window relay connector

Q: Is the check result normal?
YES : Intermittent malfunction (Refer to GROUP 00 – How to Use Troubleshooting/ Inspection Service Points - How to Cope with Intermittent Malfunction).
NO : Repair the wiring harness.

STEP 8. Check of short to power supply, short to earth, and open circuit in input/output line between the front power window sub switch connector and the front power window motor (RH) connector

Q: Is the check result normal?
YES : Go to Step 9.
NO : Repair the wiring harness.

<Deleted>

STEP 9. Retest the system.
(1) Replace the front power window sub switch.
(2) Check that the front passenger's door power window can be operated by the front power window sub switch.

<Correct> Go to Step 4.

Q: Is the check result normal?
YES : The trouble can be an intermittent malfunction (Refer to GROUP 00, How to use Troubleshooting/inspection Service Points – How to Cope with Intermittent Malfunction).
NO : Replace the front power window motor (passenger's side).

<Incorrect>

STEP 10. Check the rear power window sub switch (RH)
Check that the rear power window sub switch (RH) works normally. Refer to Power Window Sub Switch Continuity Check .

Q: Is the check result normal?
YES : Go to Step 11.
NO : Replace the rear power window sub switch (RH).

STEP 11. Check the rear power window motor (RH)
Check that the rear power window motor (RH) works normally. Refer to Power Window Motor Continuity Check .

Q: Is the check result normal?
YES : Go to Step 12.
NO : Replace the rear power window motor (RH).

STEP 12. Voltage measurement at rear power window sub switch (RH) connector (power supply line)
(1) Disconnect the connector, and measure at the wiring harness side.
(2) Turn the ignition switch to the ON position.
(3) Measure the voltage between the rear power window sub switch (RH) connector (power supply line) and the body earth.

OK: System voltage

Q: Is the check result normal?
YES : Go to Step 14.
NO : Go to Step 13.

STEP 13. Check of short to power supply, short to earth, and open circuit in power supply line between the rear power window sub switch (RH) connector and the power window relay connector

Q: Is the check result normal?
YES : Intermittent malfunction (Refer to GROUP 00 – How to Use Troubleshooting/ Inspection Service Points - How to Cope with Intermittent Malfunction).
NO : Repair the wiring harness.

STEP 14. Check of short to power supply, short to earth, and open circuit in input/output line between the rear power window sub switch (RH) connector and the rear power window motor (RH) connector

Q: Is the check result normal?
YES : Go to Step 15.
NO : Repair the wiring harness.

<Deleted>

STEP 15. Retest the system.
(1) Replace the rear power window sub switch (RH).
(2) Check that the rear right door power window can be operated by the rear power window sub switch (RH).

Q: Is the check result normal?

<Correct> Go to Step 10.

Attached sheet 29 (2/3)

YES : The trouble can be an intermittent malfunction (Refer to GROUP 00, How to use Troubleshooting/inspection Service Points – How to Cope with Intermittent Malfunction).
NO : Replace the rear power window motor (RH).

<Incorrect>

STEP 16. Check the rear power window sub switch (LH)
Check that the rear power window sub switch (LH) works normally. Refer to Power Window Sub Switch Continuity Check .

Q: Is the check result normal?
YES : Go to Step 17.
NO : Replace the rear power window sub switch (LH).

STEP 17. Voltage measurement at rear power window sub switch (LH) connector (power supply line)
(1) Disconnect the connector, and measure at the wiring harness side.
(2) Turn the ignition switch to the ON position.
(3) Measure the voltage between the rear power window sub switch (LH) connector (power supply line) and the body earth.

OK: System voltage

Q: Is the check result normal?
YES : Go to Step 19.
NO : Go to Step 18.

<Old>

From attached sheet 29 (3/3)

STEP 18. Check of short to power supply, short to earth, and open circuit in power supply line between the rear power window sub switch (LH) connector and the power window relay connector

Q: Is the check result normal?
YES : Intermittent malfunction (Refer to GROUP 00 – How to Use Troubleshooting/ Inspection Service Points - How to Cope with Intermittent Malfunction).
NO : Repair the wiring harness.

STEP 19. Check of short to power supply, short to earth, and open circuit in input/output line between the rear power window sub switch (LH) connector and the rear power window motor (LH) connector

Q: Is the check result normal?
YES : Go to Step 20.
NO : Repair the wiring harness.

STEP 20. Retest the system.
(1) Replace the rear power window sub switch (LH).
(2) Check that the rear left door power window can be operated by the rear power window sub switch (LH).

Q: Is the check result normal?
YES : The trouble can be an intermittent malfunction (Refer to GROUP 00, How to use Troubleshooting/inspection Service Points – How to Cope with Intermittent Malfunction).
NO : Replace the rear power window motor (LH).

INSPECTION PROCEDURE 4: Front and/or rear passenger's power window(s) do not work by means of the power window main switch.

COMMENTS ON TROUBLE SYMPTOM
If the passenger's and/or rear power window does not work by means of the power window main switch, the power window main switch or the respective power window sub switch(es) may be defective.

PROBABLE CAUSES
- Malfunction of the power window main switch
- Malfunction of the front power window sub switch, rear power window sub switch (RH) or rear power window sub switch (LH)
- Damaged harness wires and connectors

DIAGNOSIS PROCEDURE

STEP 1. Check the power window main switch.
Check that the driver's power window works by means of the power window main switch.

Q: Is the check result normal?
YES : Go to Step 2.
NO : Refer to inspection procedure 2 "Driver's power window does not work by means of the power window main switch ."

To attached sheet 29 (2/3)

<New>

STEP 17. Check the rear power window motor (LH)
Check that the rear power window motor (LH) works normally. Refer to Power Window Motor Continuity Check.

Q: Is the check result normal?
YES : Go to Step 18.
NO : Replace the rear power window motor (LH).

STEP 18. Voltage measurement at rear power window sub switch (LH) connector (power supply line)
(1) Disconnect the connector, and measure at the wiring harness side.
(2) Turn the ignition switch to the ON position.
(3) Measure the voltage between the rear power window sub switch (LH) connector (power supply line) and the body earth.
OK: System voltage

Q: Is the check result normal?
YES : Go to Step 20.
NO : Go to Step 19.

STEP 20. Check of short to power supply, short to earth, and open circuit in power supply line between the rear power window sub switch (LH) connector and the power window relay connector

Q: Is the check result normal?
YES : Intermittent malfunction (Refer to GROUP 00 — How to Use Troubleshooting/Inspection Service Points - How to Cope with Intermittent Malfunction).
NO : Repair the wiring harness.

STEP 21. Check of short to power supply, short to earth, and open circuit in input/output line between the rear power window sub switch (LH) connector and the rear power window motor (LH) connector

Q: Is the check result normal?
YES : Go to Step 22.
NO : Repair the wiring harness.

STEP 22. Retest the system.
(1) Check that the rear left door power window can be operated by the rear power window sub switch (LH).

Q: Is the check result normal?
YES : The trouble can be an intermittent malfunction (Refer to GROUP 00, How to use Troubleshooting/inspection Service Points — How to Cope with Intermittent Malfunction).
NO : Go to Step 16.

Attached sheet 30

STEP 2. Check the power window sub switch.
Check that each power window works by means of the respective power window sub switch when the power window lock switch is turned off.

Q: Is the check result normal?
YES : Go to Step 3.
NO : Refer to inspection procedure 3 "Relevant power window(s) does not work by means of the front and rear passenger's power window sub switches ."

<Deleted>

STEP 3. Determine a trouble spot.

Q: Which power window does not work?
Front passenger's door : Go to Step 4.
Rear right door : Go to Step 6.
Rear left door : Go to Step 8.

STEP 4. Check of short to power supply, short to earth, and open circuit in input/output line between power window main switch connector and front power window sub switch connector.

Q: Is the check result normal?
YES : Go to Step 5.
NO : Repair the wiring harness.

<Deleted>

STEP 5. Retest the system.
(1) Replace the front power window sub switch.
(2) Check that the front passenger's power window works by means of the power window main switch.

<Deleted>

Q: Is the check result normal?
YES : Intermittent malfunction (Refer to GROUP 00, How to use Troubleshooting/inspection Service Points – How to Cope with Intermittent Malfunction).
NO : Replace the power window main switch.

STEP 6. Check of short to power supply, short to earth, and open circuit in input/output line between power window main switch connector and rear power window sub switch (RH) connector.

Q: Is the check result normal?
YES : Go to Step 7.
NO : Repair the wiring harness.

STEP 7. Retest the system.
(1) Replace the rear power window sub switch (RH).
(2) Check that the rear right power window works by means of the power window main switch.

Q: Is the check result normal?
YES : Intermittent malfunction (Refer to GROUP 00, How to use Troubleshooting/inspection Service Points – How to Cope with Intermittent Malfunction).
NO : Replace the power window main switch.

STEP 8. Check of short to power supply, short to earth, and open circuit in input/output line between power window main switch connector and rear power window sub switch (LH) connector.

Q: Is the check result normal?
YES : Go to Step 9.
NO : Repair the wiring harness.

STEP 9. Retest the system.
(1) Replace the rear power window sub switch (LH).
(2) Check that the rear left power window works by means of the power window main switch.

Q: Is the check result normal?
YES : Intermittent malfunction (Refer to GROUP 00, How to use Troubleshooting/inspection Service Points – How to Cope with Intermittent Malfunction).
NO : Replace the power window main switch.

INSPECTION PROCEDURE 5: Power window timer function does not work normally.

⚠ CAUTION
Before replacing the ECU, ensure that the power supply circuit, the earth circuit and the communication circuit are normal.

COMMENTS ON TROUBLE SYMPTOM
If the power window timer does not work normally, a malfunction of the power window main switch or ETACS-ECU is suspected.

PROBABLE CAUSES
- Malfunction of the door switch (Driver's side)
- Malfunction of the door switch (Front passenger's side)
- Malfunction of the power window main switch
- Malfunction of ETACS-ECU

Attached sheet 31 (1/3)

- Damaged wiring harness and connectors

DIAGNOSIS PROCEDURE

1. Check the power supply system.

2. M.U.T.-III data list
   - Turn the ignition switch to the ON position.
   - Close the driver's door.
   - Close the front passenger's door.
3. Retest the system.

INSPECTION PROCEDURE 6: Power window anti-trap function does not work normally <Driver's side door>.

<New> STEP 1. <Old>

⚠ CAUTION
Before replacing the ECU, ensure that the input and output signal circuits are normal.

COMMENTS ON TROUBLE SYMPTOM
Malfunction of the power window motor revolution detection sensor or incorrectly installed or warped glass slider is suspected.

PROBABLE CAUSES
- Malfunction of the power window motor
- Incorrectly installed or warped glass slider
- Improperly adjusted door window glass

DIAGNOSIS PROCEDURE

<Old> STEP 2. <New>

~~STEP 1.~~ Check of short to power supply, short to earth, and open circuit in VCC, SEN1, SEN2, SGND line between the power window main switch connector and the front power window motor (RH) connector

<Incorrect> <Old> <New>

Q: Is the check result normal?
YES : ~~Go to Step 2.~~ Go to Step 3.
NO : Repair the wiring harness.

(LH) <Correct>

~~STEP 2.~~ Check the power window fully closed position
(1) Carry out the learning procedures of the power window fully closed position. Refer to .
(2) Fully open the door window glass. Operate the power window switch to fully close the door window glass, and check if the door window glass raise without lowering automatically.

<Old> <New>

Q: Is the check result normal?
YES : ~~Go to Step 3.~~ Go to Step 2.
NO : Refer to adjustment of faulty power window .

STEP 3. Retest the system.
Check that the power window anti-trap function works.

Q: Is the check result normal?
YES : Intermittent malfunction (Refer to GROUP 00 – How to Use Troubleshooting/ Inspection Service Points - How to Cope with Intermittent Malfunction).
NO : Replace the power window motor of the door which the power window anti-trap function does not work on.

INSPECTION PROCEDURE 7: Window glass lowers automatically while it is rising <Driver's side door>.

COMMENTS ON TROUBLE SYMPTOM
If the sliding resistance is too great when the window is being raised or the window glass encounters an object, the window glass will lower by approximately 150 mm.

PROBABLE CAUSES
- Improperly adjusted door window glass
- Incorrectly installed or warped glass slider
- Malfunction of the power window motor
- Malfunction of the window regulator

DIAGNOSIS PROCEDURE

1. Check that the door window glasses are installed correctly.
2. Retest the system.

<Old>

From attached sheet 31 (3/3)

From attached sheet 31 (2/3)

To attached sheet 31 (1/3)

<New>

CAUTION
Before replacing the ECU, ensure that the input and output signal circuits are normal.

COMMENTS ON TROUBLE SYMPTOM
If the sliding resistance is too great when the window is being raised or the window glass encounters an object, the window glass will lower by approximately 150 mm.

PROBABLE CAUSES
- Improperly adjusted door window glass
- Incorrectly installed or warped glass slider
- Damaged harness wires and connectors
- Malfunction of the power window motor
- Malfunction of the window regulator

DIAGNOSIS PROCEDURE

STEP 1. Check the power window fully closed position
(1)Carry out the learning procedures of the power window fully closed position. Refer to.
(2)Fully open the door window glass. Operate the power window switch to fully close the door window glass, and check if the door window glass raise without lowering automatically.

Q:Is the check result normal?
YES : Go to Step 2.
NO : Refer to adjustment of faulty power window.

STEP 2. Check of short to power supply, short to earth, and open circuit in VCC, SEN1, SEN2, SGND line between the power window main switch connector and the front power window motor (LH) connector
Q:Is the check result normal?
YES : Go to Step 3.
NO : Repair the wiring harness.

STEP 3. Retest the system.
Fully open the door window glass. Operate the power window switch to fully close the door window glass, and check if the door window glass raise without lowering automatically.

Q:Is the check result normal?
YES : Intermittent malfunction (Refer to GROUP 00 - How to Use Troubleshooting/ Inspection Service Points - How to Cope with Intermittent Malfunction).
NO : Adjustment of faulty power window (Refer to) and carry out the learning procedures of the power window fully closed position (Refer to). Then go to Step 4.

STEP 4. Retest the system.
Fully open the door window glass. Operate the power window switch to fully close the door window glass, and check if the door window glass raise without lowering automatically.

Q:Is the check result normal?
YES : Intermittent malfunction (Refer to GROUP 00 - How to Use Troubleshooting/ Inspection Service Points - How to Cope with Intermittent Malfunction).
NO : Replace the power window motor.

To attached sheet 31 (1/3)

<Added>

INSPECTION PROCEDURE 8: Power window main switch one-touch function does not work <Driver's side door>.

CAUTION

Before replacing the ECU, ensure that the input and output signal circuits are normal.

COMMENTS ON TROUBLE SYMPTOM

Malfunction of the power window motor revolution detection sensor or power window main switch.

PROBABLE CAUSES

- Malfunction of the power window main switch
- Damaged harness wires and connectors
- Malfunction of the power window motor

DIAGNOSIS PROCEDURE

STEP 1. Check the power window fully closed position

(1)Carry out the learning procedures of the power window fully closed position (Refer to).
(2)Check that the one-touch function works by means of the power window main switch.

Q:Is the check result normal?

YES : Go to Step 2.
NO : Refer to adjustment of faulty power window.

STEP 2. Check of short to power supply, short to earth, and open circuit in VCC, SEN1, SEN2, SGND line between the power window main switch connector and the front power window motor (LH) connector

Q:Is the check result normal?

YES : Go to Step 3.
NO : Repair the wiring harness.

STEP 3. Retest the system.

Check that the one-touch function works by means of the power window main switch.

Q:Is the check result normal?

YES : Intermittent malfunction (Refer to GROUP 00 - How to Use Troubleshooting/ Inspection Service Points - How to Cope with Intermittent Malfunction).
NO : Replace the power window main switch. Then go to Step 4.

STEP 4. Retest the system.

Check that the one-touch function works by means of the power window main switch.

Q:Is the check result normal?

YES : Intermittent malfunction (Refer to GROUP 00 - How to Use Troubleshooting/ Inspection Service Points - How to Cope with Intermittent Malfunction).
NO : Replace the power window motor.

Attached sheet 32

DOOR TRIM

REMOVAL AND INSTALLATION

M1521006401517

Post-installation Operation
- Door Inside Handle Knob Play Check (Refer to GROUP 42A, Door Inside Handle Check).

Learning Procedures of Power Window Fully Closed Position (Refer to GROUP 42A, ON-Vehicle service). <Vehicles with safety system (driver's door)>

<Added>

<Front door trim>

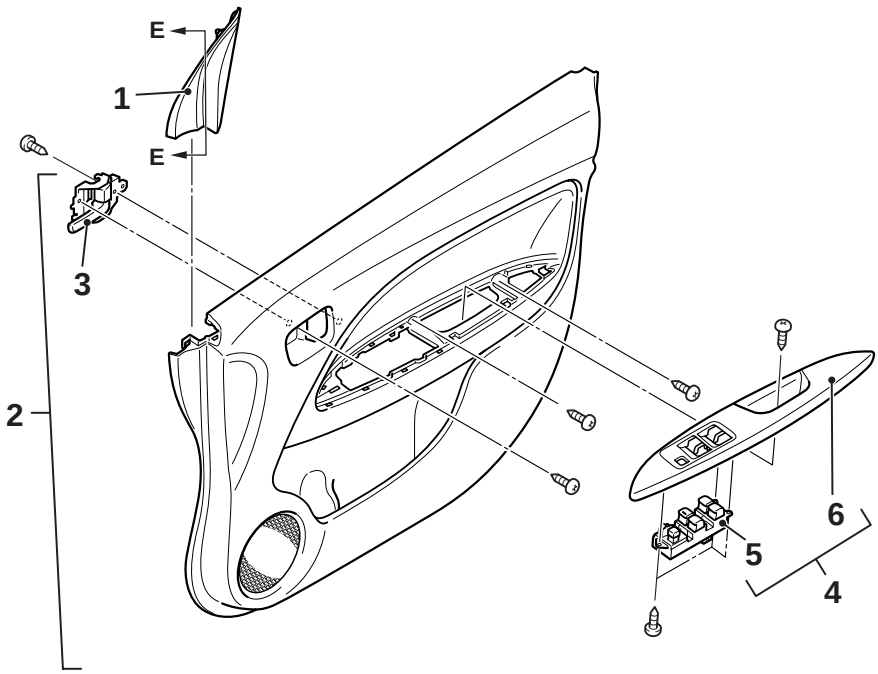

ACB03586 AB

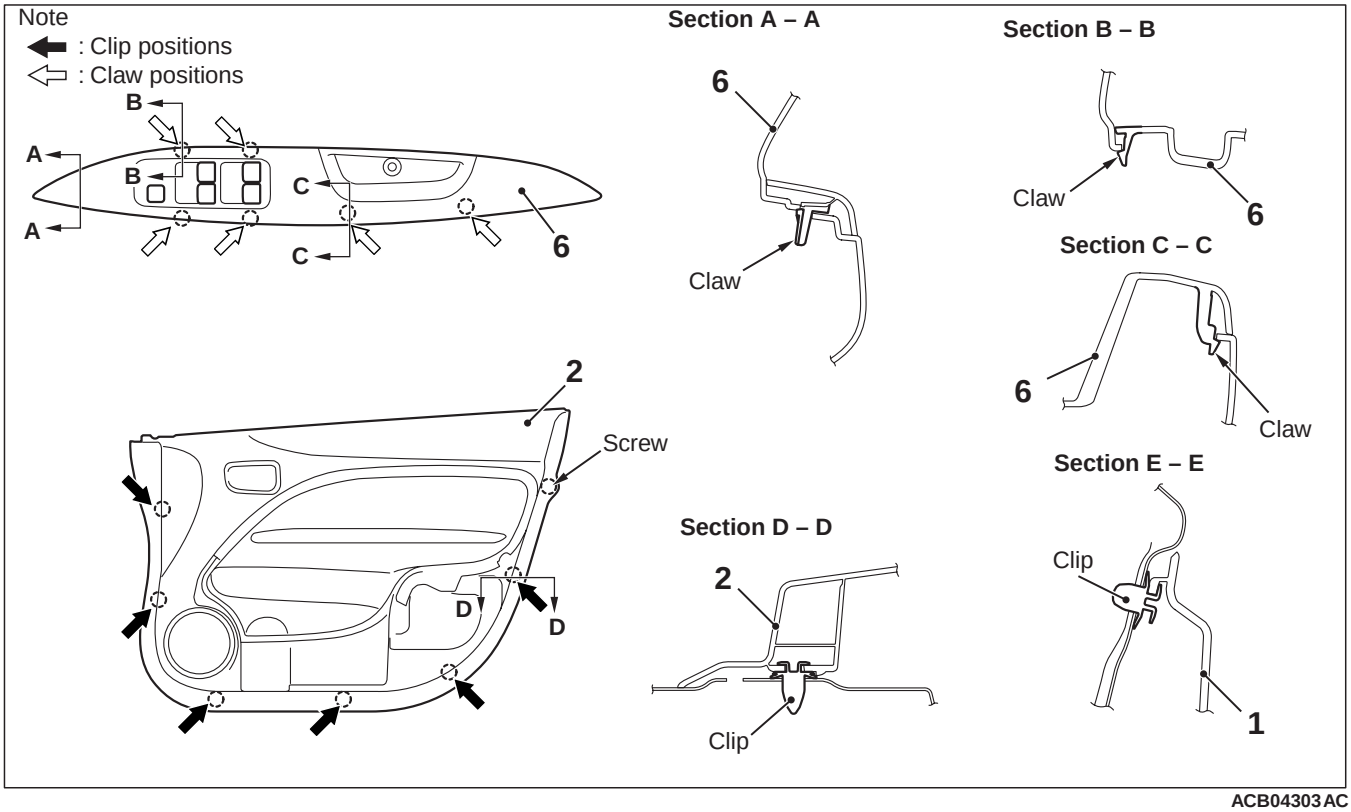

ACB04303 AC

Attached sheet 33

DOOR TRIM

REMOVAL AND INSTALLATION

M1521006401551

Post-installation Operation
- Door Inside Handle Knob Play Check (Refer to GROUP 42A, Door Inside Handle Check).

Learning Procedures of Power Window Fully Closed Position (Refer to GROUP 42A, ON-Vehicle service). <Vehicles with safety system (driver's door)>

<Front door trim>

<Added>

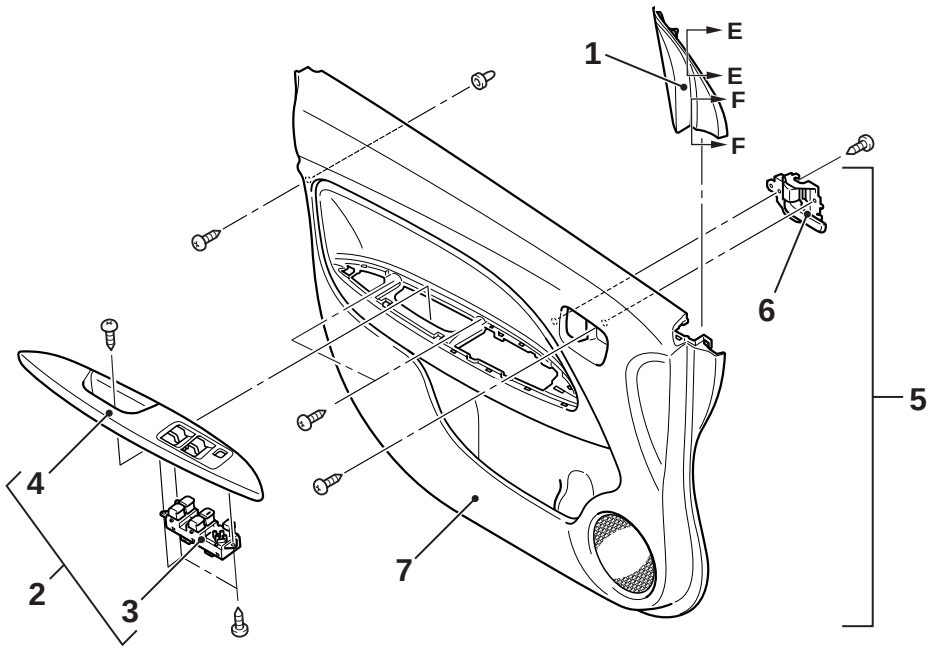

ACC03282AB

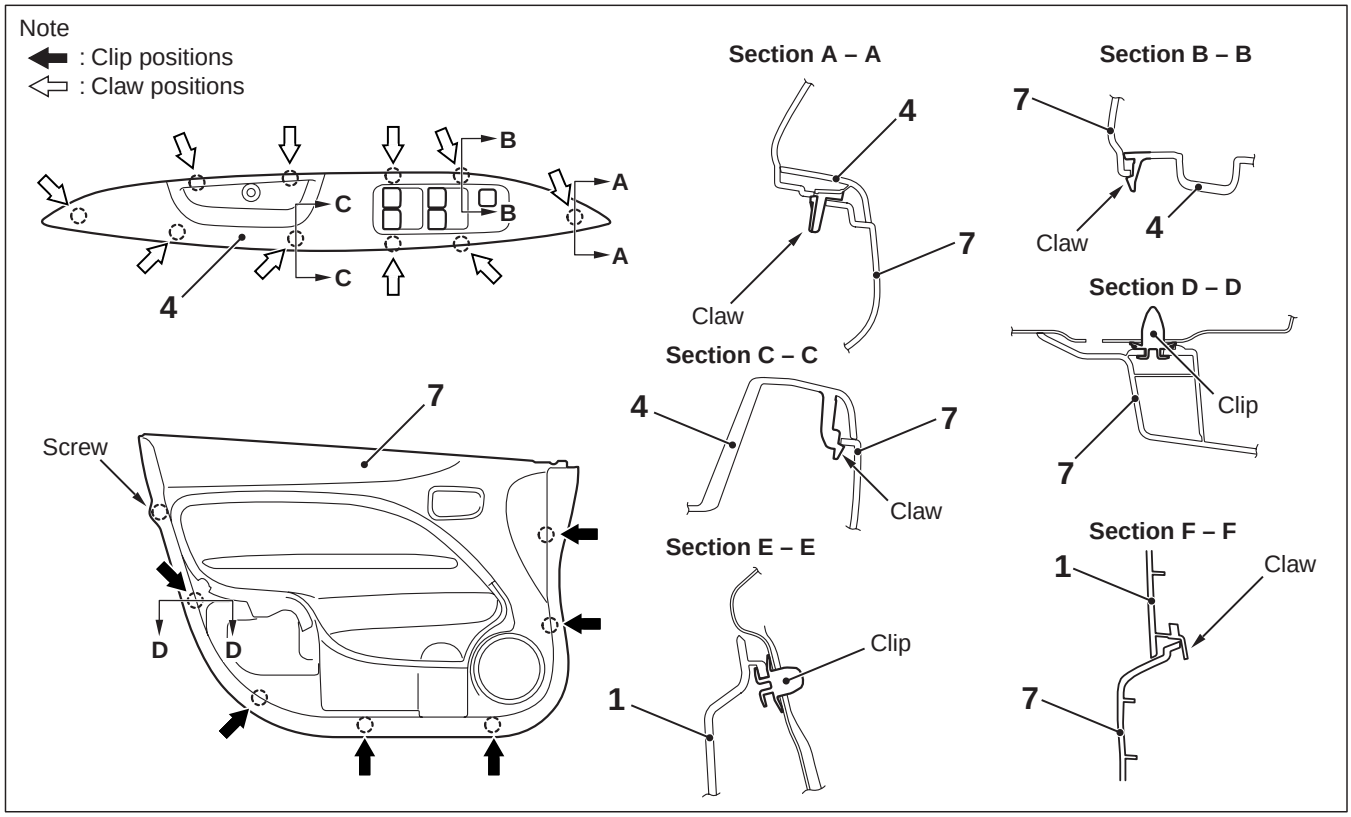

ACC03283AB