MITSUBISHI MOTORS

SERVICE BULLETIN

GLOBAL AFTER SALES OFFICE, MITSUBISHI MOTORS CORPORATION

PURPOSE : CORRECTION	ISSUE NO. : MSB-14EXML00_23_42-501	DATE : 2014-06-25
SUBJECT : ERRORS IN WRITING IN THE GROUPS OF 00,23A, AND 42B		<DESTINATION/MODEL> (As shown below) <M/Y> 13-15
GROUP : GENERAL(Gr:00)/AUTOMATIC TRANSMISSION(Gr:23A)/BODY(Gr:42B)		MIRAGE/SPACE STAR(A03A)

1. Description :

Please refer to the attached document for the correction of the error in writing existing in the applicable service manual.

2. Affected service manuals :

For G.EXP/GCC/ASEAN

Applicable manual	Pub. No.	Applicable title (INFO ID)	Contents
2013 SPACE STAR Workshop Manual	PWFE1201R	DISASSEMBLY AND REASSEMBLY M233-20-801-04300-01	Attached sheet 2

For EU

Applicable manual	Pub. No.	Applicable title (INFO ID)	Contents
2013 SPACE STAR Workshop Manual	CA0E13E1-CD(Eng) CA0F13E1-CD(Fra) CA0G13E1-CD(Ger) CA0S13E1-CD(Spa) CA0I13E1-CD(Ita)	DISASSEMBLY AND REASSEMBLY (M233-20-801-09801-01)	Attached sheet 2
2014 SPACE STAR Workshop Manual	CA1E14E1-CD(Eng) CA1F14E1-CD(Fra) CA1G14E1-CD(Ger) CA1S14E1-CD(Spa) CA1I14E1-CD(Ita)	DISASSEMBLY AND REASSEMBLY M233-20-801-12800-01	Attached sheet 2
2015 SPACE STAR Workshop Manual	CA0E15E1-CD(Eng) CA0S15E1-CD(Spa) CA0F15E1-CD(Fra) CA0G15E1-CD(Ger) CA0I15E1-CD(Ita)	CODING LIST (M001-01-502-69800-01)	Attached sheet 1
		DISASSEMBLY AND REASSEMBLY (M233-20-801-09801-01)	Attached sheet 2
		DATA LIST REFERENCE TABLE (M429-60-500-44800-01)	Attached sheet 3

For MMNA

Applicable manual	Pub. No.	Applicable title (INFO ID)	Contents
2014 MIRAGE Service Manual	MSCD-016B-2014	DISASSEMBLY AND REASSEMBLY M233-20-801-04300-01	Attached sheet 2

3. About the details :

Please refer to the attached document (Attached sheets 1-3)

Attached sheet 1

ETACS-ECU CODING DATA LIST

NOTE: The items to be displayed may differ depending on the version of the M.U.T.-III.

Item name	Initial value
Compressor type*	No compressor or Type 1
Temperature type	Celsius
Average speed	Not available
Fuel consumption scale	L/100km or MPG (UK)
Seat belt reminder logic	EU
Coolant temp gauge threshold	Normal
Frost warning threshold	EU
Distance to empty	Available
Average fuel consumption	Available
Instant fuel consumption	Not available
Trip autoreset IG OFF	Available
Seat belt reminder control type	Non AABT
Seat belt reminder indicator	D&P integrate
Reverse alarm	Not available
Key reminder	Not available
GCC speed alarm	Not available
Rent-a-car mode IG-OFF always	Available
Service reminder schedule table	Normal
Launch gear block alarm	Not present
TCM	Not present or Present
EPS	Present
EV	Not present
A/C	Not present or Present
OCM	Not present
ORC	Present
WCM	Not present
OSS	Not present or Present
Model year	(Displays the model year)
Vehicle line	MIRAGE
Destination	EU
EPS type	Type 1 or Type 2
Immobilizer	Type A
Handle side	LHD or RHD
ABS	Not present
A.S.C.	Present
TPMS information	220 KPA or 270 KPA <Incorrect> <Correct>
TPMS	Present for reset (for ~~ecer 64~~) EU
TPMS Off mode function	Not present

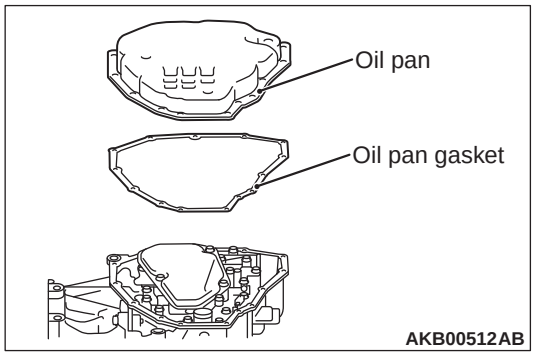

18.Remove the oil pan and oil pan gasket from the transmission assembly.

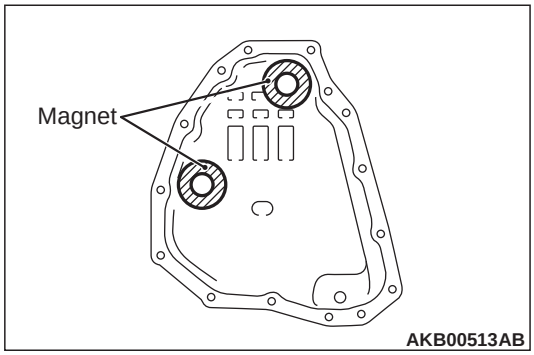

19.Remove the magnet from the oil pan.

REASSEMBLY SERVICE POINT

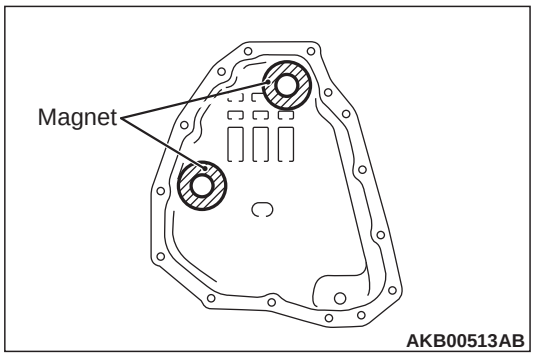

1. Install the magnet on the oil pan.

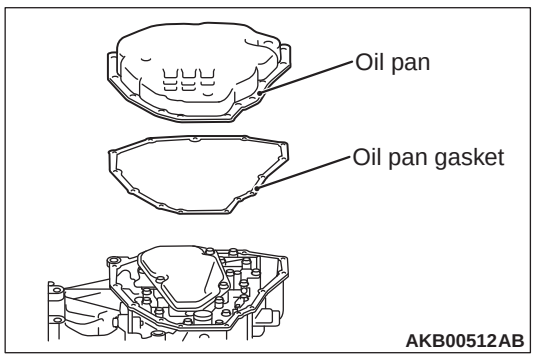

⚠ CAUTION
Do not re-use the oil pan gasket.

2. Install the oil pan and oil pan gasket on the transmission case.
3. Tighten each front oil pan mounting bolt to the temporarily torque.

⚠ CAUTION
Wipe of CVT fluid after an CVT fluid application for the prevention from CVT fluid.

4. Tighten each oil pan mounting bolt to the specified torque of 5.9 ± 0.6 N·m in the order of number shown.

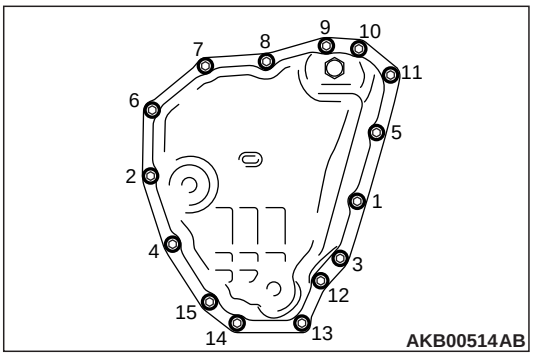

⚠ CAUTION
- **Do not re-use the O-ring.**
- **Applied oil to the the oil seal outside.**
- **Be careful not to damage an oil seal lip at the time of drive shaft application attachment enough.**
- **Wipe of CVT fluid after an CVT fluid application for the prevention from CVT fluid.**

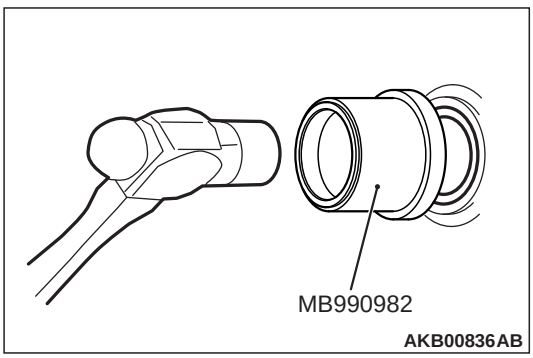

5. Using the special tool roll stopper bush r & i arbour (MB990982), install the side oil seal on the converter housing.

   Depth from the case edge: within – 1.8 ± 0.5 mm (recessed).

Be very careful not to damage the oil seal lip by the drive shaft splines when you install the drive shaft.

Wipe off the CVT fluid after you have tightened the fluid-damped fastener(s) to avoid that an oil leak is determined advertently.

⚠ CAUTION
- **Do not re-use the O-ring.**
- **Applied oil to the oil seal outside.**
- **Be careful not to damage an oil seal lip at the time of drive shaft application attachment enough.**
- **Wipe of CVT fluid after an CVT fluid application for the prevention from CVT fluid.**

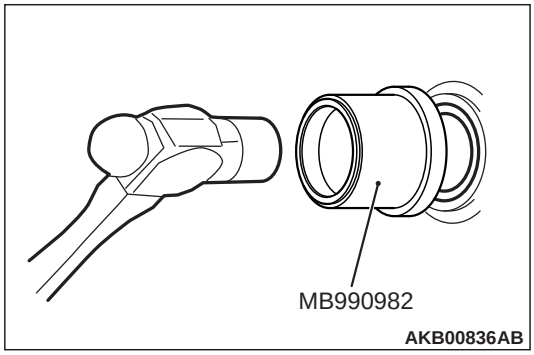

6. Using the special tools roll stopper bush r & i arbour (MB990982), install the side oil seal on the transmission case.

   Depth from the case edge: within – 1.8 ± 0.5 mm (recessed).

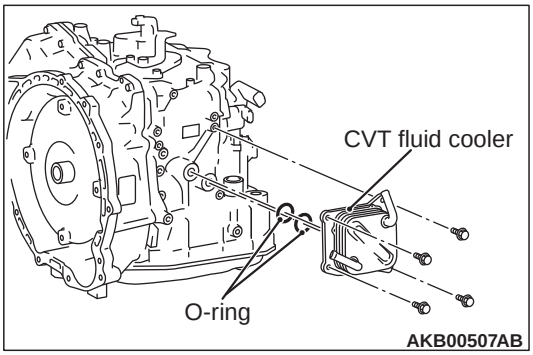

⚠ CAUTION
- **Do not re-use the O-ring.**
- **Apply CVT fluid when installing the O-ring.**
- **When installing O-ring, make sure that projection of the O-ring is put into the groove on the filter.**

7. Install the O-ring on the CVT fluid cooler.
8. Install the CVT fluid cooler on the transmission case, and tighten the mounting bolts to the specified torque of 4.3 ± 0.5 N·m.

⚠ CAUTION
Do not re-use the inhibitor switch.

9. Install the inhibitor switch on the transmission case in the following way.

Wipe off the CVT fluid after you have tightened the fluid-damped fastener(s) to avoid that an oil leak is determined advertently.

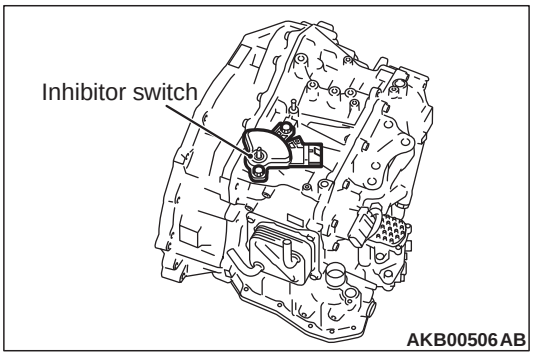

10. Install the inhibitor switch on the transmission case.
11. Tighten each inhibitor switch mounting bolt to the temporarily torque.

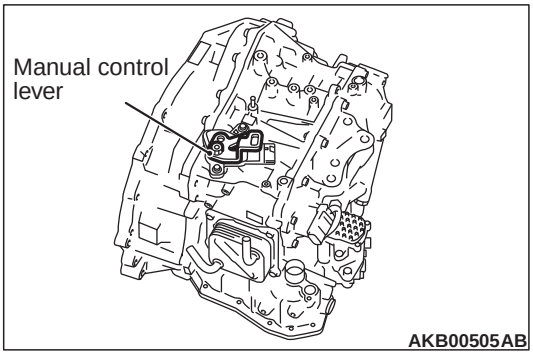

12. Install the manual control lever on the manual shaft.
13. Install the washer on the manual shaft, and tighten the mounting nuts to the specified torque of 17 ± 2 N·m.
14. Set the manual shaft at N position.

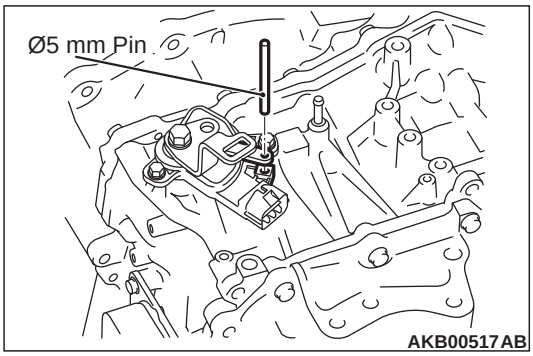

15. Adjust the inhibitor switch so that a ϕ5mm pin goes into the pin hole for N range position manual lever and inhibitor switch.

⚠ CAUTION
It checks that the pin is certainly inserted in the pin hole for N range position adjusted of manual lever and inhibitor switch.

16. Inhibitor switch tighten the mounting bolts to the specified torque of 5.9 ± 1.0 Nm.

Be very careful not to damage the oil seal lip by the drive shaft splines when you install the drive shaft.

17.A pin is removed from a pinhole for N range position justification.

⚠ CAUTION
- **Do not re-use the O-ring.**
- **Apply CVT fluid when installing the O-ring.**
- **Wipe of CVT fluid after an CVT fluid application for the prevention from CVT fluid.**

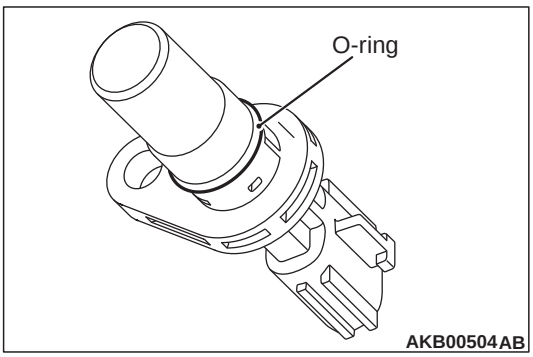

18.Install the O-ring on the output speed sensor.

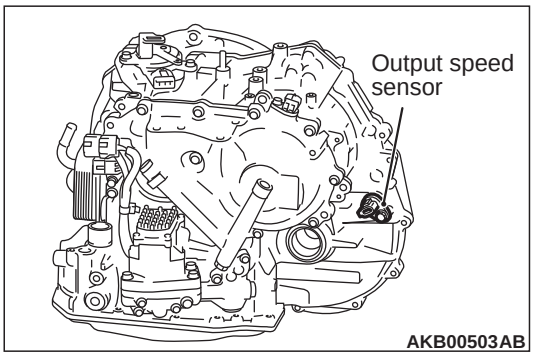

19.Install the output speed sensor on the converter housing, and tighten the mounting bolts to the specified torque of 5.9 ± 1.0 N·m.

⚠ CAUTION
- **Do not re-use the O-ring.**
- **Apply CVT fluid when installing the O-ring.**
- **Wipe of CVT fluid after an CVT fluid application for the prevention from CVT fluid.**

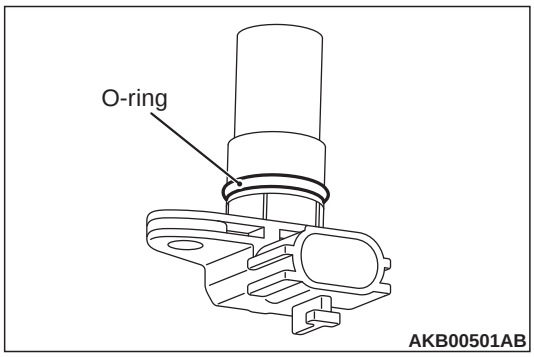

20.Install the O-ring on the primary pulley speed sensor.

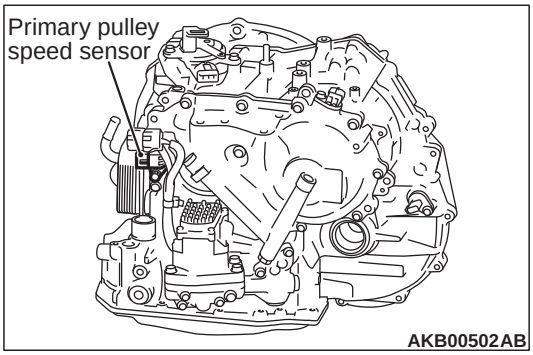

21.Install the primary pulley speed sensor on the transmission assembly, and tighten the mounting bolts to the specified torque of 5.9 ± 1.0 N·m.

⚠ CAUTION
- **Do not re-use the O-ring.**
- **Apply CVT fluid when installing the O-ring.**
- **Wipe of CVT fluid after an CVT fluid application for the prevention from CVT fluid.**

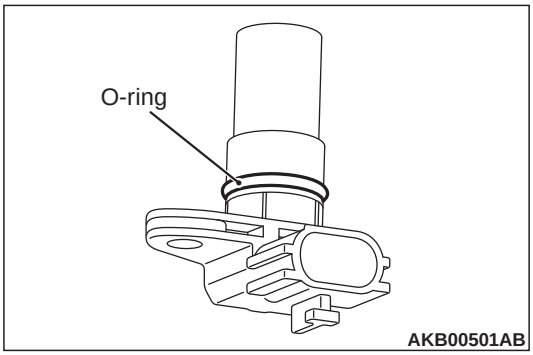

22.Install the O-ring on the secondary pulley speed sensor.

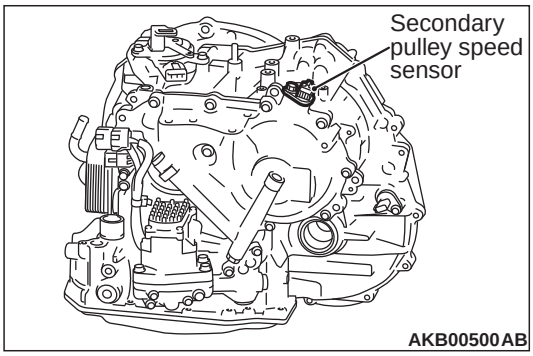

23.Install the secondary pulley speed sensor on the transmission assembly, and tighten the mounting bolts to the specified torque of 5.9 ± 1.0 N·m.

Wipe off the CVT fluid after you have tightened the fluid-damped fastener(s) to avoid that an oil leak is determined advertently.

Attached sheet 3

Item No.	Check item	Check condition	Normal condition
41	Vehicle speed sensor	Drive the vehicle	The scan tool and the speedometer readings are approximately the same
42	Ambient TEMP. (after filtering)	–	–
43	MIN.ambient TEMP. (after reset)	–	–
44	Adjusted TEMP. (after reset)	–	–
50 <Correct> Tire1	Registered ID <Incorrect> reception, Tier1	Ignition switch: ON	Yes
		Ignition switch: OFF	No
51 <Correct> Tire2	Registered ID <Incorrect> reception, Tier2	Ignition switch: ON	Yes
		Ignition switch: OFF	No
52 <Correct> Tire3	Registered ID <Incorrect> reception, Tier3	Ignition switch: ON	Yes
		Ignition switch: OFF	No
53 <Correct> Tire4	Registered ID <Incorrect> reception, Tier4	Ignition switch: ON	Yes
		Ignition switch: OFF	No
54* <Correct> Tire5	Registered ID <Incorrect> reception, Tier5	–	–
61	Air pressure, Tire1 (not adjusted)	–	–
62	Air pressure, Tire2 (not adjusted)		
63	Air pressure, Tire3 (not adjusted)		
64	Air pressure, Tire4 (not adjusted)		
65*	Air pressure, Tire5 (not adjusted)		
66	Temperature,Tire1	–	–
67	Temperature,Tire2		
68	Temperature,Tire3		
69	Temperature,Tire4		
70*	Temperature,Tire5		