SERVICE BULLETIN

MITSUBISHI MOTORS

GLOBAL AFTER SALES OFFICE, MITSUBISHI MOTORS CORPORATION

PURPOSE : CHANGE	ISSUE NO. : MSB-14EXML11-001	DATE : 2014-07-17
SUBJECT : INSTALLATION OF FLYWHEEL BOLT AND DRIVE PLATE BOLT		<DESTINATION/MODEL> (As per attached sheet 1) KA0T/KB0T/KH0W <M/Y> 06-15
GROUP : Engine(Gr:11)		

1. Description :

Please refer to the attached document for the information about the change of mention in the applicable service manual. (The installation points of the flywheel bolt for M/T and the drive plate bolt for A/T have been changed)

2. Affected service manuals :

Please refer to the attached document (Attached sheet 1)

3. About the details :

Please refer to the attached document (Attached sheets 2-7)

For EU/RUSSIA

Applicable manual	Pub. No.	Applicable title (INFO ID)	Contents
2007 L200 Workshop Manual	CCRE07E2-CD(ENG) CCRF07E2-CD(FRE) CCRG07E2-CD(GER) CCRS07E2-CD(SPA) RUSSIA:N/A	CRANKSHAFT OIL SEAL REMOVAL AND INSTALLATION（M112-00-311-80100-01）	Attached sheet 2
		CRANKSHAFT AND CYLINDER BLOCK REMOVAL AND INSTALLATION（M113-00-872-26800-01）	Attached sheet 3
2009 L200 Workshop Manual	CCRE09E1-CD(ENG) CCRF09E1-CD(FRE) CCRG09E1-CD(GER) CCRS09E1-CD(SPA) CCRI09E1-CD(ITA) RUSSIA:N/A	CRANKSHAFT OIL SEAL REMOVAL AND INSTALLATION（M112-00-312-88200-01）	Attached sheet 2
		CRANKSHAFT AND CYLINDER BLOCK REMOVAL AND INSTALLATION（M113-00-873-33500-01）	Attached sheet 3
2010 L200 Workshop Manual	CCRE10E1-CD(ENG) CCRF10E1-CD(FRE) CCRG10E1-CD(GER) CCRS10E1-CD(SPA) CCRI10E1-CD(ITA) RUSSIA:N/A	CRANKSHAFT OIL SEAL REMOVAL AND INSTALLATION（M112-00-313-68100-01）	Attached sheet 2
		CRANKSHAFT AND CYLINDER BLOCK REMOVAL AND INSTALLATION（M113-00-873-33500-01）	Attached sheet 3
2011 L200 Workshop Manual	CCRE11E1-CD(ENG) CCRF11E1-CD(FRE) CCRG11E1-CD(GER) CCRS11E1-CD(SPA) CCRI11E1-CD(ITA) RUSSIA:N/A	CRANKSHAFT OIL SEAL REMOVAL AND INSTALLATION（M112-00-313-68100-01）	Attached sheet 2
		CRANKSHAFT AND CYLINDER BLOCK REMOVAL AND INSTALLATION（M113-00-873-33500-01）	Attached sheet 3
2012 L200 Workshop Manual	CCRE12E1-CD(ENG) CCRF12E1-CD(FRE) CCRG12E1-CD(GER) CCRS12E1-CD(SPA) CCRI12E1-CD(ITA) RUSSIA:N/A	CRANKSHAFT OIL SEAL REMOVAL AND INSTALLATION<M/T>（M112-00-314-21900-01）	Attached sheet 4
		CRANKSHAFT OIL SEAL REMOVAL AND INSTALLATION<A/T>（M112-00-314-22000-01）	Attached sheet 5
		CRANKSHAFT AND CYLINDER BLOCK REMOVAL AND INSTALLATION（M113-00-874-20800-01）	Attached sheet 3
2013 L200 Workshop Manual	CKTE13E1-CD(ENG) CKTF13E1-CD(FRE) CKTG13E1-CD(GER) CKTS13E1-CD(SPA) CKTI13E1-CD(ITA) RUSSIA:N/A	CRANKSHAFT OIL SEAL REMOVAL AND INSTALLATION<M/T>（M112-00-314-21900-01）	Attached sheet 4
		CRANKSHAFT OIL SEAL REMOVAL AND INSTALLATION<A/T>（M112-00-314-22000-01）	Attached sheet 5
		CRANKSHAFT AND CYLINDER BLOCK REMOVAL AND INSTALLATION（M113-00-874-36100-01）	Attached sheet 3

2014 L200 Workshop Manual	CKTE14E1-CD(ENG) CKTF14E1-CD(FRE)	CRANKSHAFT OIL SEAL REMOVAL AND INSTALLATION<M/T>（M112-00-314-21900-01）	Attached sheet 4
	CKTG14E1-CD(GER) CKTS14E1-CD(SPA)	CRANKSHAFT OIL SEAL REMOVAL AND INSTALLATION<A/T>（M112-00-314-22000-01）	Attached sheet 5
	CKTI14E1-CD(ITA) RUSSIA:N/A	CRANKSHAFT AND CYLINDER BLOCK REMOVAL AND INSTALLATION（M113-00-874-36100-01）	Attached sheet 3
2015 L200 Workshop Manual	CKTE15E1-CD(ENG) CKTF15E1-CD(FRE)	CRANKSHAFT OIL SEAL REMOVAL AND INSTALLATION<M/T>（M112-00-314-21900-01）	Attached sheet 4
	CKTG15E1-CD(GER) CKTS15E1-CD(SPA)	CRANKSHAFT OIL SEAL REMOVAL AND INSTALLATION<A/T>（M112-00-314-22000-01）	Attached sheet 5
	CKTI15E1-CD(ITA) RUSSIA:N/A	CRANKSHAFT AND CYLINDER BLOCK REMOVAL AND INSTALLATION（M113-00-874-60600-01）	Attached sheet 3

For Thailand

2006 TRITON Workshop Manual	DRAFT	CRANKSHAFT OIL SEAL REMOVAL AND INSTALLATION（M112-00-311-16800-01）	Attached sheet 6
		CRANKSHAFT AND CYLINDER BLOCK REMOVAL AND INSTALLATION（M113-00-871-13500-01）	Attached sheet 7
		CRANKSHAFT OIL SEAL REMOVAL AND INSTALLATION（M112-00-311-27600-01）	Attached sheet 2
		CRANKSHAFT AND CYLINDER BLOCK REMOVAL AND INSTALLATION（M113-00-871-26500-01）	Attached sheet 3
2008 TRITON Workshop Manual	DRAFT	CRANKSHAFT OIL SEAL REMOVAL AND INSTALLATION（M112-00-311-16800-01）	Attached sheet 6
		CRANKSHAFT AND CYLINDER BLOCK REMOVAL AND INSTALLATION（M113-00-871-13500-01）	Attached sheet 7
		CRANKSHAFT OIL SEAL REMOVAL AND INSTALLATION（M112-00-311-27600-01）	Attached sheet 2
		CRANKSHAFT AND CYLINDER BLOCK REMOVAL AND INSTALLATION（M113-00-871-26500-01）	Attached sheet 3
2009 TRITON Workshop Manual	DRAFT	CRANKSHAFT OIL SEAL REMOVAL AND INSTALLATION（M112-00-311-16800-01）	Attached sheet 6
		CRANKSHAFT AND CYLINDER BLOCK REMOVAL AND INSTALLATION（M113-00-871-13500-01）	Attached sheet 7
		CRANKSHAFT OIL SEAL REMOVAL AND INSTALLATION（M112-00-313-11900-01）	Attached sheet 2
		CRANKSHAFT AND CYLINDER BLOCK REMOVAL AND INSTALLATION（M113-00-873-50600-01）	Attached sheet 3

2010 TRITON Workshop Manual	DRAFT	CRANKSHAFT OIL SEAL REMOVAL AND INSTALLATION (M112-00-311-16800-01)	Attached sheet 6
		CRANKSHAFT AND CYLINDER BLOCK REMOVAL AND INSTALLATION (M113-00-871-13500-01)	Attached sheet 7
		CRANKSHAFT OIL SEAL REMOVAL AND INSTALLATION (M112-00-313-11900-01)	Attached sheet 2
		CRANKSHAFT AND CYLINDER BLOCK REMOVAL AND INSTALLATION (M113-00-873-50600-01)	Attached sheet 3

For G.EXP/GCC/Mexico

Applicable manual	Pub. No.	Applicable title (INFO ID)	Contents
2007 L200/SPORTERO/ TRITON/STRADA Workshop Manual	PWTE0603R1(ENG) PWTS0604R1(SPA) MEXICO:DRAFT	CRANKSHAFT OIL SEAL REMOVAL AND INSTALLATION (M112-00-311-77100-01)	Attached sheet 6
		CRANKSHAFT AND CYLINDER BLOCK REMOVAL AND INSTALLATION (M113-00-871-13500-01)	Attached sheet 7
		CRANKSHAFT OIL SEAL REMOVAL AND INSTALLATION (M112-00-311-78200-01)	Attached sheet 2
		CRANKSHAFT AND CYLINDER BLOCK REMOVAL AND INSTALLATION (M113-00-871-44700-01)	Attached sheet 3
2008 L200/SPORTERO/ TRITON/STRADA Workshop Manual	PWTE0703R(ENG) PWTS0704R(SPA) MEXICO:DRAFT	CRANKSHAFT OIL SEAL REMOVAL AND INSTALLATION (M112-00-311-77100-01)	Attached sheet 6
		CRANKSHAFT AND CYLINDER BLOCK REMOVAL AND INSTALLATION (M113-00-871-13500-01)	Attached sheet 7
		CRANKSHAFT OIL SEAL REMOVAL AND INSTALLATION (M112-00-312-07500-01)	Attached sheet 2
		CRANKSHAFT AND CYLINDER BLOCK REMOVAL AND INSTALLATION (M113-00-871-44700-01)	Attached sheet 3
2009 L200/SPORTERO/ TRITON/STRADA/ STRADA SPORTERO Workshop Manual	PWTE0806R(ENG) PWTS0807R(SPA) MEXICO:DRAFT	CRANKSHAFT OIL SEAL REMOVAL AND INSTALLATION (M112-00-312-41700-01)	Attached sheet 6
		CRANKSHAFT AND CYLINDER BLOCK REMOVAL AND INSTALLATION (M113-00-873-00100-01)	Attached sheet 7
		CRANKSHAFT OIL SEAL REMOVAL AND INSTALLATION (M112-00-312-40600-01)	Attached sheet 2
		CRANKSHAFT AND CYLINDER BLOCK REMOVAL AND INSTALLATION (M113-00-873-01200-01)	Attached sheet 3
2010 L200/SPORTERO/ TRITON/STRADA/ STRADA SPORTERO Workshop Manual	PWTE0903R(ENG) PWTS0904R(SPA) MEXICO:DRAFT	CRANKSHAFT OIL SEAL REMOVAL AND INSTALLATION (M112-00-313-21600-01)	Attached sheet 6
		CRANKSHAFT AND CYLINDER BLOCK REMOVAL AND INSTALLATION (M113-00-873-00100-01)	Attached sheet 7

		CRANKSHAFT OIL SEAL REMOVAL AND INSTALLATION (M112-00-313-22700-01)	Attached sheet 2
		CRANKSHAFT AND CYLINDER BLOCK REMOVAL AND INSTALLATION (M113-00-873-01200-01)	Attached sheet 3

For MMAL/NZ

Applicable manual	Pub. No.	Applicable title (INFO ID)	Contents
2008 TRITON Workshop Manual	MR936232 NZ:DRAFT	CRANKSHAFT OIL SEAL REMOVAL AND INSTALLATION (M112-00-312-33200-01)	Attached sheet 2
		CRANKSHAFT AND CYLINDER BLOCK REMOVAL AND INSTALLATION (M113-00-872-26800-01)	Attached sheet 3
2009 TRITON Workshop Manual	MR936476 NZ:DRAFT	CRANKSHAFT OIL SEAL REMOVAL AND INSTALLATION<M/T> (M112-00-312-97800-01)	Attached sheet 4
		CRANKSHAFT OIL SEAL REMOVAL AND INSTALLATION<A/T> (M112-00-312-96700-01)	Attached sheet 5
		CRANKSHAFT AND CYLINDER BLOCK REMOVAL AND INSTALLATION (M113-00-873-44300-01)	Attached sheet 3
2010 TRITON Workshop Manual	MR936949 NZ:DRAFT	CRANKSHAFT OIL SEAL REMOVAL AND INSTALLATION<M/T> (M112-00-313-69200-01)	Attached sheet 4
		CRANKSHAFT OIL SEAL REMOVAL AND INSTALLATION<A/T> (M112-00-313-70000-01)	Attached sheet 5
		CRANKSHAFT AND CYLINDER BLOCK REMOVAL AND INSTALLATION (M113-00-873-75500-01)	Attached sheet 3

For G.EXP/GCC/Mexico/Thailand/South Africa

2011 L200/SPORTERO/ TRITON/STRADA/ STRADA SPORTERO Workshop Manual	PWTE1002R(ENG) PWTS1003R(SPA) Mexico/Thailand/South Africa:DRAFT	CRANKSHAFT OIL SEAL REMOVAL AND INSTALLATION (M112-00-313-21600-01)	Attached sheet 6
		CRANKSHAFT AND CYLINDER BLOCK REMOVAL AND INSTALLATION (M113-00-873-00100-01)	Attached sheet 7
		CRANKSHAFT OIL SEAL REMOVAL AND INSTALLATION (M112-00-313-81800-01)	Attached sheet 2
		CRANKSHAFT AND CYLINDER BLOCK REMOVAL AND INSTALLATION (M113-00-873-33500-01)	Attached sheet 3
2012 L200/SPORTERO/ TRITON/STRADA/ STRADA SPORTERO Workshop Manual	PWTE1105R(ENG) PWTS1106R(SPA) Mexico/Thailand/South Africa:DRAFT	CRANKSHAFT OIL SEAL REMOVAL AND INSTALLATION (M112-00-313-21600-01)	Attached sheet 6
		CRANKSHAFT AND CYLINDER BLOCK REMOVAL AND INSTALLATION (M113-00-873-00100-01)	Attached sheet 7
		CRANKSHAFT AND CYLINDER BLOCK REMOVAL AND INSTALLATION (M113-00-871-13500-01)	Attached sheet 7
		CRANKSHAFT OIL SEAL REMOVAL AND INSTALLATION	Attached sheet 2

		(M112-00-313-81800-01)	
		CRANKSHAFT AND CYLINDER BLOCK REMOVAL AND INSTALLATION(M113-00-873-33500-01)	Attached sheet 3
2013 L200/SPORTERO/ TRITON/STRADA/ STRADA SPORTERO Workshop Manual	PWTE1208R(ENG) PWTS1209R(SPA) Mexico/Thailand/South Africa:DRAFT	CRANKSHAFT OIL SEAL REMOVAL AND INSTALLATION (M112-00-313-21600-01)	Attached sheet 6
		CRANKSHAFT AND CYLINDER BLOCK REMOVAL AND INSTALLATION(M113-00-873-00100-01)	Attached sheet 7
		CRANKSHAFT AND CYLINDER BLOCK REMOVAL AND INSTALLATION(M113-00-871-13500-01)	Attached sheet 7
		CRANKSHAFT OIL SEAL REMOVAL AND INSTALLATION (M112-00-313-81800-01)	Attached sheet 2
		CRANKSHAFT AND CYLINDER BLOCK REMOVAL AND INSTALLATION(M113-00-873-33500-01)	Attached sheet 3
2014 L200/SPORTERO/ TRITON/STRADA/ STRADA SPORTERO Workshop Manual	PWTE1308R(ENG) PWTS1309R(SPA) Mexico/Thailand/South Africa:DRAFT	CRANKSHAFT OIL SEAL REMOVAL AND INSTALLATION (M112-00-313-21600-01)	Attached sheet 6
		CRANKSHAFT AND CYLINDER BLOCK REMOVAL AND INSTALLATION(M113-00-873-00100-01)	Attached sheet 7
		CRANKSHAFT AND CYLINDER BLOCK REMOVAL AND INSTALLATION(M113-00-871-13500-01)	Attached sheet 7
		CRANKSHAFT OIL SEAL REMOVAL AND INSTALLATION (M112-00-313-81800-01)	Attached sheet 2
		CRANKSHAFT AND CYLINDER BLOCK REMOVAL AND INSTALLATION(M113-00-873-33500-01)	Attached sheet 3
2015 L200/SPORTERO/ TRITON/STRADA/ STRADA SPORTERO Workshop Manual	DRAFT	CRANKSHAFT OIL SEAL REMOVAL AND INSTALLATION (M112-00-313-21600-01)	Attached sheet 6
		CRANKSHAFT AND CYLINDER BLOCK REMOVAL AND INSTALLATION(M113-00-873-00100-01)	Attached sheet 7
		CRANKSHAFT AND CYLINDER BLOCK REMOVAL AND INSTALLATION(M113-00-871-13500-01)	Attached sheet 7
		CRANKSHAFT OIL SEAL REMOVAL AND INSTALLATION (M112-00-313-81800-01)	Attached sheet 2
		CRANKSHAFT AND CYLINDER BLOCK REMOVAL AND INSTALLATION(M113-00-873-33500-01)	Attached sheet 3

For G.EXP/GCC/Thailand/South Africa/Russia/Ukraine

Applicable manual	Pub. No.	Applicable title (INFO ID)	Contents
2009 NATIVA/PAJERO SPORT/MONTERO SPORT Workshop Manual	PWJE0808R-2(ENG) PWJS0809R-2(SPA) Thailand/South Africa:DRAFT	CRANKSHAFT OIL SEAL REMOVAL AND INSTALLATION (M112-00-313-10800-01)	Attached sheet 2
		CRANKSHAFT AND CYLINDER BLOCK REMOVAL AND INSTALLATION(M113-00-873-51700-01)	Attached sheet 3
2010 NATIVA/PAJERO SPORT/MONTERO SPORT Workshop Manual	PWJE0910R(ENG) PWJS0911R(SPA) Thailand/South Africa:DRAFT	CRANKSHAFT OIL SEAL REMOVAL AND INSTALLATION (M112-00-313-65800-01)	Attached sheet 2
		CRANKSHAFT AND CYLINDER BLOCK REMOVAL AND INSTALLATION(M113-00-873-51700-01)	Attached sheet 3
2011 NATIVA/PAJERO SPORT/MONTERO SPORT Workshop Manual	PWJE1004R(ENG) PWJS1005R(SPA) Thailand/South Africa:DRAFT	CRANKSHAFT OIL SEAL REMOVAL AND INSTALLATION (M112-00-313-65800-01)	Attached sheet 2
		CRANKSHAFT AND CYLINDER BLOCK REMOVAL AND INSTALLATION(M113-00-873-33500-01)	Attached sheet 3
2012 NATIVA/PAJERO SPORT/MONTERO SPORT Workshop Manual	PWPE1109R(ENG) PWPS1110R(SPA) Thailand/South Africa:DRAFT	CRANKSHAFT OIL SEAL REMOVAL AND INSTALLATION (M112-00-313-65800-01)	Attached sheet 2
		CRANKSHAFT AND CYLINDER BLOCK REMOVAL AND INSTALLATION(M113-00-873-33500-01)	Attached sheet 3
2013 NATIVA/PAJERO SPORT/MONTERO SPORT Workshop Manual	PWJE1211R(ENG) PWJS1212R(SPA) Thailand/South Africa:DRAFT	CRANKSHAFT OIL SEAL REMOVAL AND INSTALLATION (M112-00-313-65800-01)	Attached sheet 2
		CRANKSHAFT AND CYLINDER BLOCK REMOVAL AND INSTALLATION(M113-00-873-33500-01)	Attached sheet 3
2014 NATIVA/PAJERO SPORT/MONTERO SPORT Workshop Manual	PWJE1310R(ENG) PWJS1311R(SPA) Thailand/South Africa:DRAFT	CRANKSHAFT OIL SEAL REMOVAL AND INSTALLATION (M112-00-313-65800-01)	Attached sheet 2
		CRANKSHAFT AND CYLINDER BLOCK REMOVAL AND INSTALLATION(M113-00-873-33500-01)	Attached sheet 3

Attached sheet 2

INSTALLATION SERVICE POINTS

>>D<< DRIVE PLATE BOLT <A/T>/FLYWHEEL BOLT <M/T> INSTALLATION

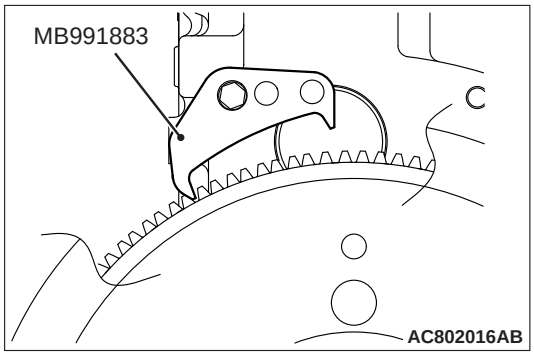

3. Use special tool flywheel stopper (MB991883) to secure the drive plate <A/T>, inertia ring assembly <A/T> or flywheel assembly <M/T>.
2. ~~Tighten the drive plate bolts <A/T> or flywheel bolts <M/T> to the specified torque.~~

>>E<< CRANKSHAFT FRONT OIL S INSTALLATION

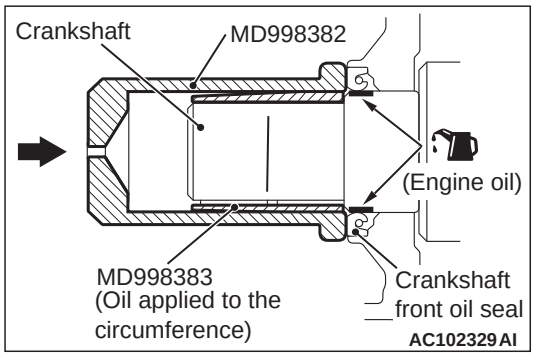

1. Apply a small amount of engine oil to the outer diameter of special tool crankshaft front oil seal guide (MD998383) and install it to the crankshaft.
2. Apply a small amount of engine oil to the entire inner diameter of the crankshaft front oil seal lip.
3. Use special tool crankshaft front oil seal installer (MD998382) to press-fit the crankshaft front oil seal.

<Old>

<Added>

1. Remove the sealant, engine oil, and other adhering materials from the flywheel installation face, the crankshaft threaded portion and flywheel bolts <M/T>.

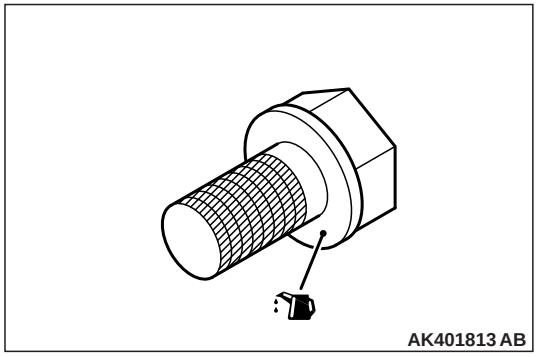

2. Apply a small amount of engine oil the installation face of the flywheel bolt and the threaded hole of the crankshaft <M/T>.

<New>

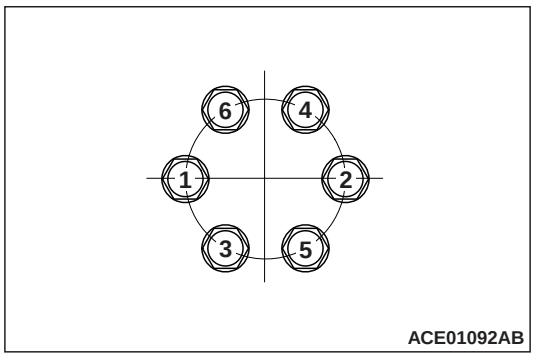

4. Tighten the drive plate bolts <A/T> or flywheel bolts <M/T> to the specified torque in the order shown in the illustration.

Attached sheet 3 (1/2)

Removal steps

<Added>

>>F<<	1.	Flywheel bolt (M/T−2WD)
	2.	Ball bearing (M/T−2WD)
	3.	Flywheel (M/T−2WD)
>>F<<	4.	Flywheel bolt (M/T−4WD)
	5.	Ball bearing (M/T−4WD)
	6.	Adapter (M/T−4WD)
	7.	Flexible flywheel (M/T−4WD)
	8.	Crankshaft adapter (M/T−4WD)
>>F<<	9.	Drive plate bolt (A/T)
	10.	Adapter plate (A/T)
	11.	Drive plate (A/T)
	12.	Inertiar ring(A/T)
	13.	Rear plate
	14.	Bell housing cover
>>E<<	15.	Oil seal case
>>D<<	16.	Oil seal
>>C<<	17.	Bearing cap bolt
>>C<<	18.	Bearing cap
>>C<<	19.	Bearing cap No.3
>>C<<	20.	Bearing cap No.4
>>B<<	21.	Crankshaft bearing, lower
	22.	Crankshaft
>>B<<	23.	Crankshaft bearing, upper
>>B<<	24.	Crankshaft thrust bearing
>>A<<	25.	Check valve
>>A<<	26.	Oil jet
	27.	Engine support bracket, right
	28.	Engine support bracket, left
	29.	Cylinder block

INSTALLATION SERVICE POINTS

>>E<< OIL SEAL CASE INSTALLATION

1. Remove completely old FIPG remaining on the rear oil seal case and cylinder block.

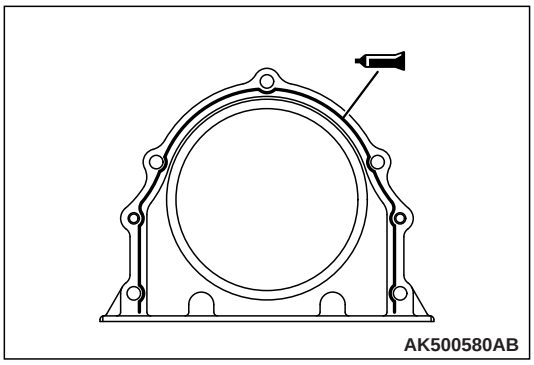

2. Apply a bead of FIPG to the surface of the rear oil seal case as shown in the drawing.

   Specified sealant:
   Three bond 1217G or equivalent

   NOTE: Be sure to install the case quickly while the sealant is wet (within 15 minutes).
3. Install the oil seal into the cylinder block after applying an appropriate amount of engine oil to the entire circumference of its lip portion.
4. Install the rear oil seal case by tightening its bolts to 11 ± 1 N·m.

NOTE: After installation, keep the sealed area away from the oil for approximately one hour.

Attached sheet 3 (2/2) is to be inserted.

>>F<< DRIVE PLATE BOLT <A/T>/FLYWHEEL BOLT <M/T> INSTALLATION

1. Remove the sealant, engine oil, and other adhering materials from the flywheel installation face, the crankshaft threaded portion and flywheel bolts <M/T>.

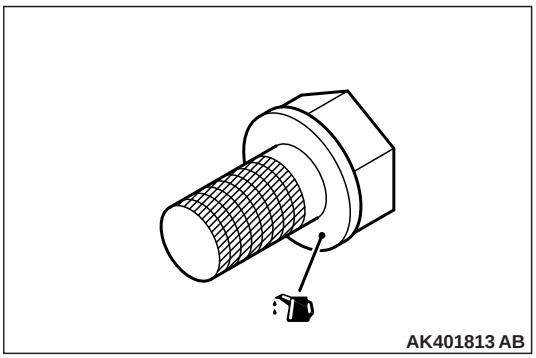

2. Apply a small amount of engine oil the installation face of the flywheel bolt and the threaded hole of the crankshaft <M/T>.

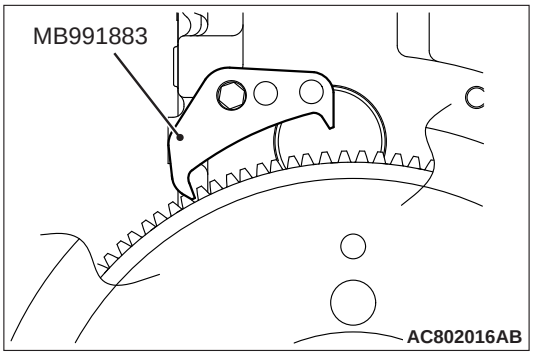

3. Use special tool flywheel stopper (MB991883) to secure the drive plate <A/T>, inertia ring assembly <A/T> or flywheel assembly <M/T>.

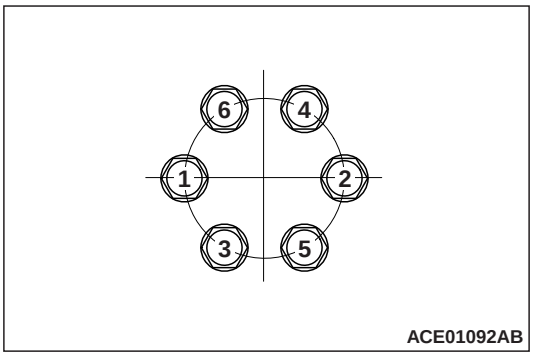

4. Tighten the drive plate bolts <A/T> or flywheel bolts <M/T> to the specified torque in the order shown in the illustration.

Attached sheet 4

>>D<< FLYWHEEL BOLT INSTALLATION

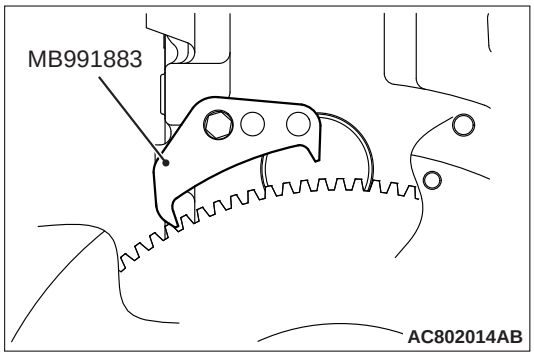

3. Use special tool flywheel stopper (MB991883) to secure the flywheel assembly.
2. Tighten the flywheel bolts to the specified torque.

>>E<< CRANKSHAFT FRONT OIL SEAL INSTALLATION

<Old>

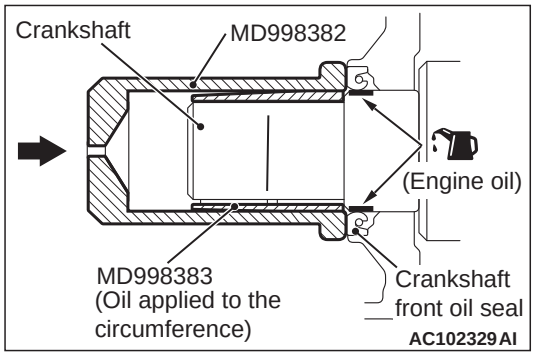

1. Apply a small amount of engine oil to the outer diameter of special tool crankshaft front oil seal guide (MD998383) and install it to the crankshaft.
2. Apply a small amount of engine oil to the entire inner diameter of the oil seal lip.
3. Use special tool crankshaft front oil seal installer (MD998382) to press-fit the crankshaft front oil seal.

<Added>

1. Remove the sealant, engine oil, and other adhering materials from the flywheel installation face, the crankshaft threaded portion and flywheel bolts.

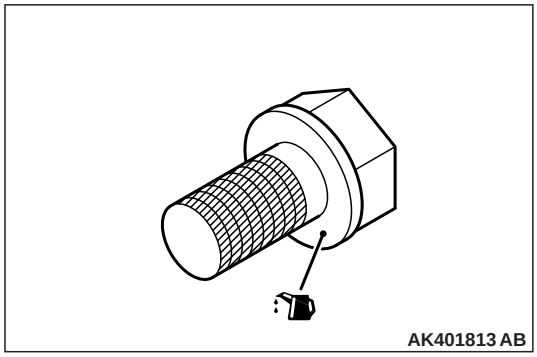

2. Apply a small amount of engine oil the installation face of the flywheel bolt and the threaded hole of the crankshaft.

<New>

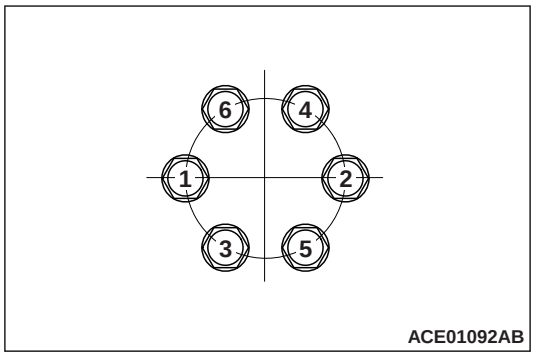

4. Tighten the flywheel bolts to the specified torque in the order shown in the illustration.

Attached sheet 5

>>C<< DRIVE PLATE BOLT INSTALLATION

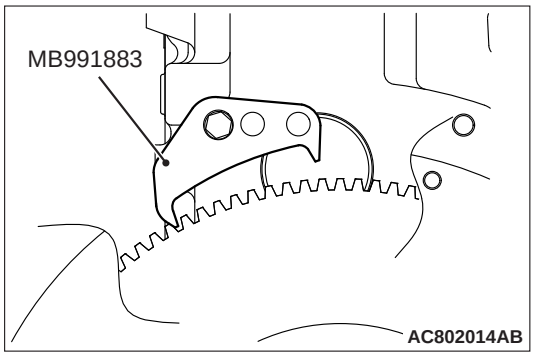

1. Use special tool flywheel stopper (MB991883) to secure the inertia ring assembly.
2. Tighten the drive plate bolts to the specified torque.

>>D<< CRANKSHAFT FRONT OIL SEAL INSTALLATION

<Old>

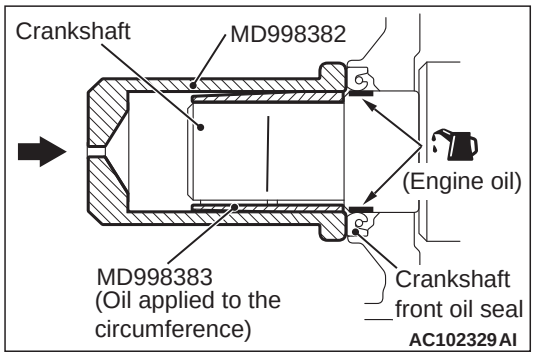

1. Apply a small amount of engine oil to the outer diameter of special tool crankshaft front oil seal guide (MD998383) and install it to the crankshaft.
2. Apply a small amount of engine oil to the entire inner diameter of the oil seal lip.
3. Use special tool crankshaft front oil seal installer (MD998382) to press-fit the crankshaft front oil seal.

>>E<< CRANKSHAFT B SPROCKET INSTALLATION

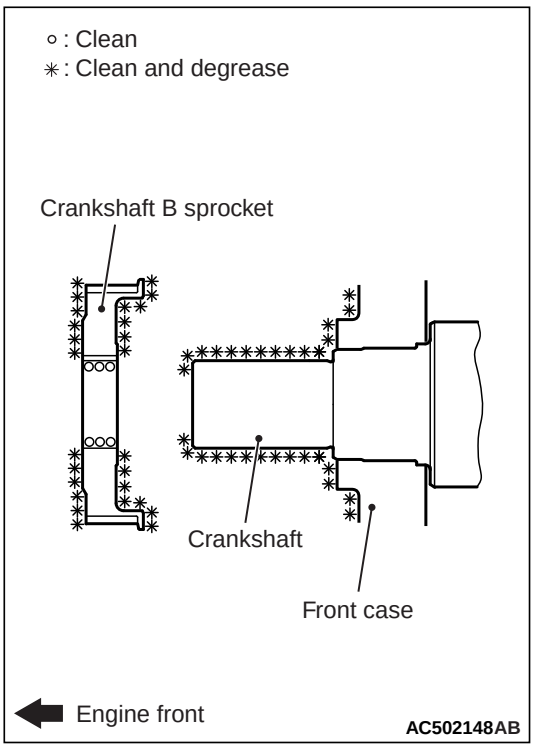

1. Clean or degrease the oil pump case, the crankshaft and the crankshaft B sprocket as shown.

   NOTE: Also clean the degreased surfaces.
2. Install the crankshaft B sprocket in the direction shown in the illustration.

<New>

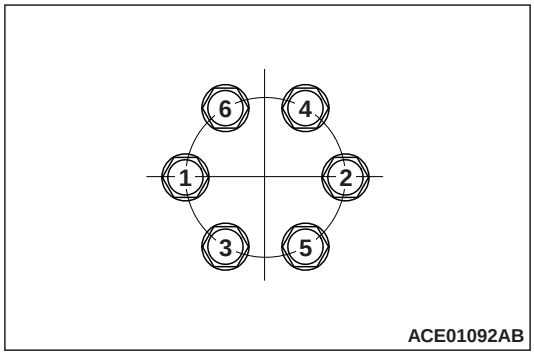

2. Tighten the drive plate bolts to the specified torque in the order shown in the illustration.

Attached sheet 6

>>C<< FLYWHEEL ASSEMBLY INSTALLATION

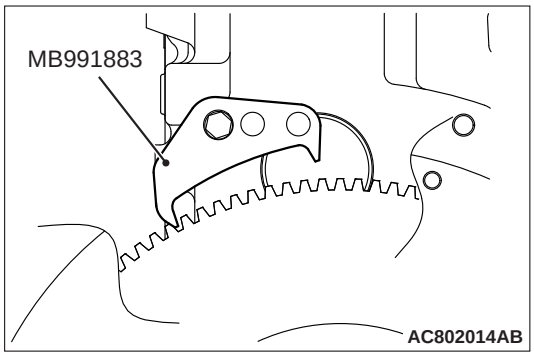

3. Use special tool flywheel stopper (MB991883) to secure the flywheel assembly.
2. ~~Tighten the flywheel bolts to the specified torque.~~

<Old>

>>D<< CRANKSHAFT OIL SEAL FRO INSTALLATION

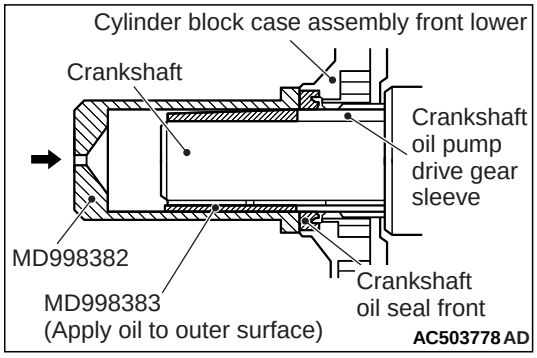

1. Apply a small amount of engine oil to the outer diameter of special tool crankshaft front oil seal guide (MD998383) and install it to the crankshaft.
2. Apply a small amount of engine oil to the entire inner diameter of the crankshaft oil seal front lip.
3. Use special tool crankshaft front oil seal installer (MD998382) to press-fit the crankshaft oil seal front.

<Added>

1. Remove the sealant, engine oil, and other adhering materials from the flywheel installation face, the crankshaft threaded portion and flywheel bolts.

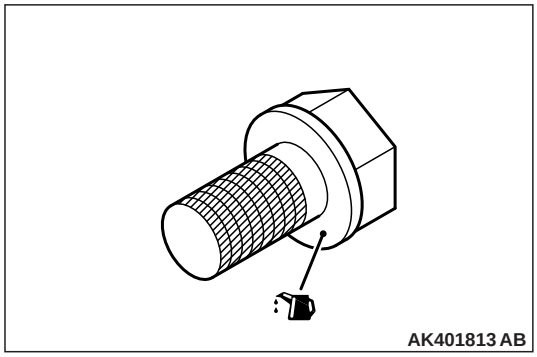

2. Apply a small amount of engine oil the installation face of the flywheel bolt and the threaded hole of the crankshaft.

<New>

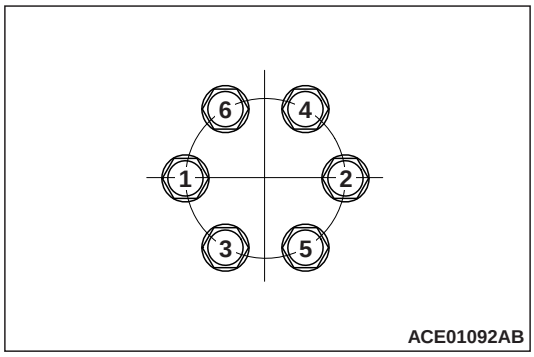

4. Tighten the flywheel bolts to the specified torque in the order shown in the illustration.

Attached sheet 7

Removal steps

<Added> >>E<< 1. Flywheel
2. Ball bearing
3. Rear plate
4. Bell housing cover
5. Oil seal case
6. Oil seal case gasket
>>D<< 7. Oil separator
>>C<< 8. Oil seal
>>B<< 9. Bearing cap
>>A<< 10. Crankshaft bearing, lower
11. Crankshaft
>>A<< 12. Crankshaft bearing, upper
>>A<< 13. Crankshaft thrust bearing
14. O-ring
15. Cover
16. Cover gasket
17. Engine support bracket, right
18. Engine support bracket, left
19. Cylinder sleeve
20. Cylinder block

INSTALLATION SERVICE POINTS

>>D<< OIL SEPARATOR INSTALLATION

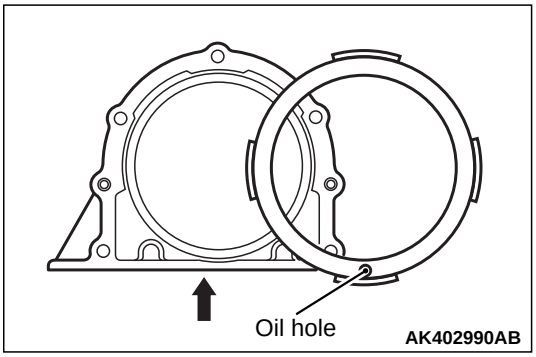

Push the oil separator into the oil seal case, with its oil hole at the case bottom (indicated by an arrow in illustration).

<Added>

>>E<< FLYWHEEL INSTALLATION

1. Remove the sealant, engine oil, and other adhering materials from the flywheel installation face, the crankshaft threaded portion and flywheel bolts.

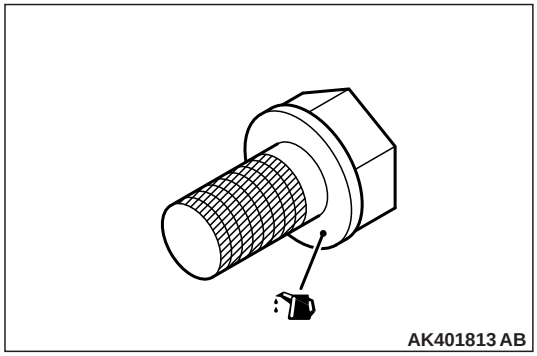

2. Apply a small amount of engine oil the installation face of the flywheel bolt and the threaded hole of the crankshaft.

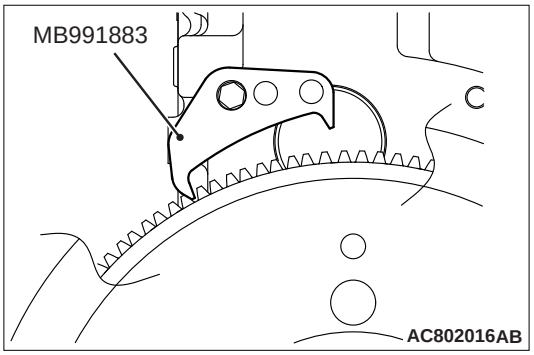

3. Use special tool flywheel stopper (MB991883) to secure the flywheel assembly.

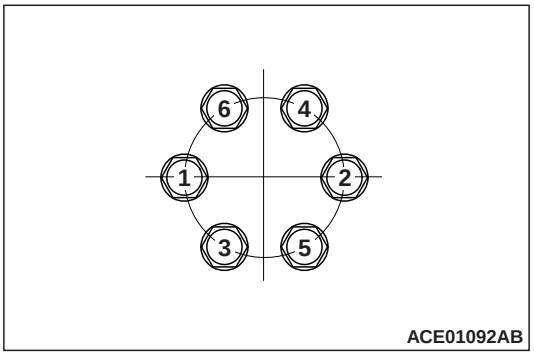

4. Tighten the flywheel bolts to the specified torque in the order shown in the illustration.