MITSUBISHI MOTORS

SERVICE BULLETIN

GLOBAL AFTER SALES OFFICE, MITSUBISHI MOTORS CORPORATION

PURPOSE : CHANGE	ISSUE NO. : MSB-14EXML11-002	DATE : 2014-10-15
SUBJECT : Unification of the service parts of timing chain case		<DESTINATION/MODEL> (As per attached sheet 1) <M/Y> 13-14
GROUP : Gr:11(Engine)		MIRAGE/SPACE STAR(A03A)

1. Description :

Please refer to the attached document for the information about the change of mention in the applicable service manual. The service parts of timing chain case is unified to that of 15MY vehicles. Also, the timing chain case cover will be supplied continuously from now on.

2. Affected service manuals :

Please refer to the attached document (Attached sheet 1)

3. About the details :

Please refer to the attached document (Attached sheet 2)
As for the relevant construction method, please see the workshop and service manuals for 15MY.

For overseas market

1) Thailand/ ASEAN/ Philippines/G.EXP/GCC

Refer to 2015 MIRAGE/SPACE STAR Workshop Manual

[Pub No. PWFE1405R (Eng)/ PWFS1406R (Spa)]

2) EU

Refer to 2015 MIRAGE/SPACE STAR Workshop Manual

[Pub No. CA0E15E1-CD(Eng)/CA0F15E1-CD(Fre)/CA0G15E1-CD(Ger)/CA0S15E1-CD(Spa)/CA0I15E1-CD(Ita)]

3) MMAL/NZ

Refer to 2015 MIRAGE Workshop Manual

[Pub No. AU900425]

4) MMNA

Refer to 2015 MIRAGE Service Manual

[Pub No. MSCD-016B-2015]

4. Effective time : From the end of Oct, 2014

Thailand

Applicable manual	Pub No.	Applicable title (INFO ID)
2013 MIRAGE Workshop Manual	DRAFT	CAMSHAFT REMOVAL AND INSTALLATION (M112-00-781-58900-01)
		TIMING CHAIN CASE ASSEMBLY REMOVAL AND INSTALLATION (M112-01-010-07100-01)
		OIL PAN AND TIMING CHAIN CASE REMOVAL AND INSTALLATION (M113-02-631-50800-01)

ASEAN

Applicable manual	Pub No.	Applicable title (INFO ID)
2013 MIRAGE Workshop Manual	PWFE1201R	CAMSHAFT REMOVAL AND INSTALLATION (M112-00-781-58900-01)
		TIMING CHAIN CASE ASSEMBLY REMOVAL AND INSTALLATION (M112-01-010-07100-01)
		OIL PAN AND TIMING CHAIN CASE REMOVAL AND INSTALLATION (M113-02-631-50800-01)

Philippines

Applicable manual	Pub No.	Applicable title (INFO ID)
2013 MIRAGE Workshop Manual	PWFE1201RP	CAMSHAFT REMOVAL AND INSTALLATION (M112-00-781-58900-01)
		TIMING CHAIN CASE ASSEMBLY REMOVAL AND INSTALLATION (M112-01-010-07100-01)
		OIL PAN AND TIMING CHAIN CASE REMOVAL AND INSTALLATION (M113-02-631-50800-01)

G.EXP/GCC

Applicable manual	Pub No.	Applicable title (INFO ID)
2014 MIRAGE/ SPACE STAR Workshop Manual	PWFE1301R (Eng) PWFS1302R (Spa)	CAMSHAFT REMOVAL AND INSTALLATION (M112-00-781-58900-01)
		TIMING CHAIN CASE ASSEMBLY REMOVAL AND INSTALLATION (M112-01-010-07100-01)
		OIL PAN AND TIMING CHAIN CASE REMOVAL AND INSTALLATION (M113-02-631-50800-01)

EU

Applicable manual	Pub No.	Applicable title (INFO ID)
2013 MIRAGE/ SPACE STAR Workshop Manual	CA0E13E1-CD (Eng) CA0F13E1-CD (Fre) CA0G13E1-CD (Ger) CA0S13E1-CD (Spa) CA0I13E1-CD (Ita)	CAMSHAFT REMOVAL AND INSTALLATION (M112-00-781-58900-01)
		TIMING CHAIN CASE ASSEMBLY REMOVAL AND INSTALLATION (M112-01-010-07100-01)
		OIL PAN AND TIMING CHAIN CASE REMOVAL AND INSTALLATION (M113-02-631-56400-01)

MMAL/NZ

Applicable manual	Pub No.	Applicable title (INFO ID)
2014 MIRAGE Workshop Manual	AU900305 NZ:DRAFT	CAMSHAFT REMOVAL AND INSTALLATION (M112-00-781-58900-01)
		TIMING CHAIN CASE ASSEMBLY REMOVAL AND INSTALLATION (M112-01-010-07100-01)
		OIL PAN AND TIMING CHAIN CASE REMOVAL AND INSTALLATION (M113-02-631-56400-01)

MMNA

Applicable manual	Pub No.	Applicable title (INFO ID)
2014 MIRAGE Service Manual	MSCD-016B-2014	CAMSHAFT REMOVAL AND INSTALLATION (M112-00-781-58900-01)
		TIMING CHAIN CASE ASSEMBLY REMOVAL AND INSTALLATION (M112-01-020-11900-01)
		OIL PAN AND TIMING CHAIN CASE REMOVAL AND INSTALLATION (M113-02-631-56400-01)

For overseas market

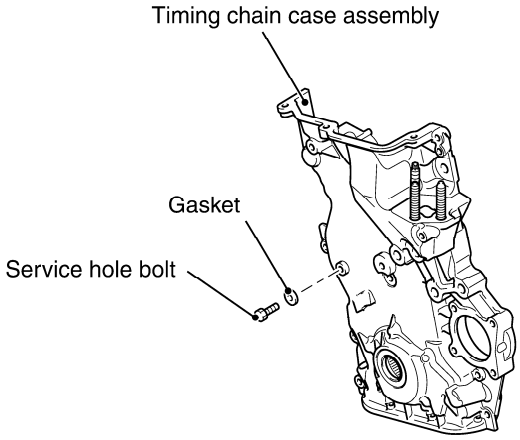

<New>

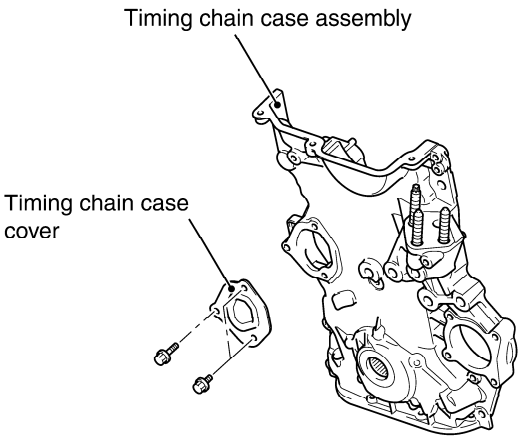

<Old>