SERVICE BULLETIN

MITSUBISHI MOTORS

GLOBAL AFTER SALES OFFICE, MITSUBISHI MOTORS CORPORATION

PURPOSE : CHANGE	ISSUE NO. : MSB-14EXML15_17-001	DATE : 2014-10-02
SUBJECT : Omission of N mark for non-reusable parts and the tightening torque in the exhaust related parts.		<DESTINATION/MODEL> <M/Y> (For all destinations) As per attached sheet 1
GROUP : Gr:15(Intake exhaust)/Gr:17(Emission control)		

1. Description :

Please refer to the attached document for the information about the change of mention in the applicable service manual.

2. Affected service manuals :

Please refer to the attached document (Attached sheet 1)

3. About the details :

Please refer to the attached document (Attached sheet 8-19)

- Vehicles except for MMNA: Refer to attached sheet 1 and attached sheet 8 to 15
- Vehicles for MMNA: Refer to attached sheet 1 and attached sheet 16 to 19

Attached sheet 1

For oversea market

<Vehicles except for MMNA>

Applicable vehicle		Model year	Contents
LANCER		2008MY to 2015MY	Attached sheet 8
LANCER SPORTBACK		2009MY to 2015MY	
LANCER EVOLUTION X		2008MY to 2015MY	Attached sheet 9
DELICA D:5		2007MY to 2015MY	Attached sheet 10
ASX/OUTLANDER SPORT	4A9 and 4N1	2011MY to 2015MY	Attached sheet 11
	4B1 (Except MMNA production)	2011MY to 2013MY	
	4B1 (MMNA production)	2014MY and 2015MY	
PEUGEOT 4008		2012MY	
CITROEN C4 AIRCROSS		2012MY	
OUTLANDER	4N1	2013MY to 2015MY	Attached sheet 12
	6B3		
L200/L200 SPORTERO/TRITON/STRADA/STRADA SPORTERO		2007MY to 2015MY	Attached sheet 13
PAJERO SPORT/NATIVA/MONTERO SPORT/CHALLENGER		2009MY to 2014MY	Attached sheet 14
PAJERO/NATIVA/MONTERO		2007MY to 2015MY	Attached sheet 15

<Vehicles for MMNA>

Applicable vehicle		Model year	Contents
LANCER		2008MY to 2015MY	Attached sheet 16
LANCER SPORTBACK		2009MY to 2015MY	
LANCER EVOLUTION X		2008MY to 2015MY	Attached sheet 17
ASX/RVR		2011MY to 2015MY	Attached sheet 18
OUTLANDER	6B3	2014MY and 2015MY	Attached sheet 19

<4A9 (Euro5, Euro4-A/T)>

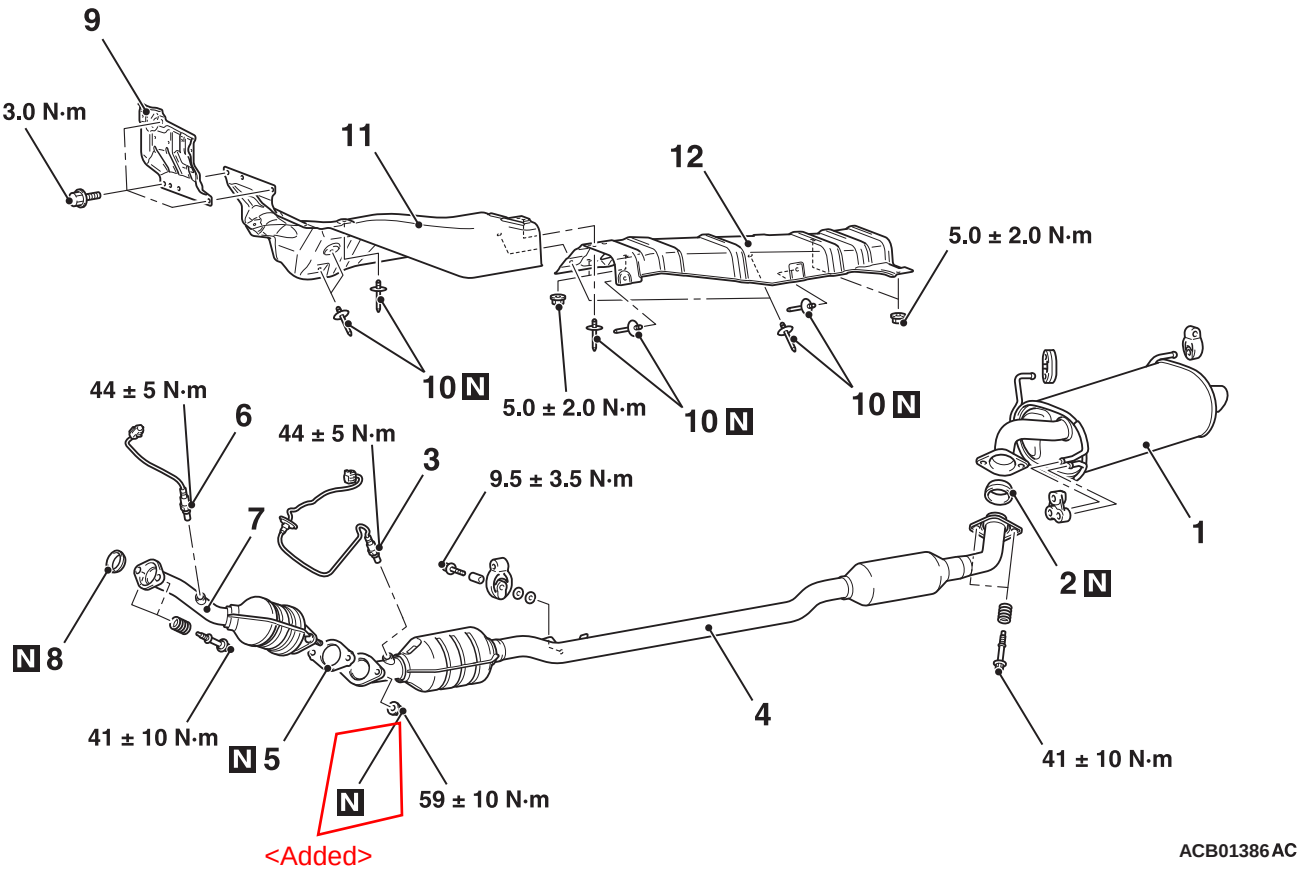

<4A9 (Euro4-M/T)>

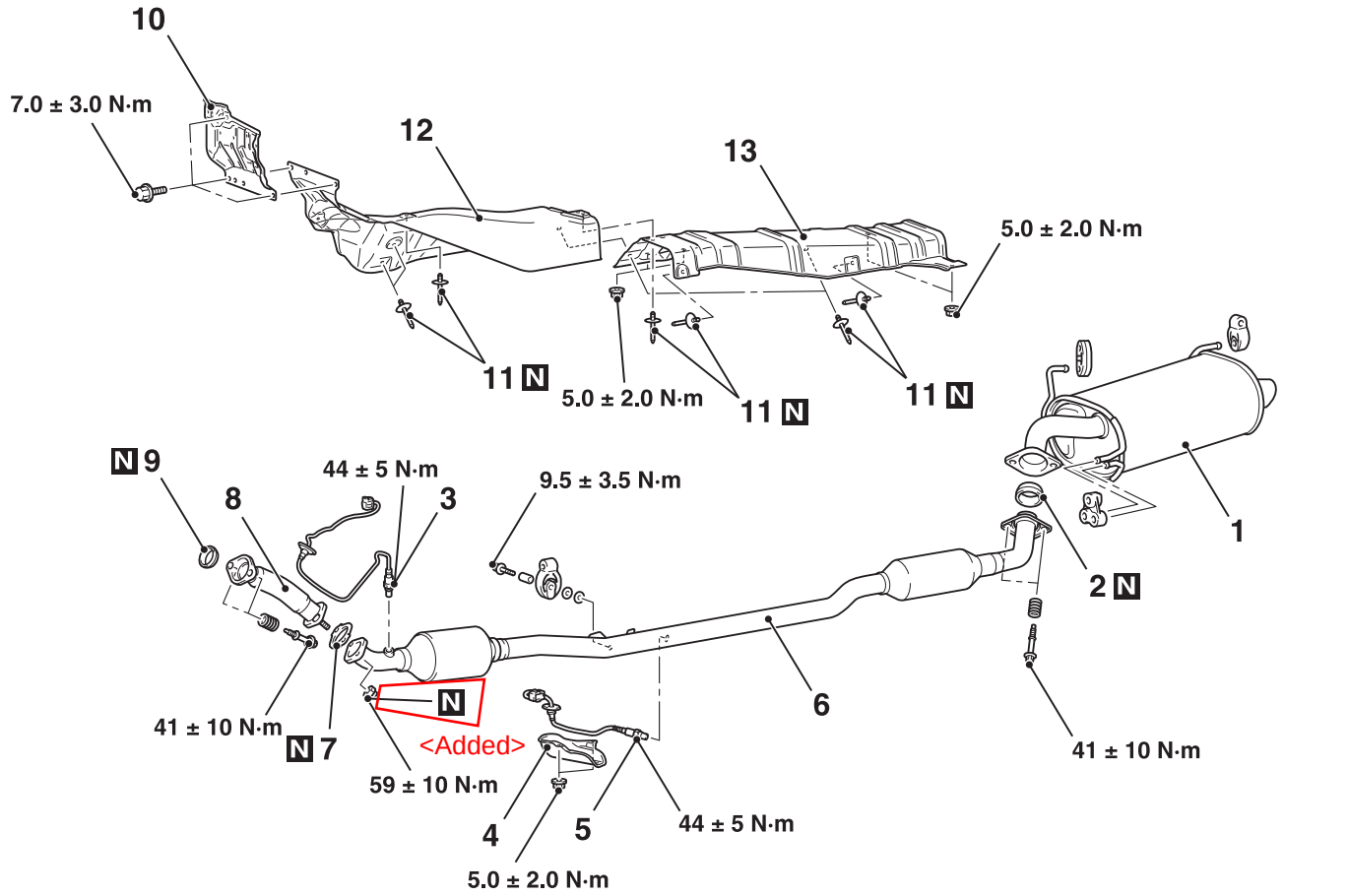

ACB01387 AC

<4B10, 4B11-NON-TURBO, 4B12>

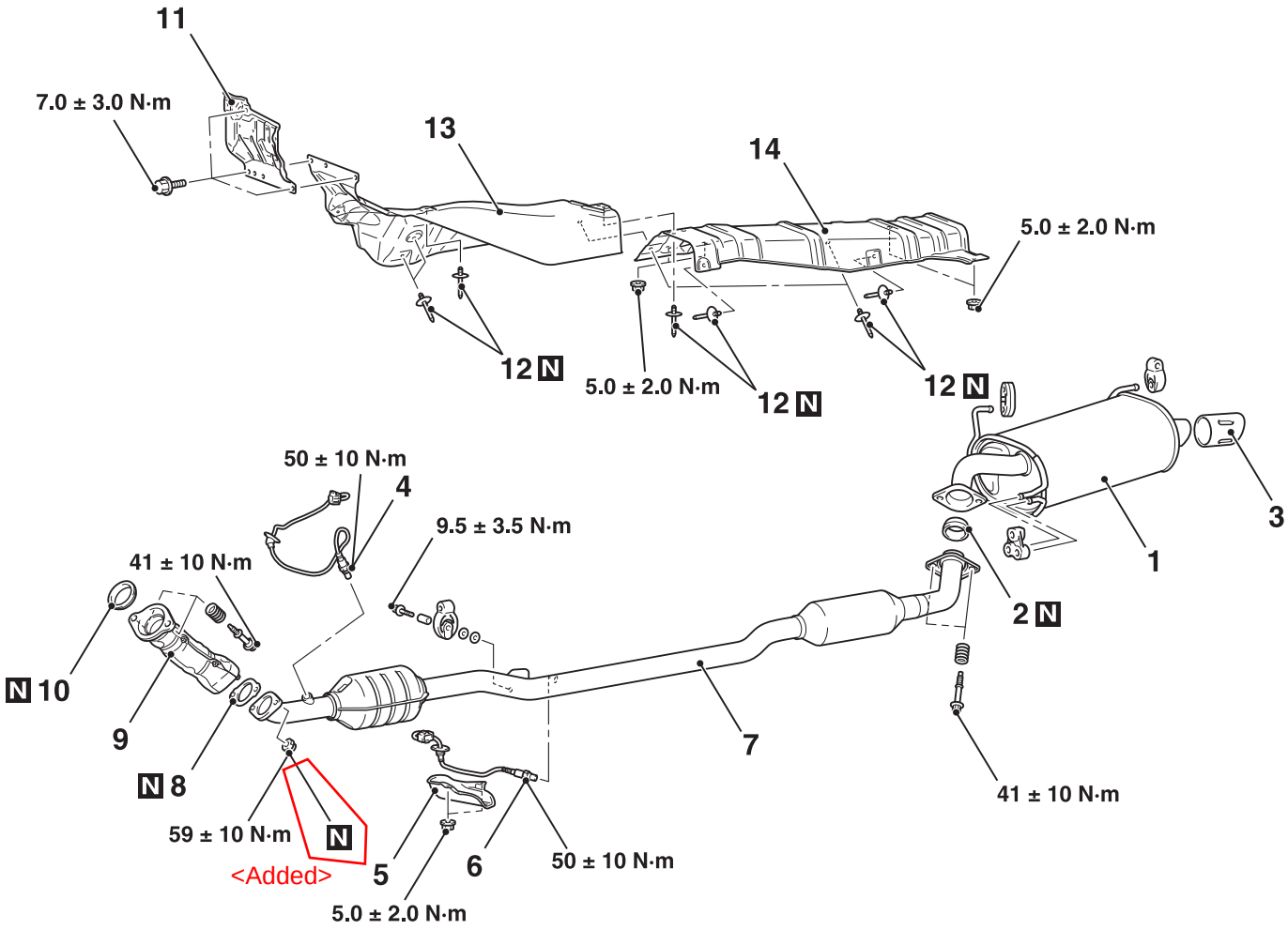

<4B11-TURBO>

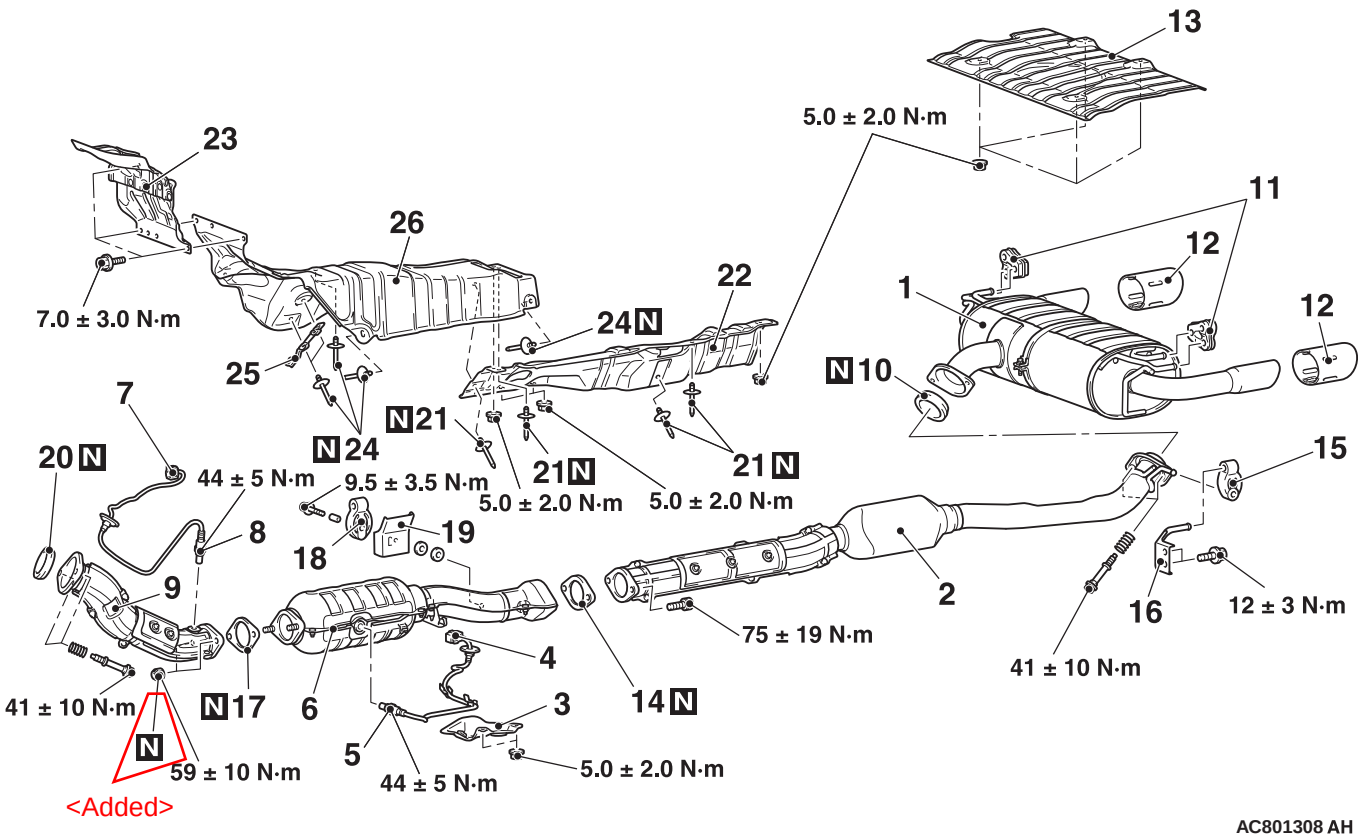
13
5.0 ± 2.0 N·m
23
11
26
12
22
1
12
7.0 ± 3.0 N·m
24 N
25
N 10
7
N 21
N 24
20 N
44 ± 5 N·m
9.5 ± 3.5 N·m
21 N
21 N
15
5.0 ± 2.0 N·m
5.0 ± 2.0 N·m
8
19
18
9
2
16
12 ± 3 N·m
75 ± 19 N·m
4
41 ± 10 N·m
41 ± 10 N·m
N 17
6
3
14 N
N
5
59 ± 10 N·m
44 ± 5 N·m
5.0 ± 2.0 N·m
<Added>
AC801308 AH

<4J1>

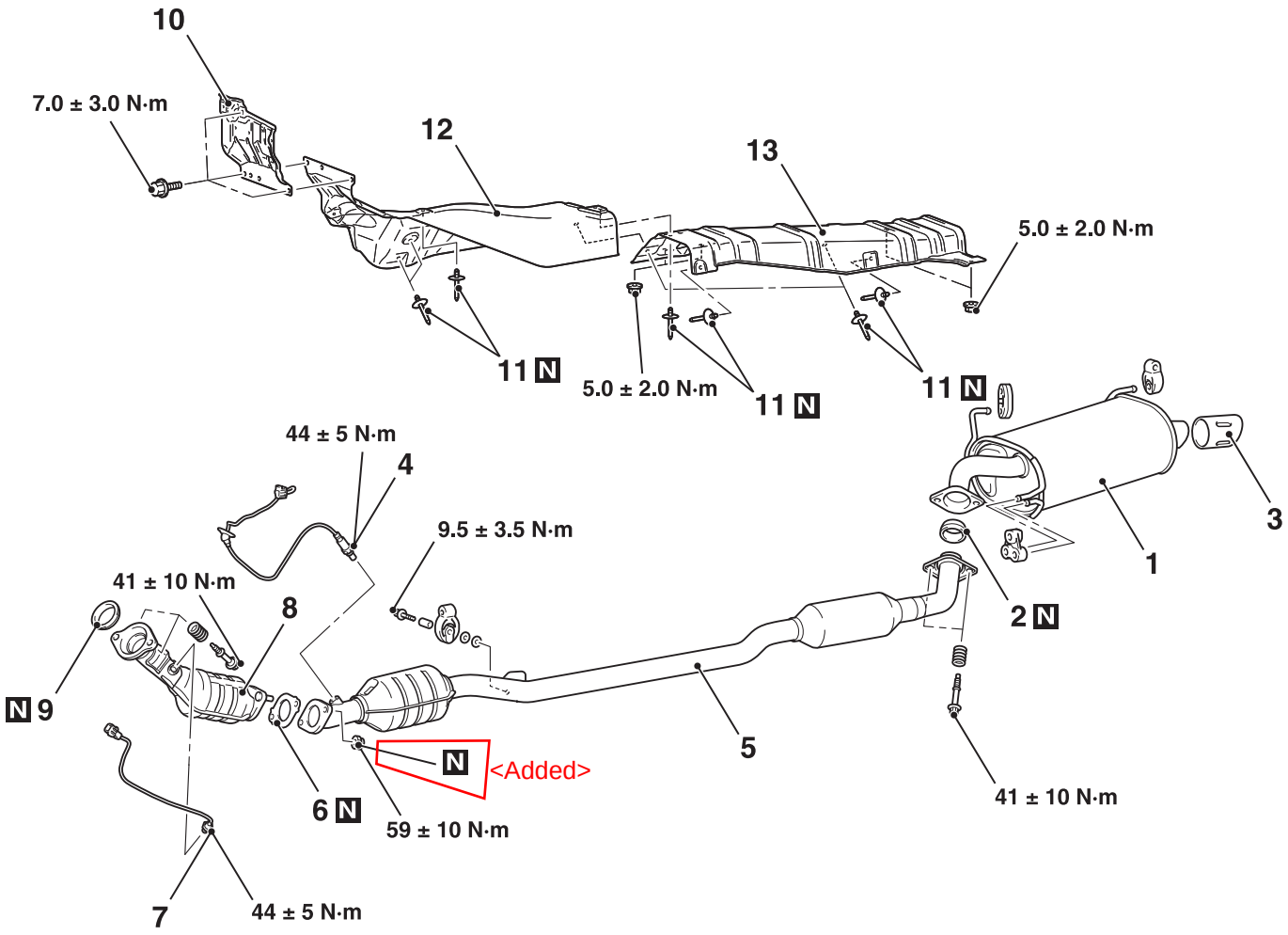

ACB01390AC

<4N1>

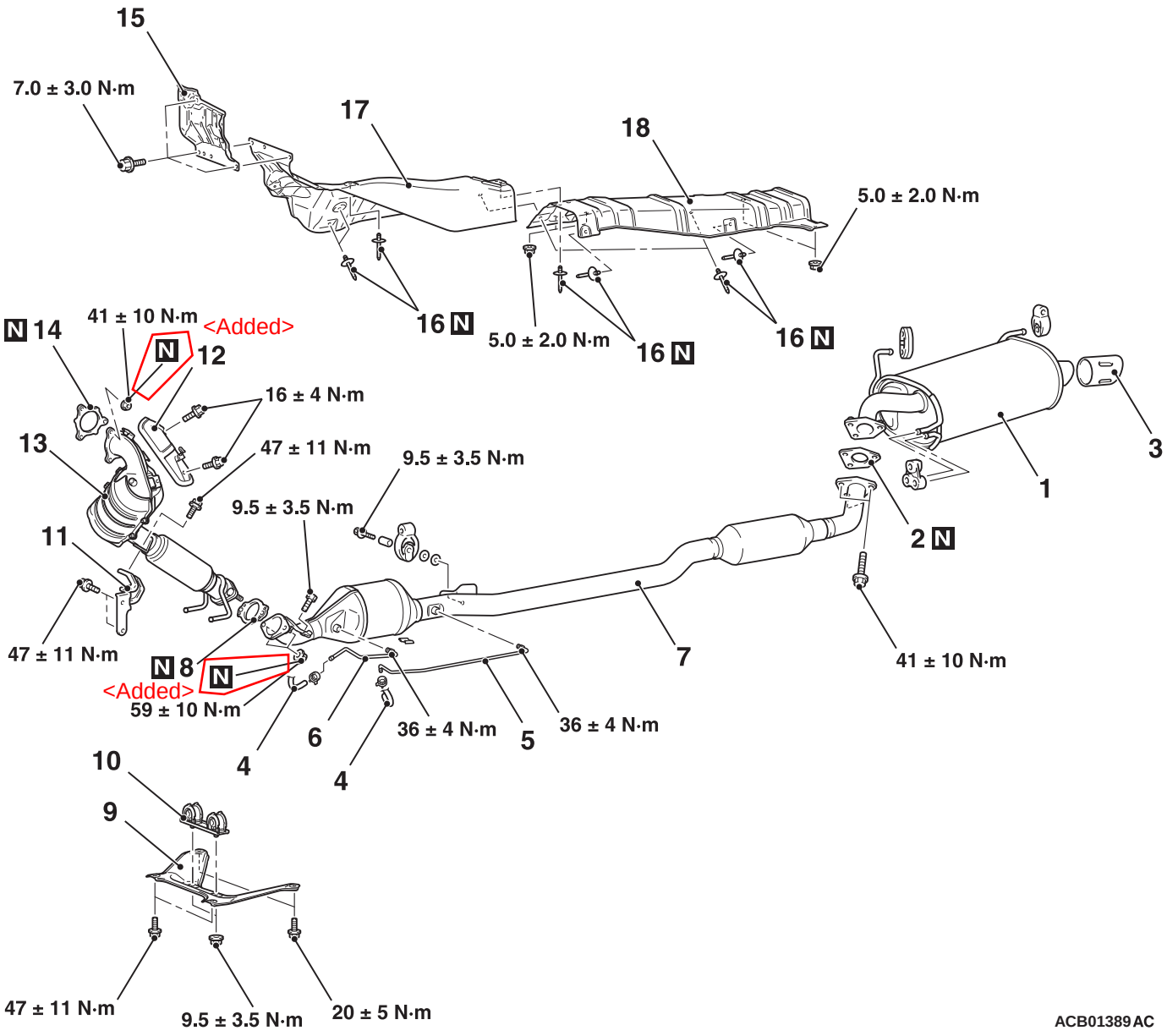
15
7.0 ± 3.0 N·m
17
18
5.0 ± 2.0 N·m
16 N
5.0 ± 2.0 N·m
16 N
16 N
N 14
41 ± 10 N·m
<Added>
N 12
16 ± 4 N·m
13
47 ± 11 N·m
9.5 ± 3.5 N·m
9.5 ± 3.5 N·m
11
47 ± 11 N·m
N 8
N
<Added>
59 ± 10 N·m
4
6
4
36 ± 4 N·m
5
36 ± 4 N·m
7
1
3
2 N
41 ± 10 N·m
10
9
47 ± 11 N·m
9.5 ± 3.5 N·m
20 ± 5 N·m
ACB01389AC

Attached sheet 9

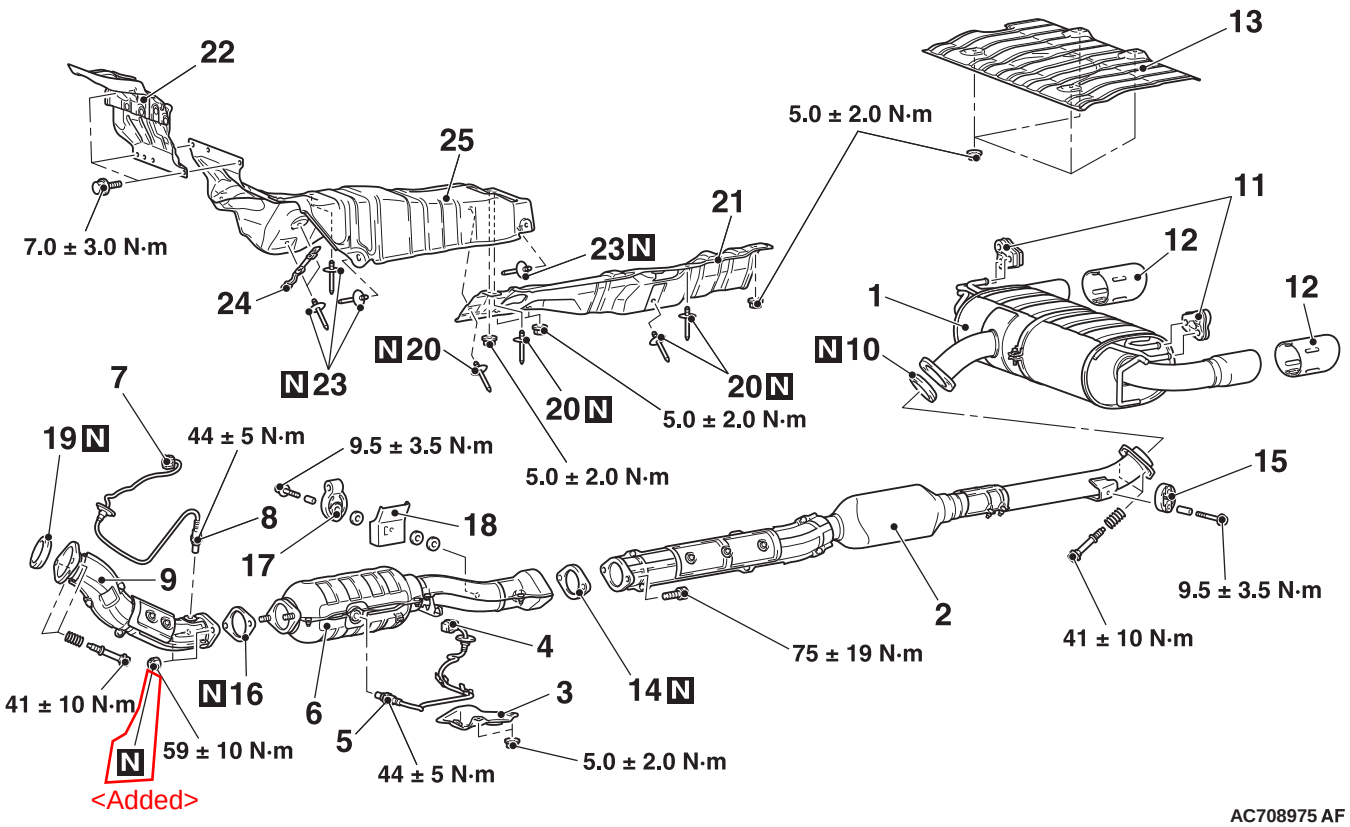

DELICA D:5

Attached sheet 10

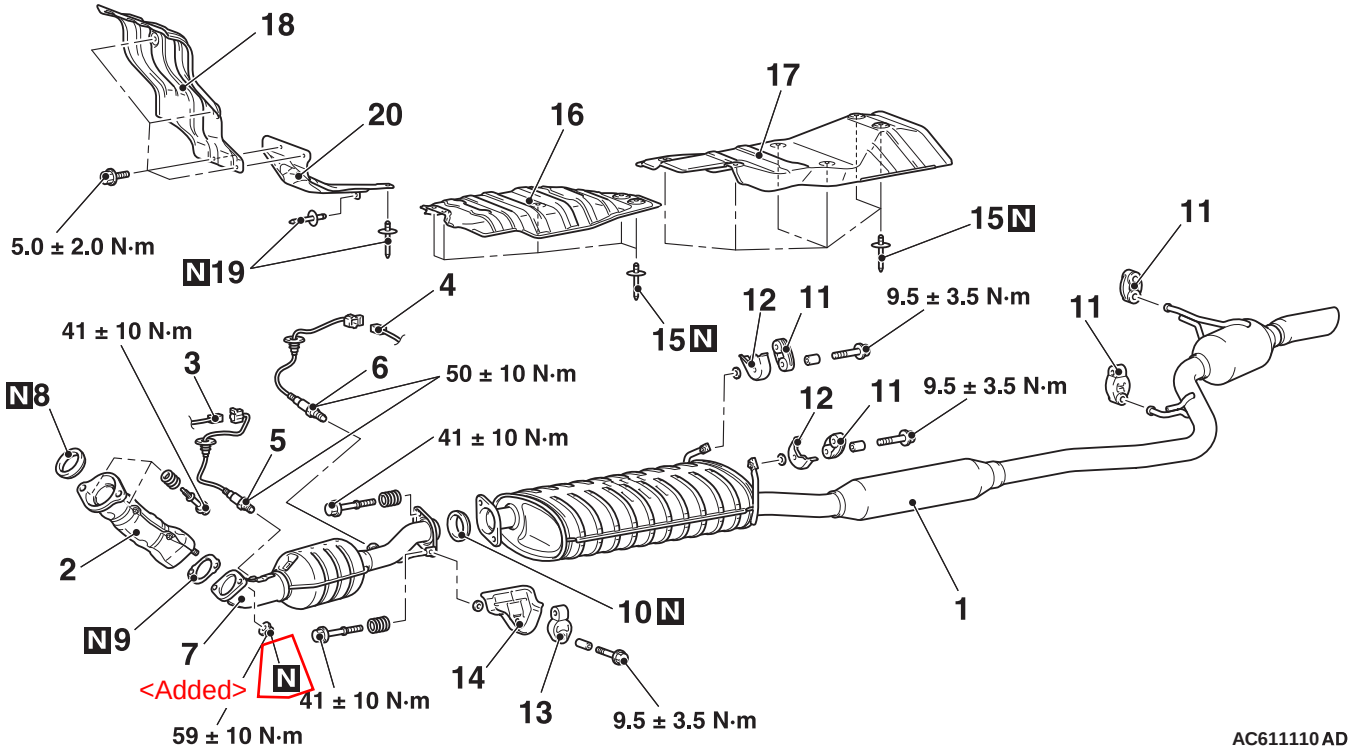

<4B1 (2WD)>

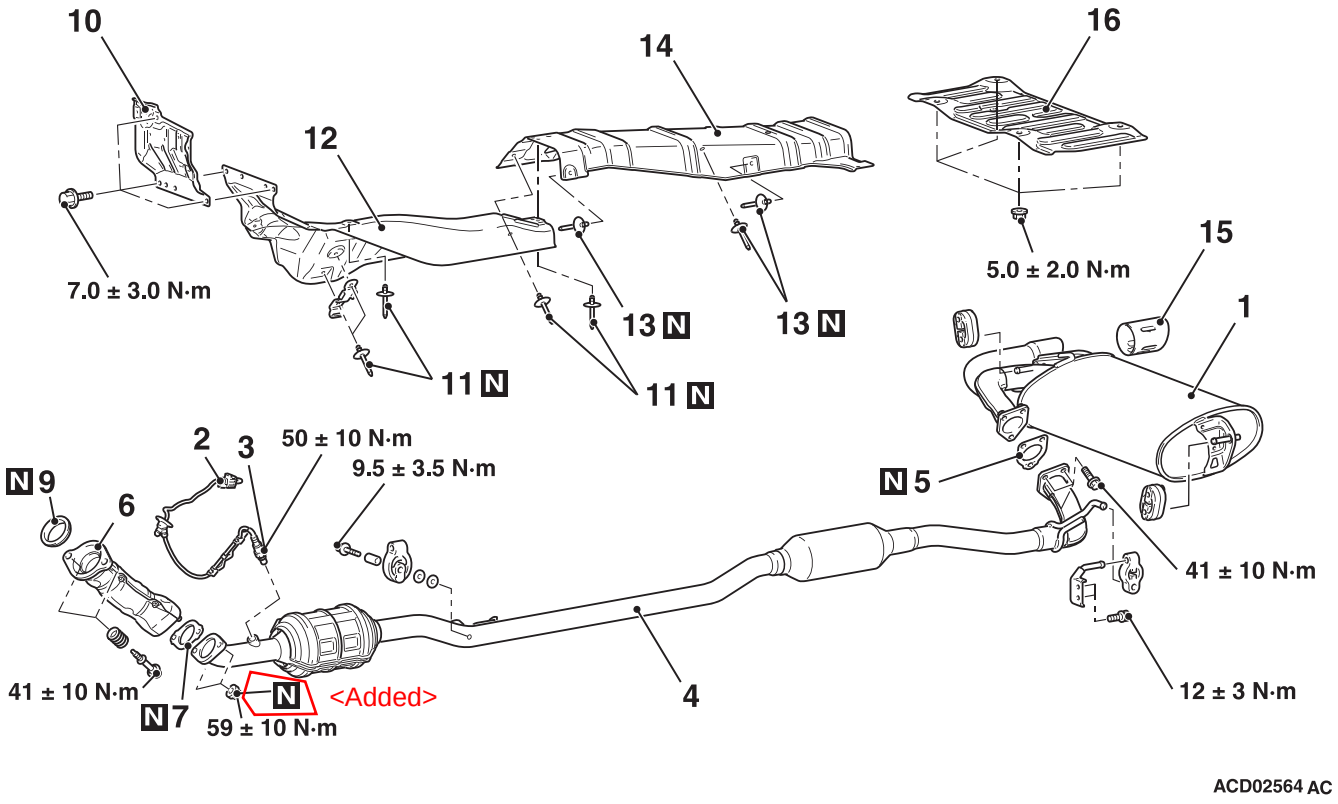
10
14
16
12
7.0 ± 3.0 N·m
5.0 ± 2.0 N·m
15
1
13 N
13 N
11 N
11 N
2
3
50 ± 10 N·m
9.5 ± 3.5 N·m
N 9
6
N 5
41 ± 10 N·m
41 ± 10 N·m
N 7
59 ± 10 N·m
N
<Added>
4
12 ± 3 N·m
ACD02564 AC

<4B1 (4WD)>

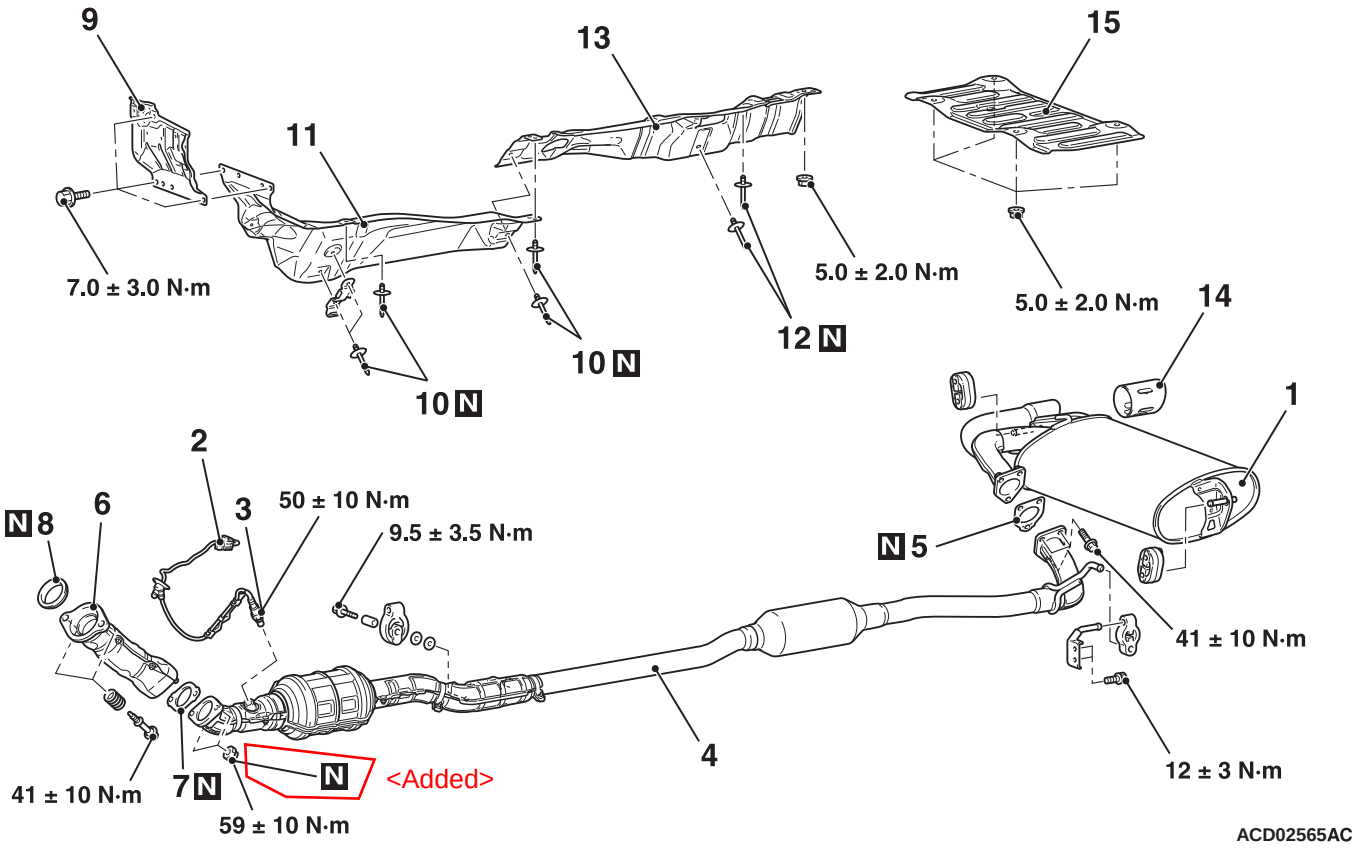
9
13
15
11
7.0 ± 3.0 N·m
5.0 ± 2.0 N·m
5.0 ± 2.0 N·m
14
1
12 N
10 N
10 N
2
N 8
6
3
50 ± 10 N·m
9.5 ± 3.5 N·m
N 5
41 ± 10 N·m
4
41 ± 10 N·m
7 N
N
<Added>
59 ± 10 N·m
12 ± 3 N·m
ACD02565AC

<4A9 (Except MMNA production)>

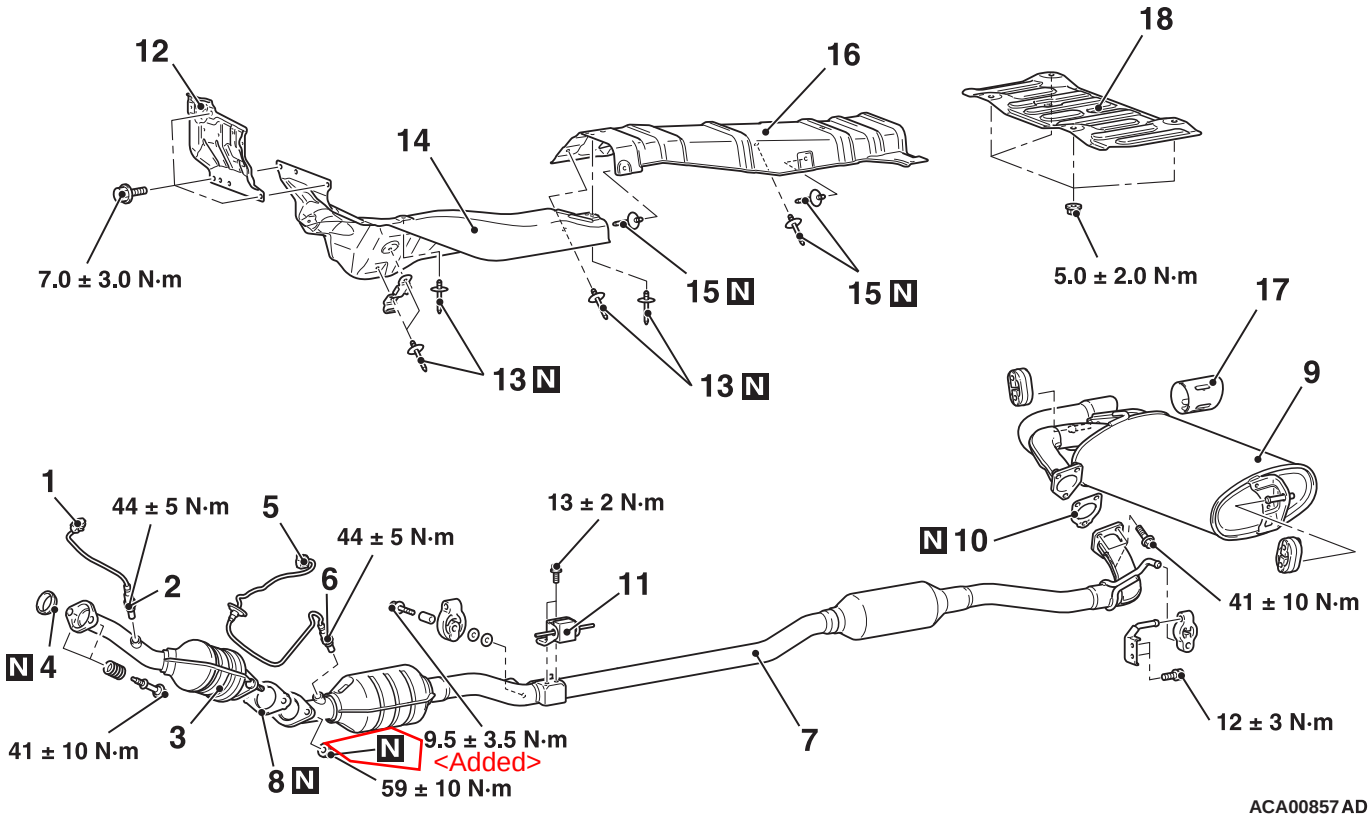

<4A9 (MMNA production)>

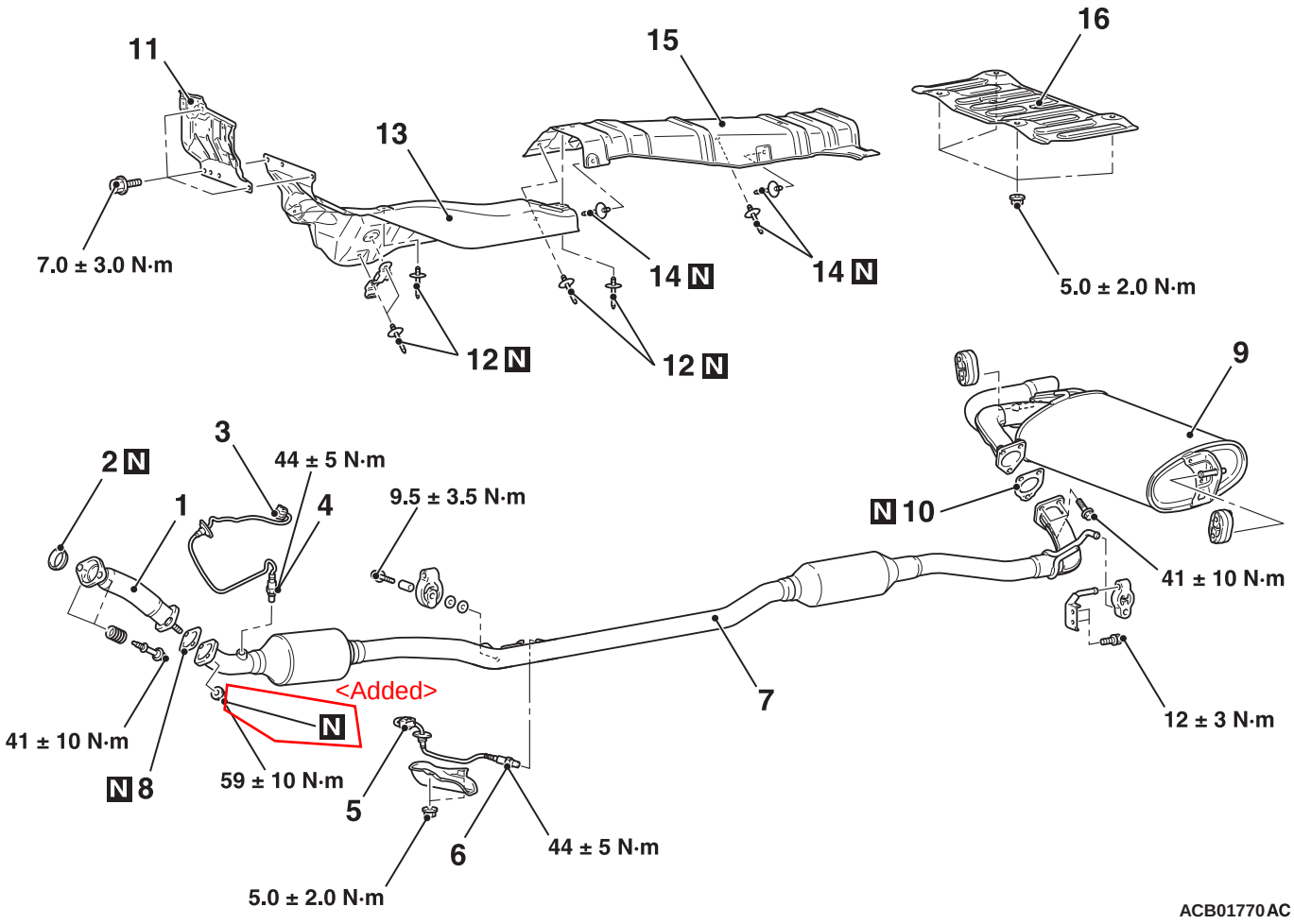

<4N1 (2WD)>

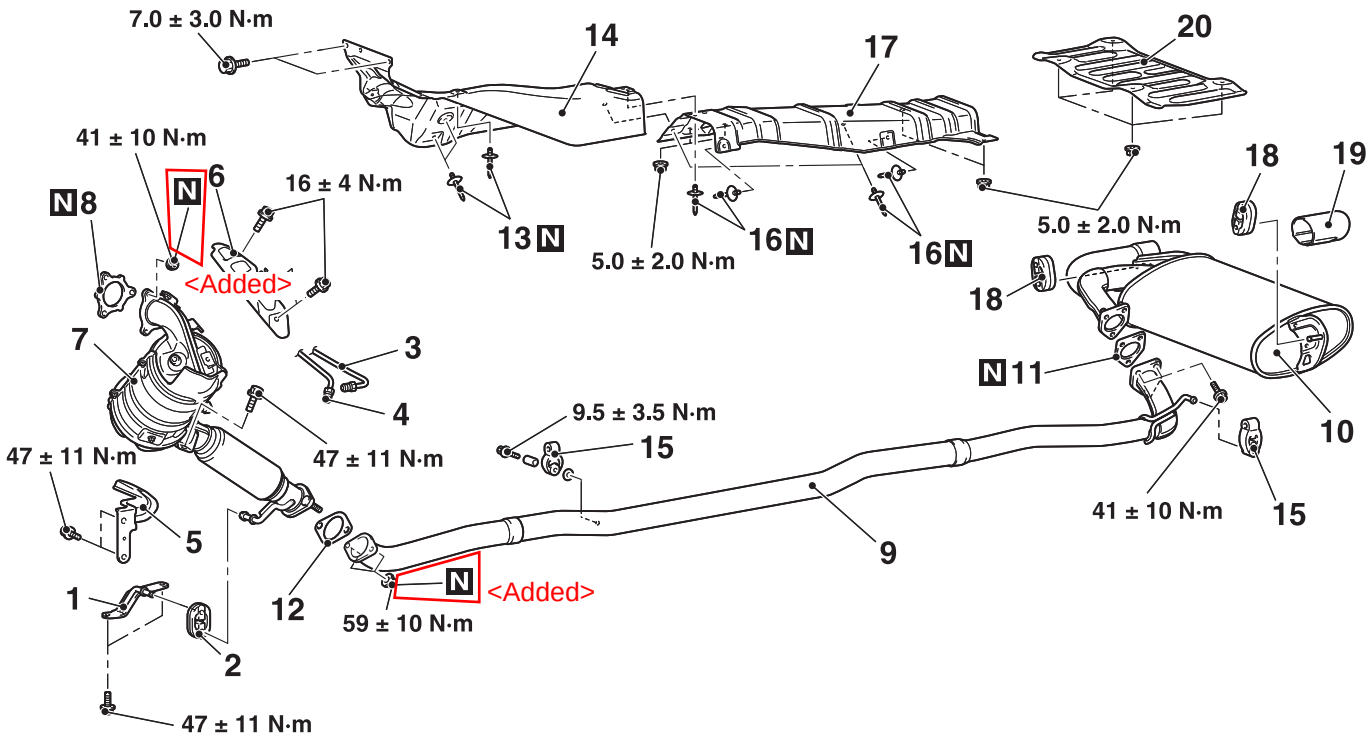

ACC02390 AC

<4N1 (4WD)>

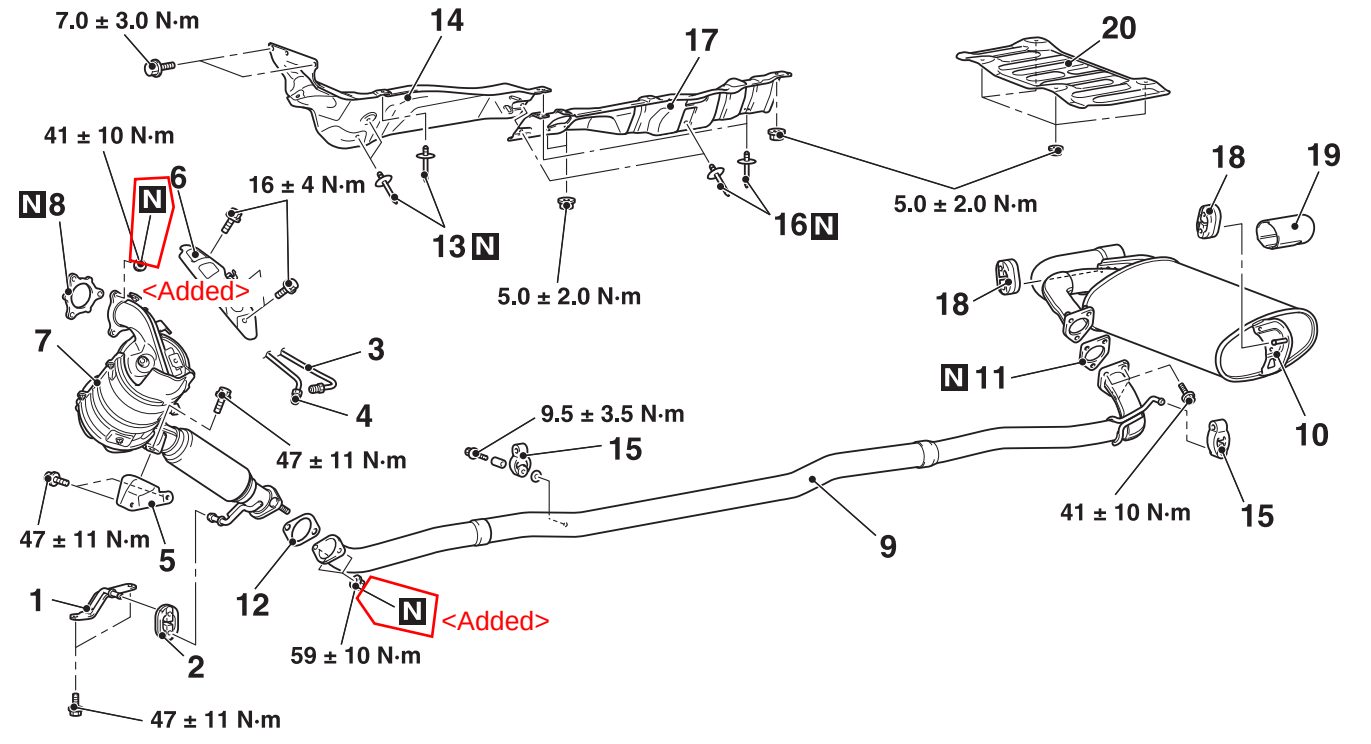

ACC02391 AC

<4N1 (2WD)>

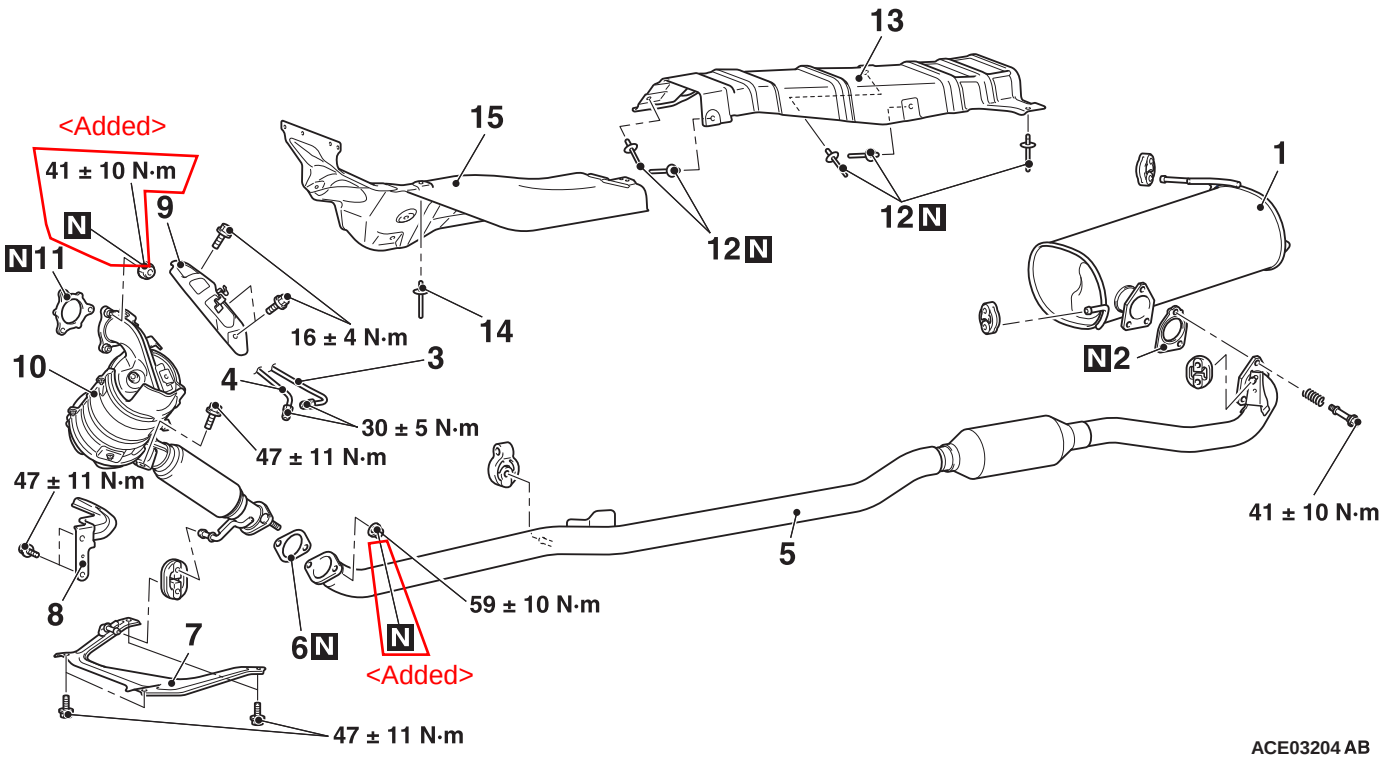

ACE03204 AB

<4N1 (4WD)>

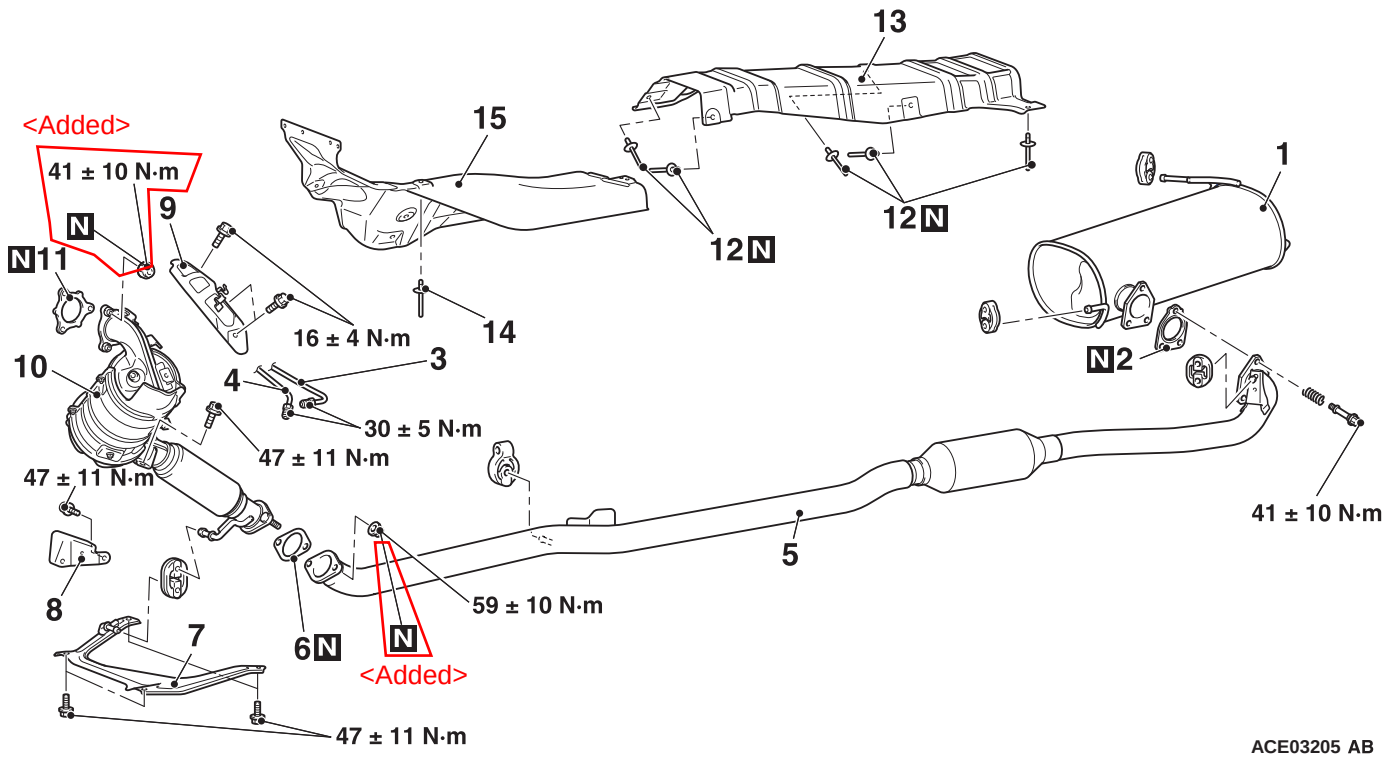

ACE03205 AB

<6B3>

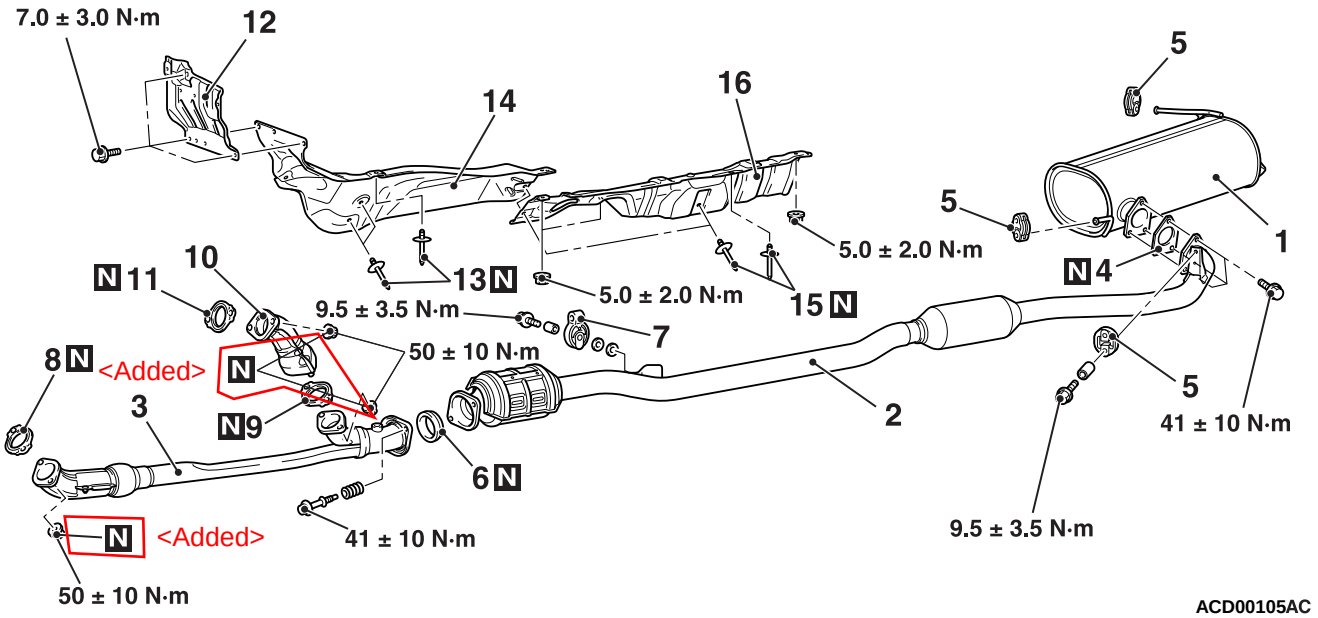
7.0 ± 3.0 N·m
12
14
16
5
5
1
5.0 ± 2.0 N·m
N 11
10
13 N
5.0 ± 2.0 N·m
15 N
N 4
9.5 ± 3.5 N·m
7
50 ± 10 N·m
8 N
<Added>
N
3
N 9
2
5
41 ± 10 N·m
6 N
N
<Added>
41 ± 10 N·m
9.5 ± 3.5 N·m
50 ± 10 N·m
ACD00105AC

<4G6>

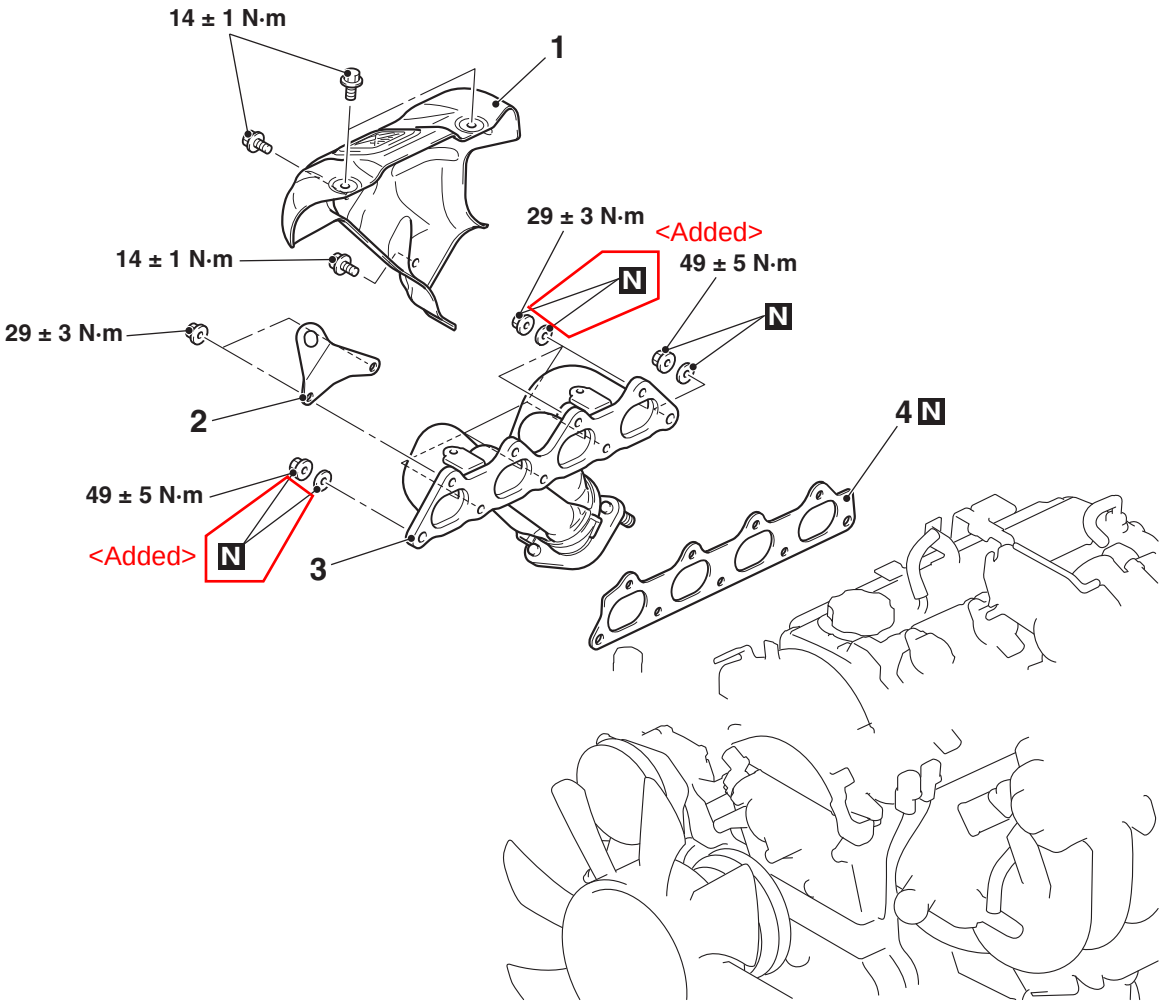

<4G6>

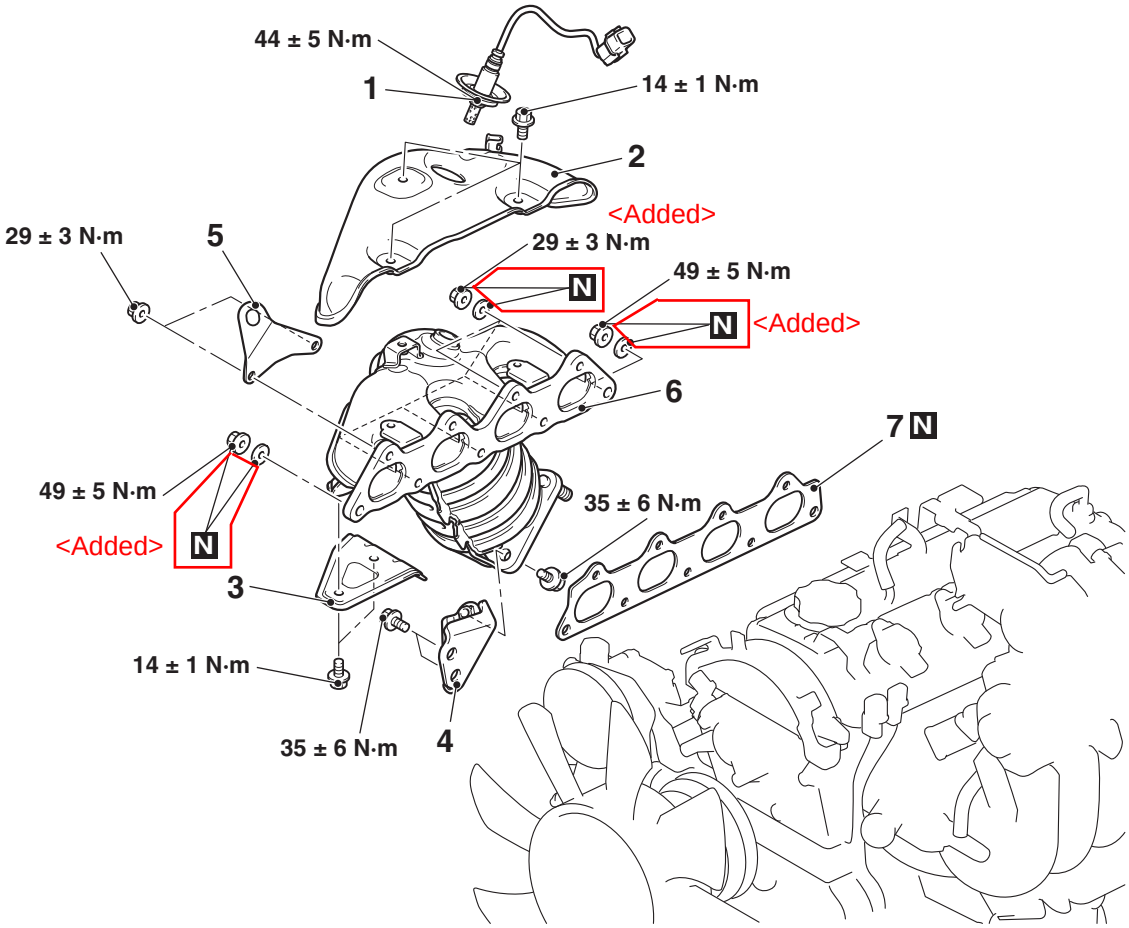
44 ± 5 N·m
1
14 ± 1 N·m
2
<Added>
29 ± 3 N·m
5
29 ± 3 N·m
N
49 ± 5 N·m
N
<Added>
6
7 N
49 ± 5 N·m
<Added>
N
35 ± 6 N·m
3
14 ± 1 N·m
35 ± 6 N·m
4

Attached sheet 13 (3/10)

<6G7>

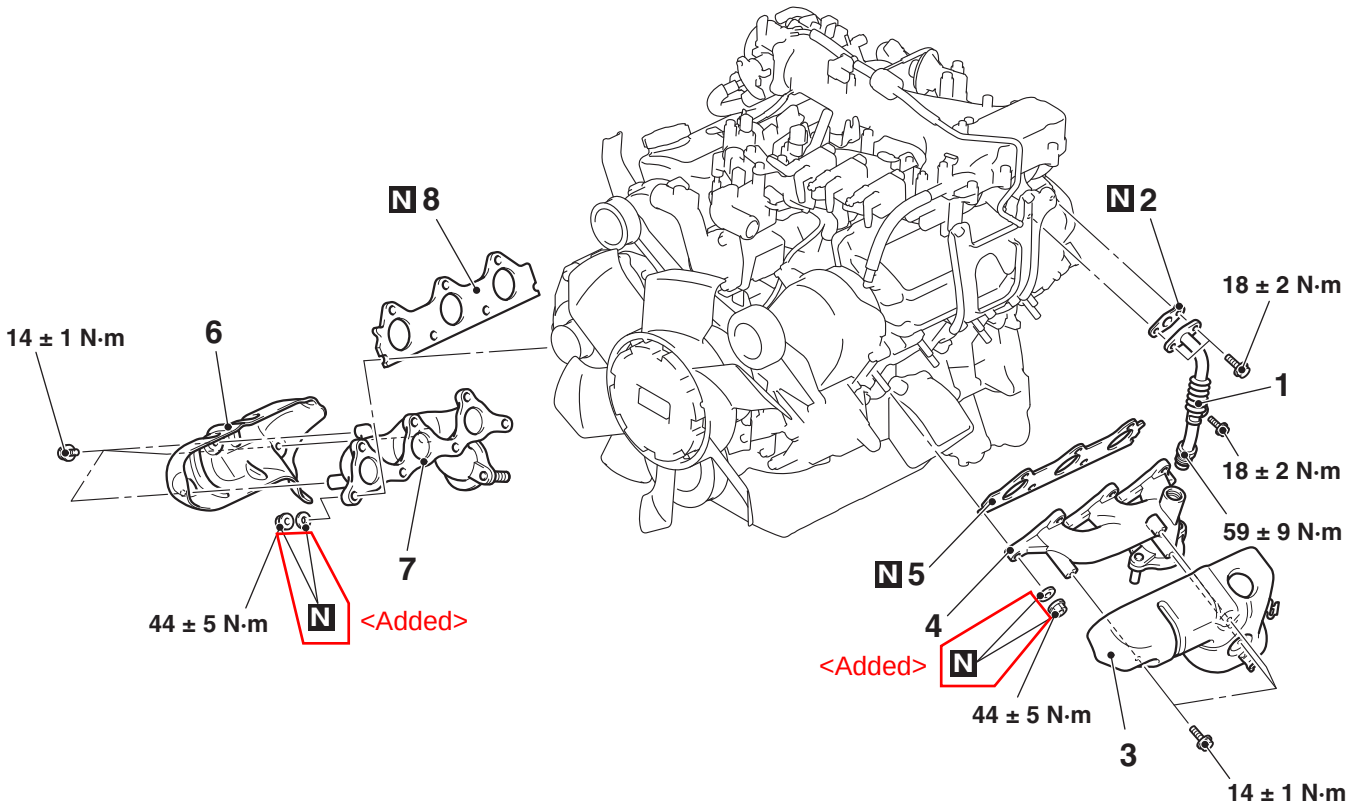

L200 / L200 SPORTERO / TRITON / STRADA / STRADA SPORTERO
<EXCEPT VEHICLES FOR GCC AND MEXICO>

Attached sheet 13 (4/10)

<4G6>

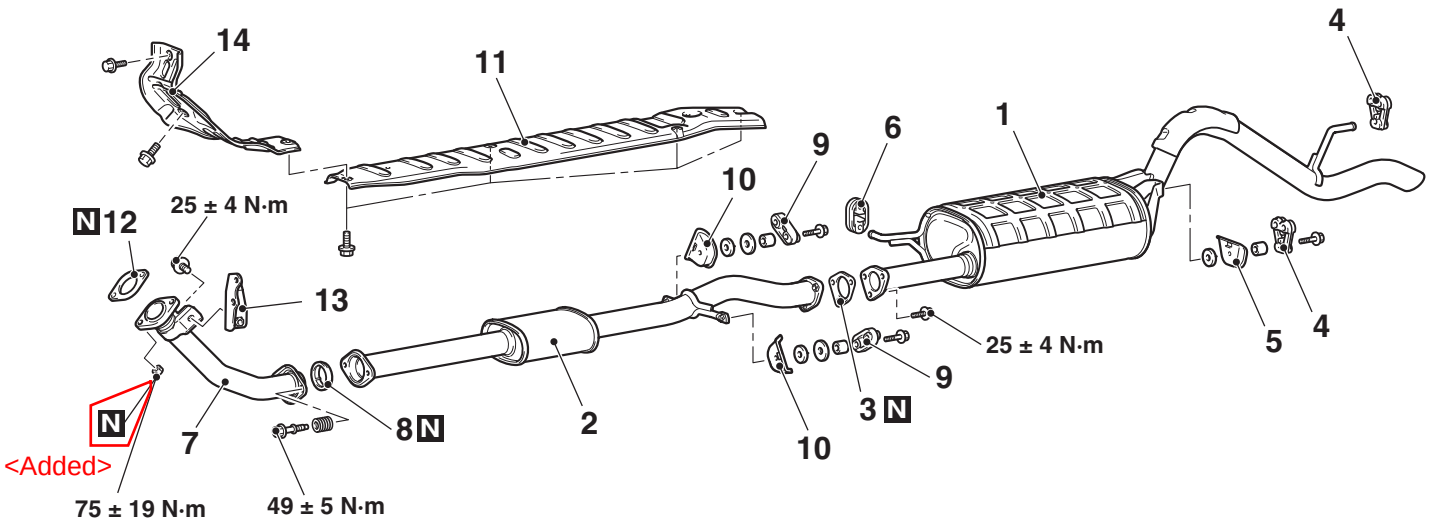

<4G6>

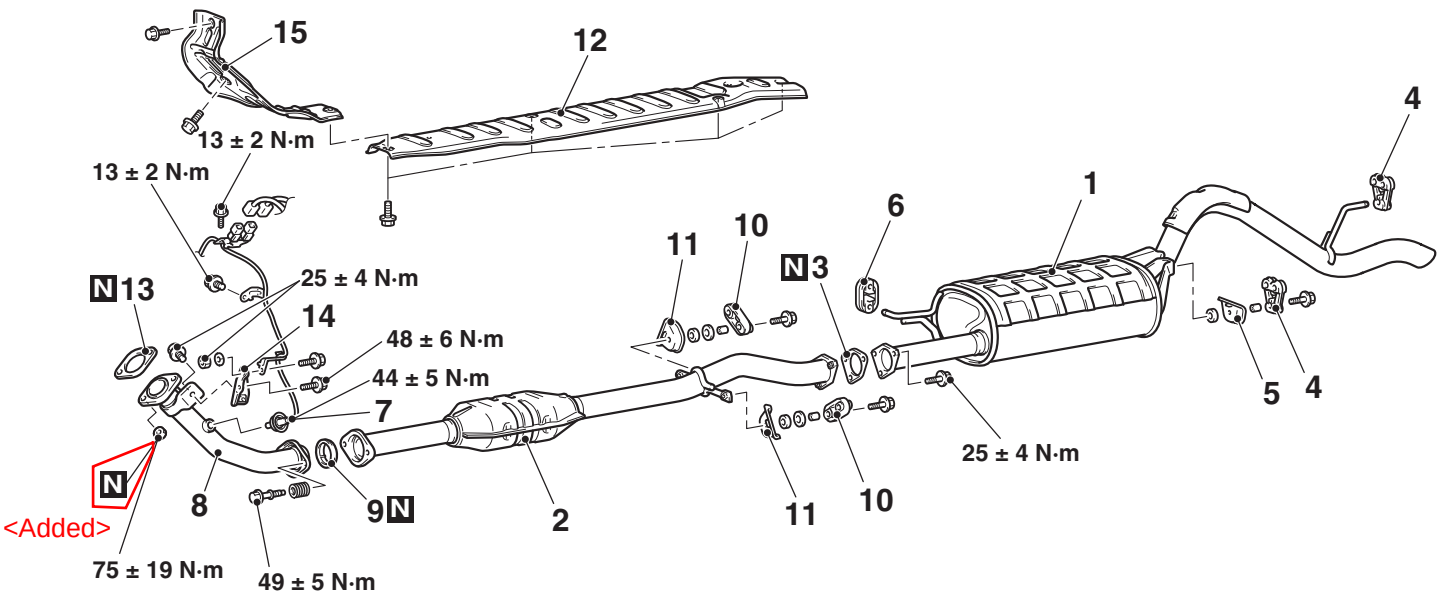
15
12
13 ± 2 N·m
13 ± 2 N·m
4
1
6
11
10
N 3
N 13
25 ± 4 N·m
14
48 ± 6 N·m
44 ± 5 N·m
7
5
4
25 ± 4 N·m
N
8
9 N
2
11
10
<Added>
75 ± 19 N·m
49 ± 5 N·m

<6G7>

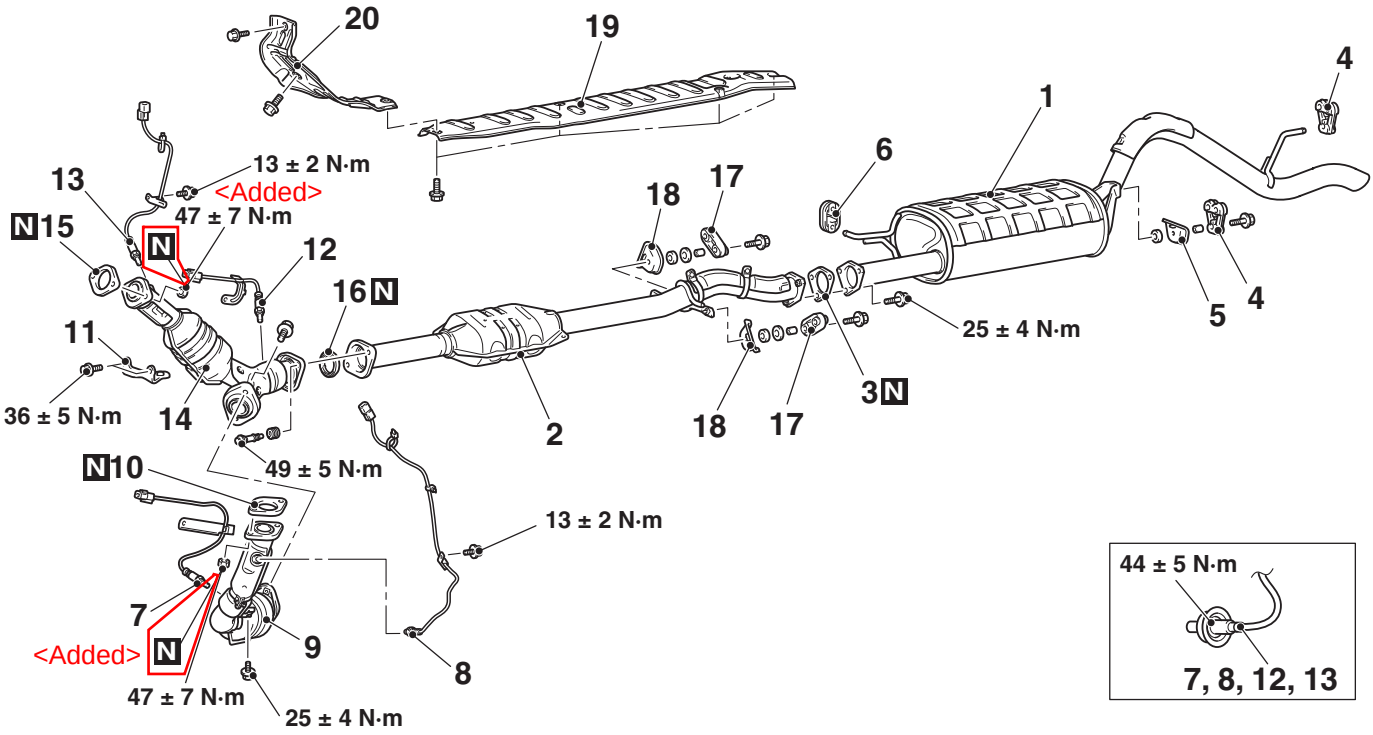
20
19
4
1
13 ± 2 N·m
<Added>
47 ± 7 N·m
13
N 15
N
12
16 N
18
17
6
11
36 ± 5 N·m
14
49 ± 5 N·m
2
18
17
25 ± 4 N·m
3 N
5
4
N 10
13 ± 2 N·m
7
<Added>
N
9
8
47 ± 7 N·m
25 ± 4 N·m
44 ± 5 N·m
7, 8, 12, 13

L200 / L200 SPORTERO / TRITON / TRADA / STRADA SPORTERO <EXCEPT VEHICLES FOR 4D5 (WITHOUT DPF)>

Attached sheet 13 (7/10)

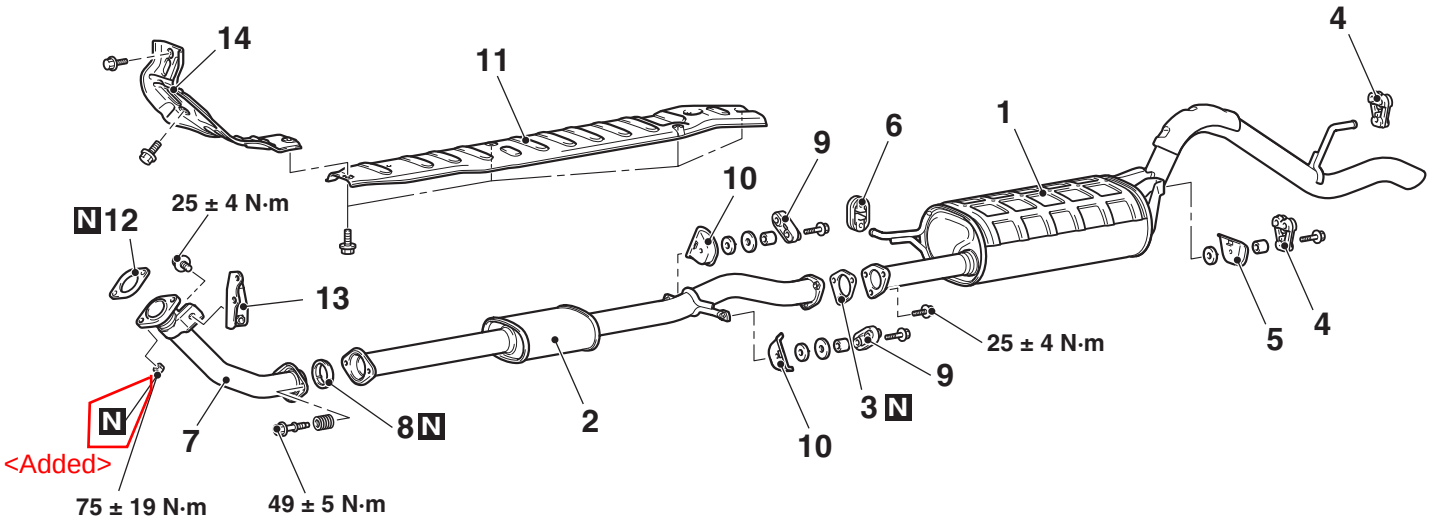

L200 / L200 SPORTERO / TRITON/TRADA / STRADA SPORTERO <EXCEPT VEHICLES FOR 4D5 (WITH DPF)>

Attached sheet 13 (8/10)

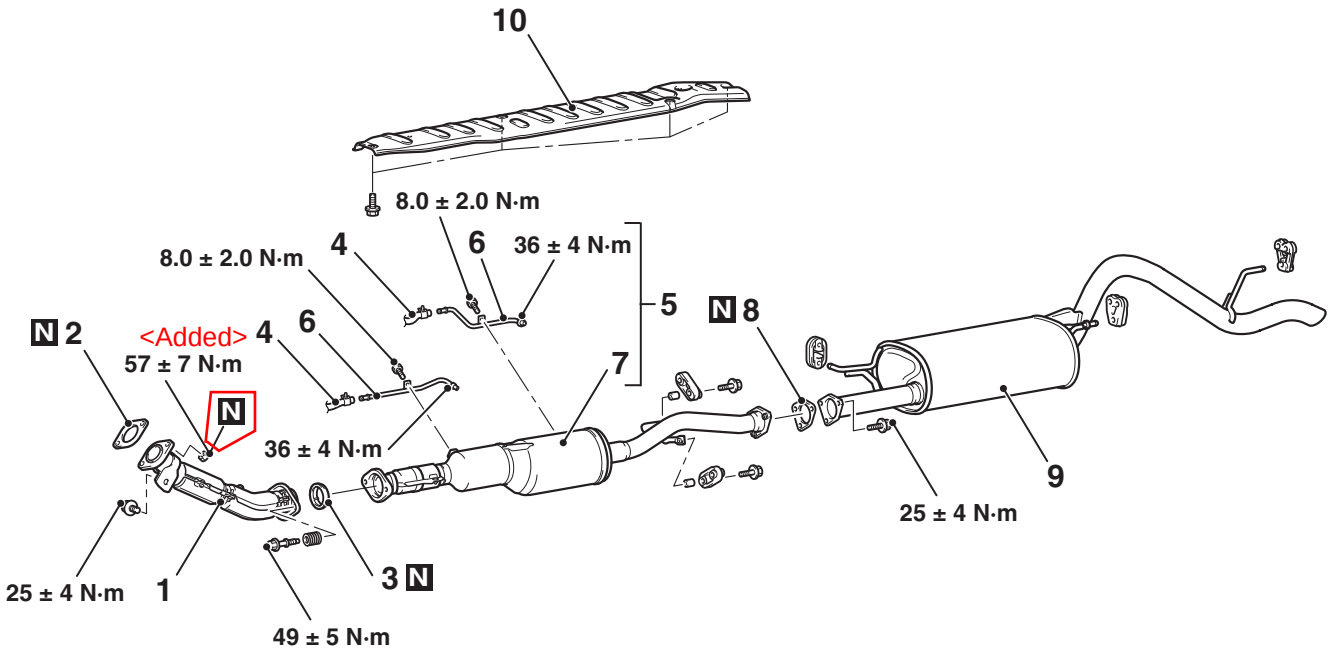

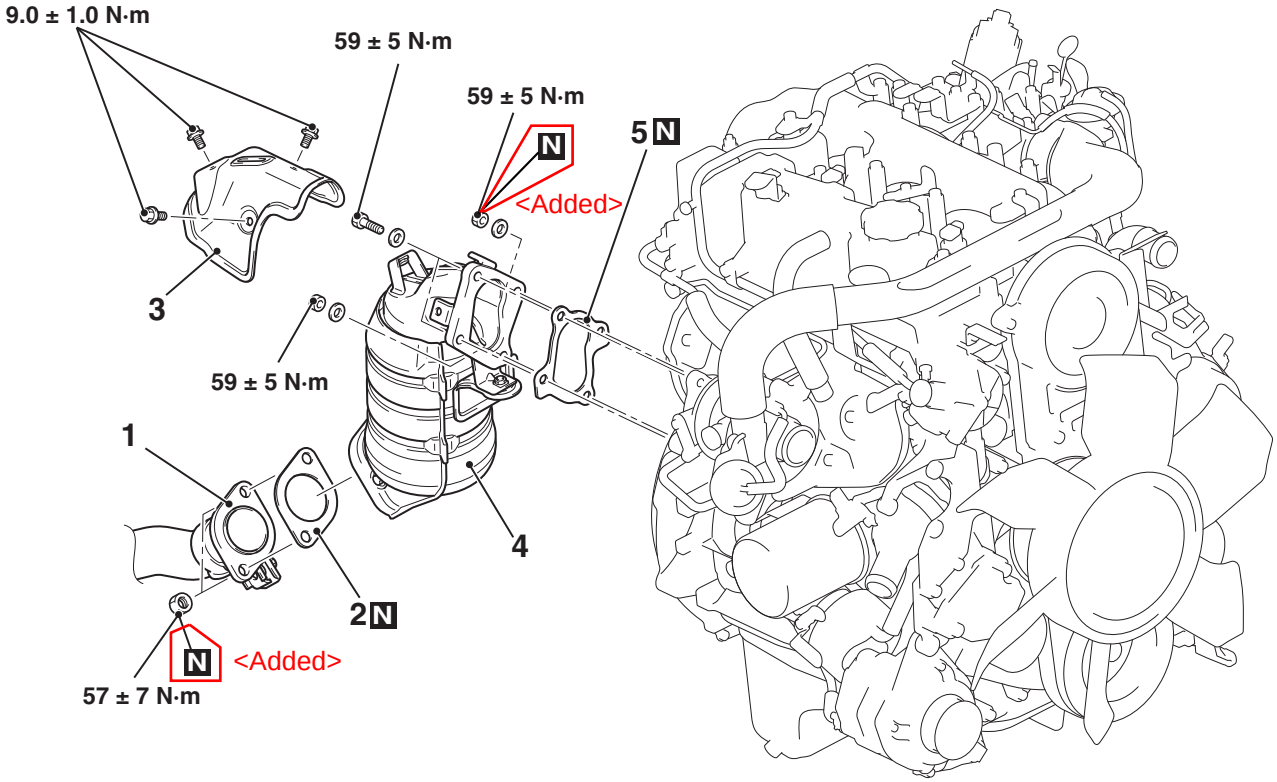
9.0 ± 1.0 N·m
59 ± 5 N·m
59 ± 5 N·m
N
<Added>
5 N
3
59 ± 5 N·m
1
4
2 N
N
<Added>
57 ± 7 N·m

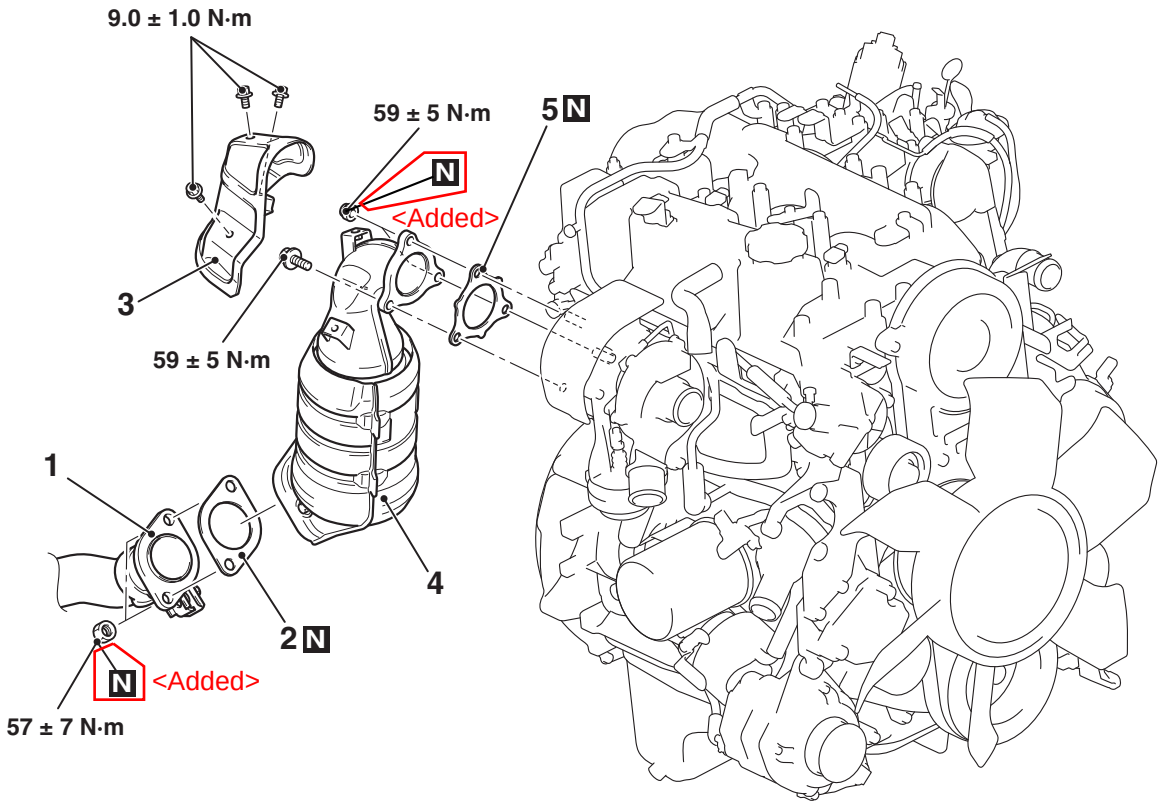
9.0 ± 1.0 N·m
59 ± 5 N·m
N
<Added>
5 N
3
59 ± 5 N·m
1
4
2 N
N
<Added>
57 ± 7 N·m

<4G6>

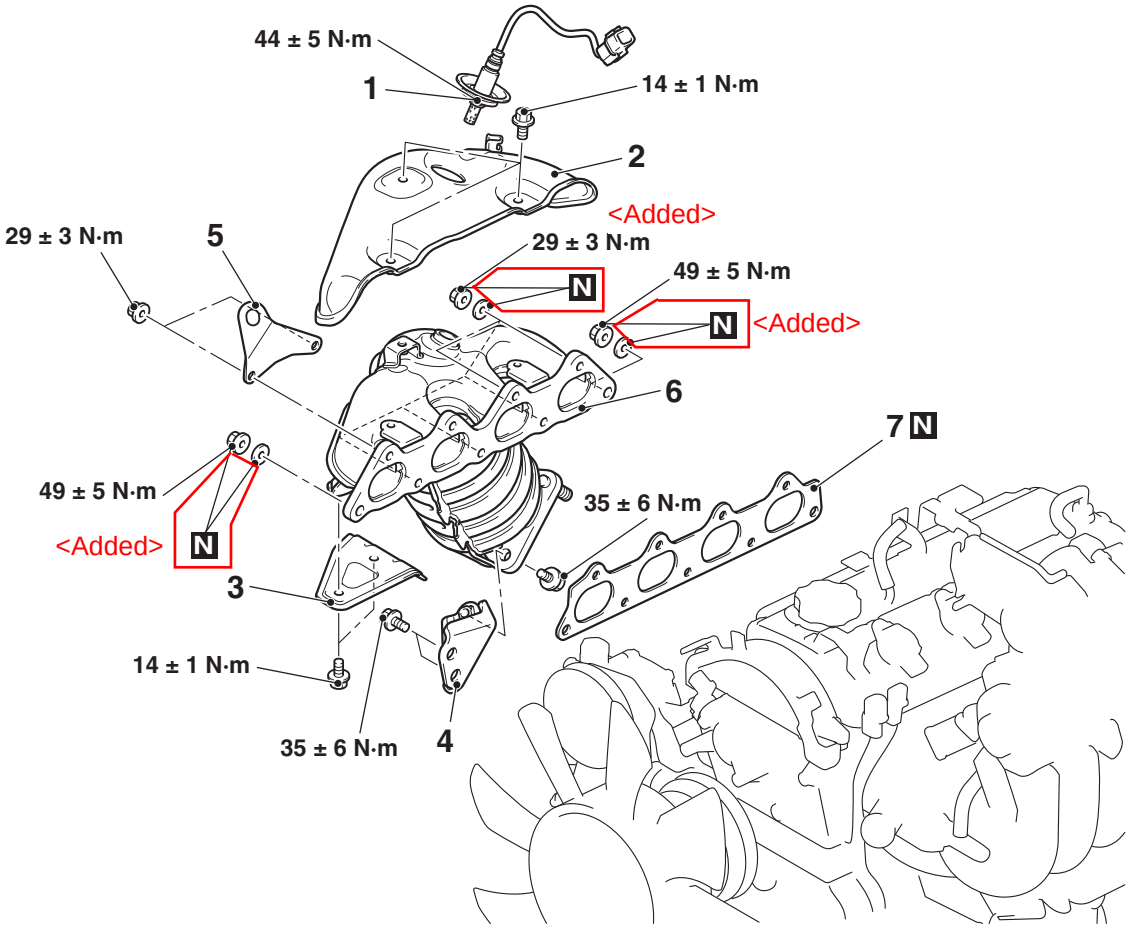
44 ± 5 N·m
1
14 ± 1 N·m
2
<Added>
29 ± 3 N·m
5
29 ± 3 N·m
N
49 ± 5 N·m
N
<Added>
6
7 N
49 ± 5 N·m
<Added>
N
35 ± 6 N·m
3
14 ± 1 N·m
35 ± 6 N·m
4

<6G7>

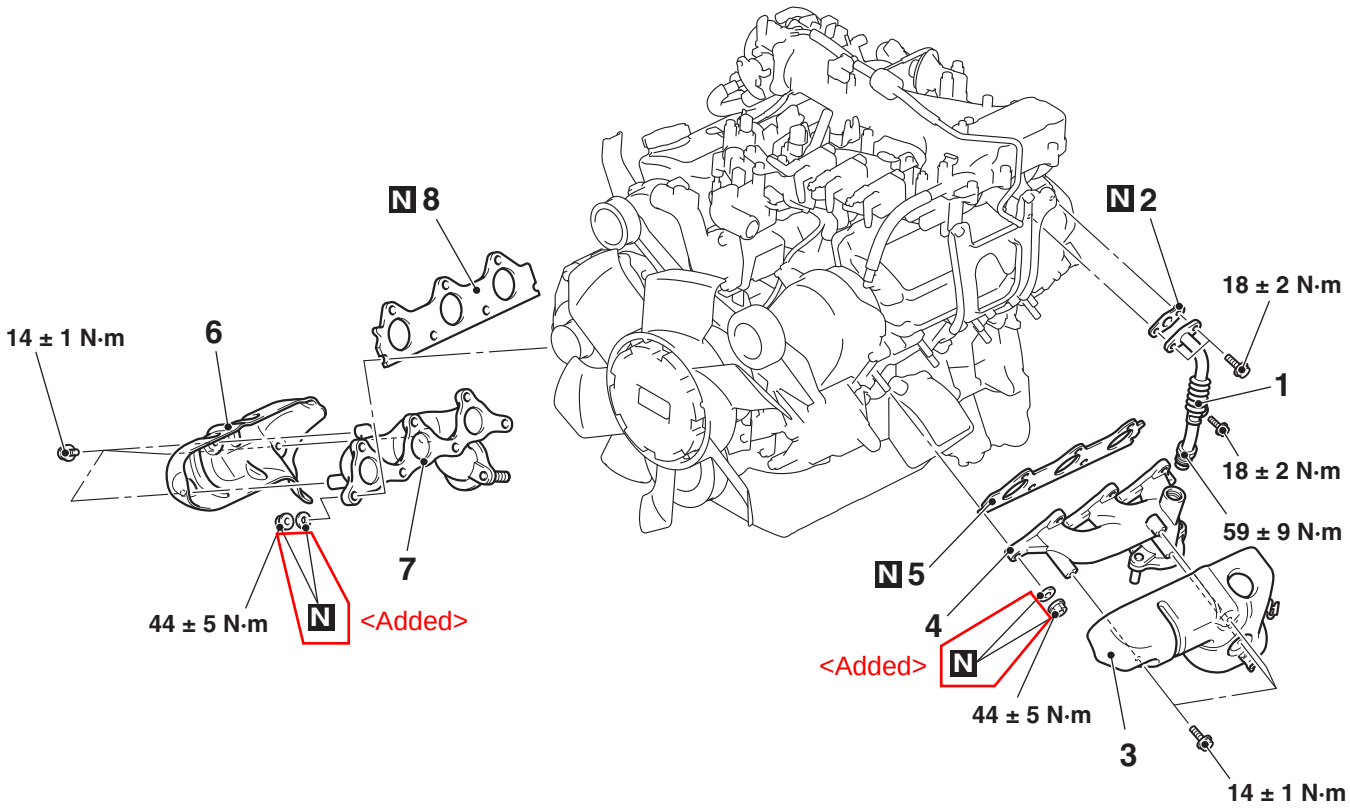
N 8
N 2
18 ± 2 N·m
14 ± 1 N·m
6
1
18 ± 2 N·m
59 ± 9 N·m
N 5
7
4
44 ± 5 N·m
N
<Added>
<Added>
N
44 ± 5 N·m
3
14 ± 1 N·m

<4G6>

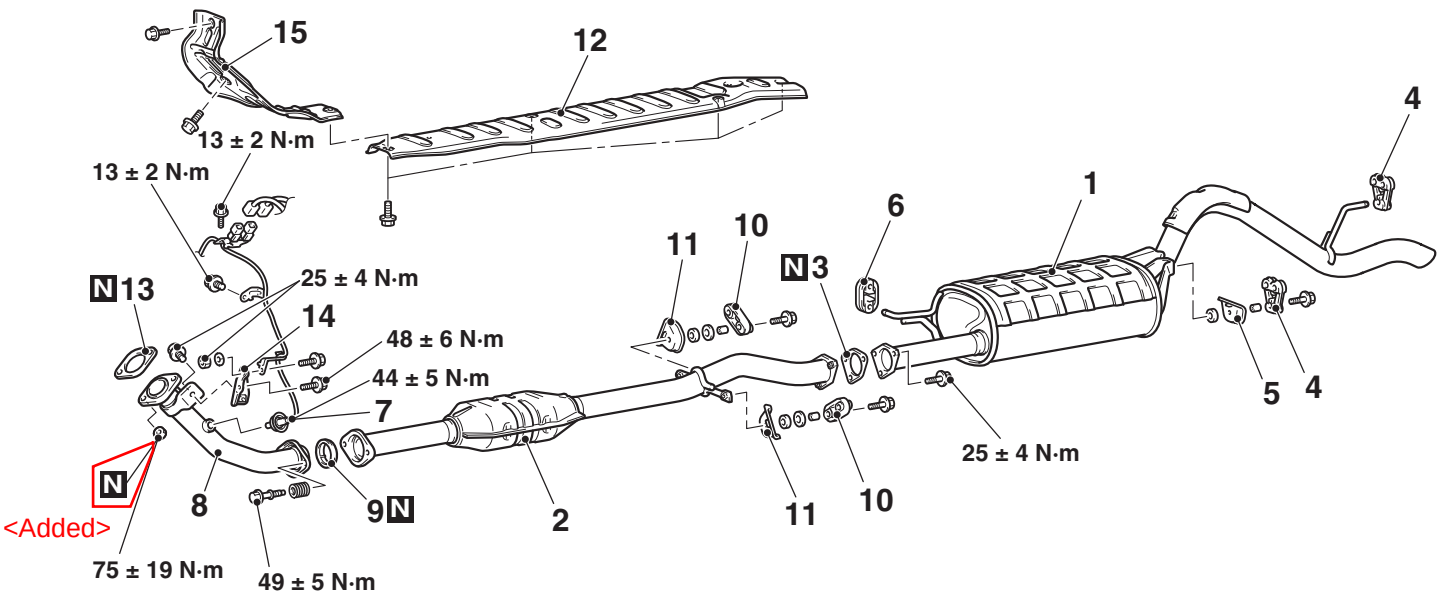
15
12
13 ± 2 N·m
13 ± 2 N·m
4
1
6
11
10
N 3
N 13
25 ± 4 N·m
14
48 ± 6 N·m
44 ± 5 N·m
7
5
4
25 ± 4 N·m
N
8
9 N
2
11
10
<Added>
75 ± 19 N·m
49 ± 5 N·m

<6G7>

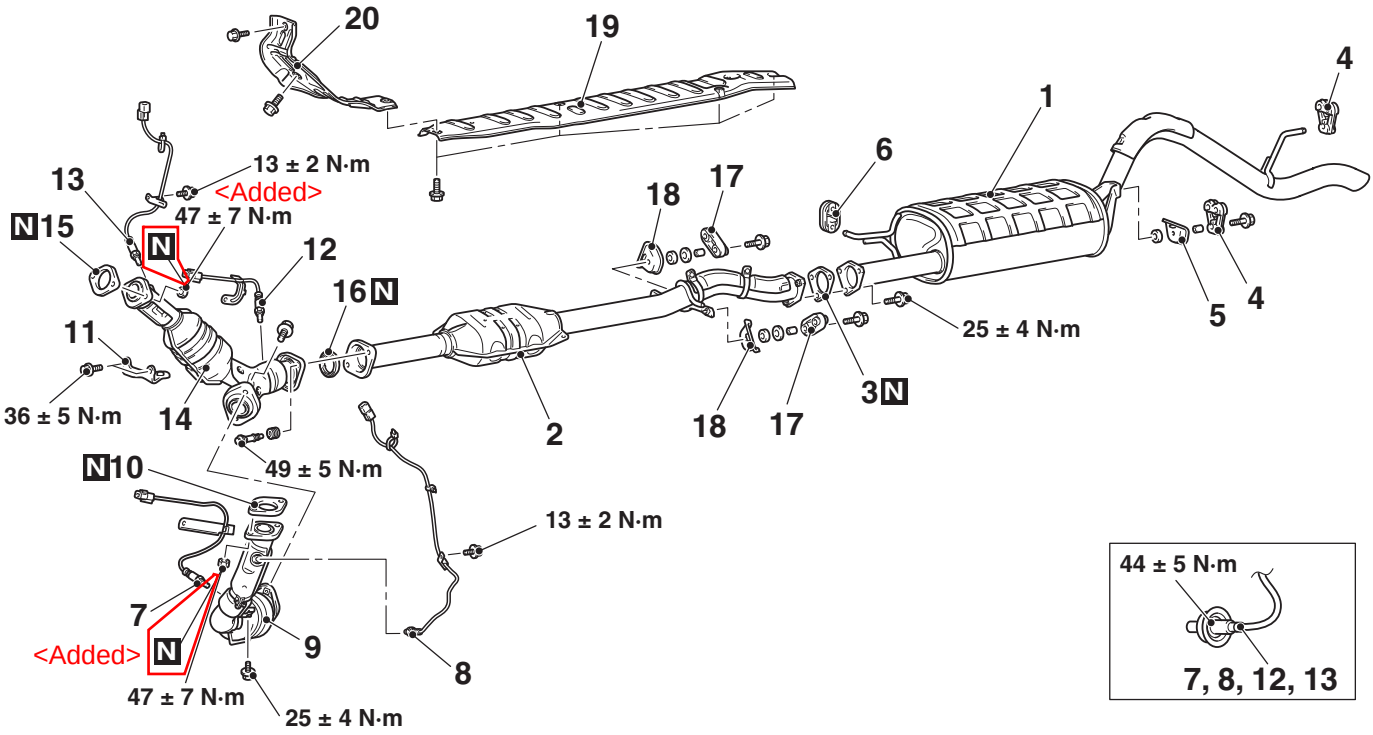
20
19
4
1
6
13
13 ± 2 N·m
<Added>
47 ± 7 N·m
N 15
N
12
18
17
16 N
11
36 ± 5 N·m
14
2
18
17
25 ± 4 N·m
3 N
5
4
49 ± 5 N·m
N 10
13 ± 2 N·m
7
<Added>
N
9
8
47 ± 7 N·m
25 ± 4 N·m
44 ± 5 N·m
7, 8, 12, 13

PAJERO SPORT /NATIVA / MONTERO SPORT / CHALLENGER <EXCEPT VEHICLES FOR 4D5 (WITHOUT DPF)>

Attached sheet 14 (5/9)

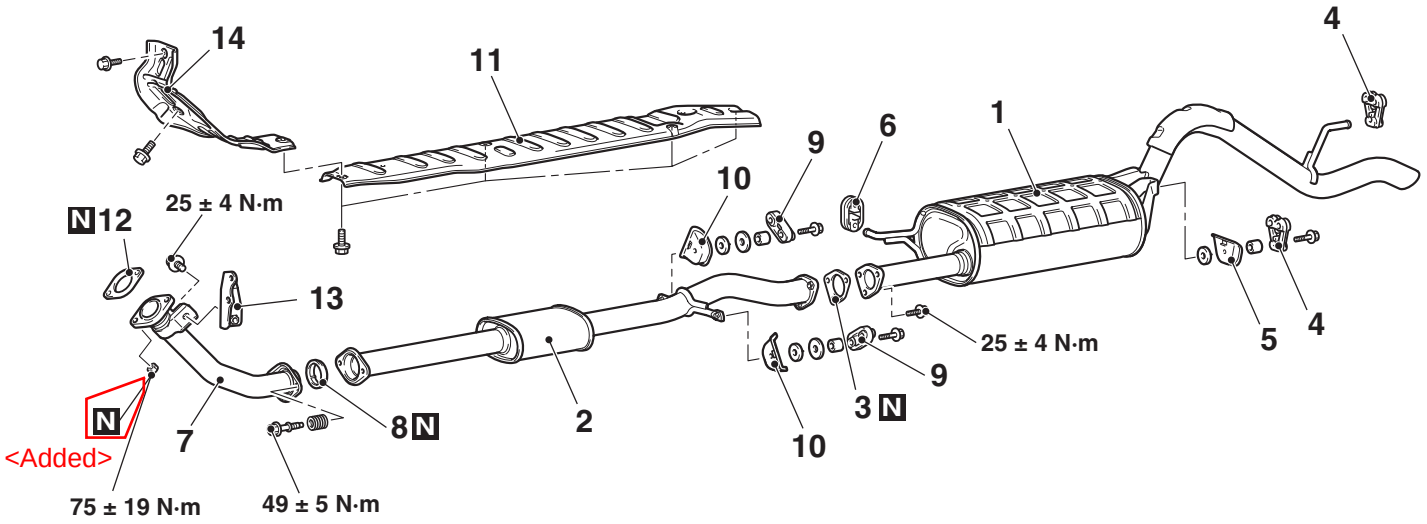

PAJERO SPORT / NATIVA / MONTERO SPORT / CHALLENGER <EXCEPT VEHICLES FOR 4D5 (WITH DPF)>

Attached sheet 14 (6/9)

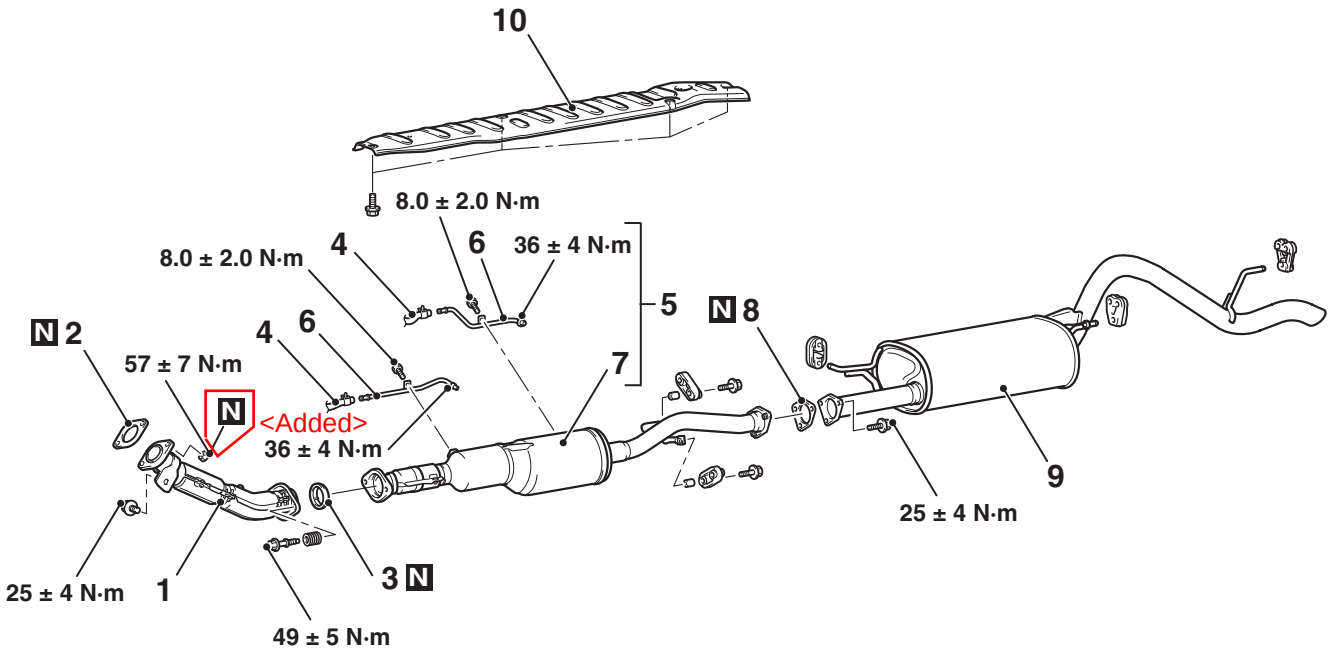

<4M41>

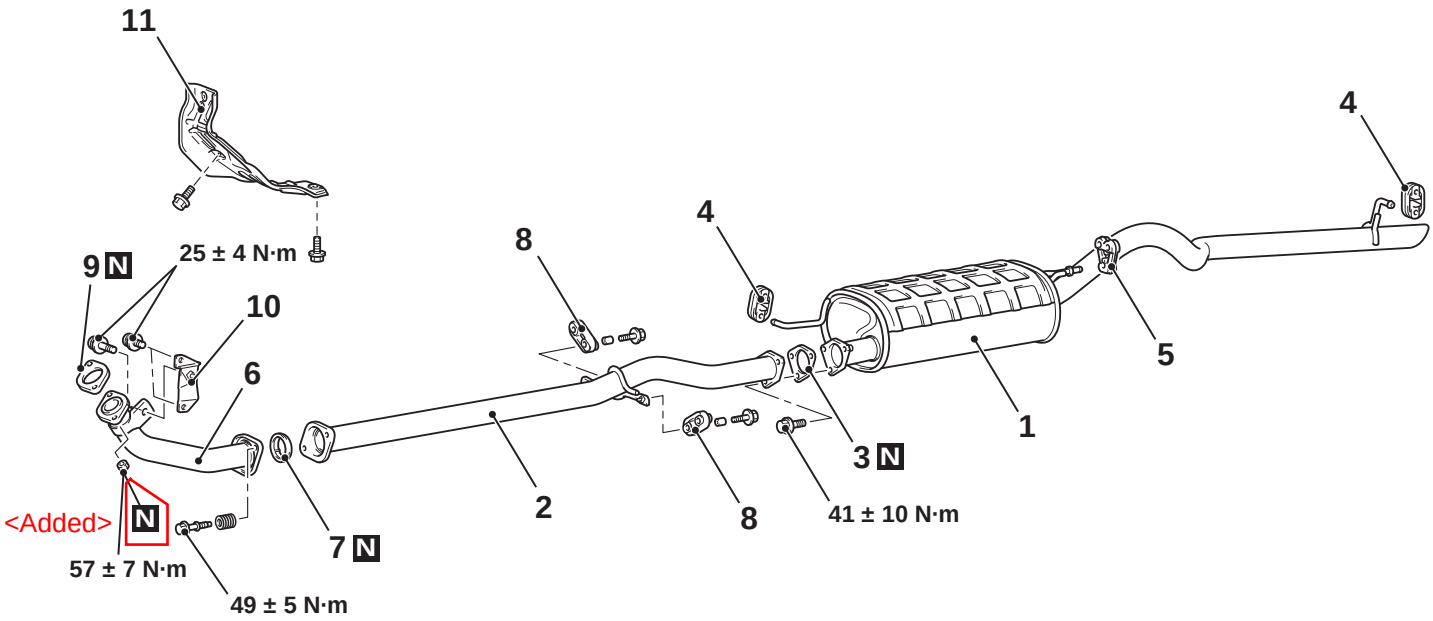
11
25 ± 4 N·m
9 N
10
6
<Added>
N
57 ± 7 N·m
49 ± 5 N·m
7 N
2
8
4
8
4
41 ± 10 N·m
3 N
1
5
AC903799AB

PAJERO SPORT / NATIVA/MONTERO SPORT / CHALLENGER <EXCEPT VEHICLES FOR 4D5 (EXCEPT HIGH POWER ENGINE)>

Attached sheet 14 (8/9)

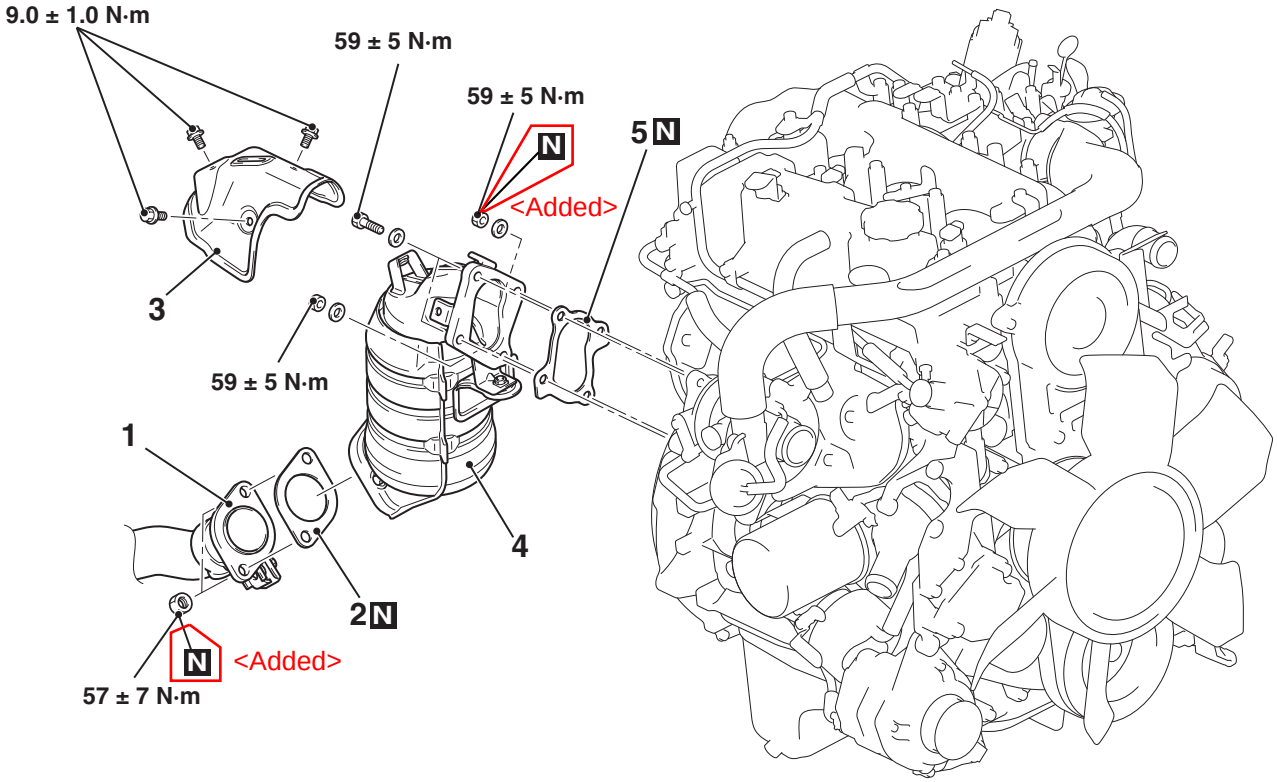

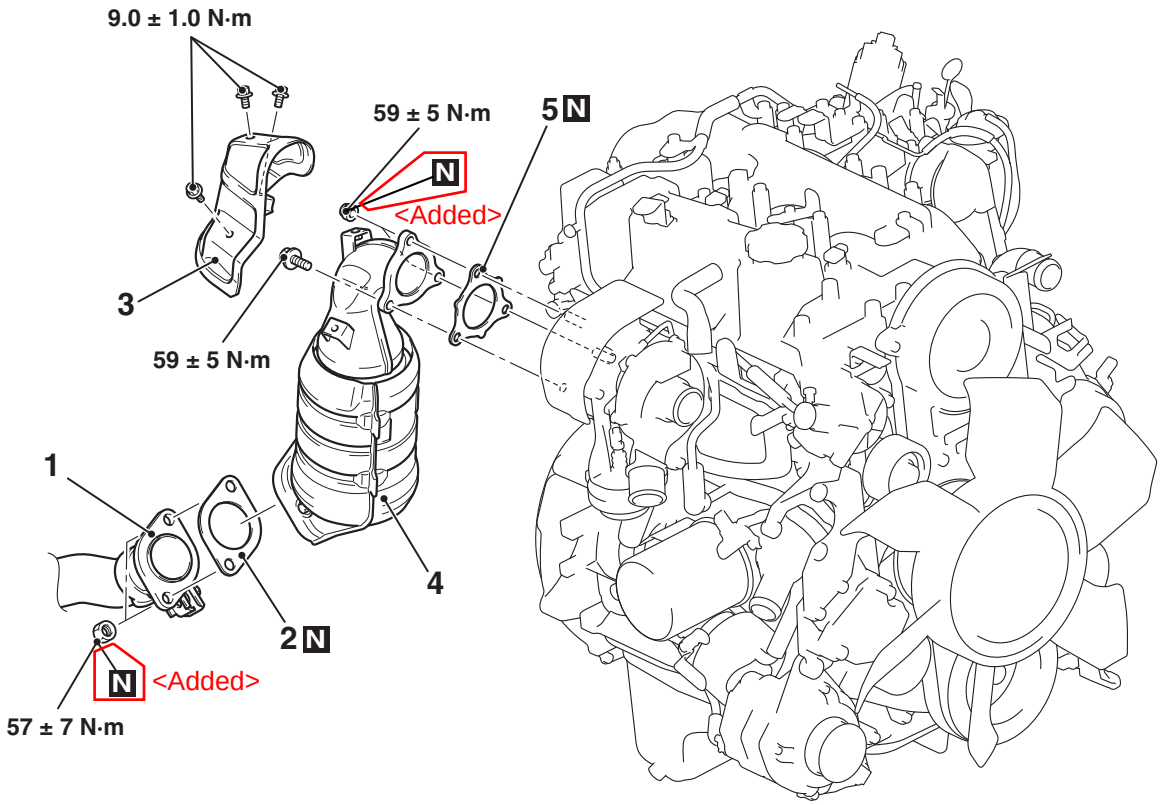
9.0 ± 1.0 N·m
59 ± 5 N·m
N
<Added>
5 N
3
59 ± 5 N·m
1
4
2 N
N
<Added>
57 ± 7 N·m

<6G72>

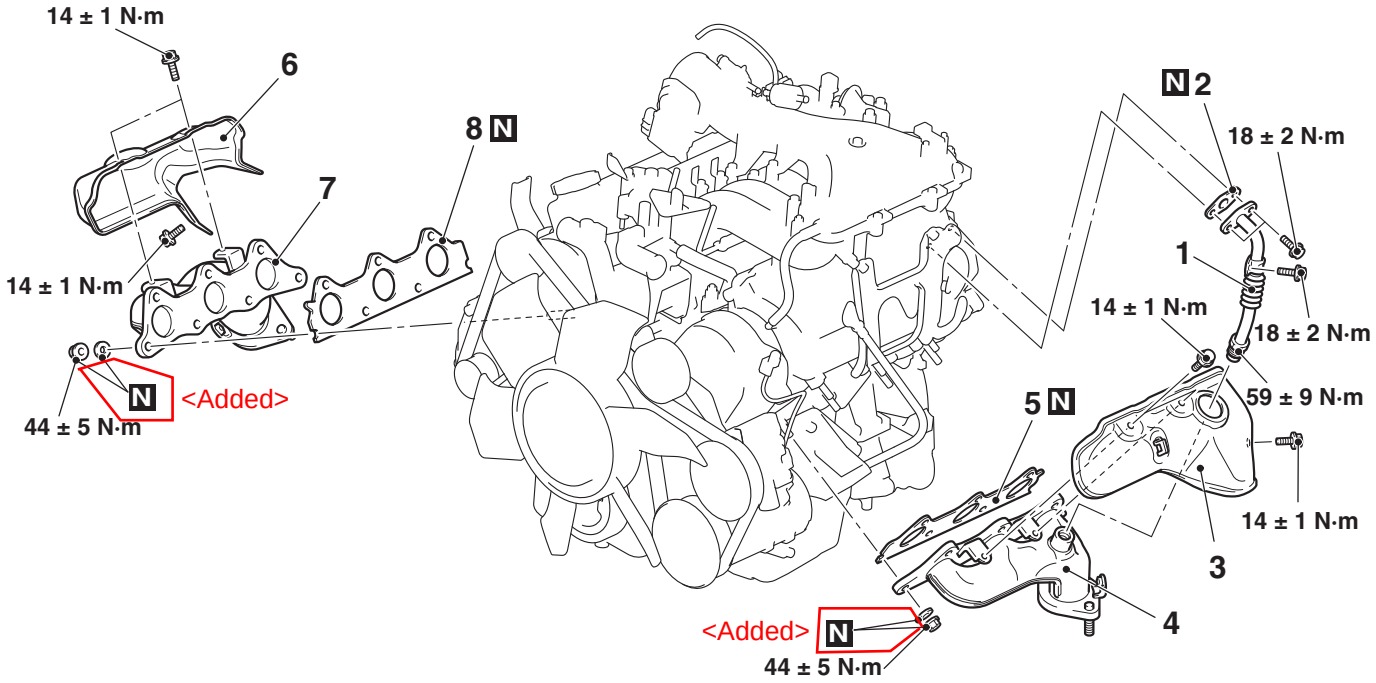
14 ± 1 N·m
6
8 N
7
14 ± 1 N·m
N
<Added>
44 ± 5 N·m
N 2
18 ± 2 N·m
1
14 ± 1 N·m
18 ± 2 N·m
59 ± 9 N·m
5 N
14 ± 1 N·m
3
4
<Added>
N
44 ± 5 N·m

<6G75>

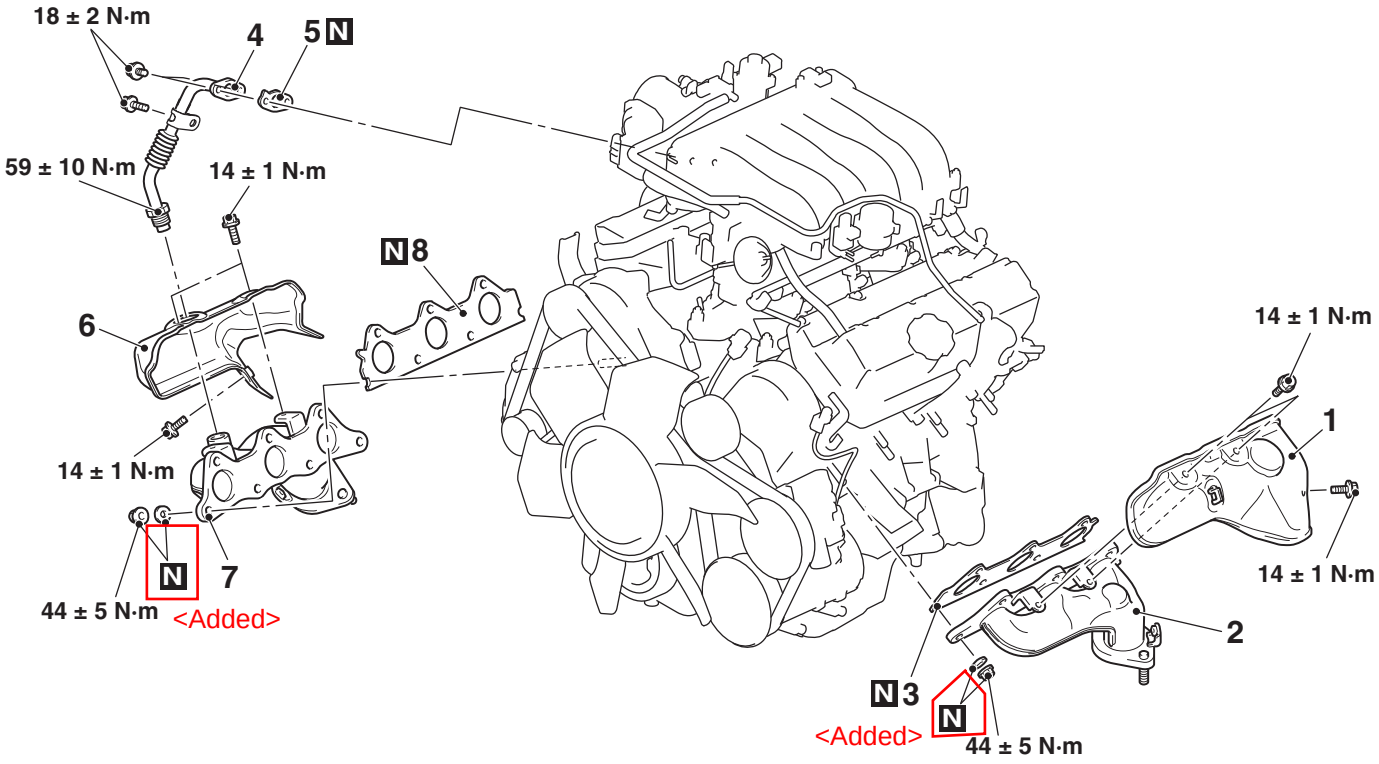
18 ± 2 N·m
4
5 N
59 ± 10 N·m
14 ± 1 N·m
N 8
6
14 ± 1 N·m
N
7
44 ± 5 N·m
<Added>
14 ± 1 N·m
1
14 ± 1 N·m
2
N 3
N
<Added>
44 ± 5 N·m

<6G7 (Short wheelbase)>

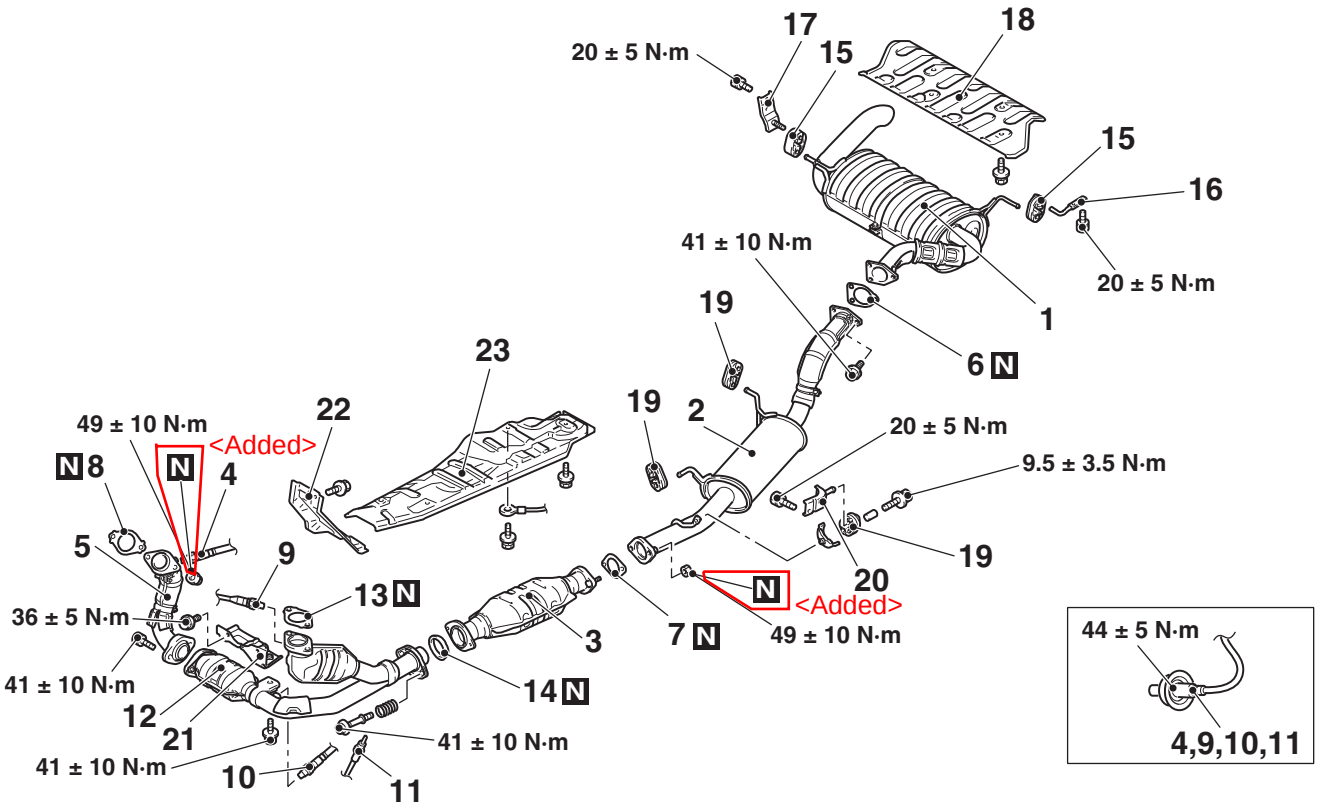

<6G7 (Long wheelbase)>

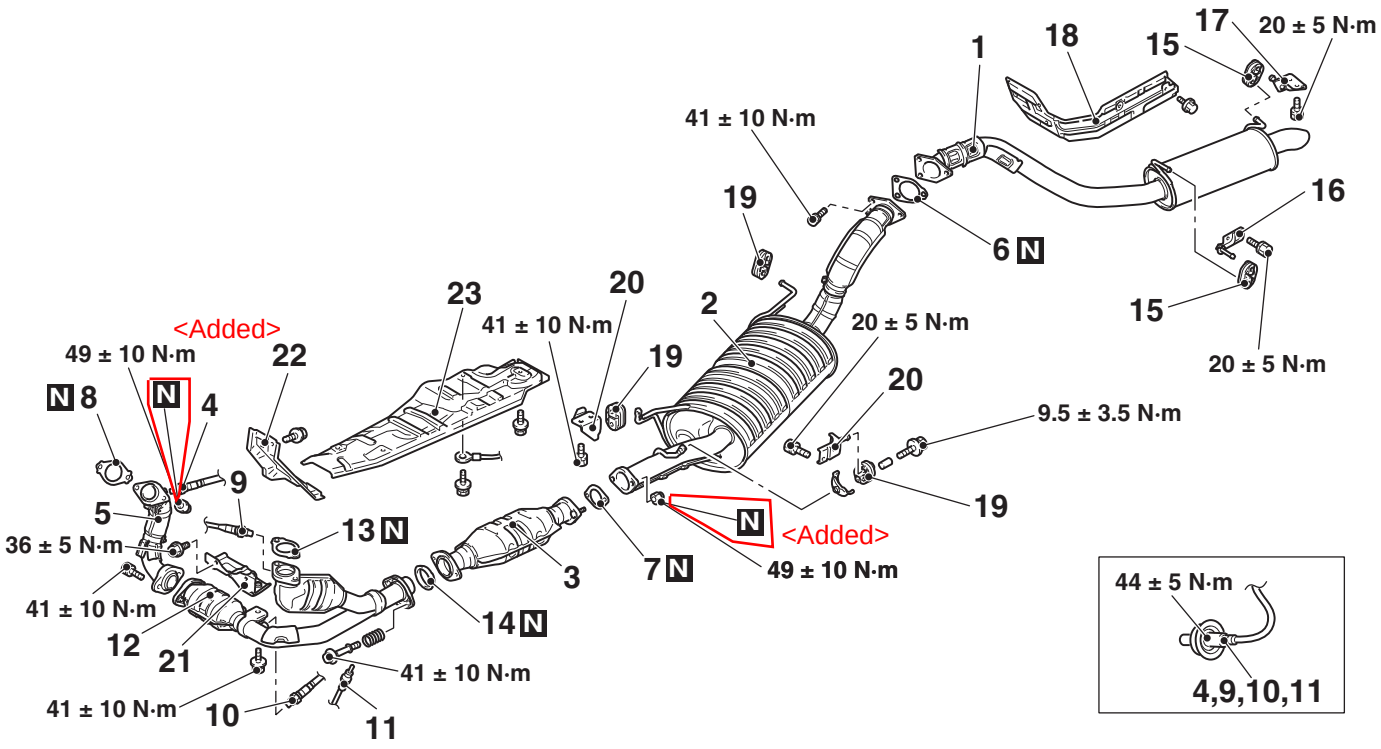

<4M41 (VEHICLES WITHOUT DPF)>

Short wheelbase

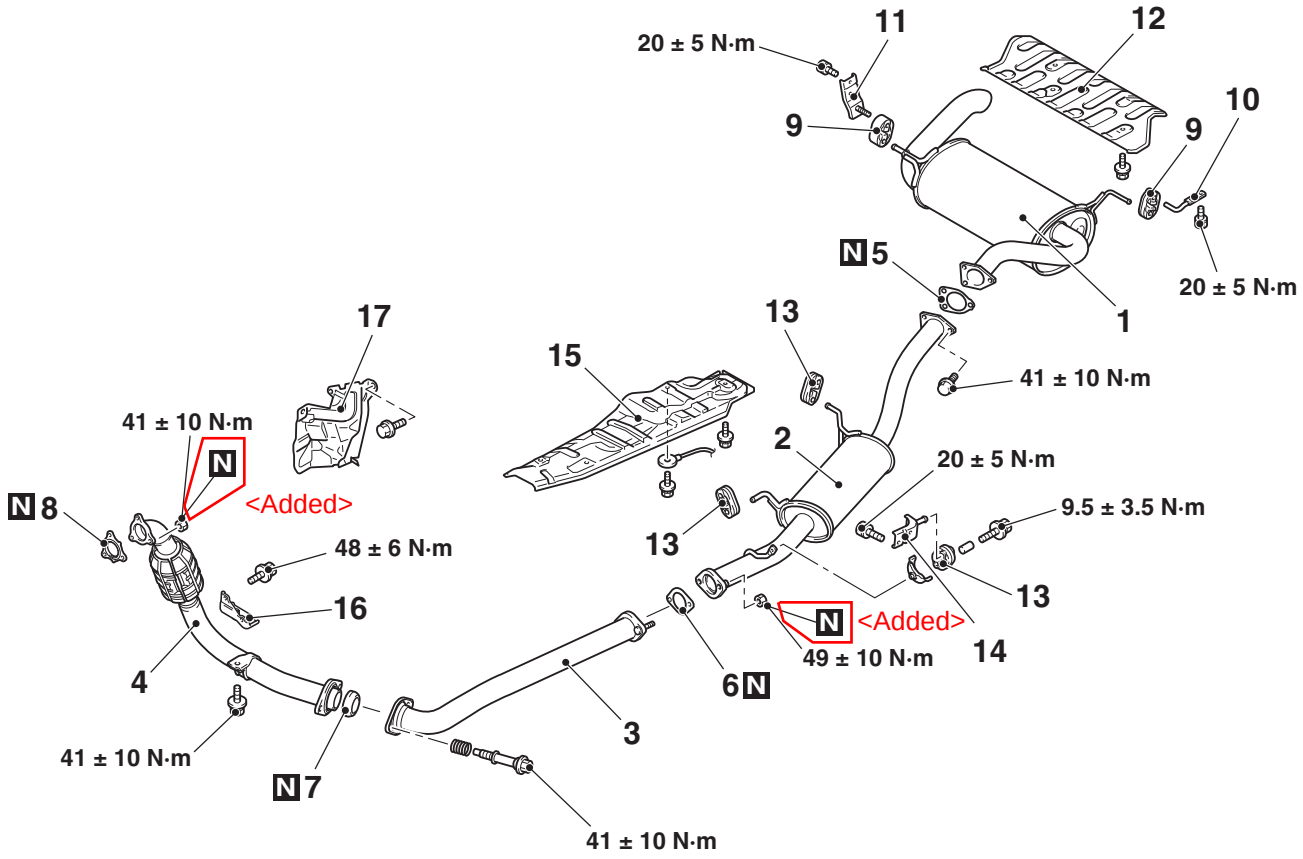

<4M41 (VEHICLES WITHOUT DPF)>

Long wheelbase

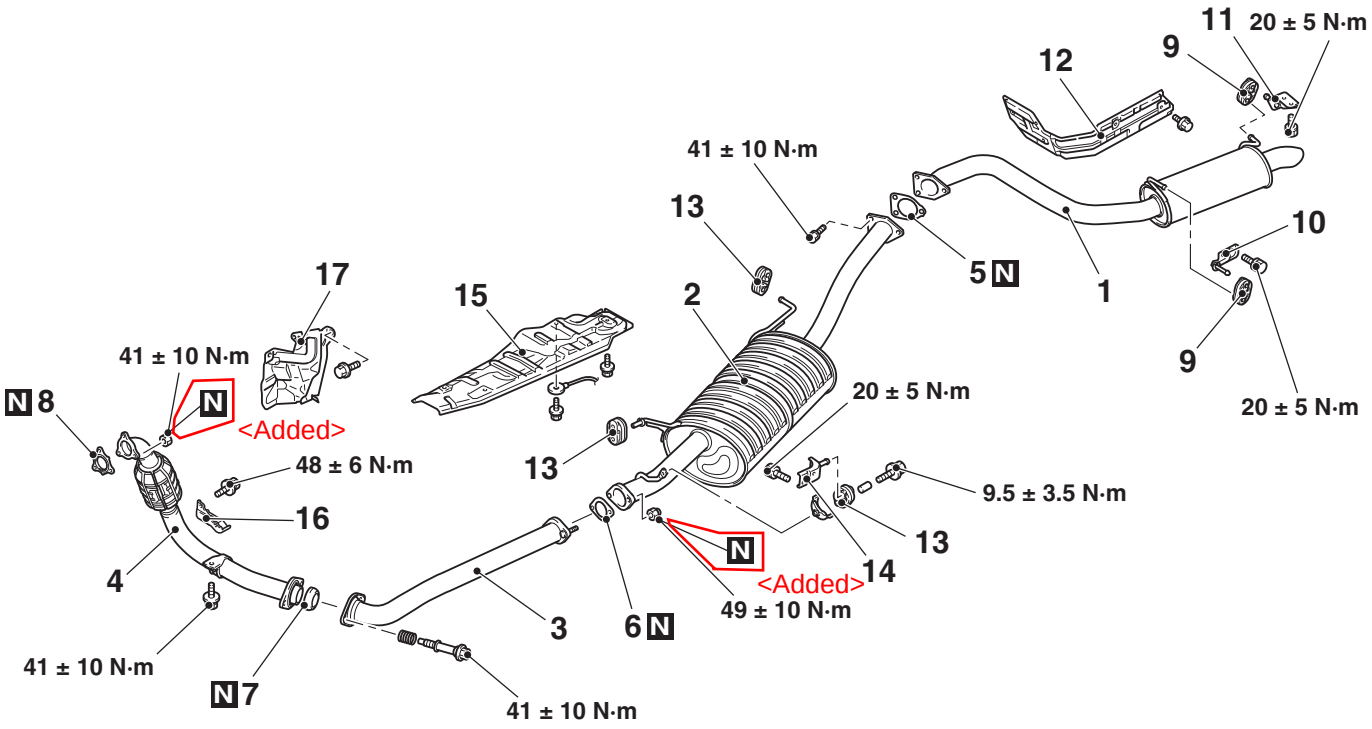

<4M41 (VEHICLES WITH DPF)>

Short wheelbase

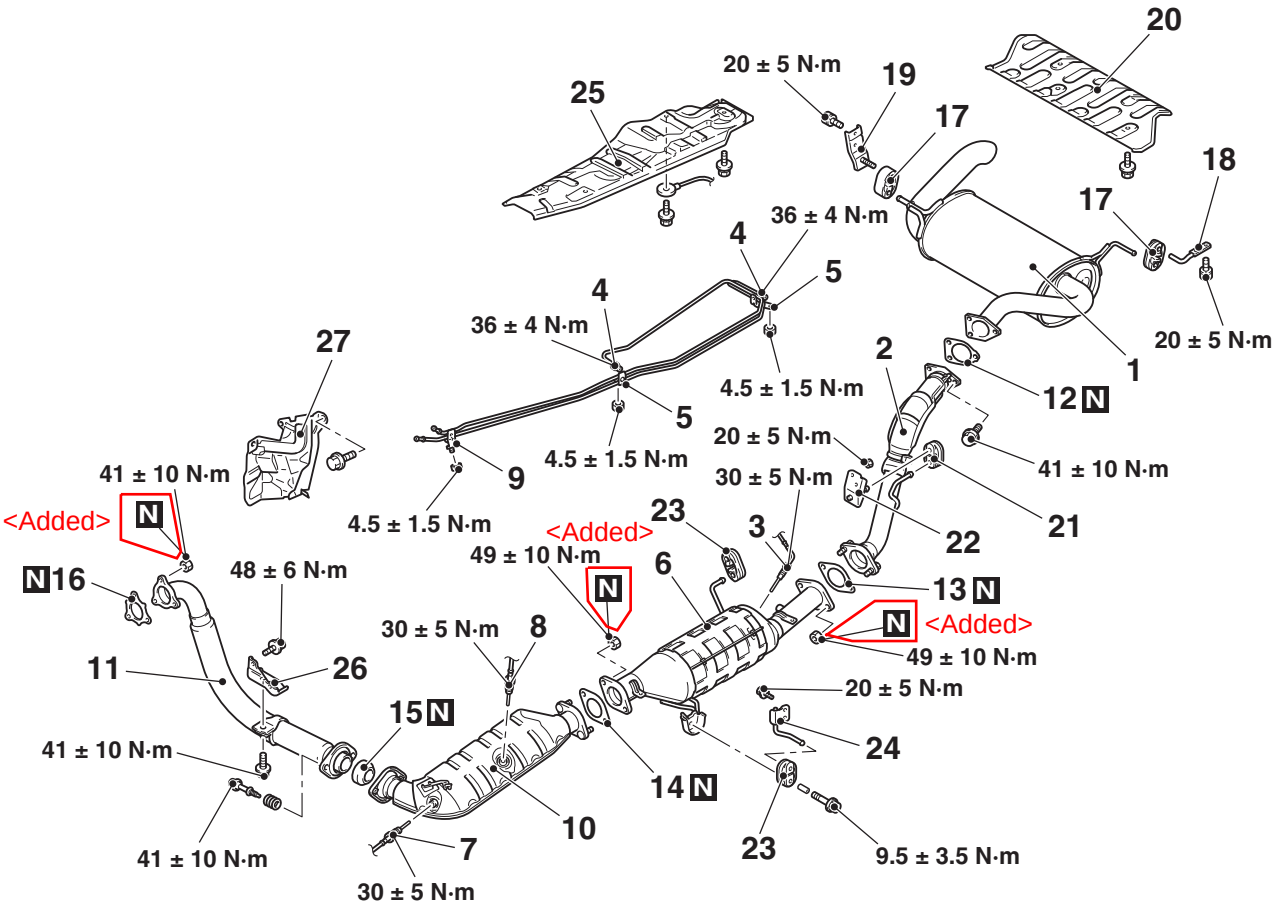

<4M41 (VEHICLES WITH DPF)>

Long wheelbase

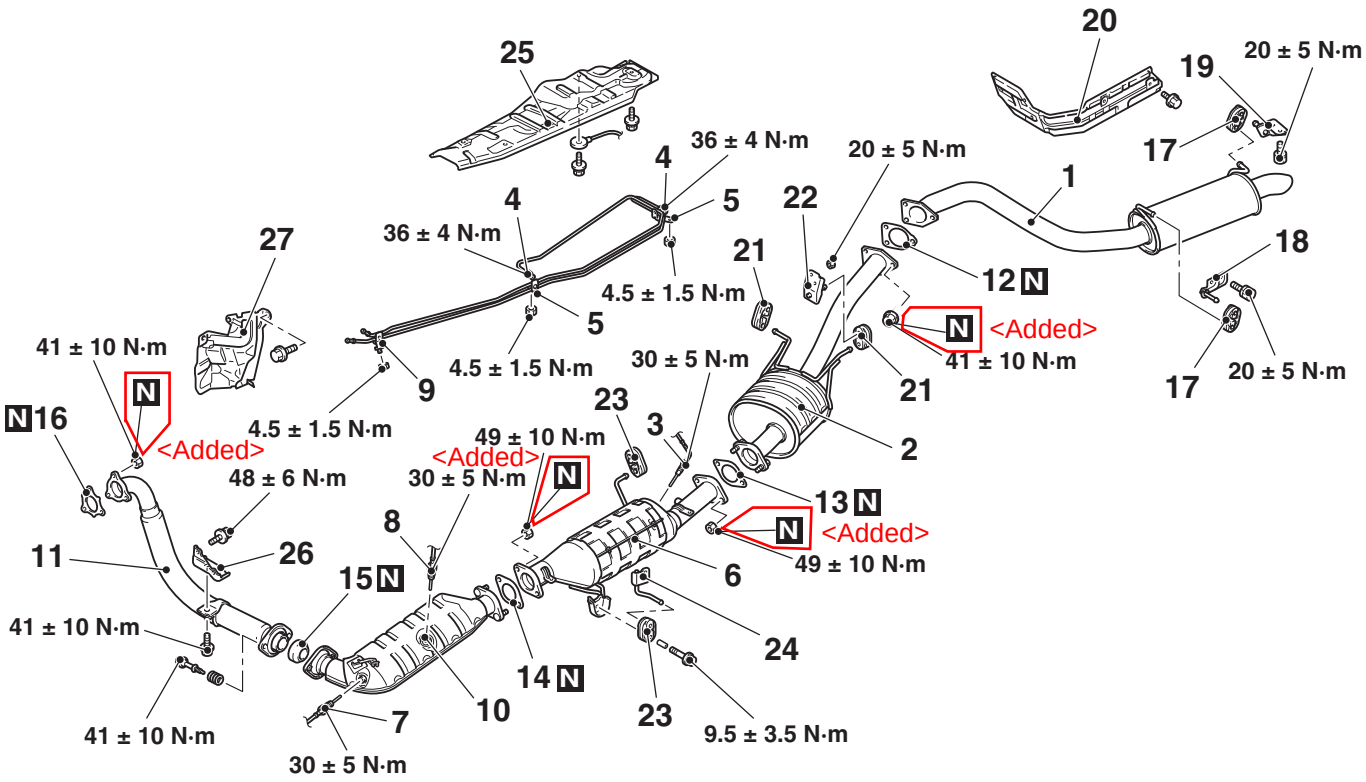

<4M40>

Short Wheelbase

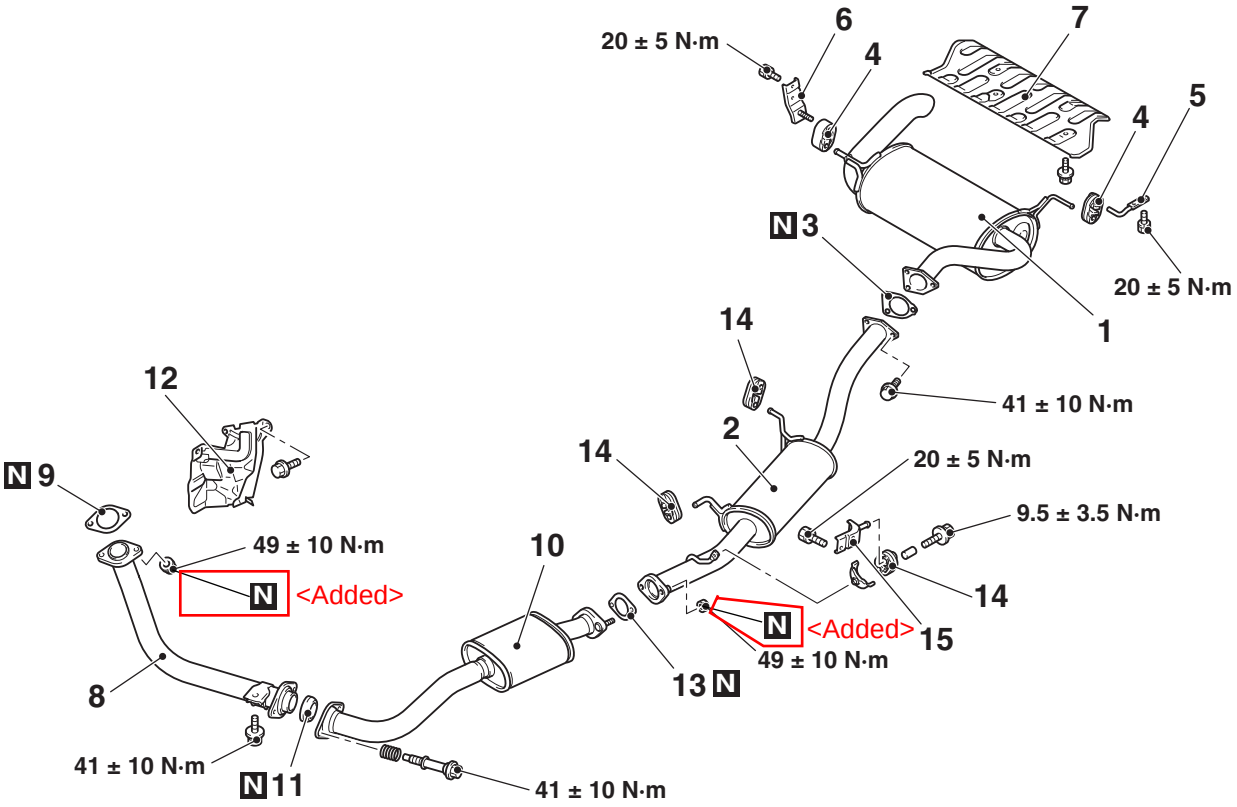

<4M40>

Long Wheelbase

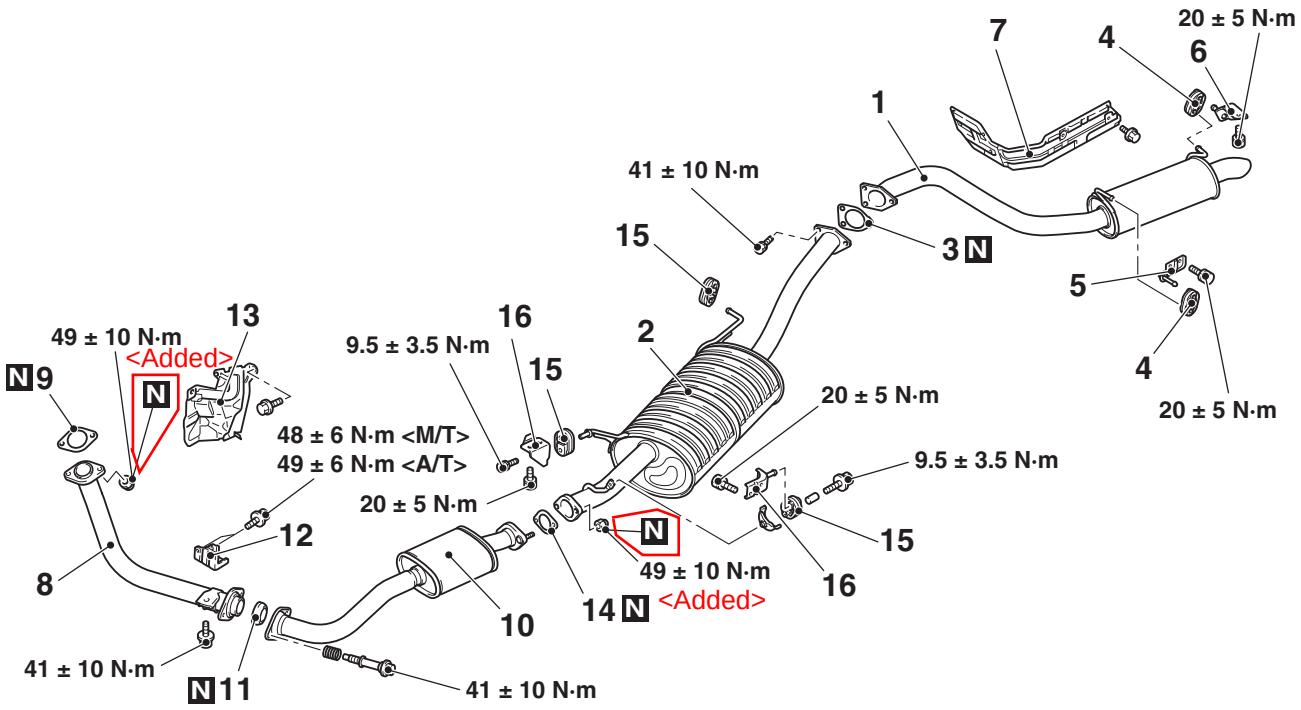

<2.0L ENGINE Non-turbo, 2.4L ENGINE>

<Except for California>

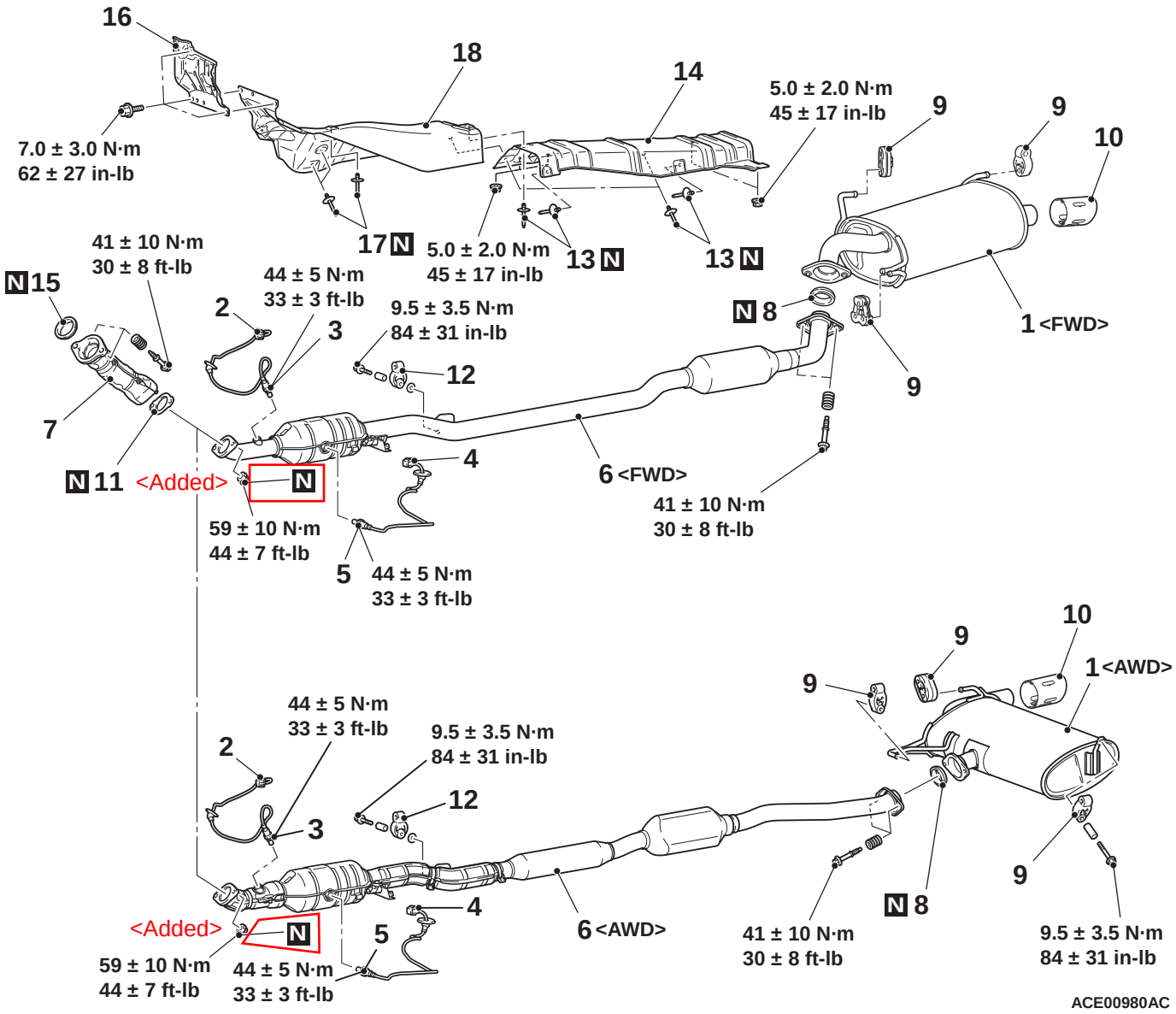

<For California>

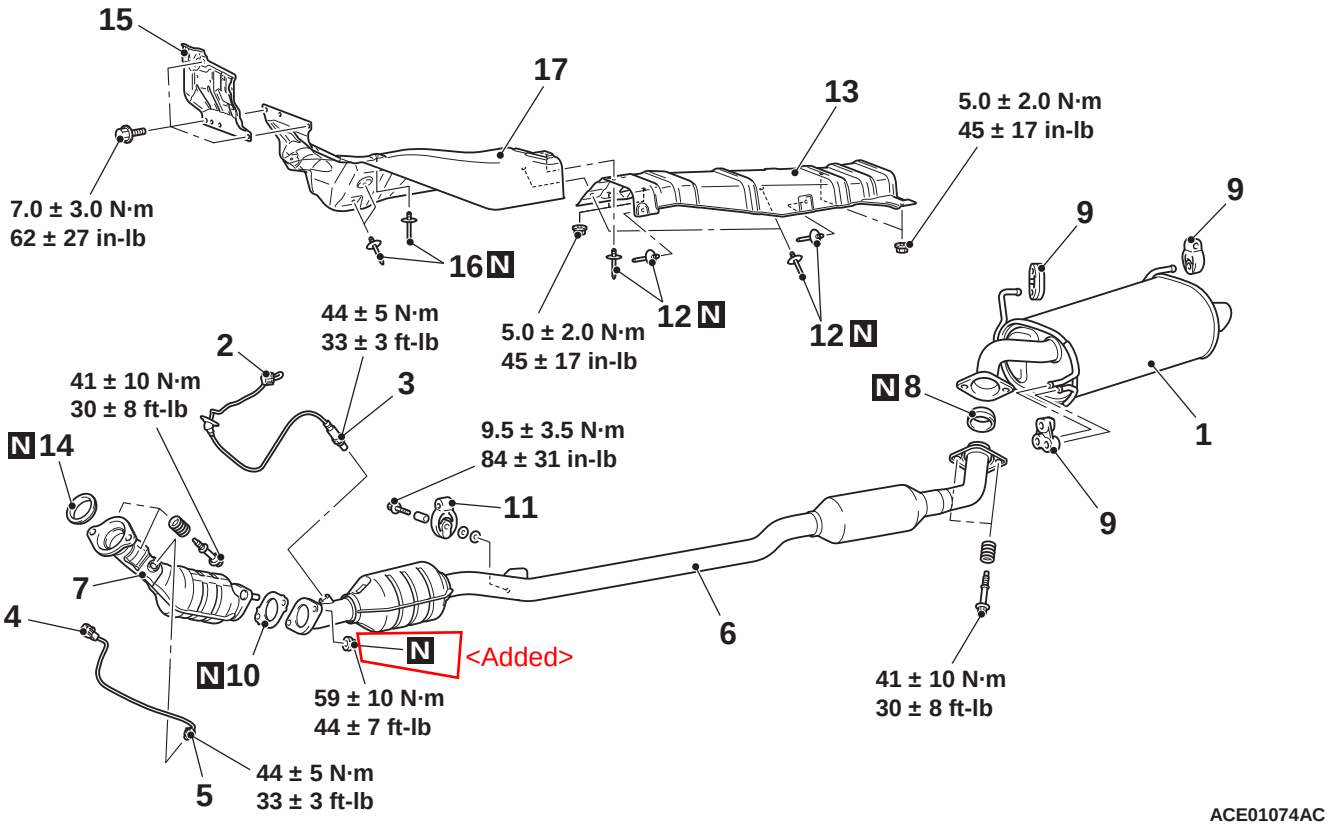

<2.0L ENGINE Turbo>

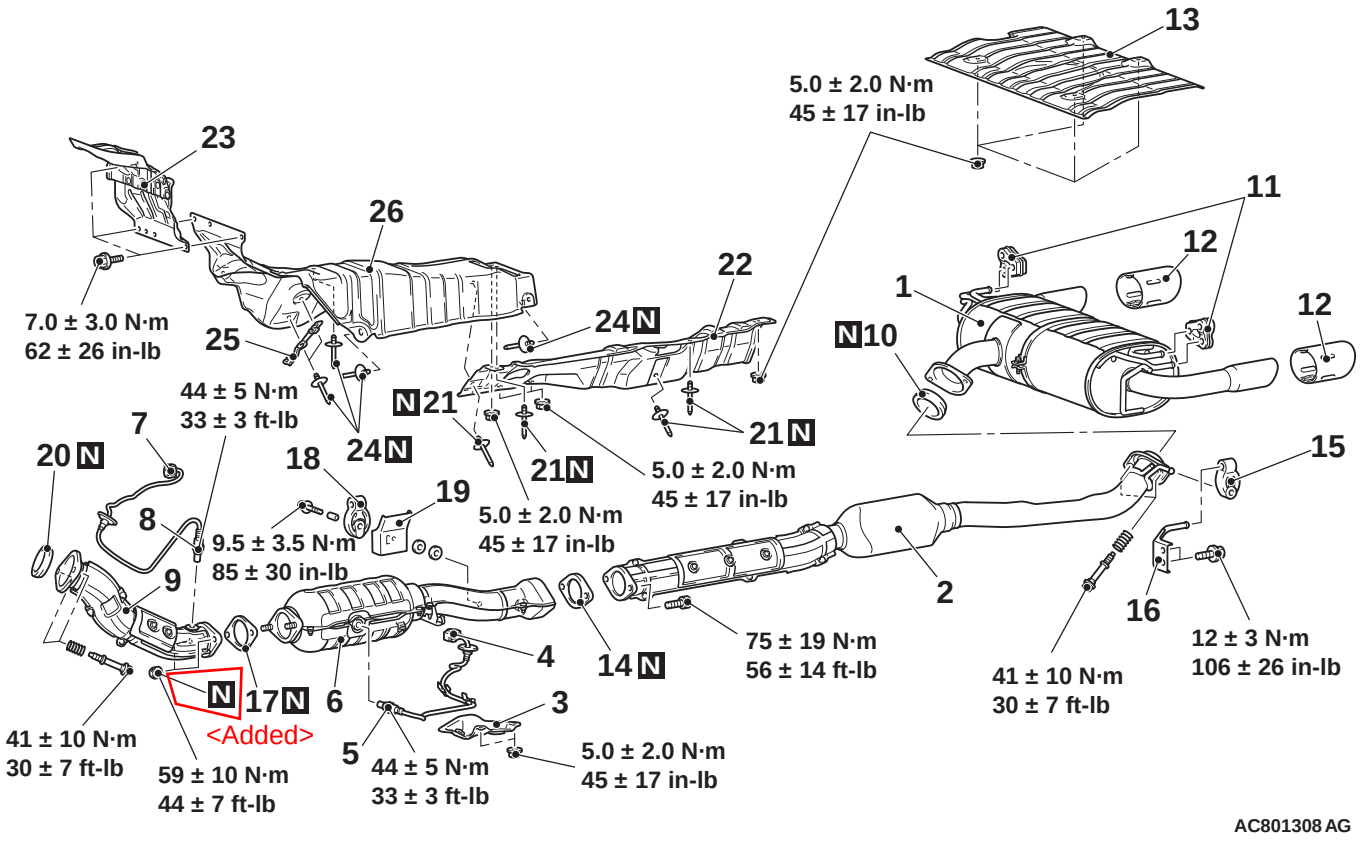

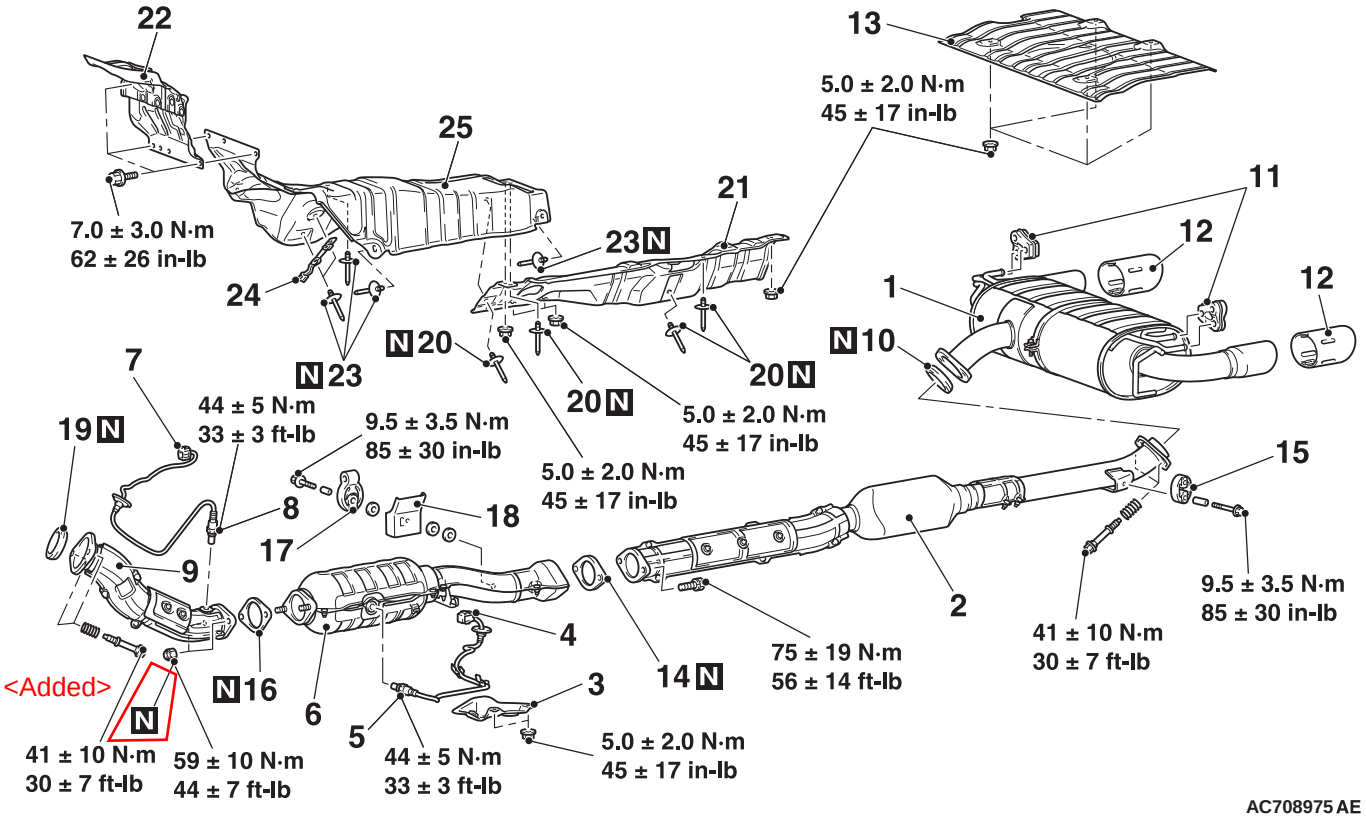
22
25
7.0 ± 3.0 N·m
62 ± 26 in-lb
24
N 23
13
5.0 ± 2.0 N·m
45 ± 17 in-lb
21
23 N
N 20
20 N
20 N
5.0 ± 2.0 N·m
45 ± 17 in-lb
5.0 ± 2.0 N·m
45 ± 17 in-lb
11
12
12
1
N 10
7
19 N
44 ± 5 N·m
33 ± 3 ft-lb
9.5 ± 3.5 N·m
85 ± 30 in-lb
8
18
17
9
15
2
9.5 ± 3.5 N·m
85 ± 30 in-lb
41 ± 10 N·m
30 ± 7 ft-lb
75 ± 19 N·m
56 ± 14 ft-lb
4
14 N
3
<Added>
N
N 16
6
5
41 ± 10 N·m
30 ± 7 ft-lb
59 ± 10 N·m
44 ± 7 ft-lb
44 ± 5 N·m
33 ± 3 ft-lb
5.0 ± 2.0 N·m
45 ± 17 in-lb
AC708975 AE

<FWD>

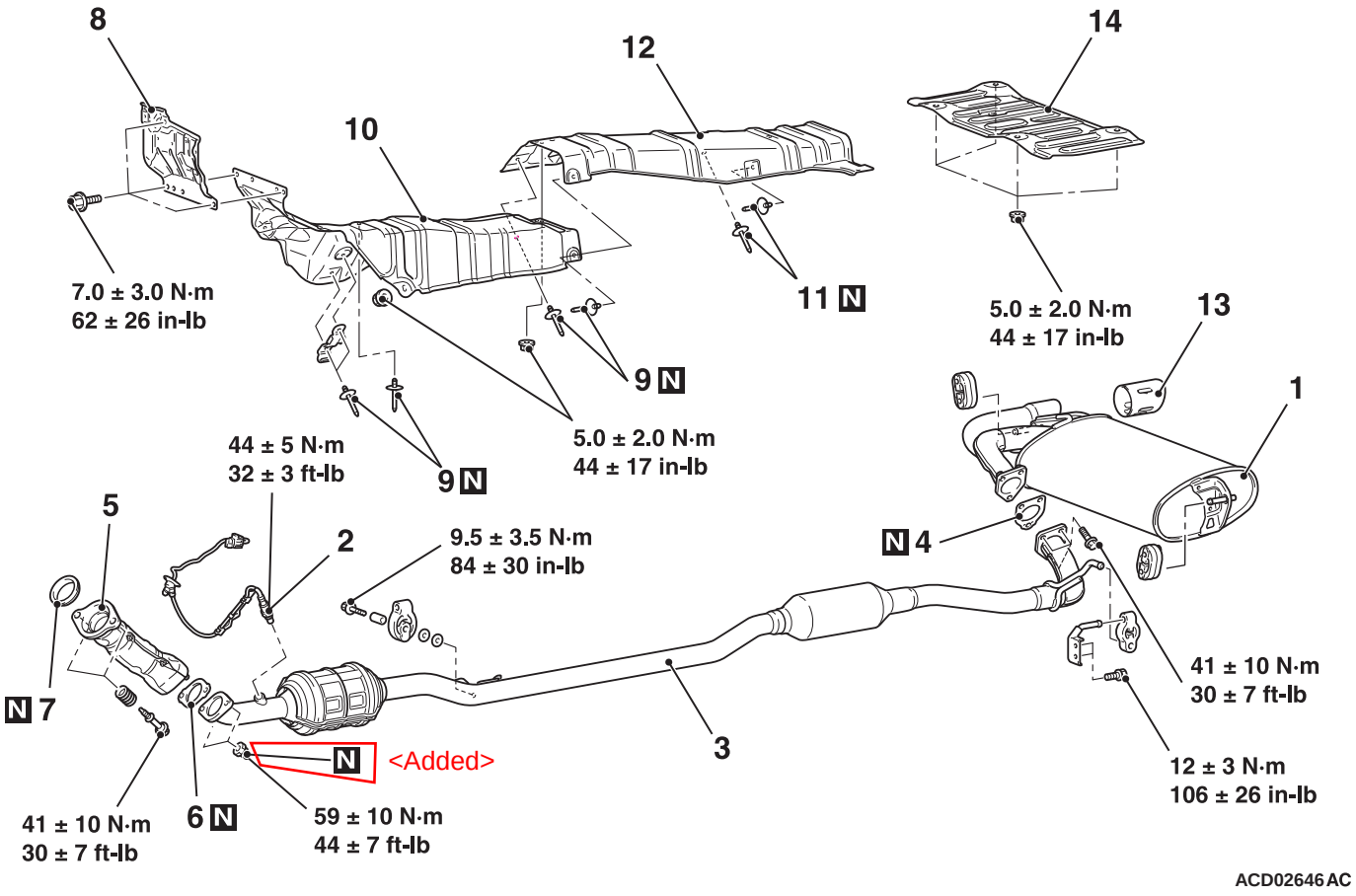

ACD02646AC

<AWD>

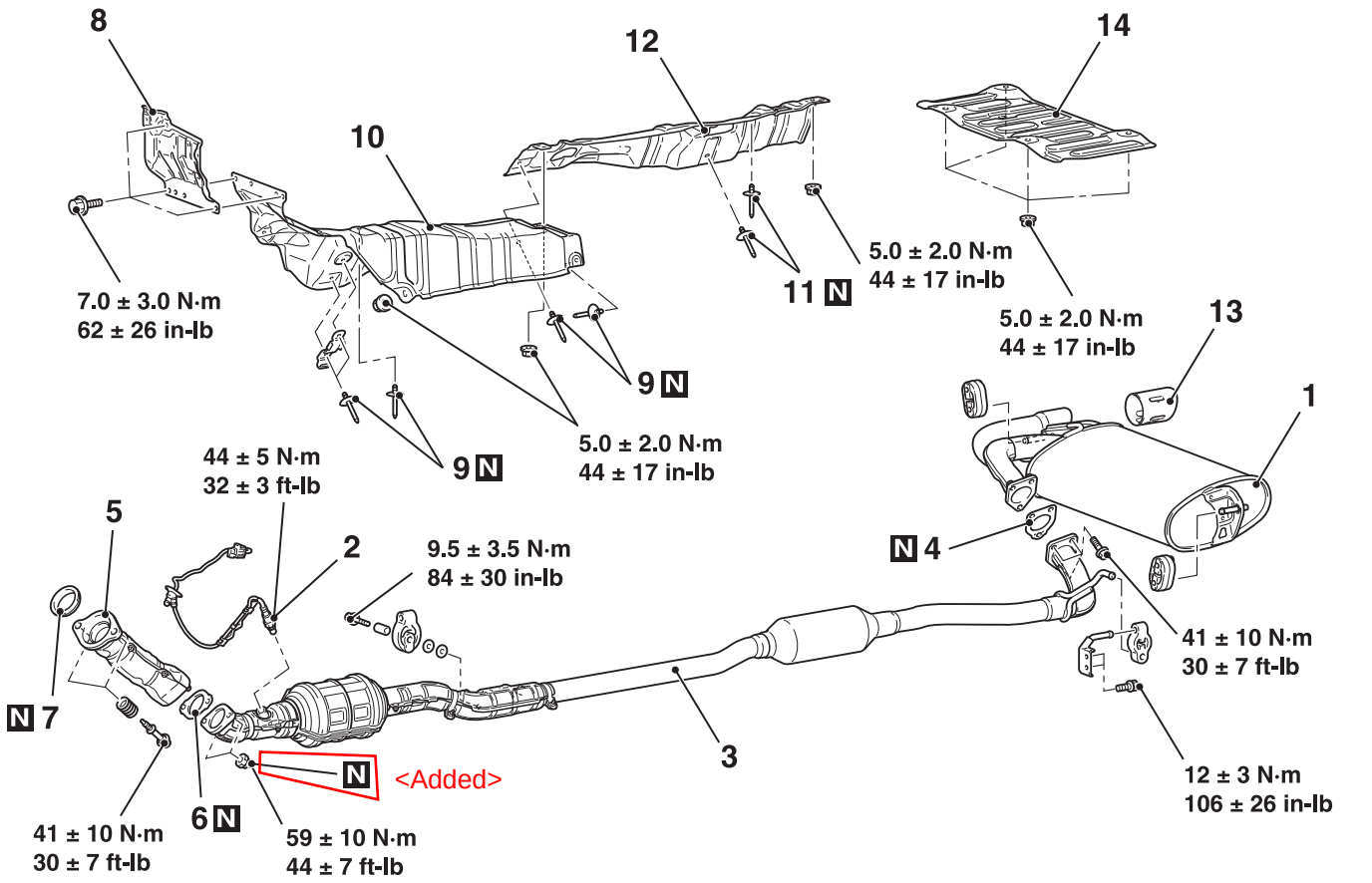

ACD02648AD

<3.0 L ENGINE>

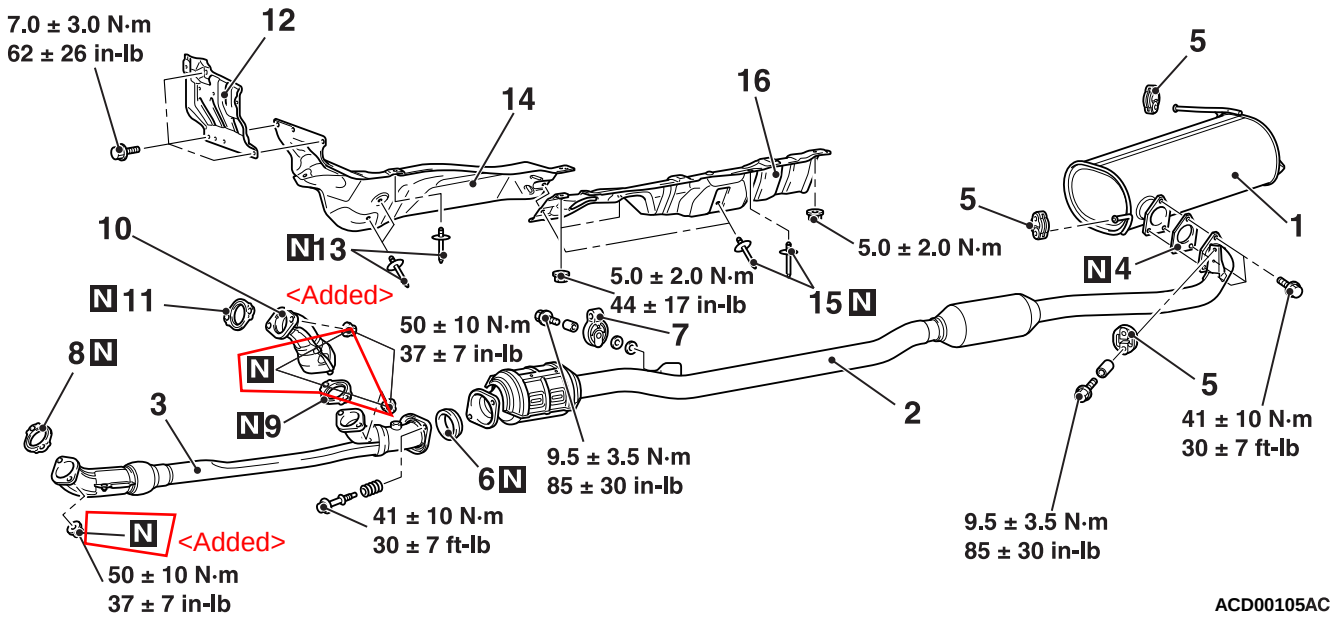
7.0 ± 3.0 N·m
62 ± 26 in-lb
12
14
16
5
5
1
10
N 13
5.0 ± 2.0 N·m
5.0 ± 2.0 N·m
44 ± 17 in-lb
15 N
N 4
N 11
<Added>
50 ± 10 N·m
37 ± 7 in-lb
7
8 N
N
3
N 9
2
5
41 ± 10 N·m
30 ± 7 ft-lb
6 N
9.5 ± 3.5 N·m
85 ± 30 in-lb
41 ± 10 N·m
30 ± 7 ft-lb
9.5 ± 3.5 N·m
85 ± 30 in-lb
N
<Added>
50 ± 10 N·m
37 ± 7 in-lb
ACD00105AC