MITSUBISHI MOTORS

SERVICE BULLETIN

GLOBAL AFTER SALES OFFICE, MITSUBISHI MOTORS CORPORATION

PURPOSE : CHANGE	ISSUE NO. : MSB-14EXML23_37-001	DATE : 2014-07-14
SUBJECT : Replacement of the converter housing of the 6A/T in the vehicles with 6B3 engine(LHD)		<DESTINATION/MODEL> (As per attached sheet 1) <M/Y> 07-12
GROUP : Automatic transmission(Gr:23)/Steering(Gr:37)		OUTLANDER(CW0W)

1. Description :

Please refer to the attached document for the information about the change of mention in the applicable service manual.(As for the vehicles with the 6B3 engine(LHD), please replace the pressure hose and return tube and also add the cooler tube clamp when you replace the converter housing of 6A/T)

2. Affected service manuals :

Please refer to the attached document (As per attached sheet 1)

3. About the details :

Please refer to the attached document (As per attached sheet 2-10)

4. Effective time : From the vehicels produced from the end of May, 2013.

※As for the vehicle produced before the end of May, 2013, please replace the pressure hose and the return tube when you replace the 6A/T assembly or the converter housing since the 6A/T assembly includes the converter housing, too.

【MMNA/MEXICO】

Applicable manual	Pub. No.	Applicable title (INFO-ID)	Contents
2007 OUTLANDER Service Manual	MSCD-007B-2007	TRANSAXLE ASSEMBLY REMOVAL AND INSTALLATION (M231-00-571-23600-01)	Attached sheet 2
		POWER STEERING HOSE REMOVAL AND INSTALLATION (M372-00-571-34801-01)	Attached sheet 3
2008 OUTLANDER Service Manual	MSCD-007B-2008	TRANSAXLE ASSEMBLY REMOVAL AND INSTALLATION (M231-00-571-41800-01)	Attached sheet 2
		POWER STEERING HOSE REMOVAL AND INSTALLATION (M372-00-571-79101-01)	Attached sheet 3
2009 OUTLANDER Service Manual	MSCD-007B-2009	TRANSAXLE ASSEMBLY REMOVAL AND INSTALLATION (M231-00-571-46300-01)	Attached sheet 2
		POWER STEERING HOSE REMOVAL AND INSTALLATION (M372-00-571-79101-01)	Attached sheet 3
2010 OUTLANDER Service Manual	MSCD-007B-2010	TRANSAXLE ASSEMBLY REMOVAL AND INSTALLATION (M231-00-571-58200-01)	Attached sheet 2
		POWER STEERING HOSE REMOVAL AND INSTALLATION (M372-00-571-79101-01)	Attached sheet 3
2011 OUTLANDER Service Manual	<MMNA> MSCD-007B-2011 <MEXICO> DRAFT	TRANSAXLE ASSEMBLY REMOVAL AND INSTALLATION (M231-00-571-62300-01)	Attached sheet 2
		POWER STEERING HOSE REMOVAL AND INSTALLATION (M372-00-571-79102-01)	Attached sheet 3
2012 OUTLANDER Service Manual	<MMNA> MSCD-007B-2012 <MEXICO> DRAFT	TRANSAXLE ASSEMBLY REMOVAL AND INSTALLATION (M231-00-571-63400-01)	Attached sheet 2
		POWER STEERING HOSE REMOVAL AND INSTALLATION (M372-00-571-79101-01)	Attached sheet 3

【EU/RUSSIA】

Applicable manual	Pub. No.	Applicable title (INFO-ID)	Contents
2007 OUTLANDER Workshop Manual	<RUSSIA> N/A CGXE07E1-CD(ENG) CGXF07E1-CD(FRE) CGXG07E1-CD(GER) CGXS07E1-CD(SPA)	TRANSMISSION ASSEMBLY REMOVAL AND INSTALLATION (M231-00-571-22500-01)	Attached sheet 4
		POWER STEERING HOSE REMOVAL AND INSTALLATION (M372-00-571-04700-01)	Attached sheet 5
2008 OUTLANDER Workshop Manual	<EU> CGXE08E2-CD(ENG) CGXF08E2-CD(FRE) CGXG08E2-CD(GER) CGXS08E2-CD(SPA) <RUSSIA> N/A	TRANSMISSION ASSEMBLY REMOVAL AND INSTALLATION (M231-00-571-29200-01)	Attached sheet 4
		POWER STEERING HOSE REMOVAL AND INSTALLATION (M372-00-571-36000-01)	Attached sheet 5
2009 OUTLANDER Workshop Manual	<EU> CGXE09E2-CD(ENG) CGXF09E2-CD(FRE) CGXG09E2-CD(GER) CGXS09E2-CD(SPA) <RUSSIA> N/A	TRANSMISSION ASSEMBLY REMOVAL AND INSTALLATION (M231-00-571-51500-01)	Attached sheet 4
		POWER STEERING HOSE REMOVAL AND INSTALLATION (M372-00-572-18100-01)	Attached sheet 6
2010 OUTLANDER Workshop Manual	<EU> CGXE10E1-CD(ENG) CGXF10E1-CD(FRE) CGXG10E1-CD(GER) CGXS10E1-CD(SPA) <RUSSIA> N/A	TRANSMISSION ASSEMBLY REMOVAL AND INSTALLATION (M231-00-571-51500-01)	Attached sheet 4
		POWER STEERING HOSE REMOVAL AND INSTALLATION (M372-00-572-18100-01)	Attached sheet 6
2011 OUTLANDER Workshop Manual	<EU> CGXE11E1-CD(ENG) CGXF11E1-CD(FRE) CGXG11E1-CD(GER) CGXS11E1-CD(SPA) <RUSSIA> N/A	TRANSMISSION ASSEMBLY REMOVAL AND INSTALLATION (M231-00-571-61200-01)	Attached sheet 4
		POWER STEERING HOSE REMOVAL AND INSTALLATION (M372-00-572-48200-01)	Attached sheet 6
2012 OUTLANDER Workshop Manual	<EU> CGXE12E1-CD(ENG) CGXF12E1-CD(FRE) CGXG12E1-CD(GER) CGXS12E1-CD(SPA) <RUSSIA> N/A	TRANSMISSION ASSEMBLY REMOVAL AND INSTALLATION (M231-00-571-64500-01)	Attached sheet 4
		POWER STEERING HOSE REMOVAL AND INSTALLATION (M372-00-572-48200-01)	Attached sheet 6

【G.EXP/GCC/CHINA/ARGENTINA/SOUTH AFRICA/MMAL/NZ】

Applicable manual	Pub. No.	Applicable title (INFO-ID)	Contents
2007 OUTLANDER Workshop Manual	<G.EXP,GCC> PWRE0607R(ENG) <MMAL> MR936083 <China, South Africa, NZ> DRAFT	TRANSMISSION ASSEMBLY REMOVAL AND INSTALLATION (M231-00-571-23600-01)	Attached sheet 4
		POWER STEERING HOSE REMOVAL AND INSTALLATION (M372-00-571-03600-01)	Attached sheet 7
2008 OUTLANDER Workshop Manual	<G.EXP,GCC> PWRE0707R(ENG) PWRS0708R(SPA) <MMAL> MR936474 <Argentina, South Africa, NZ> DRAFT	TRANSMISSION ASSEMBLY REMOVAL AND INSTALLATION (M231-00-571-30000-01)	Attached sheet 4
		POWER STEERING HOSE REMOVAL AND INSTALLATION (M372-00-571-32600-01)	Attached sheet 8
2008 OUTLANDER Workshop Manual	<China> DRAFT	TRANSMISSION ASSEMBLY REMOVAL AND INSTALLATION (M231-00-571-35500-01)	Attached sheet 4
		POWER STEERING HOSE REMOVAL AND INSTALLATION (M372-00-571-44500-01)	Attached sheet 7
2009 OUTLANDER Workshop Manual	<G.EXP,GCC> PWRE0810R(ENG) PWRS0811R(SPA) <MMAL> MR936477 <China, Argentina, South Africa, NZ> DRAFT	TRANSMISSION ASSEMBLY REMOVAL AND INSTALLATION (M231-00-571-43000-01)	Attached sheet 4
		POWER STEERING HOSE REMOVAL AND INSTALLATION (M372-00-571-74600-01)	Attached sheet 9
2010 OUTLANDER Workshop Manual	<G.EXP,GCC> PWRE0906R(ENG) PWRS0907R(SPA) <MMAL> MR936925 <China, Argentina, South Africa, NZ> DRAFT	TRANSMISSION ASSEMBLY REMOVAL AND INSTALLATION (M231-00-571-55900-01)	Attached sheet 4
		POWER STEERING HOSE REMOVAL AND INSTALLATION (M372-00-572-18100-01)	Attached sheet 10

【Taiwan(KD)】

Applicable manual	Pub. No.	Applicable title (INFO-ID)	Content
2008 OUTLANDER Workshop Manual	DRAFT	POWER STEERING HOSE REMOVAL AND INSTALLATION (M372-00-571-62700-01)	Attached sheet 9

<Added>

Attached sheet 2(2/2)

INSTALLATION SERVICE POINTS

>>A<< TRANSAXLE ASSEMBLY INSTALLATION

Fully push the torque converter into the transaxle side, and then assemble the transaxle assembly to the engine.

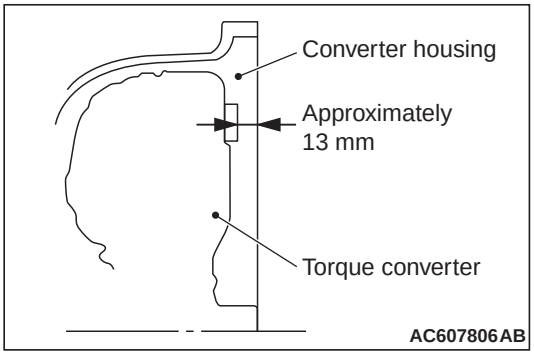

>>B<< TRANSAXLE MOUNTING INSULATOR STOPPER INSTALLATION

Install the transaxle mounting insulator stopper as shown in the figure.

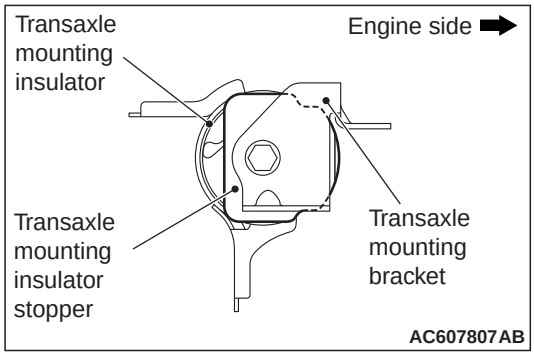

>>C<< TRANSAXLE CONTROL CABLE (TRANSAXLE SIDE) INSTALLATION

1. Move the selector lever and manual control lever to the "N" position.
2. Use the adjusting nut to tighten the transaxle control cable to the specified torque.

   Tightening torque: 9.5 ± 3.5 N·m (84 ± 31 in-lb)

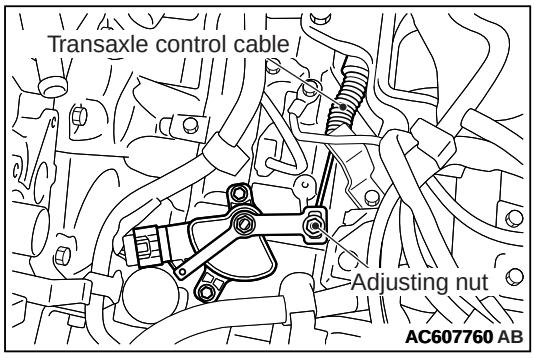

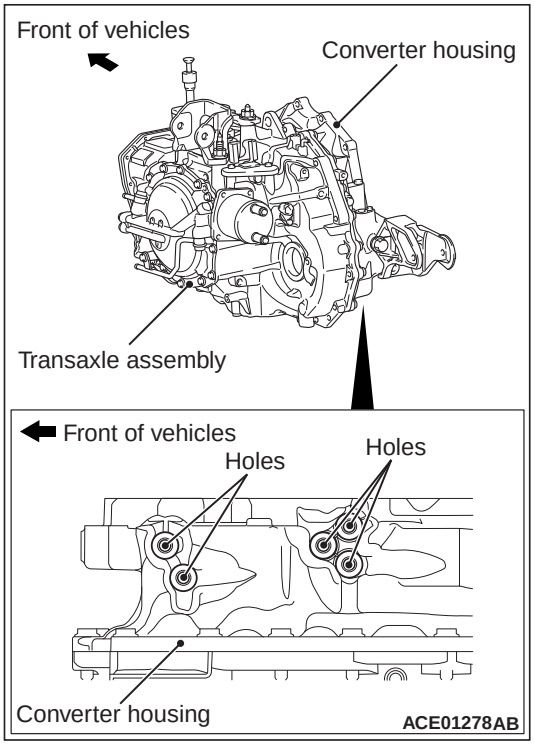

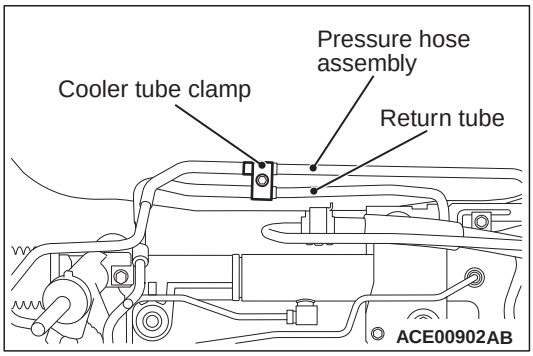

⚠ CAUTION

For the converter housing on which there are holes, check whether a cooler tube clamp secures the pressure hose and the return hose of the power steering. If not, replace them with replacement hydraulic lines. (Refer to GROUP 37 - Power Steering Removal and Installation .)

Attached sheet 3(1/3)

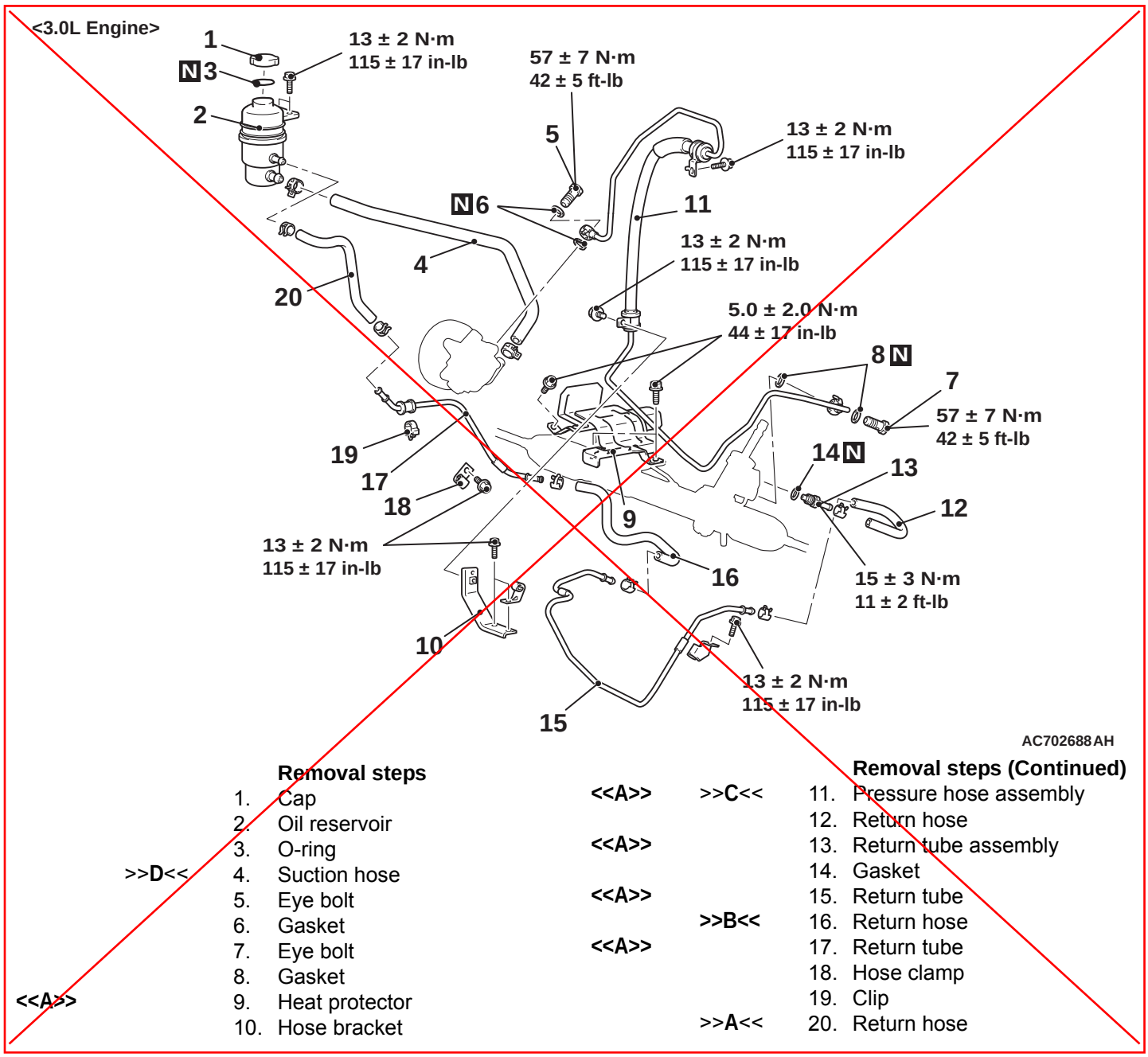

	Removal steps			Removal steps (Continued)
	1. Cap	<<A>>	>>C<<	11. Pressure hose assembly
	2. Oil reservoir			12. Return hose
	3. O-ring	<<A>>		13. Return tube assembly
>>D<<	4. Suction hose			14. Gasket
	5. Eye bolt	<<A>>		15. Return tube
	6. Gasket		>>B<<	16. Return hose
	7. Eye bolt	<<A>>		17. Return tube
	8. Gasket			18. Hose clamp
<<A>>	9. Heat protector			19. Clip
	10. Hose bracket		>>A<<	20. Return hose

<Changed> Attached sheet 3(2/3)

<3.0L Engine>

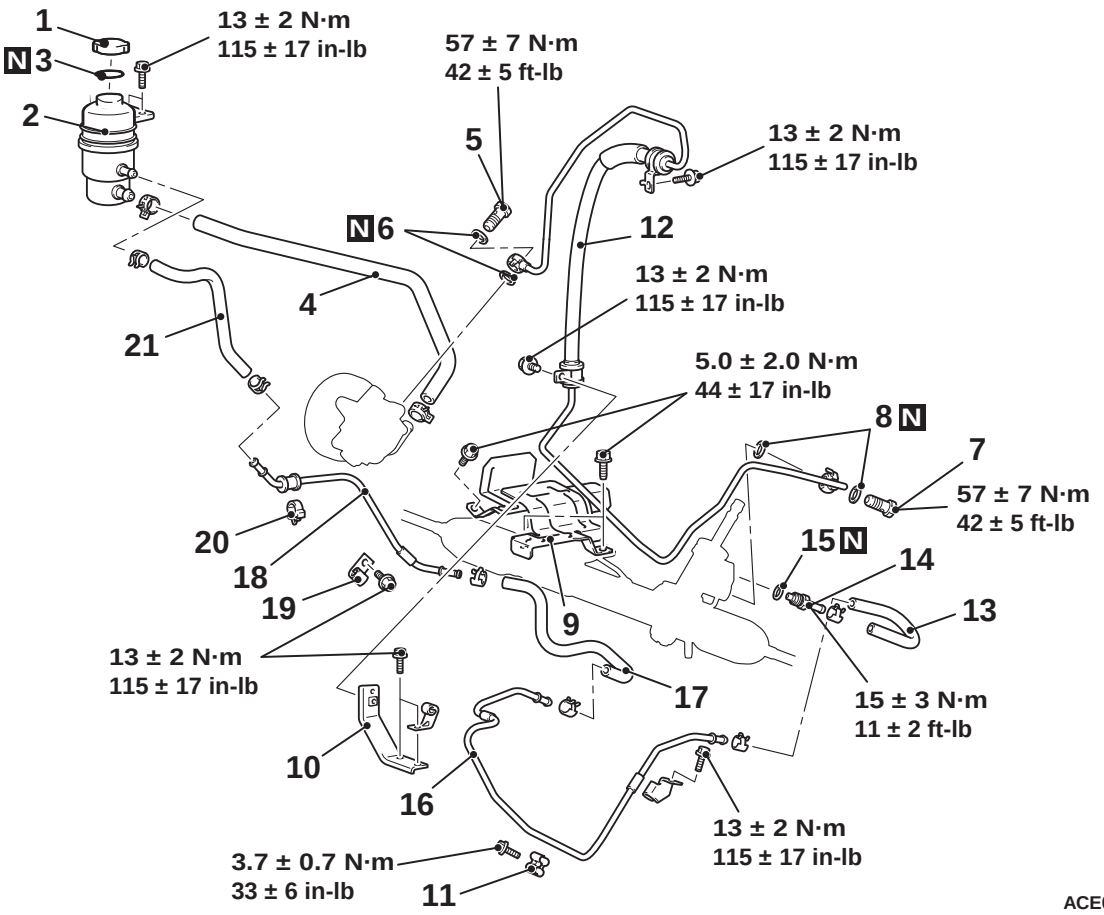

ACE01284AB

		Removal steps
	1.	Cap
	2.	Oil reservoir
	3.	O-ring
>>E<<	4.	Suction hose
	5.	Eye bolt
	6.	Gasket
	7.	Eye bolt
	8.	Gasket
<<A>>	9.	Heat protector
>>C<<	10.	Hose bracket
>>D<<	11.	Cooler tube clamp <Vehicles with cooler tube clamp>

		Removal steps
<<A>> >>C<<	12.	Pressure hose assembly
>>B<<	13.	Return hose
<<A>>	14.	Return tube assembly
	15.	Gasket
<<A>>	16.	Return tube
>>B<<	17.	Return hose
<<A>>	18.	Return tube
	19.	Hose clamp
	20.	Clip
>>A<<	21.	Return hose

<Added>

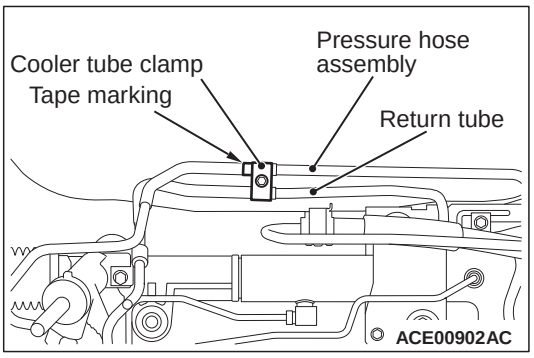

>>D<< COOLER TUBE CLAMP INSTALLATION <VEHICLES WITH COOLER TUBE CLAMP>

The end of the tape marking on the pressure hose assembly must abut on the end of the cooler tube clamp.

<Changed> E

>>D<< SUCTION HOSE INSTALLATION

1. Align the oil reservoir side suction hose marking within the area shown in the figure and connect the suction hose.

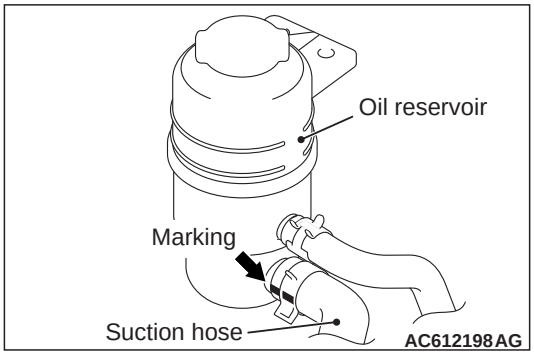

2. Align the oil pump side suction hose marking within the area shown in the figure and connect the suction hose.

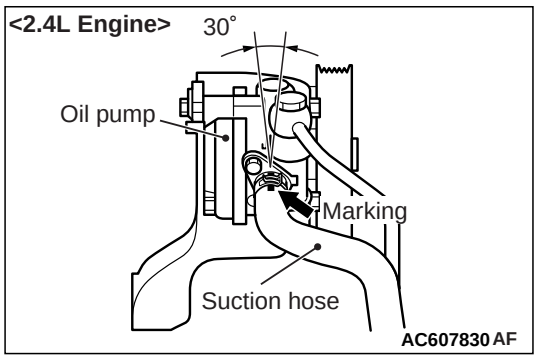

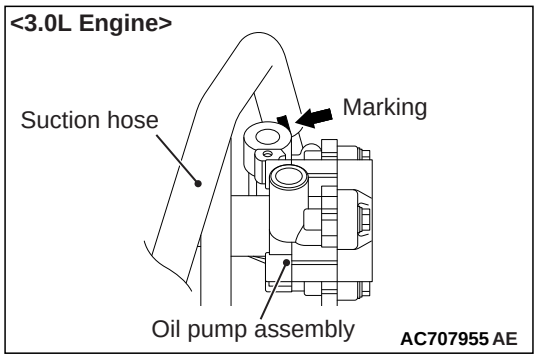

Attached sheet 4 (1/2)

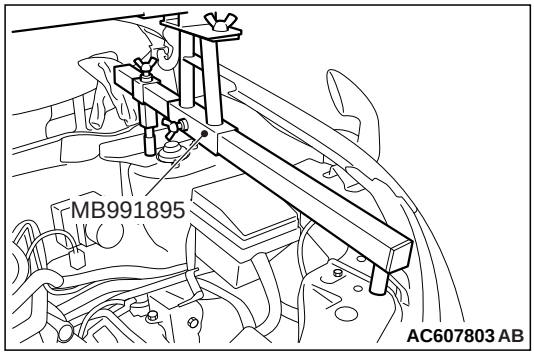

(1) Set the foot of the engine mechanical hanger (Special tool: MZ203830 or MZ203831) as shown in the figure.

NOTE: Slide the front foot of the engine mechanical hanger (Special tool: MZ203830 or MZ203831) to balance the engine hanger.

⚠ CAUTION

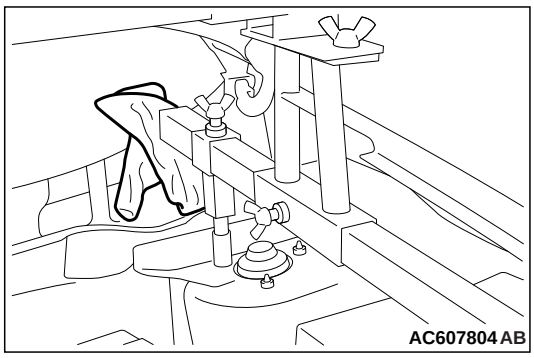

Place rag between the engine mechanical hanger (Special tool: MZ203830 or MZ203831) and the windshield to prevent the special tool from interfering with the windshield.

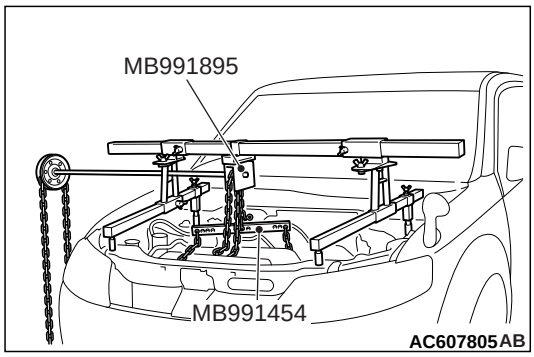

<Added>
Attached sheet 4 (2/2)

(2) Set the chains of the engine hanger (Special tool: MB991527) and the engine hanger balancer (Special tool: MB991454) to support the engine and transmission assembly. Remove the garage jack and then remove the transmission assembly upper part coupling bolts that have been loosened previously.

INSTALLATION SERVICE POINTS

>>A<< TRANSMISSION ASSEMBLY INSTALLATION

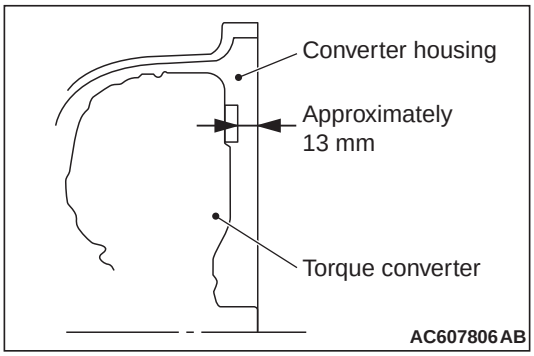

Fully push the torque converter into the transmission side, and then assemble the transmission assembly to the engine.

>>B<< TRANSMISSION MOUNTING INSULATOR STOPPER INSTALLATION

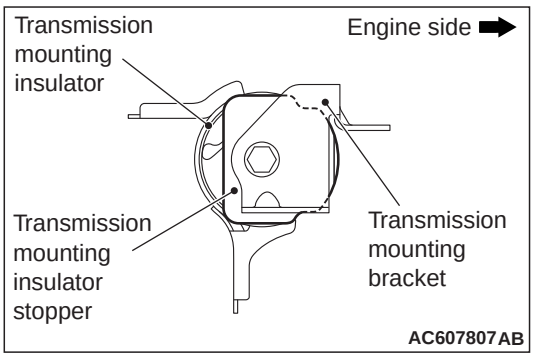

Install the transmission mounting insulator stopper as shown in the figure.

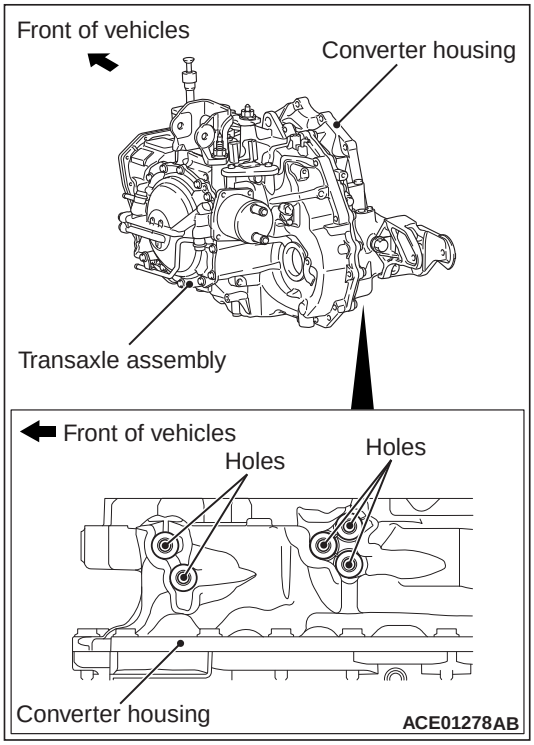

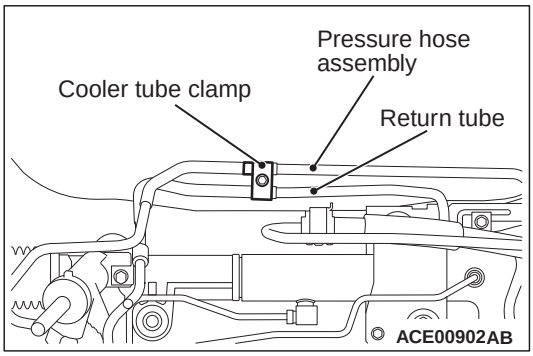

⚠ CAUTION

For the converter housing on which there are holes, check whether a cooler tube clamp secures the pressure hose and the return hose of the power steering. If not, replace them with replacement hydraulic lines. (Refer to GROUP 37 - Power Steering Removal and Installation .)

<Changed>
Attached sheet 5 (2/2) A

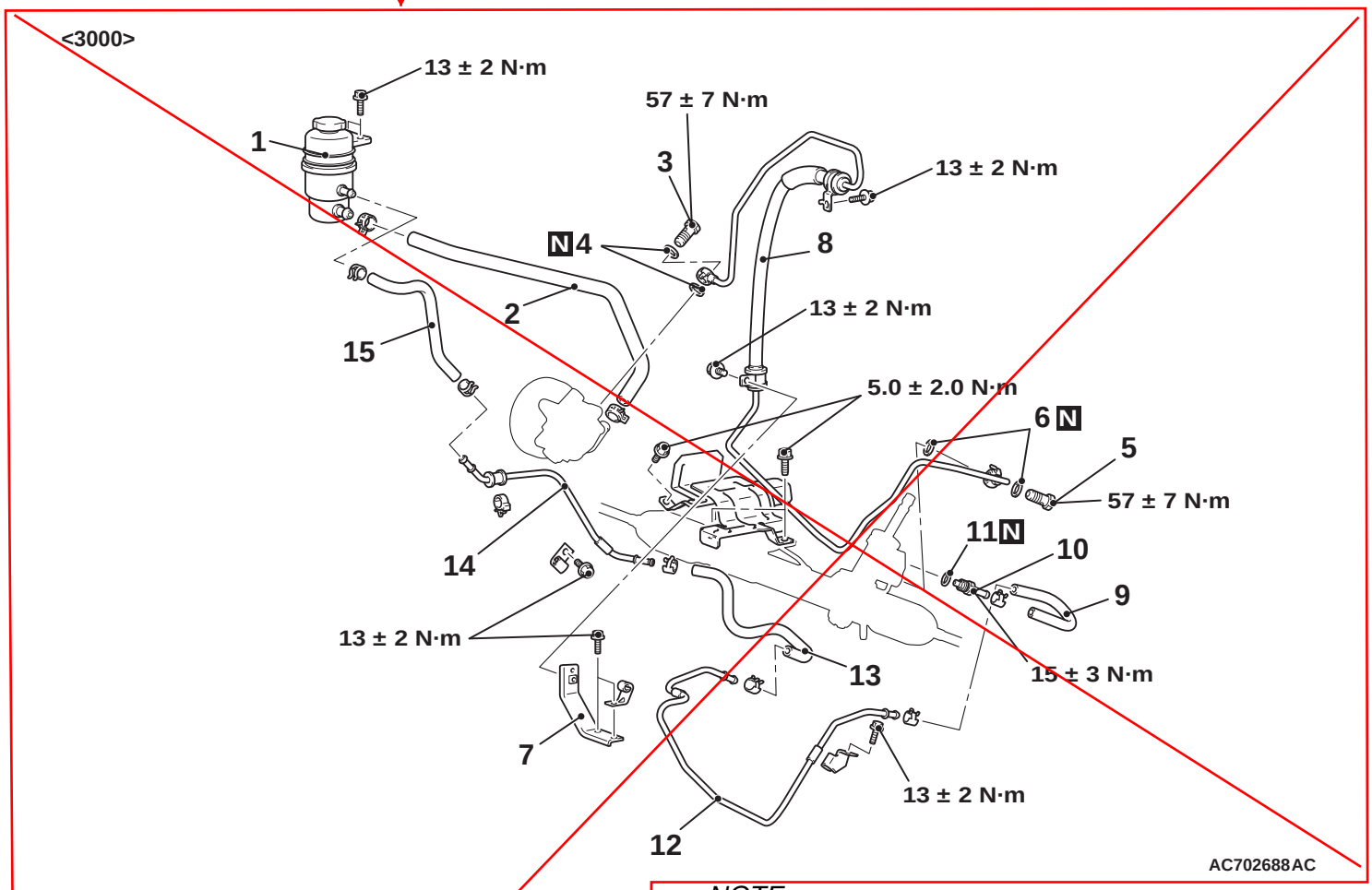

Removal steps

1. Oil reservoir
2. Suction hose
3. Eye bolt
4. Gasket
5. Eye bolt
6. Gasket

<<A>> • Heat protector

<<A>> 7. Pressure hose assembly
8. Return hose

<<A>> 9. Return tube assembly
10. Gasket

>>A<< 11. Return hose

<<A>> >>A<< 12. Return tube
13. Hose bracket
14. Return hose

<<A>> 15. Return tube

REMOVAL SERVICE POINT

<<A>> PRESSURE HOSE ASSEMBLY, RETURN TUBE ASSEMBLY REMOVAL

Remove the heat protector, and push the engine assembly and transmission assembly toward the front of the vehicle to widen the clearance. Then, remove the pressure hose assembly and the return tube assembly.

NOTE:
When pushing the engine assembly and transmission assembly, check that the propeller shaft assembly, front exhaust pipe, front roll stopper, and centre member assembly are already removed.

INSTALLATION SERVICE POINTS

>>A<< PRESSURE HOSE ASSEMBLY, RETURN TUBE ASSEMBLY INSTALLATION

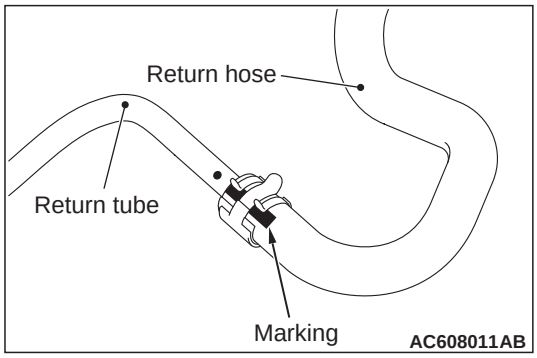

Align the pressure hose plate as shown in the figure and connect pressure hose.

<Added>
Attached sheet 5 (2/2)B

A

<3000>

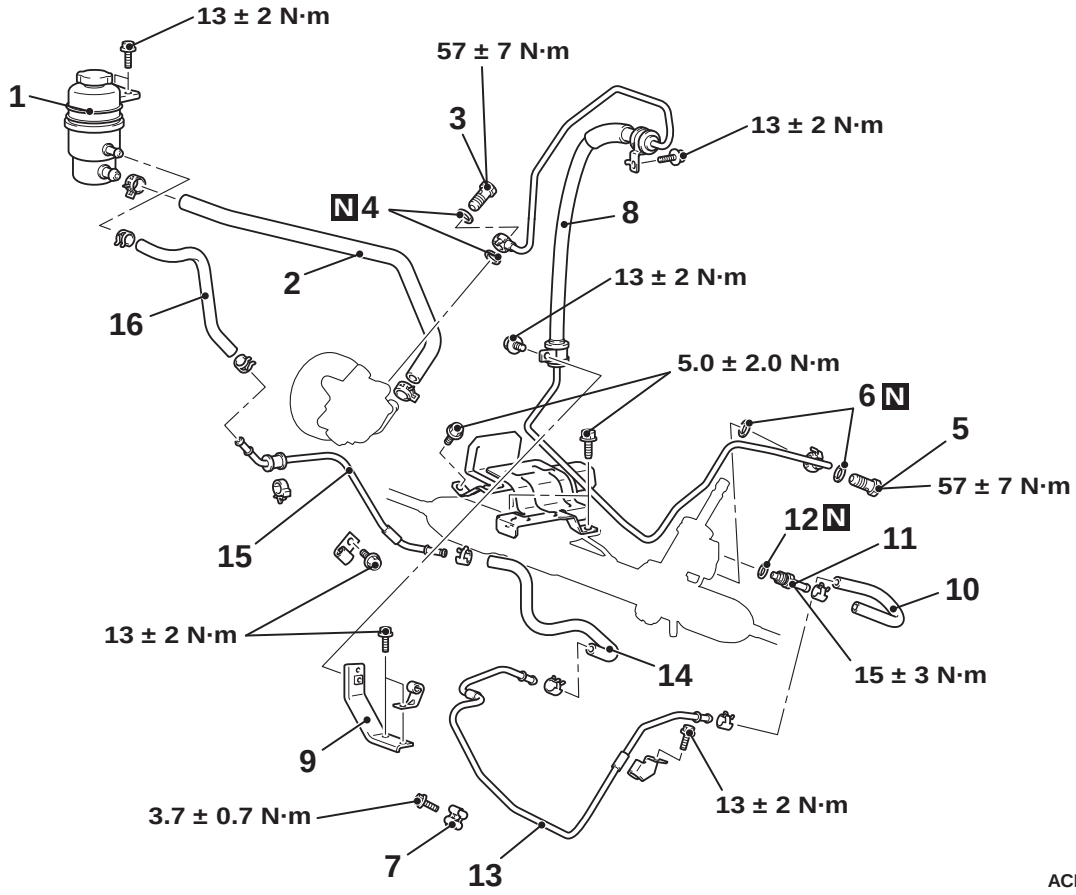

		Removal steps			Removal steps
		1. Oil reservoir			8. Pressure hose assembly
		2. Suction hose	<<A>>		9. Hose bracket
		3. Eye bolt		>>A<<	10. Return hose
		4. Gasket	<<A>>		11. Return tube assembly
		5. Eye bolt			12. Gasket
		6. Gasket	<<A>>	>>A<<	13. Return tube
<<A>>		• Heat protector			14. Return hose
	>>B<<	7. Cooler tube clamp <Vehicles with cooler tube clamp>	<<A>>		15. Return tube
					16. Return hose

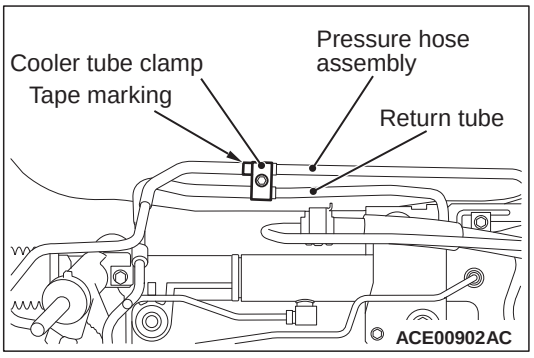

>>B<< COOLER TUBE CLAMP INSTALLATION <VEHICLES WITH COOLER TUBE CLAMP>

The end of the tape marking on the pressure hose assembly must abut on the end of the cooler tube clamp.

B

<Changed>

Attached sheet 6 (3/3) A

Pre-removal Operation	Post-installation Operation
• Power Steering Fluid Draining, Refilling, Bleeding (Refer to P.37-12).	• Power Steering Fluid Draining, Refilling, Bleeding (Refer to P.37-12).

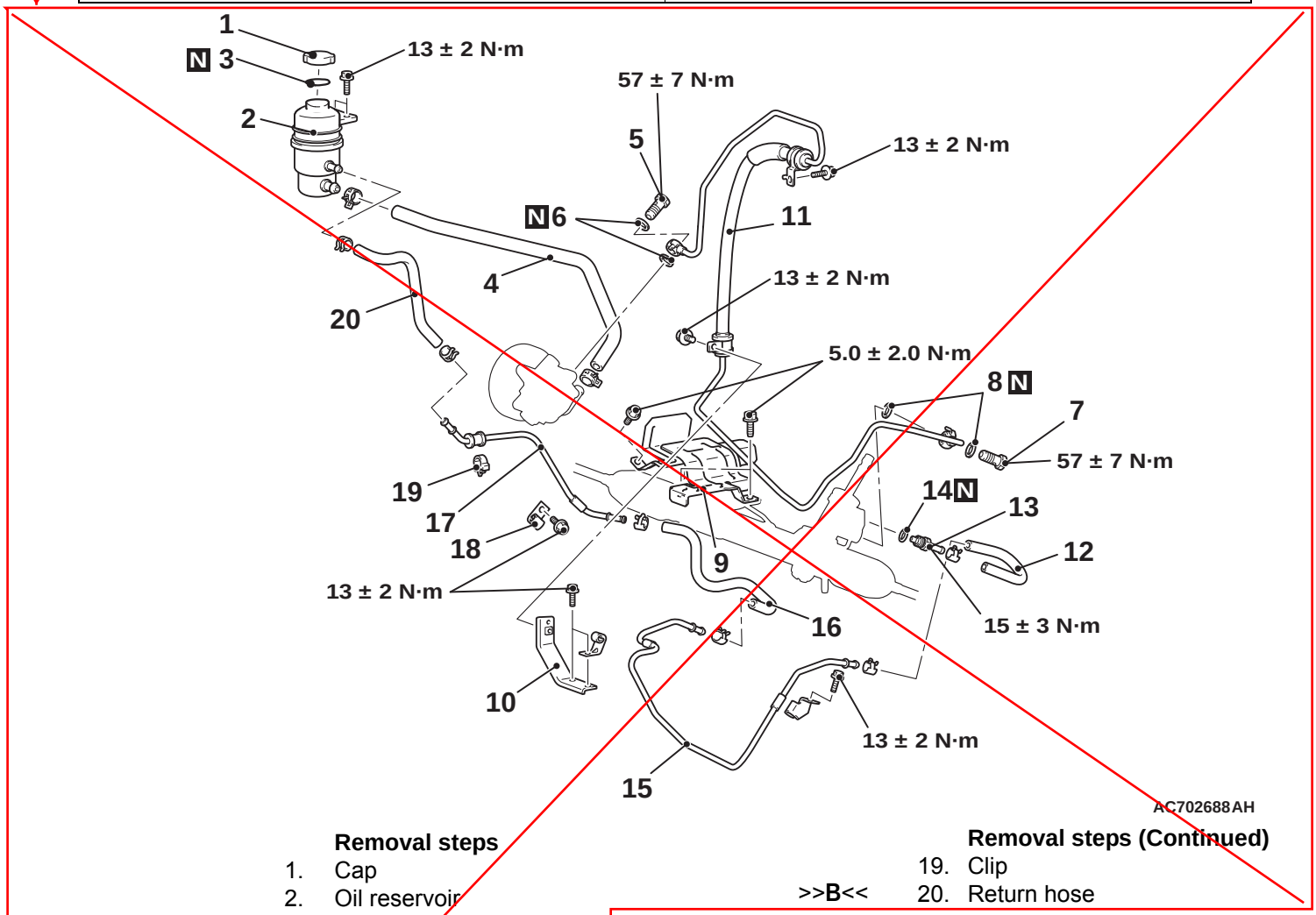

Removal steps

	1.	Cap
	2.	Oil reservoir
	3.	O-ring
>>D<<	4.	Suction hose
	5.	Eye bolt
	6.	Gasket
	7.	Eye bolt
	8.	Gasket
<<A>>	9.	Heat protector
	10.	Hose bracket
<<A>> >>C<<	11.	Pressure hose assembly
>>B<<	12.	Return hose
<<A>>	13.	Return tube assembly
	14.	O-ring
<<A>>	15.	Return tube
>>A<<	16.	Return hose
<<A>>	17.	Return tube
	18.	Hose clamp

Removal steps (Continued)

	19.	Clip
>>B<<	20.	Return hose

REMOVAL SERVICE POINT

<<A>> HEAT PROTECTOR/ PRESSURE HOSE ASSEMBLY/ RETURN TUBE ASSEMBLY/ RETURN TUBE REMOVAL

Remove the heat protector, and push the engine assembly and transmission assembly toward the front of the vehicle to widen the clearance. Then, remove the pressure hose assembly and the return tube assembly.

NOTE:
When pushing the engine assembly and transmission assembly, check that the propeller shaft assembly, front exhaust pipe, front roll stopper, and centre member assembly are already removed.

<Added>
Attached sheet 6 (3/3) B

INSTALLATION SERVICE POINTS

>>A<< RETURN HOSE INSTALLATION

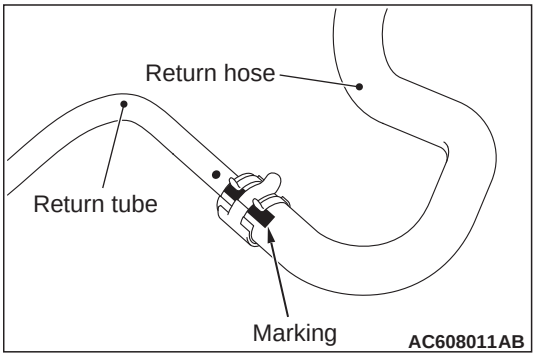

Align the making as shown in the figure and connect return hose.

>>B<< RETURN HOSE/ CLIP/ HOSE CLAMP INSTALLATION

C

<Changed>

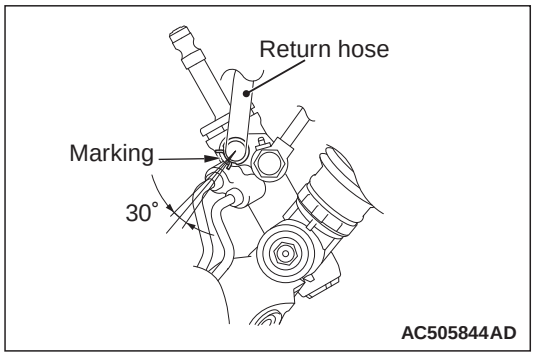

1. Align the marking as shown in the figure and connect the return hose.

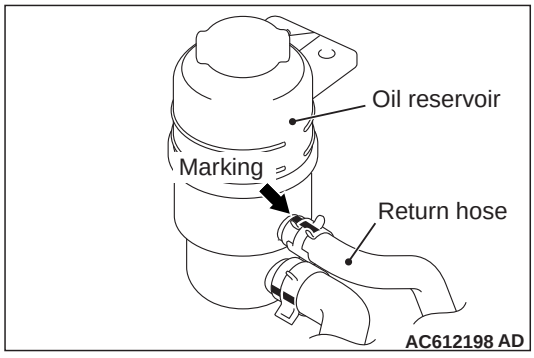

2. Align the return hose marking within the area shown in the figure and connect the return hose.

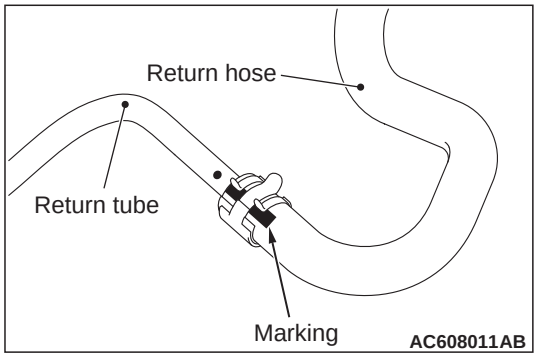

3. Align the making as shown in the figure and connect return hose.

<Changed>

>>C<< PRESSURE HOSE ASSEMBLY INSTALLATION

D

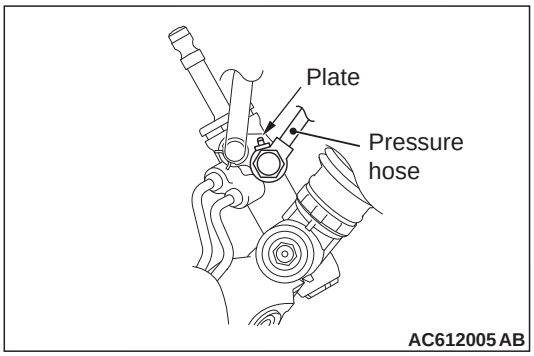

Align the pressure hose plate as shown in the figure and connect pressure hose assembly.

<Changed>

>>D<< SUCTION HOSE INSTALLATION

E

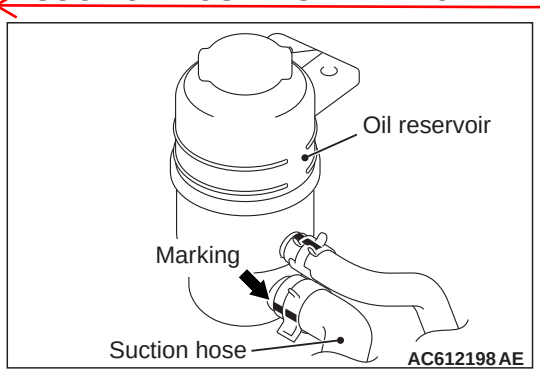

1. Align the oil reservoir side suction hose marking within the area shown in the figure and connect the suction hose.

A

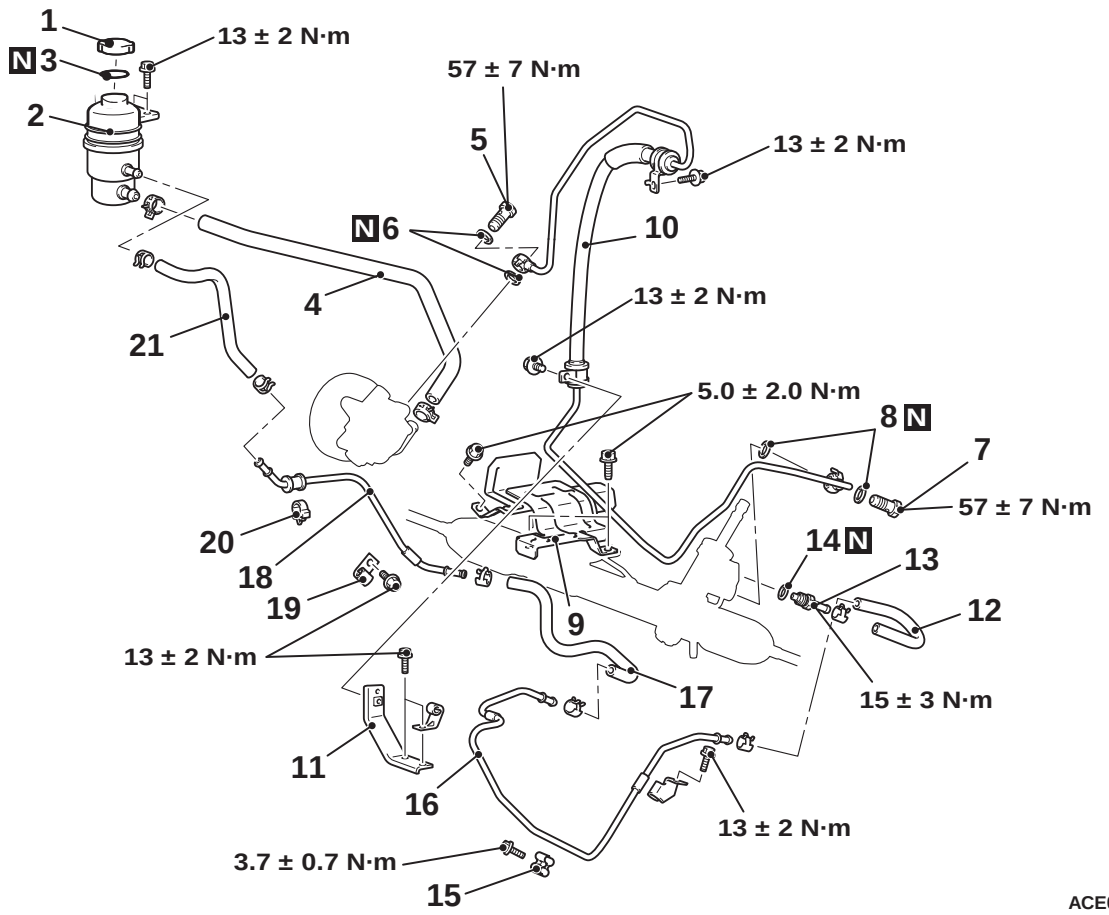

		Removal steps
		1. Cap
		2. Oil reservoir
		3. O-ring
	>>E<<	4. Suction hose
		5. Eye bolt
		6. Gasket
		7. Eye bolt
		8. Gasket
<<A>>		9. Heat protector
<<A>>	>>D<<	10. Pressure hose assembly
		11. Hose bracket
<<A>>		12. Return hose
		13. Return tube assembly
		14. Gasket
	>>C<<	15. Cooler tube clamp <Vehicles with cooler tube clamp>
<<A>>		16. Return tube
	>>B<<	17. Return hose
<<A>>		18. Return tube
		19. Hose clamp
		20. Clip
	>>A<<	21. Return hose

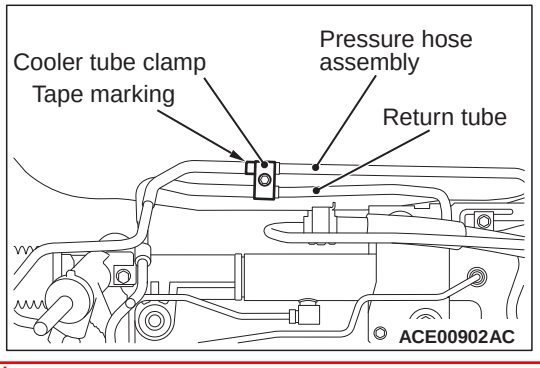

>>C<< COOLER TUBE CLAMP INSTALLATION <VEHICLES WITH COOLER TUBE CLAMP>

The end of the tape marking on the pressure hose assembly must abut on the end of the cooler tube clamp.

B

<Changed>

Attached sheet 7 (4/5)

<3000 (LH drive vehicles)>

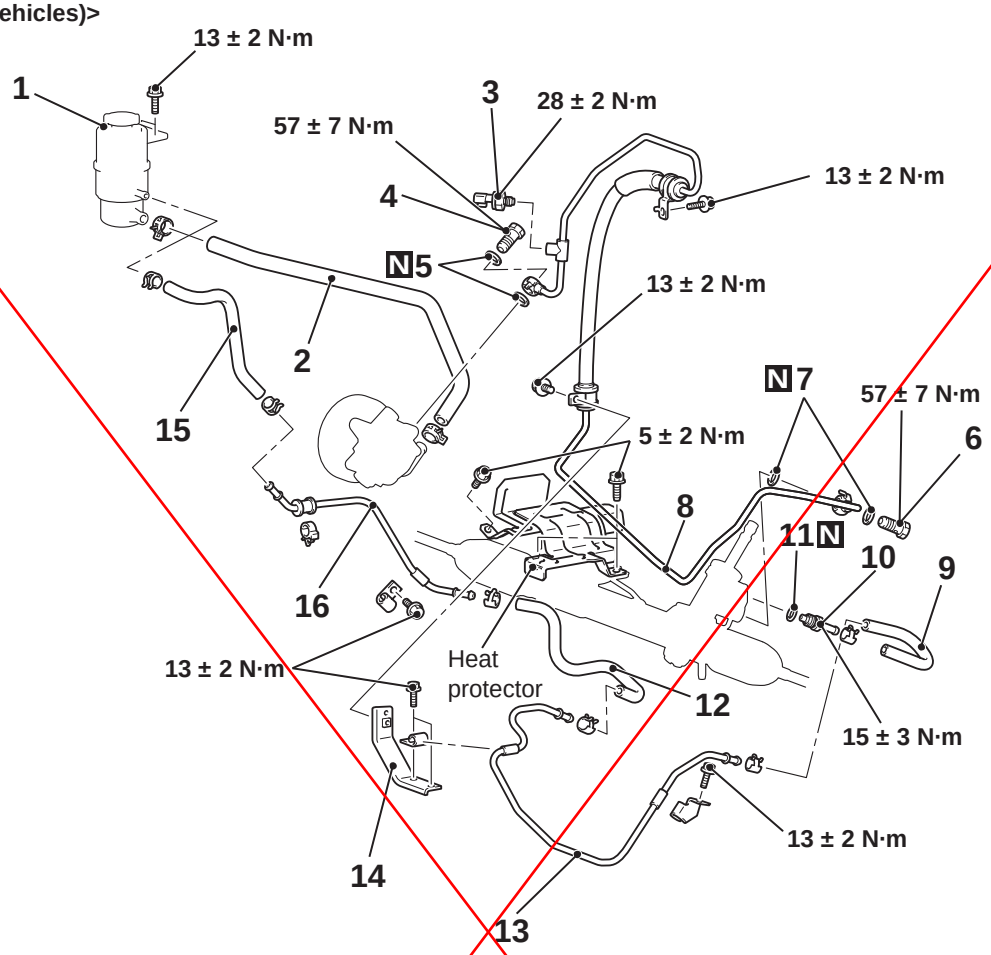

AC608010AC

<3000 (RH drive vehicles)>

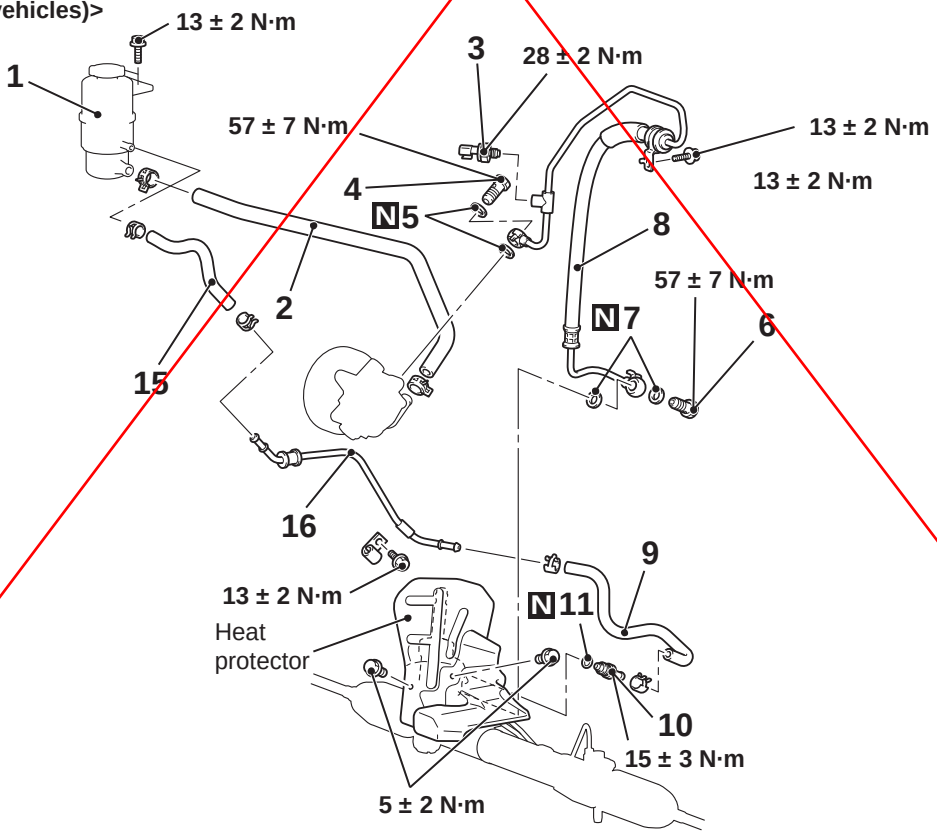

AC607895AB

<Changed>
Attached sheet 7 (5/5) A

		Removal steps
		1. Oil reservoir
		2. Suction hose
		3. Oil pressure switch
		4. Eye bolt
		5. Gasket
		6. Eye bolt
		7. Gasket
<<A>>		• Heat protector
<<A>>		8. Pressure hose assembly
		9. Return hose
<<A>>		10. Return tube assembly
		11. Gasket
	>>A<<	12. Return hose
<<A>>	>>A<<	13. Return tube
		14. Hose bracket
		15. Return hose
<<A>>		16. Return tube

REMOVAL SERVICE POINT

<<A>> PRESSURE HOSE ASSEMBLY, RETURN TUBE ASSEMBLY REMOVAL

Remove the heat protector, and push the engine assembly and transmission assembly toward the front of the vehicle to widen the clearance. Then, remove the pressure hose assembly and the return tube assembly.

NOTE:
When pushing the engine assembly and transazle assembly, check that the propeller shaft assembly, front exhaust pipe, front roll stopper, and centre member assembly are already removed.

INSTALLATION SERVICE POINTS

>>A<< PRESSURE HOSE ASSEMBLY, RETURN TUBE ASSEMBLY INSTALLATION

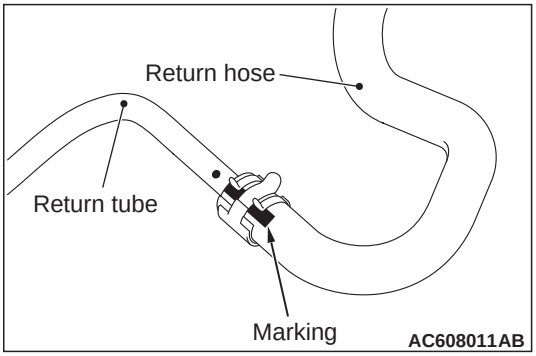

Align the pressure hose plate as shown in the figure and connect pressure hose.

>>B<< PRESSURE HOSE INSTALLATION

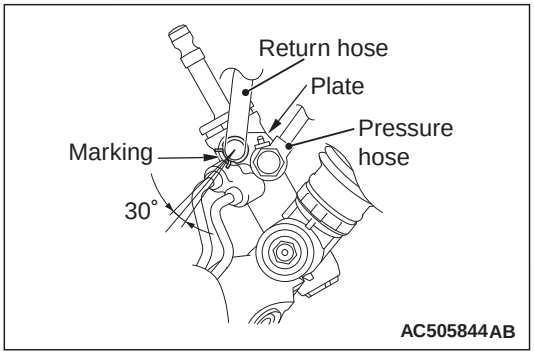

Align the pressure hose plate as shown in the figure and connect pressure hose.

>>C<< RETURN HOSE INSTALLATION

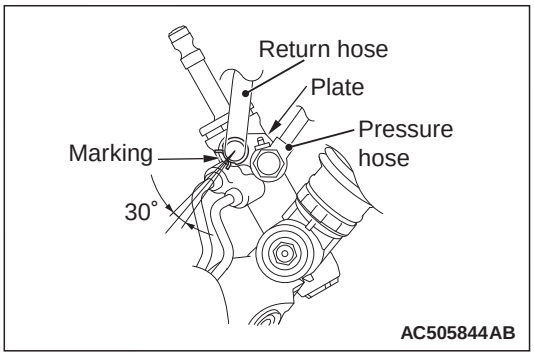

1. Align the marking (white) as shown in the figure and connect the return hose.

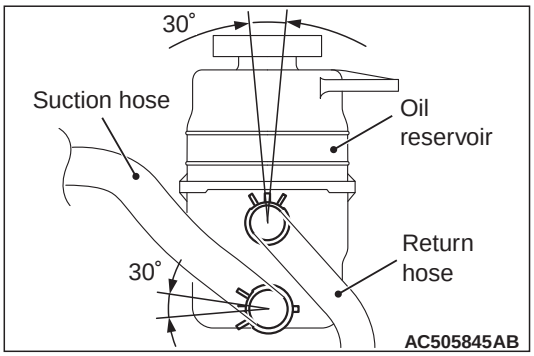

2. Align the return hose marking (green) within the area shown in the figure and connect the return hose.

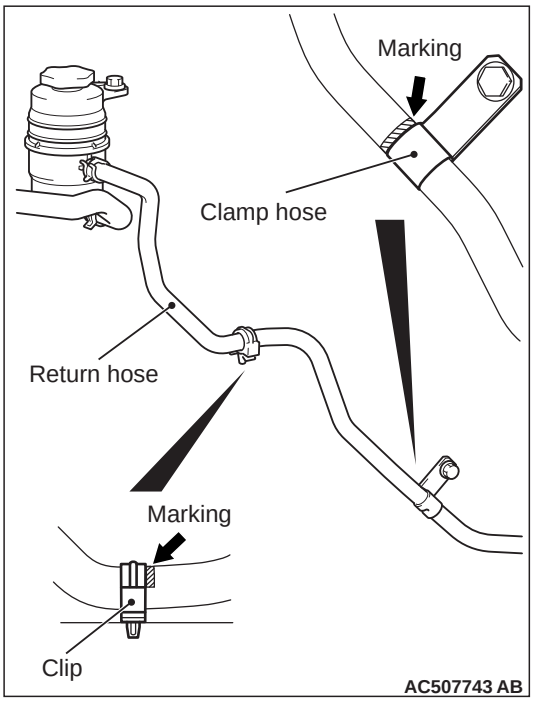

3. Using clip and hose clamp align the return hose marking (yellow) within the area shown in the figure and connect the return hose.

>>D<< SUCTION HOSE INSTALLATION

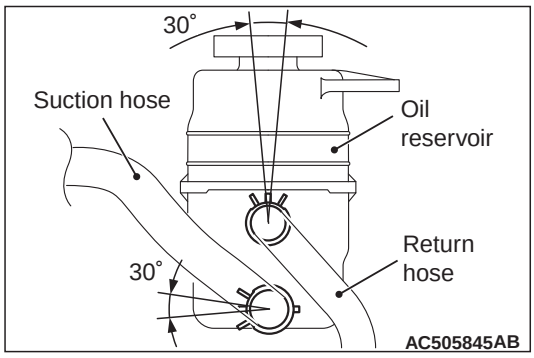

1. Align the oil reservoir side suction hose marking (white) within the area shown in the figure and connect the suction hose.

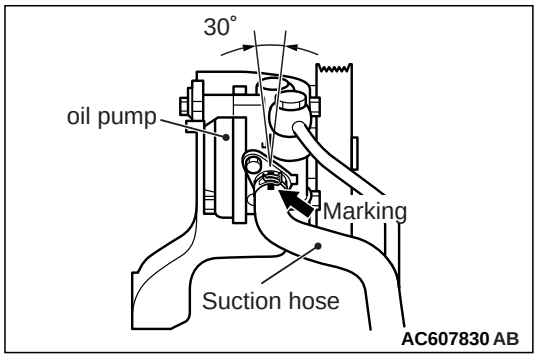

2. Align the oil pump side suction hose marking (green) within the area shown in the figure and connect the suction hose.

INSPECTION

M1372011000765

POWER STEERING OIL PRESSURE SENSOR CHECK

Refer to GROUP 13A – Troubleshooting <2400>,
Refer to GROUP 13B – Troubleshooting <3000>.

NOTE: The engine CVT–ECU <CVT> and A/T–ECU <A/T> diagnoses the power steering oil pressure sensor and sets the diagnosis code if any malfunction occurs.
<Added>

Attached sheet 7 (5/5) B

<3000 (LH drive vehicles)>

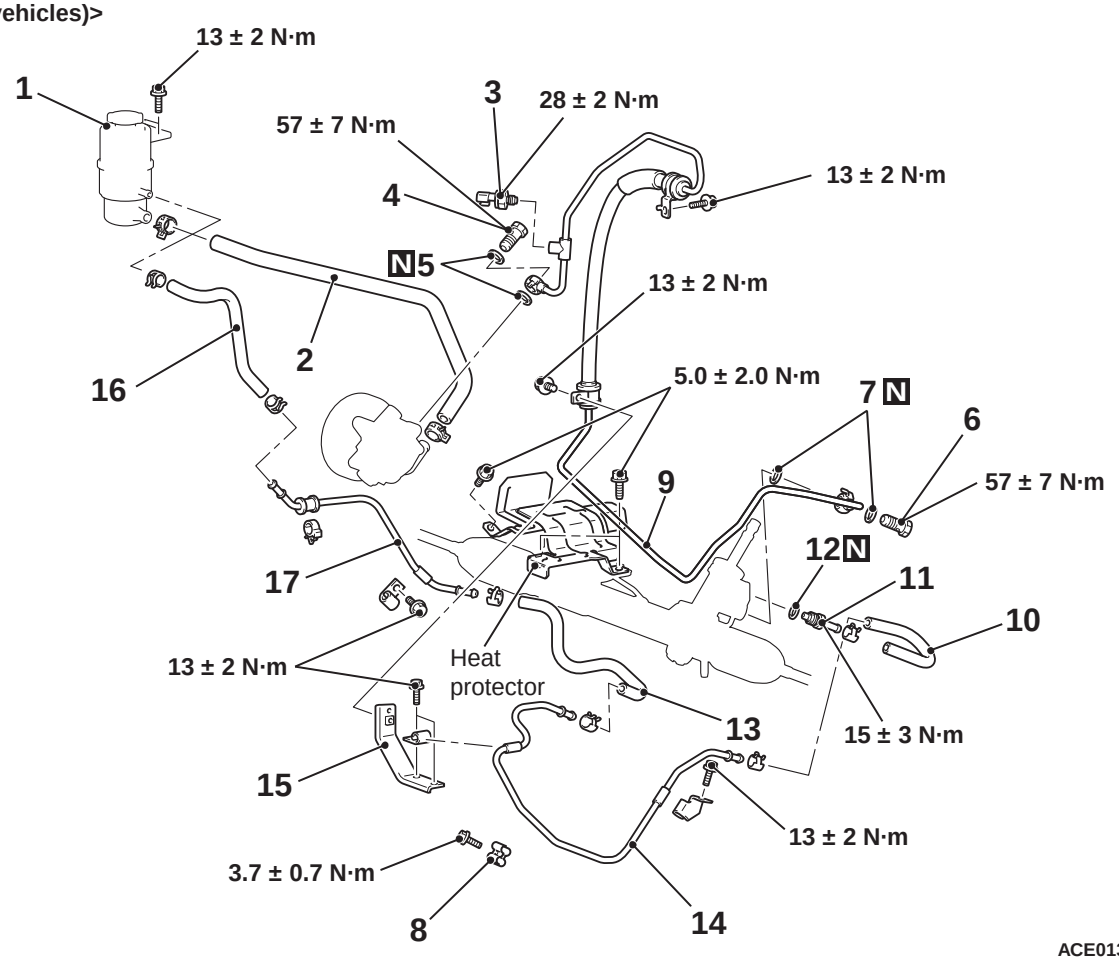

ACE01348AB

<3000 (RH drive vehicles)>

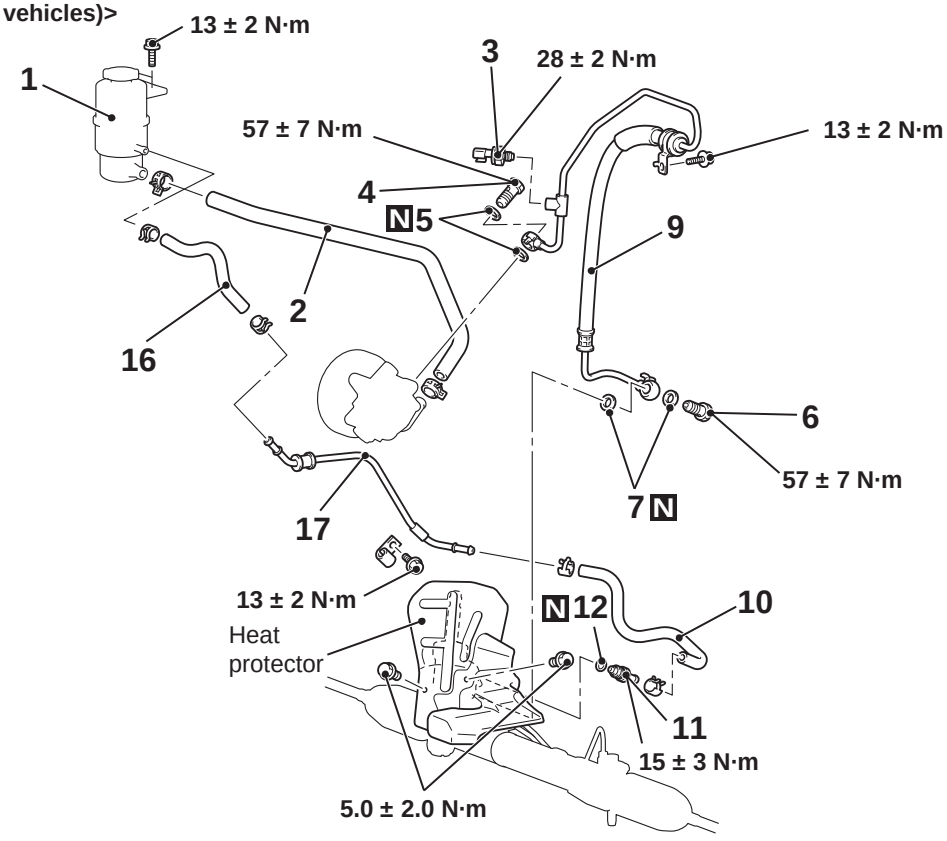

AC607895 AC

A

	Removal steps				•	Heat protector
	1. Oil reservoir	<<A>>			9.	Pressure hose assembly
	2. Suction hose				10.	Return hose
	3. Oil pressure switch	<<A>>			11.	Return tube assembly
	4. Eye bolt				12.	Gasket
	5. Gasket			>>A<<	13.	Return hose
	6. Eye bolt	<<A>>		>>A<<	14.	Return tube
	7. Gasket				15.	Hose bracket
>>E<<	8. Cooler tube clamp <Vehicles with cooler tube clamp>	<<A>>			16.	Return hose
					17.	Return tube

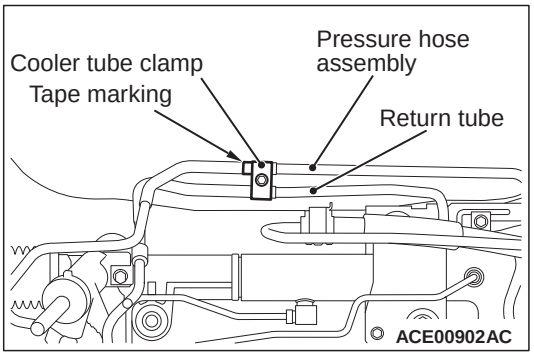

>>E<< COOLER TUBE CLAMP INSTALLATION <VEHICLES WITH COOLER TUBE CLAMP>

The end of the tape marking on the pressure hose assembly must abut on the end of the cooler tube clamp.

B

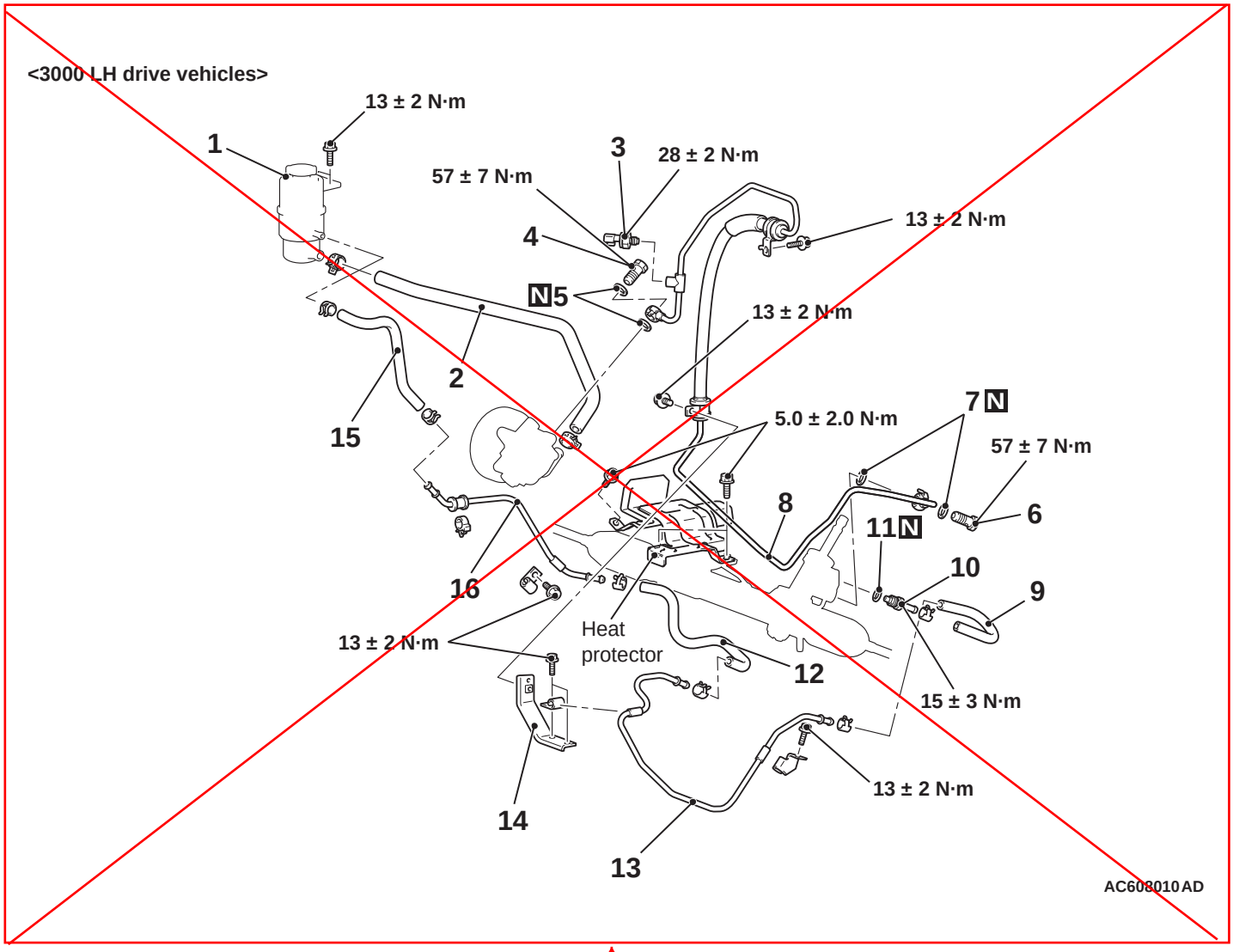

<Changed> Attached sheet 8 (4/5) A

Attached sheet 8 (2/5)

<Changed> Attached sheet 8 (4/5) B

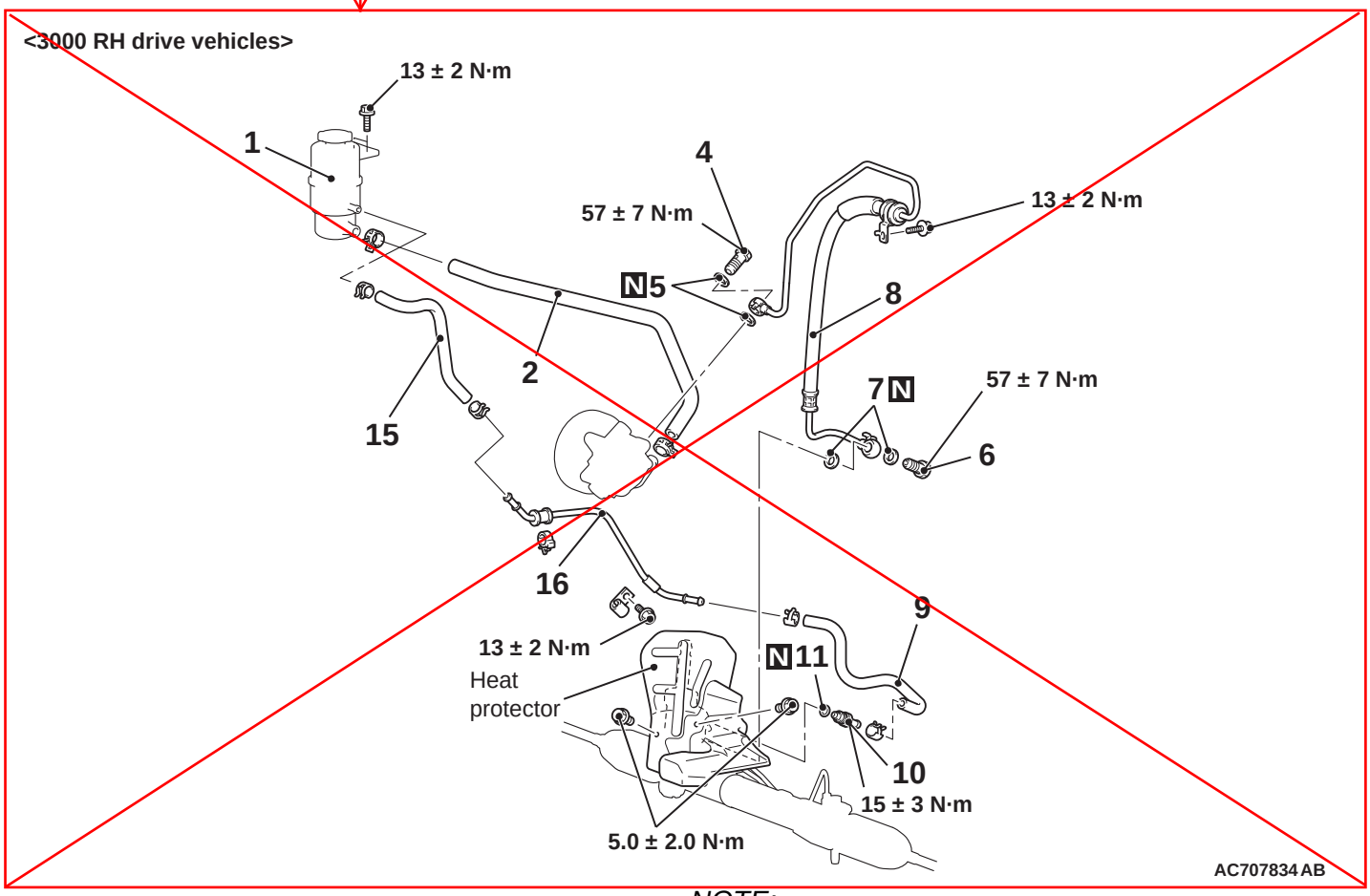

		Removal steps
	1.	Oil reservoir
	2.	Suction hose
	3.	Oil pressure switch
	4.	Eye bolt
	5.	Gasket
	6.	Eye bolt
	7.	Gasket
<<A>>	•	Heat protector
<<A>>	8.	Pressure hose assembly
	9.	Return hose
<<A>>	10.	Return tube assembly
	11.	Gasket
>>A<<	12.	Return hose
<<A>> >>A<<	13.	Return tube
	14.	Hose bracket
	15.	Return hose
<<A>>	16.	Return tube

REMOVAL SERVICE POINT

<<A>> PRESSURE HOSE ASSEMBLY, RETURN TUBE ASSEMBLY REMOVAL

Remove the heat protector, and push the engine assembly and transmission assembly toward the front of the vehicle to widen the clearance. Then, remove the pressure hose assembly and the return tube assembly.

NOTE:
When pushing the engine assembly and transaxle assembly, check that the propeller shaft assembly, front exhaust pipe, front roll stopper, and centre member assembly are already removed.

INSTALLATION SERVICE POINTS

>>A<< PRESSURE HOSE ASSEMBLY, RETURN TUBE ASSEMBLY INSTALLATION

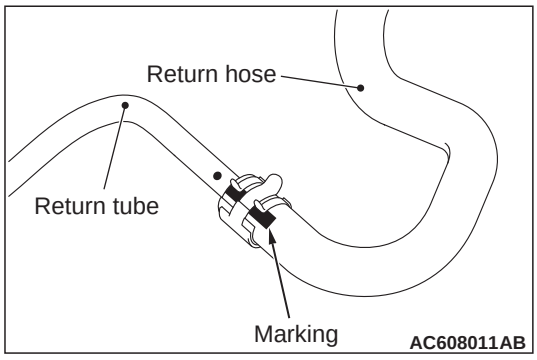

Align the pressure hose plate as shown in the figure and connect pressure hose.

<Changed>
Attached sheet 8 (5/5) A

Attached sheet 8 (3/5)

<Added>

Attached sheet 8 (5/5) B

>>B<< PRESSURE HOSE INSTALLATION

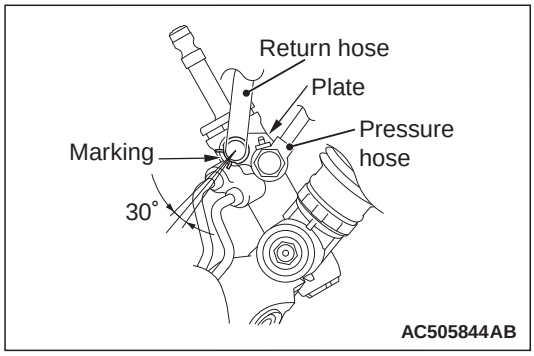

Align the pressure hose plate as shown in the figure and connect pressure hose.

>>C<< RETURN HOSE INSTALLATION

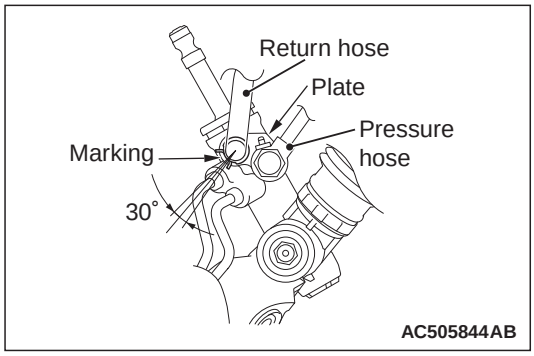

1. Align the marking as shown in the figure and connect the return hose.

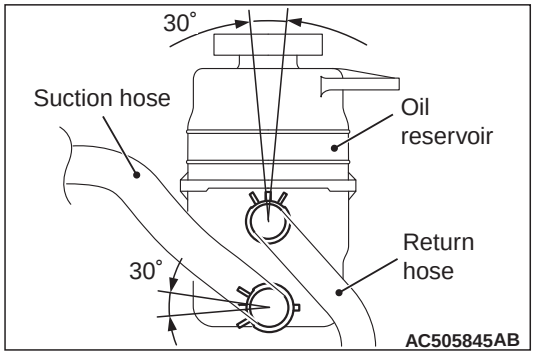

2. Align the return hose marking within the area shown in the figure and connect the return hose.

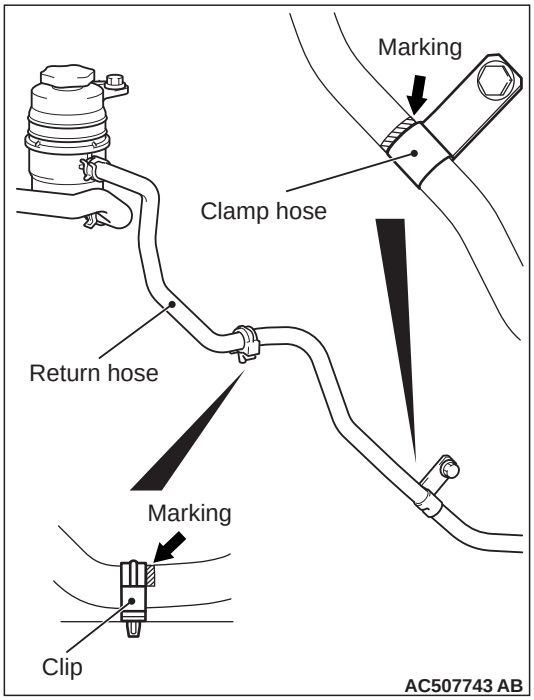

3. Using clip and hose clamp align the return hose marking within the area shown in the figure and connect the return hose.

>>D<< SUCTION HOSE INSTALLATION

<Changed> E

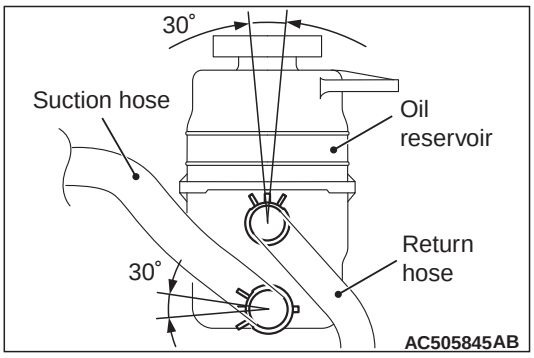

1. Align the oil reservoir side suction hose marking within the area shown in the figure and connect the suction hose.

A

<3000 LHD>

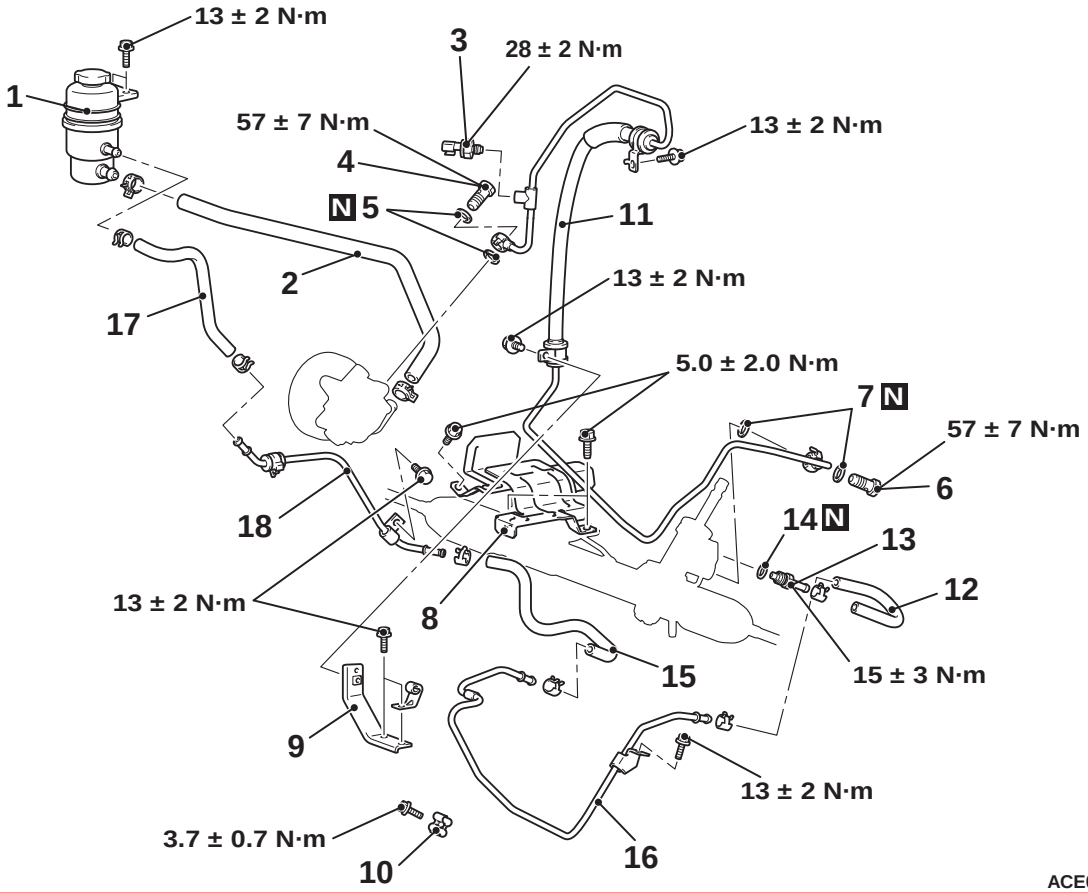

<3000 RHD>

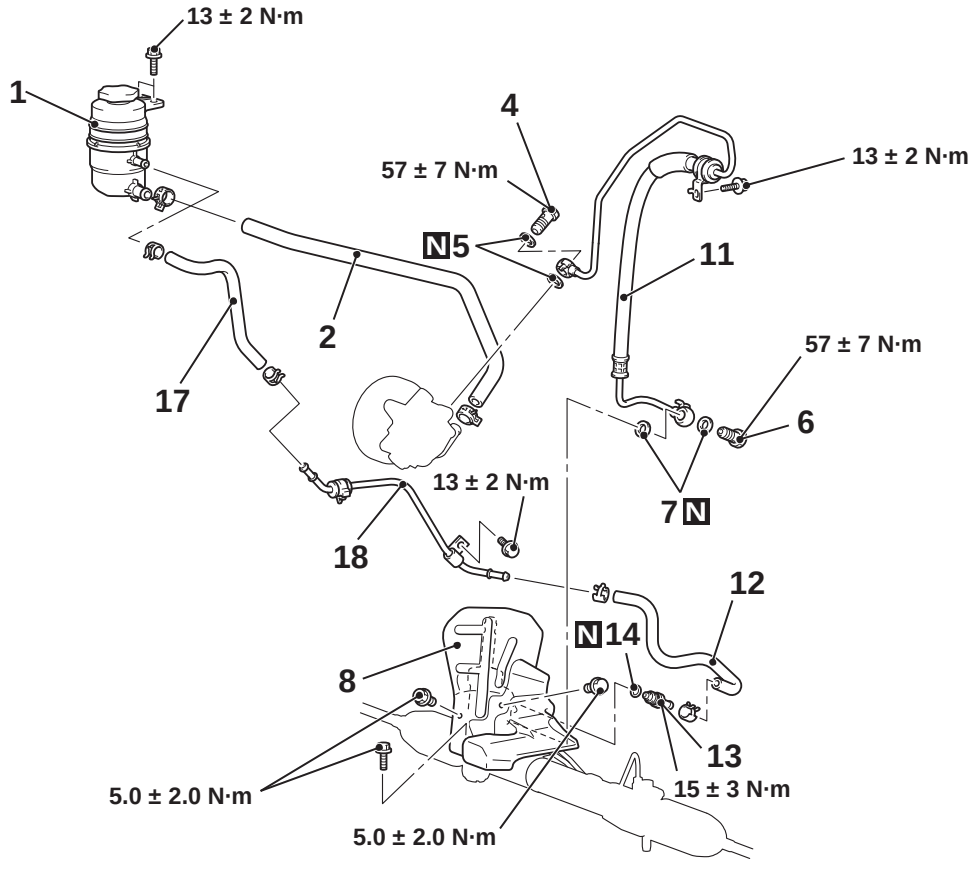

B

A

		Removal steps
	1.	Oil reservoir
>>E<<	2.	Suction hose
	3.	Oil pressure switch <CHINA>
	4.	Eye bolt
	5.	Gasket
	6.	Eye bolt
	7.	Gasket
<<A>>	8.	Heat protector
	9.	Hose bracket

		Removal steps
>>D<<	10.	Cooler tube clamp <Vehicles with cooler tube clamp>
<<A>> >>B<<	11.	Pressure hose assembly
>>C<<	12.	Return hose
<<A>>	13.	Return tube assembly
	14.	Gasket
>>A<<	15.	Return hose
<<A>>	16.	Return tube
>>C<<	17.	Return hose
<<A>>	18.	Return tube

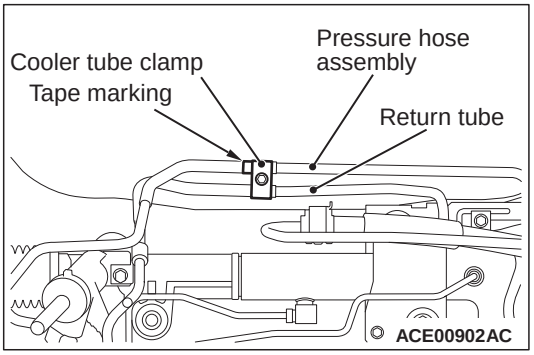

>>D<< COOLER TUBE CLAMP INSTALLATION <VEHICLES WITH COOLER TUBE CLAMP>

The end of the tape marking on the pressure hose assembly must abut on the end of the cooler tube clamp.

B

<Changed> Attached sheet 9 (4/5)

Attached sheet 9 (1/5)

<3000 LH drive vehicles>

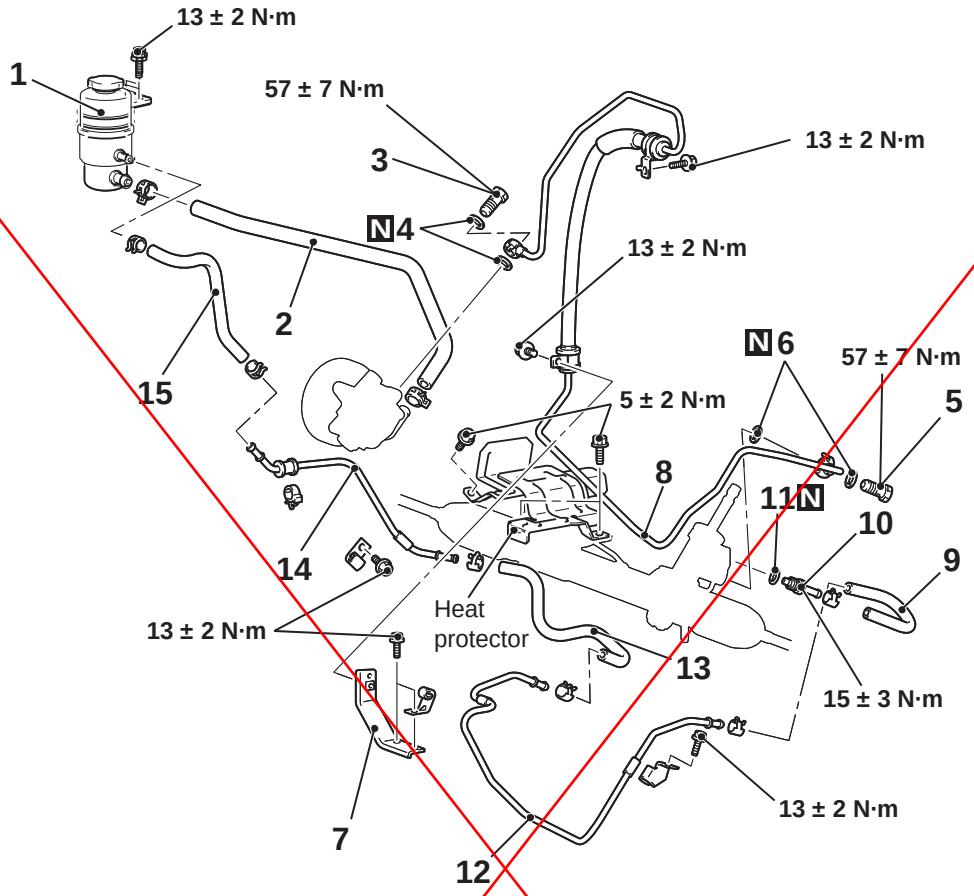

AC702688 AB

<3000 RH drive vehicles>

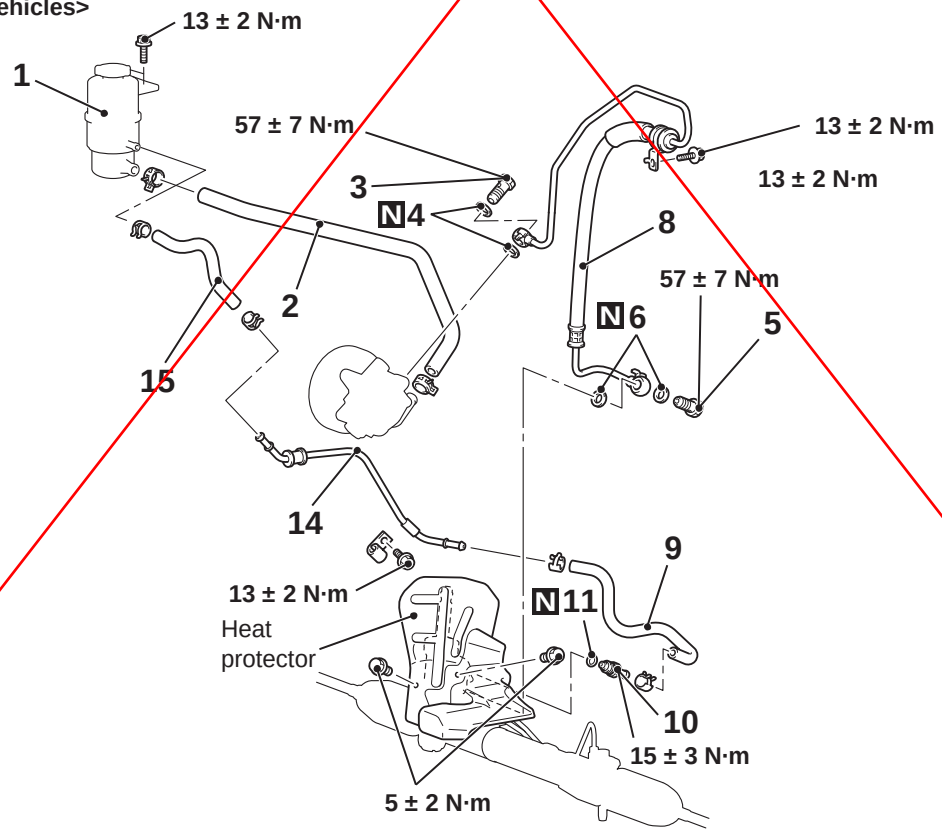

AC702692 AB

<Changed> Attached sheet 9 (5/5) A

		Removal steps
		1. Oil reservoir
		2. Suction hose
		3. Eye bolt
		4. Gasket
		5. Eye bolt
		6. Gasket
<<A>>		• Heat protector
<<A>>		7. Pressure hose assembly
		8. Return hose
<<A>>		9. Return tube assembly
		10. Gasket
	>>A<<	11. Return hose
<<A>>	>>A<<	12. Return tube
		13. Hose bracket
		14. Return hose
<<A>>		15. Return tube

REMOVAL SERVICE POINT

<<A>> PRESSURE HOSE ASSEMBLY, RETURN TUBE ASSEMBLY REMOVAL

Remove the heat protector, and push the engine assembly and transmission assembly toward the front of the vehicle to widen the clearance. Then, remove the pressure hose assembly and the return tube assembly.

NOTE:
When pushing the engine assembly and transmission assembly, check that the propeller shaft assembly, front exhaust pipe, front roll stopper, and centre member assembly are already removed.

INSTALLATION SERVICE POINTS

>>A<< PRESSURE HOSE ASSEMBLY, RETURN TUBE ASSEMBLY INSTALLATION

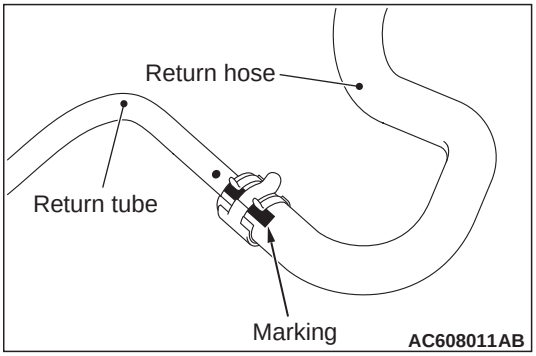

Align the pressure hose plate as shown in the figure and connect pressure hose.

>>B<< RETURN HOSE INSTALLATION

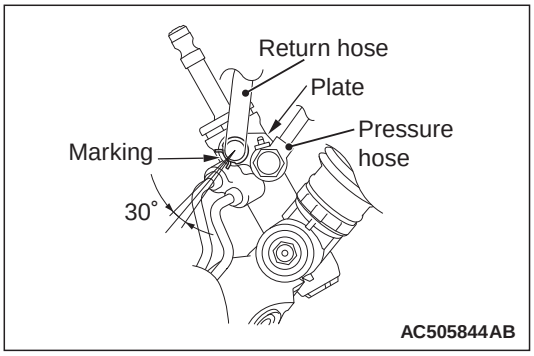

1. Align the marking (white) as shown in the figure and connect the return hose.

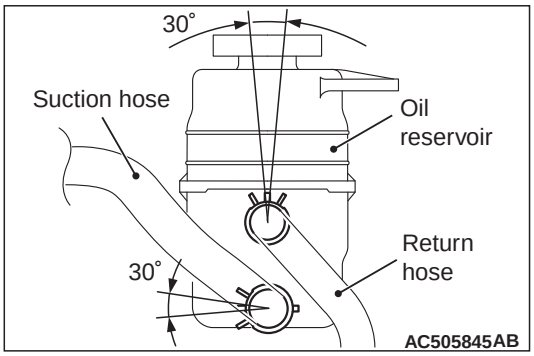

2. Align the return hose marking (green) within the area shown in the figure and connect the return hose.

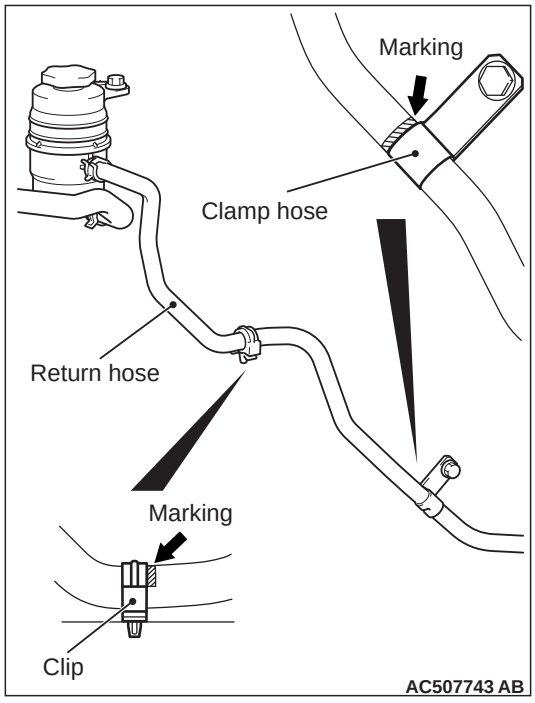

3. Using clip and hose clamp align the return hose marking (yellow) within the area shown in the figure and connect the return hose.

>>C<< PRESSURE HOSE INSTALLATION

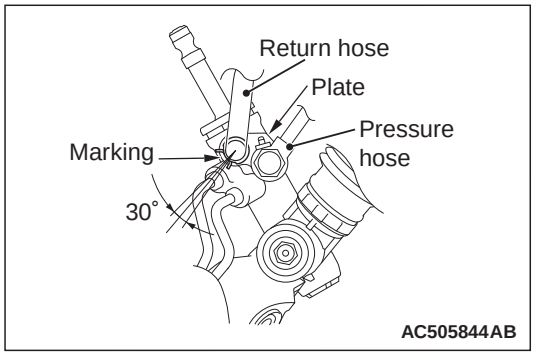

Align the pressure hose plate as shown in the figure and connect pressure hose.

>>D<< SUCTION HOSE INSTALLATION

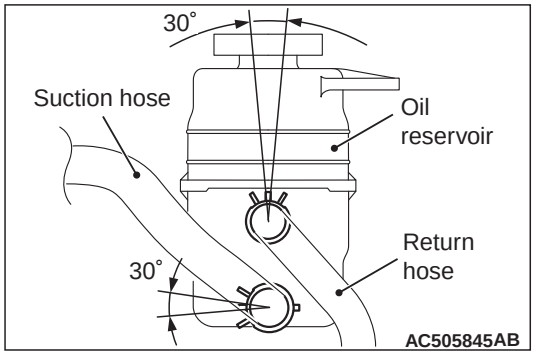

<Changed>

E

<Added>

Attached sheet 9 (5/5) B

1. Align the oil reservoir side suction hose marking (white) within the area shown in the figure and connect the suction hose.

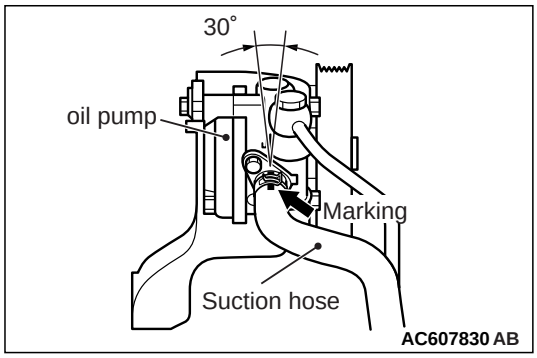

2. Align the oil pump side suction hose marking (green) within the area shown in the figure and connect the suction hose.

INSPECTION

M1372011000765

POWER STEERING OIL PRESSURE SENSOR CHECK

Refer to GROUP 13A – Troubleshooting <2400>,
Refer to GROUP 13B – Troubleshooting <3000>.

NOTE: The engine CVT–ECU <CVT> and A/T–ECU <A/T> diagnoses the power steering oil pressure sensor and sets the diagnosis code if any malfunction occurs.

<3000 LH drive vehicles>

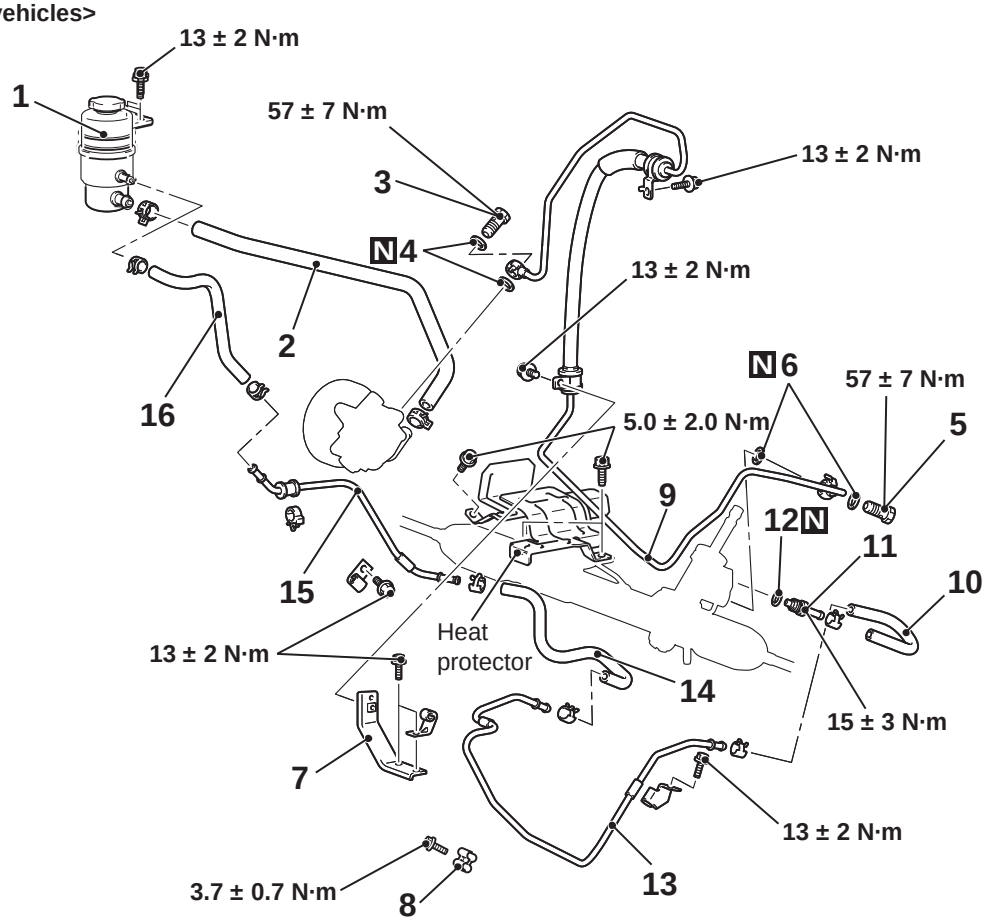

ACE01355 AB

<3000 RH drive vehicles>

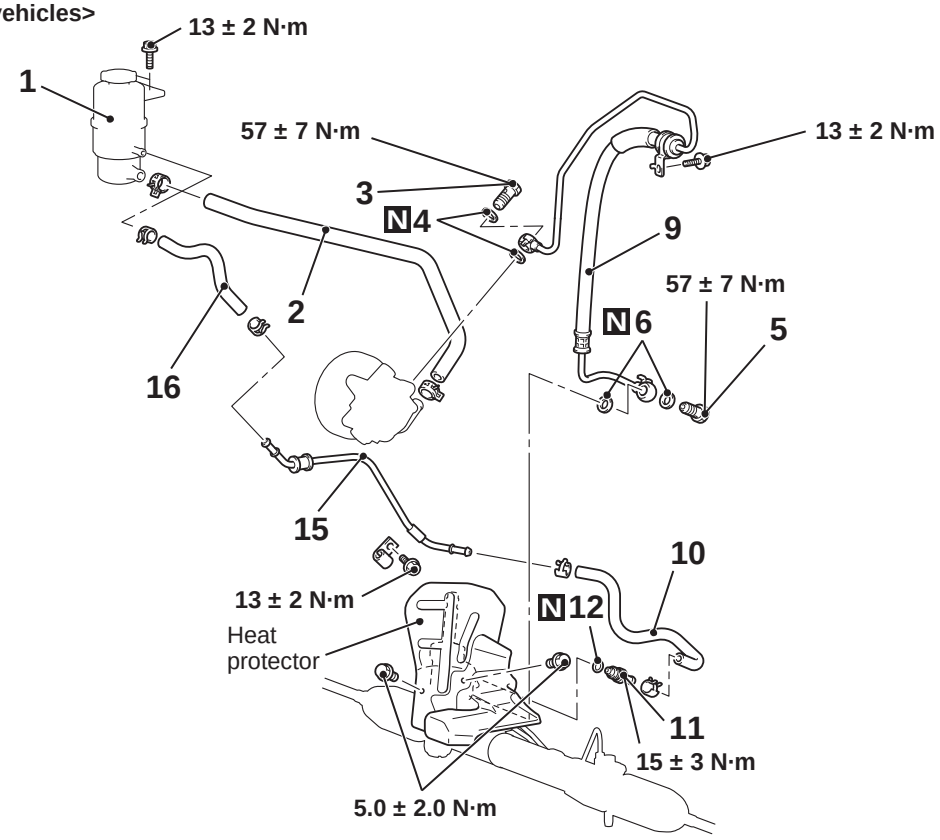

AC702692 AC

A

		Removal steps			**Removal steps**
	1.	Oil reservoir		>>D<<	8. Cooler tube clamp <Vehicles with cooler tube clamp>
	2.	Suction hose	<<A>>		9. Pressure hose assembly
	3.	Eye bolt			10. Return hose
	4.	Gasket	<<A>>		11. Return tube assembly
	5.	Eye bolt			12. Gasket
	6.	Gasket	<<A>>	>>A<<	13. Return tube
<<A>>	•	Heat protector		>>A<<	14. Return hose
	7.	Hose bracket	<<A>>		15. Return tube
					16. Return hose

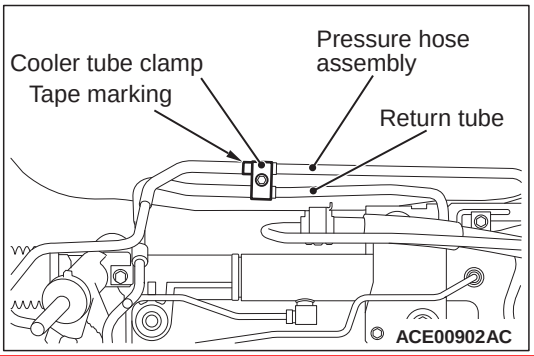

>>D<< COOLER TUBE CLAMP INSTALLATION <VEHICLES WITH COOLER TUBE CLAMP>

The end of the tape marking on the pressure hose assembly must abut on the end of the cooler tube clamp.

B

REMOVAL AND INSTALLATION <3000>

M1372005702181

Pre-removal Operation	Post-installation Operation
• Power Steering Fluid Draining, Refilling, Bleeding (Refer to P.37-10).	• Power Steering Fluid Draining, Refilling, Bleeding (Refer to P.37-10).

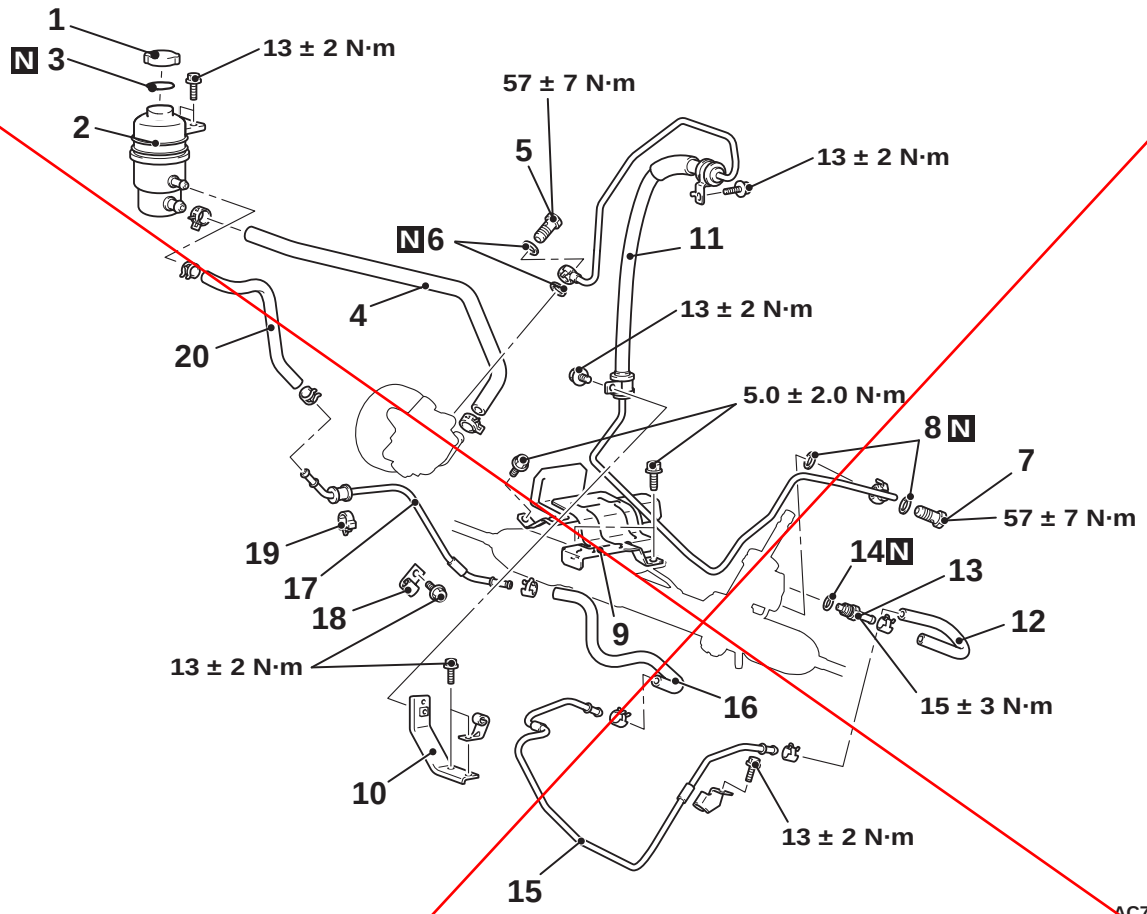

		Removal steps
	1.	Cap
	2.	Oil reservoir
	3.	O-ring
>>D<<	4.	Suction hose
	5.	Eye bolt
	6.	Gasket
	7.	Eye bolt
	8.	Gasket
<<A>>	9.	Heat protector
	10.	Hose bracket
<<A>> >>C<<	11.	Pressure hose assembly
>>B<<	12.	Return hose
<<A>>	13.	Return tube assembly
	14.	O-ring
<<A>>	15.	Return tube
>>A<<	16.	Return hose
<<A>>	17.	Return tube
	18.	Hose clamp

		Removal steps (Continued)
	19.	Clip
>>B<<	20.	Return hose

REMOVAL SERVICE POINT

<<A>> HEAT PROTECTOR/ PRESSURE HOSE ASSEMBLY/ RETURN TUBE ASSEMBLY/ RETURN TUBE REMOVAL

Remove the heat protector, and push the engine assembly and transmission assembly toward the front of the vehicle to widen the clearance. Then, remove the pressure hose assembly and the return tube assembly.

NOTE:
When pushing the engine assembly and transmission assembly, check that the propeller shaft assembly, front exhaust pipe, front roll stopper, and centre member assembly are already removed.

<Changed>

Attached sheet 10 (3/3) A

INSTALLATION SERVICE POINTS

>>A<< RETURN HOSE INSTALLATION

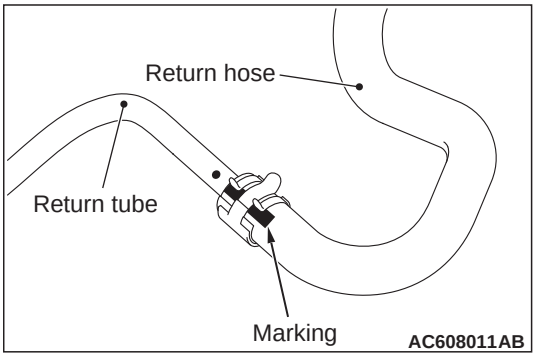

Align the making as shown in the figure and connect return hose.

>>B<< RETURN HOSE/ CLIP/ HOSE CLAMP INSTALLATION

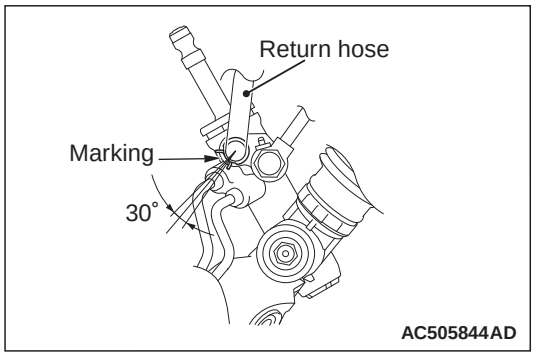

1. Align the marking as shown in the figure and connect the return hose.

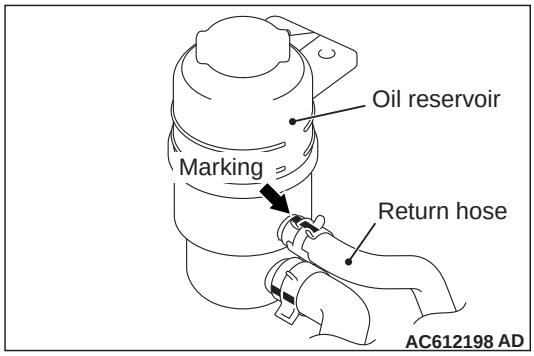

2. Align the return hose marking within the area shown in the figure and connect the return hose.

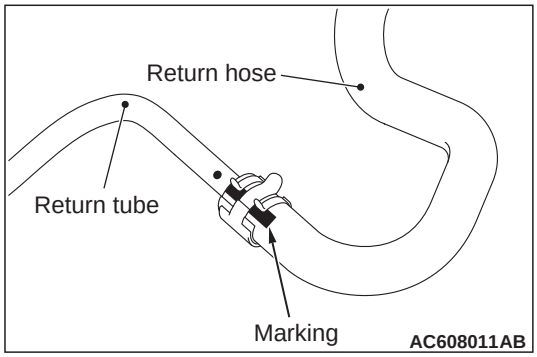

3. Align the making as shown in the figure and connect return hose.

>>C<< PRESSURE HOSE ASSEMBLY INSTALLATION

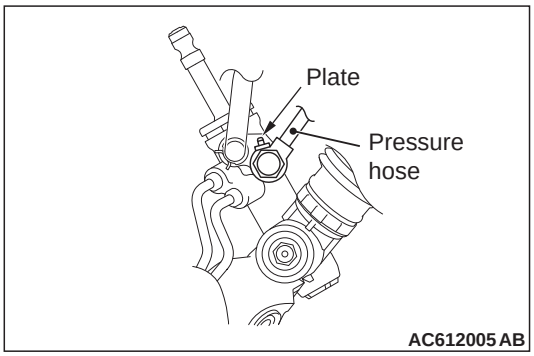

Align the pressure hose plate as shown in the figure and connect pressure hose assembly.

>>D<< SUCTION HOSE INSTALLATION

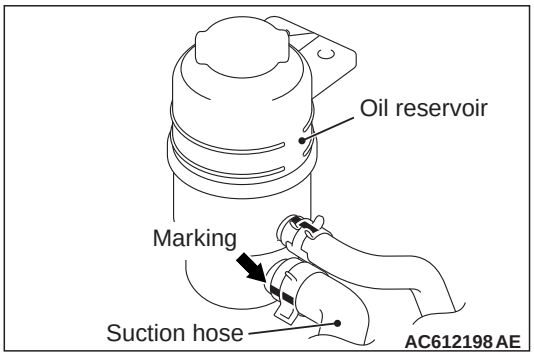

1. Align the oil reservoir side suction hose marking within the area shown in the figure and connect the suction hose.

<Changed>
E
<Added>
Attached sheet 10 (3/3) B

A

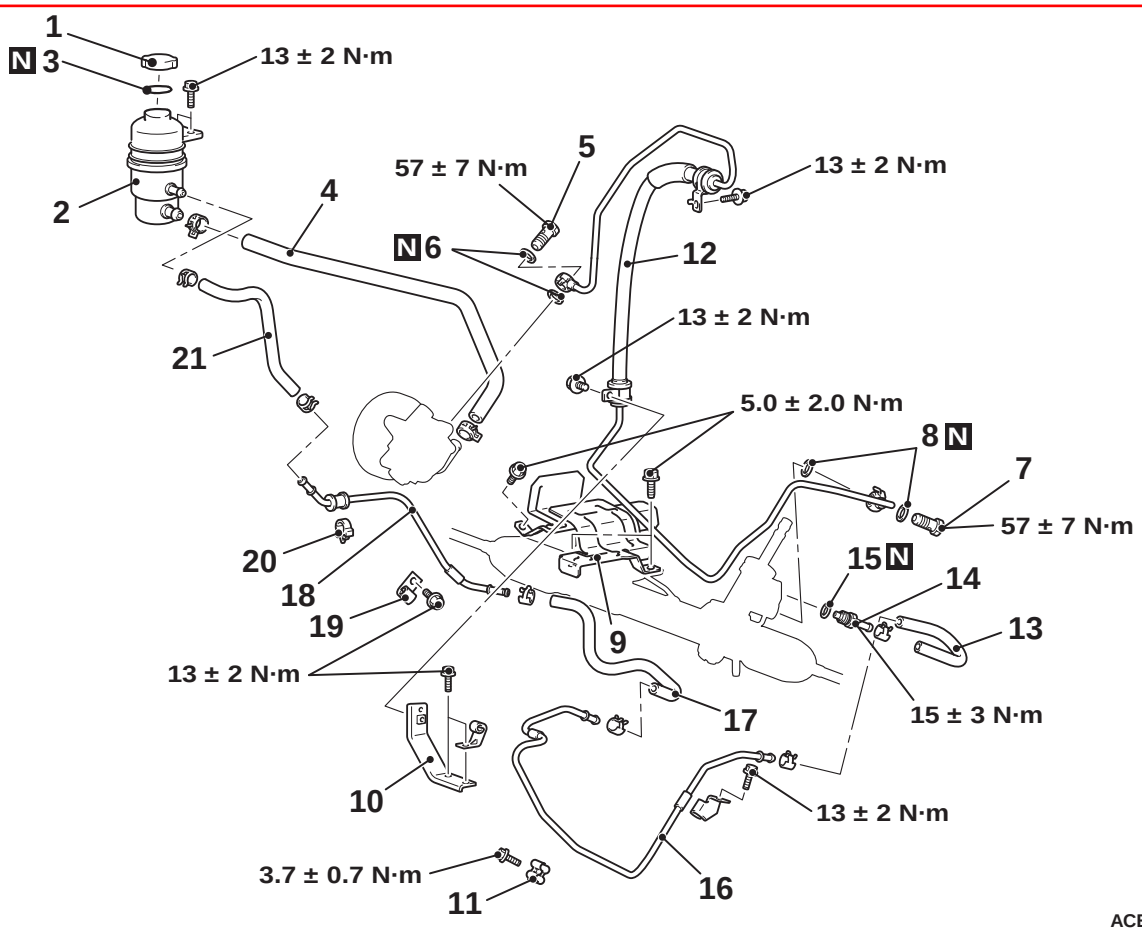

		Removal steps			Removal steps
		1. Cap	<<A>>	>>C<<	12. Pressure hose assembly
		2. Oil reservoir		>>B<<	13. Return hose
		3. O-ring	<<A>>		14. Return tube assembly
	>>E<<	4. Suction hose			15. O-ring
		5. Eye bolt	<<A>>		16. Return tube
		6. Gasket		>>A<<	17. Return hose
		7. Eye bolt	<<A>>		18. Return tube
		8. Gasket			19. Hose clamp
<<A>>		9. Heat protector			20. Clip
		10. Hose bracket		>>B<<	21. Return hose
	>>D<<	11. Cooler tube clamp <Vehicles with cooler tube clamp>			

B

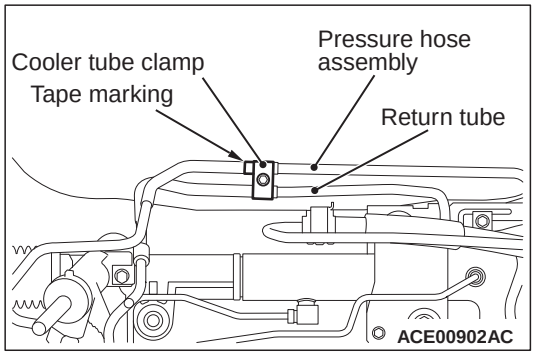

>>D<< COOLER TUBE CLAMP INSTALLATION <VEHICLES WITH COOLER TUBE CLAMP>

The end of the tape marking on the pressure hose assembly must abut on the end of the cooler tube clamp.