SERVICE BULLETIN

MITSUBISHI MOTORS

GLOBAL AFTER SALES OFFICE, MITSUBISHI MOTORS CORPORATION

PURPOSE : CORRECTION	ISSUE NO. : MSB-14EXML34-501A	DATE : 2015-04-09
SUBJECT : Error in writing of the standard value of toe-angle and camber		<DESTINATION/MODEL> (EU/RUSSIA/G.EXP/GCC/ MMAL/NZ/MMNA/USTP) <M/Y> 11-15
GROUP : Gr:34(Rear suspention)		As per attached sheet 1

1. Description :

Please refer to the attached document for the correction of the error in writing existing in the applicable service manual.

2. Affected service manuals : (Attached sheet 1)

3. About the details :

・Please refer to the attached document (Attached sheet 2-4) for other than MMNA, USTP, and Korea
・Please refer to the attached document (Attached sheet 5-7) for MMNA, USTP, and Korea.

Revision history

		MSB No.	Issued Date	
Original		MSB-14EXL42-501	2014/12/22	
Revision	A	MSB-14EXML34-501A	2015/4/9	※This time

~~Attached sheet 1 (1/2)~~

A Attached sheet 1 (1/3)

<EU/RUSSIA>

Applicable manual	Pub. No.	Applicable title (INFO ID)	Contents
2011 ASX Workshop manual	CGWE11E2-CD (ENG) CGWF11E2-CD (FRE) CGWG11E2-CD (GER) CGWS11E2-CD (SPA) CGWI11E2-CD (ITA) RUSSIA:N/A	Service specifications (M341-00-031-16700-01)	Attached sheet 2
2012 ASX Workshop manual	CGWE12E1-CD (ENG) CGWF12E1-CD (FRE) CGWG12E1-CD (GER) CGWS12E1-CD (SPA) CGWI12E1-CD (ITA) RUSSIA:N/A	Service specifications (M341-00-031-16700-01)	Attached sheet 2
2013 ASX Workshop manual	CGAE13E2-CD (ENG) CGAF13E2-CD (FRE) CGAG13E2-CD (GER) CGAS13E2-CD (SPA) CGAI13E2-CD (ITA) RUSSIA:N/A	Service specifications (M341-00-031-16700-01)	Attached sheet 2
2014 ASX Workshop manual	CGAE14E1-CD (ENG) CGAF14E1-CD (FRE) CGAG14E1-CD (GER) CGAS14E1-CD (SPA) CGAI14E1-CD (ITA) RUSSIA:N/A	Service specifications (M341-00-031-16700-01)	Attached sheet 2
2015 ASX Workshop manual	CGAE15E1-CD (ENG) CGAF15E1-CD (FRE) CGAG15E1-CD (GER) CGAS15E1-CD (SPA) CGAI15E1-CD (ITA) RUSSIA:N/A	Service specifications (M341-00-031-16700-01)	Attached sheet 2

A <G.EXP/GCC/MMAL/NZ>

Applicable manual	Pub. No.	Applicable title (INFO ID)	Contents
A 2011 ASX Workshop manual	PWPE1006R (ENG) PWPS1007R (SPA) MMAL/NZ:DRAFT	Service specifications (M341-00-031-23100-01)	~~Attached sheet 2~~ Attached sheet 2-1
		Rear wheel alignment check and adjustment (M341-01-101-19300-01)	Attached sheet 3
A 2012 ASX Workshop manual	PWPE1107R (ENG) PWPS1108R (SPA) MMAL/NZ:DRAFT	Service specifications (M341-00-031-23100-01)	~~Attached sheet 2~~ Attached sheet 2-1
		Rear wheel alignment check and adjustment (M341-01-101-19300-01)	Attached sheet 3
2013 ASX Workshop manual	<G.EXP/GCC> PWPE1204R (ENG) PWPS1205R (SPA) <MMAL> AU900409 <NZ> DRAFT	~~Service specifications~~ ~~(M341-00-031-23100-01)~~ Added above “Special tool” (M341-00-061-05000-01)	~~Attached sheet 2~~ Attached sheet 4
		~~Rear wheel alignment check and adjustment~~ ~~(M341-01-101-19300-01)~~ Added above “Control link, upper arm and lower arm” (M341-00-481-02300-01)	~~Attached sheet 3~~ Attached sheet 4

~~Attached sheet 1 (2/2)~~

Attached sheet 1 (2/3)

Applicable manual	Pub. No.	Applicable title (INFO ID)	Contents
2014 ASX Workshop manual	<G.EXP/GCC> PWPE1312R (ENG) PWPS1313R (SPA) <MMAL> AU900410 <NZ> DRAFT	~~Service specifications~~ ~~(M341-00-031-23100-01)~~ Added above “Special tool” (M341-00-061-05000-01)	~~Attached sheet 2~~ Attached sheet 4
		~~Rear wheel alignment check and adjustment~~ ~~(M341-01-101-19300-01)~~ Added above “Control link, upper arm and lower arm” (M341-00-481-02300-01)	~~Attached sheet 3~~ Attached sheet 4
2015 ASX Workshop manual	<G.EXP/GCC> PWPE1412R (ENG) PWPS1413R (SPA) <MMAL> AU900418 <NZ> DRAFT	~~Service specifications~~ ~~(M341-00-031-23100-01)~~ Added above “Special tool” (M341-00-061-05000-01)	~~Attached sheet 2~~ Attached sheet 4
		~~Rear wheel alignment check and adjustment~~ ~~(M341-01-101-19300-01)~~ Added above “Control link, upper arm and lower arm” (M341-00-481-02300-01)	~~Attached sheet 3~~ Attached sheet 4

<EU/EXP/MMAL/NZ>

Applicable manual	Pub. No.	Applicable title (INFO ID)	Content
2012 PEUGEOT 4008/ CITROEN C4 AIRCROSS (PZC) Workshop manual	N/A	Service specifications (M341-00-031-23100-01)	~~Attached sheet 2~~ Attached sheet 2-1

<MMNA>

Applicable manual	Pub. No.	Applicable title (INFO ID)	Contents
2013 ASX Service manual	MSCD-017B-2013	Service specifications (M341-00-031-29700-01)	Attached sheet 5
		Rear wheel alignment check and adjustment (M341-01-101-24500-01)	Attached sheet 6
2014 ASX Workshop manual	MSCD-017B-2014	Service specifications (M341-00-031-29700-01)	Attached sheet 5
		Rear wheel alignment check and adjustment (M341-01-101-24500-01)	Attached sheet 6
2015 ASX Workshop manual	MSCD-017B-2015	Service specifications (M341-00-031-29700-01)	Attached sheet 5
		Rear wheel alignment check and adjustment (M341-01-101-24500-01)	Attached sheet 6

Attached sheet 1 (3/3)

<Korea>

A

Applicable manual	Pub. No.	Applicable title (INFO ID)	Contents
A 2013 RVR Service manual	N/A	Added above “Special tool” (M341-00-061-05000-01)	Attached sheet 7
		Added above “Control link, upper arm and lower arm” (M341-00-481-04500-01)	Attached sheet 7

Attached sheet 2

SERVICE SPECIFICATIONS

0° 07' ± 0° 05' <Correct>

Item		Standard value
Toe in mm	At the centre of tyre tread mm	3 ± 2
Toe-angle (per wheel)		~~0 ° 08' ± 0 ° 15'~~ <Incorrect>
Camber	<Incorrect>	~~−0°25' ± 0°30'~~ (Difference between right and left wheels must 0°30' or less)
Stabilizer link ball joint rotation torque N·m		0.5 - 2.9

<Correct>

A

2011MY and 2012MY: -0° 25' ± 0° 30'

2013MY to 2015 MY
Except for Russia (Vehicles without 18-inch wheels and tyres) : -0° 40' ± 0° 45
Russia (Vehicles with 18-inch wheels and tyres) : -0° 30' ± 0° 45

A Attached sheet 2-1

SERVICE SPECIFICATIONS

0° 07' ± 0° 05' <Correct>

Item		Standard value
Toe in mm	At the centre of tyre read mm	3 ± 2
Toe-angle (per wheel)		~~0 ° 08' ± 0 ° 15'~~ <Incorrect>
Camber		–0°25' ± 0°30' (Difference between right and left wheels must 0°30' or less)
Stabilizer link ball joint rotation torque N·m		0.5 - 2.9

Attached sheet 3

ON-VEHICLE SERVICE

REAR WHEEL ALIGNMENT CHECK AND ADJUSTMENT

M1341011001193

1. Before the wheel alignment measurement, adjust the rear suspension, wheel, and tyres in good condition.
2. Park the vehicle on a level surface to measure the wheel alignment.

TOE-IN

0° 07' ± 0° 05' <Correct>

Standard value:
At the centre of tyre tread: 3 ± 2 mm
Toe-angle (per wheel): ~~0 ° 03' ± 0 ° 15'~~ <Incorrect>

If it is out of the standard range, adjust as follows:

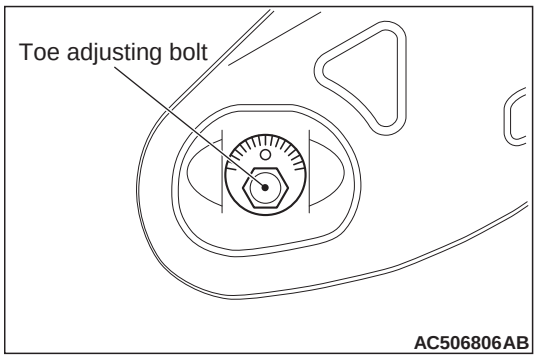

Turn the toe adjusting bolt (the mounting bolt inside the body on the control link) to adjust.

Left wheels: Clockwise (+) Toe in
Right wheels: Clockwise (–) Toe in

Toe-in varies approximately 2.6 mm (equivalent to 0°16' of the toe angle for one side) for each scale mark.

CAMBER

Standard value: –0°25' ±0°30' (difference between right and left wheels must 0°30' or less)

NOTE:

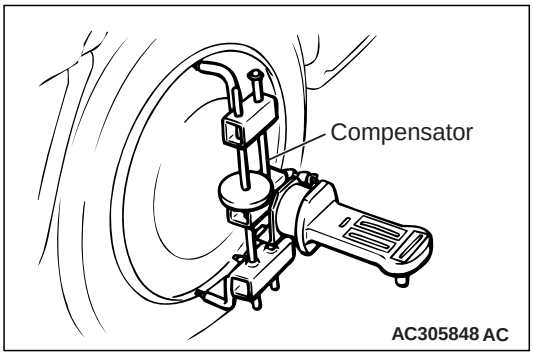

For 2WD vehicles with aluminium wheels, attach the camber/caster/kingpin gauge by using a compensator.

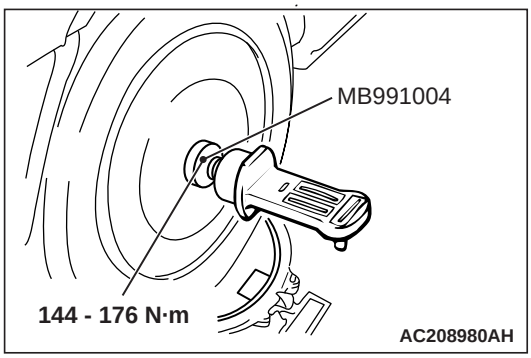

For 4WD vehicles with aluminium wheels, tighten special tool wheel alignment gauge attachment (MB991004) to the specified torque, then measure the camber.

- *The camber is pre-adjusted at factory and is not adjustable.*

GENERAL INFORMATION

M1341000102155

OUTLINE OF CHANGE

The following service procedure has been established.The other service procedures are the same as before.

- A sheet metal type trailing arm has been used.
- Now the drive shaft nut is secured by crimping <4WD>.

SPECIAL TOOLS

M1341000601050

Tool	Number	Name	Use
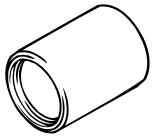 MB990890	MB990890	Arm bushing remover and installer	Trailing arm bushing removal and press-fit
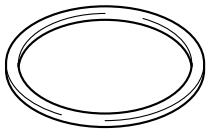 B992865	MB992865	Spacer base	

<Added>

SERVICE SPECIFICATIONS

Item	Standard value
Camber	–0°40' ± 0°45' (Difference between right and left wheels must 0°30' or less)

<Added>
Insert the attached sheet 4 (3/3)

A Attached sheet 4 (2/3)

CONTROL LINK, UPPER ARM AND LOWER ARM

REMOVAL AND INSTALLATION

M1341004801023

⚠ CAUTION

The parts indicated by * are the bolts/nuts with friction coefficient stabilizer. In removal, ensure there is no damage, clean dust and soiling from the bearing and thread surfaces, and tighten them to the specified torque.

Post-installation operation
- Using your fingers, press the Ball Joint Dust Cover to check for a crack or damage.
- Wheel alignment check and adjustment.
- Check the beam direction of the headlamp (Low beam) (Refer to GROUP 54A – Headlamp Aiming).

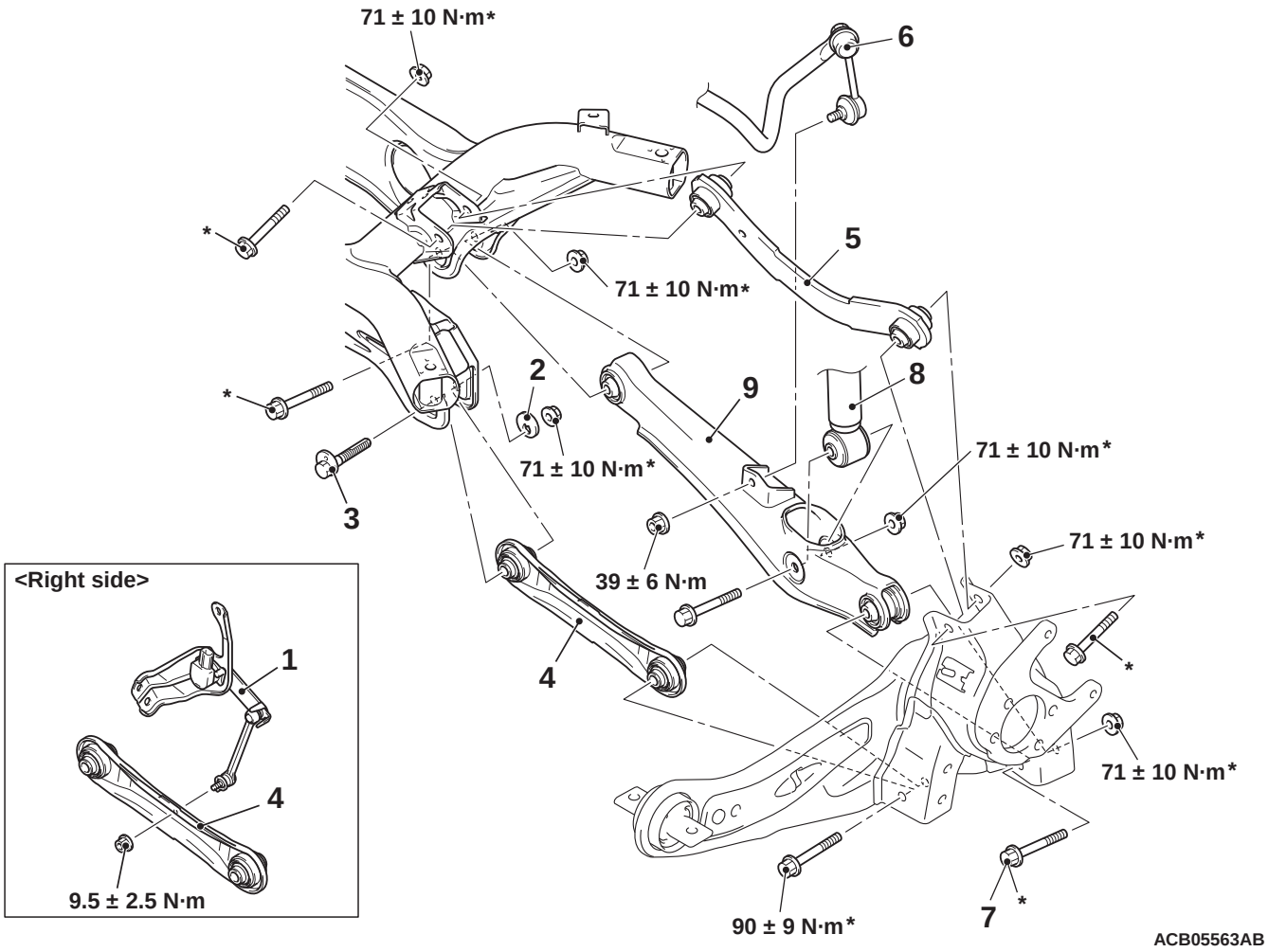

ACB05563AB

Control link and upper arm removal

		1.	Rear height sensor to control link connection <Vehicles with discharge headlamp>
		2.	Plate
<<**A**>>	>>**B**<<	3.	Toe adjusting bolt
<<**A**>>	>>**B**<<	4.	Control link
	>>**A**<<	5.	Upper arm

Lower arm removal steps

		1.	Rear height sensor to control link connection Vehicles with discharge headlamp>
		6.	Stabilizer link connection
<<**B**>>		7.	Lower arm and trailing arm connection
<<**B**>>		8.	Shock absorber and lower arm connection
		9.	Lower arm

<Added>

ON-VEHICLE SERVICE

REAR WHEEL ALIGNMENT CHECK AND ADJUSTMENT

M1341011001405

CAMBER

Standard value: −0°40' ±0°45' (Difference between right and left wheels must 0.30' or less)

NOTE:

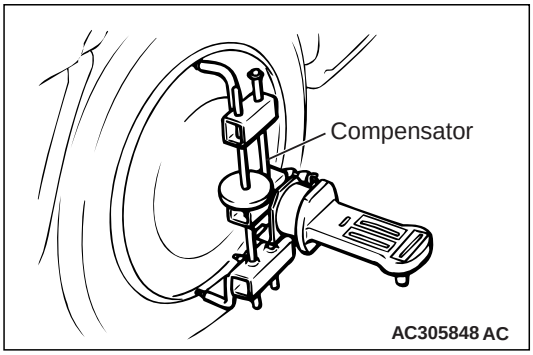

For 2WD vehicles with aluminium wheels, attach the camber/caster/kingpin gauge by using a compensator.

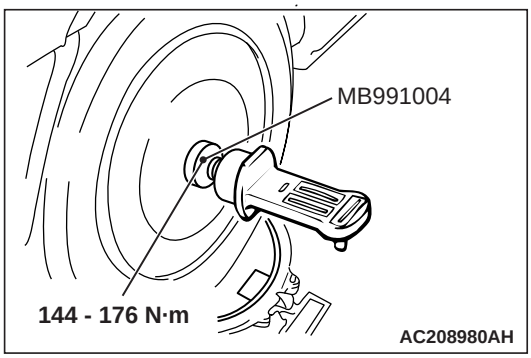

For 4WD vehicles with aluminium wheels, tighten special tool wheel alignment gauge attachment (MB991004) to the specified torque, then measure the camber.

- *The camber is pre-adjusted at factory and is not adjustable.*

SERVICE SPECIFICATIONS

M1341000301297

Item	Standard value
Toe in mm (in)	3 ± 2 (0.12 ± 0.08)
Camber	~~–0°25' ± 0°30'*~~ <Incorrect>
Stabilizer link ball joint rotation torque N·m (in-lb)	0.5 – 2.9 (5 – 25)

*NOTE: *: Difference between right and left wheels must be 0°30' or less*

-0° 30' ± 0° 45' * <Correct>

Attached sheet 6

ON-VEHICLE SERVICE

REAR WHEEL ALIGNMENT CHECK AND ADJUSTMENT

M1341011001245

1. Before the wheel alignment measurement, adjust the rear suspension, wheel, and tires in good condition.
2. Park the vehicle on a level surface to measure the wheel alignment.

TOE-IN

Standard value: 3 ± 2 mm (0.12 ± 0.08 inch)

If it is out of the standard range, adjust as follows:
Turn the toe adjusting bolt (the mounting bolt inside the body on the control link) to adjust.

Left wheels: Clockwise → (+) Toe in
Right wheels: Clockwise → (-) Toe in

Toe-in varies approximately 2.6 mm (0.10 inch) (equivalent to 0°16' of the toe angle for one side) for each scale mark.

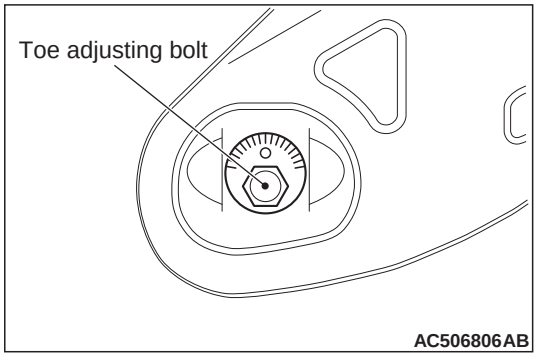

CAMBER

-0° 30' ± 0° 45' <Correct>

Required Special Tools:

- MB991004: Wheel alignment gauge attachment <AWD vehicles with aluminum wheels>

<Incorrect>

Standard value: ~~–0°25' ±0°30'~~ (difference between right and left wheels must be 0°30' or less)

NOTE:

- *For FWD vehicles with aluminum wheels, attach the camber/caster/kingpin gauge by using a compensator.*

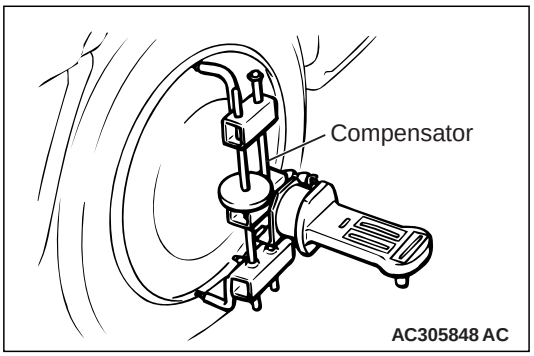

- *For AWD vehicles with aluminum wheels, tighten special tool MB991004 to the specified torque, then measure the camber.*
- *The camber is pre-adjusted at factory and is not adjustable.*

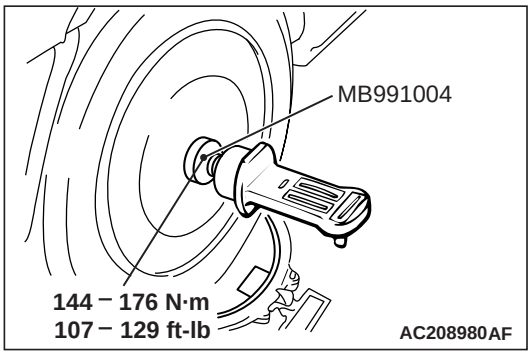

GENERAL INFORMATION

M1341000102155

OUTLINE OF CHANGE

The following service procedure has been established.The other service procedures are the same as before.

- A sheet metal type trailing arm has been used.
- Now the drive shaft nut is secured by crimping <AWD>.

SPECIAL TOOLS

M1341000601050

Tool	Number	Name	Use
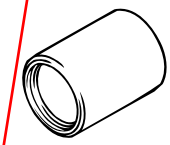 MB990890	MB990890	Arm bushing remover and installer	Trailing arm bushing removal and press-fit
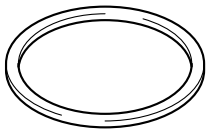 B992865	MB992865	Spacer base	

<Added>

SERVICE SPECIFICATIONS

Item	Standard value
Camber	–0°30' ± 0°45'*

*NOTE: *: Difference between right and left wheels must be 0°30' or less*

<Added>
Insert the attached sheet 7(3/3)

A Attached sheet 7 (2/3)

CONTROL LINK, UPPER ARM AND LOWER ARM

REMOVAL AND INSTALLATION

M1341004801045

⚠ CAUTION

The parts indicated by * are the bolts/nuts with friction coefficient stabilizer. In removal, ensure there is no damage, clean dust and soiling from the bearing and thread surfaces, and tighten them to the specified torque.

Post-installation operation
- Using your fingers, press the Ball Joint Dust Cover to check for a crack or damage.
- Wheel alignment check and adjustment.
- Check the beam direction of the headlight (Low beam) (Refer to GROUP 54A – Headlight Aiming).

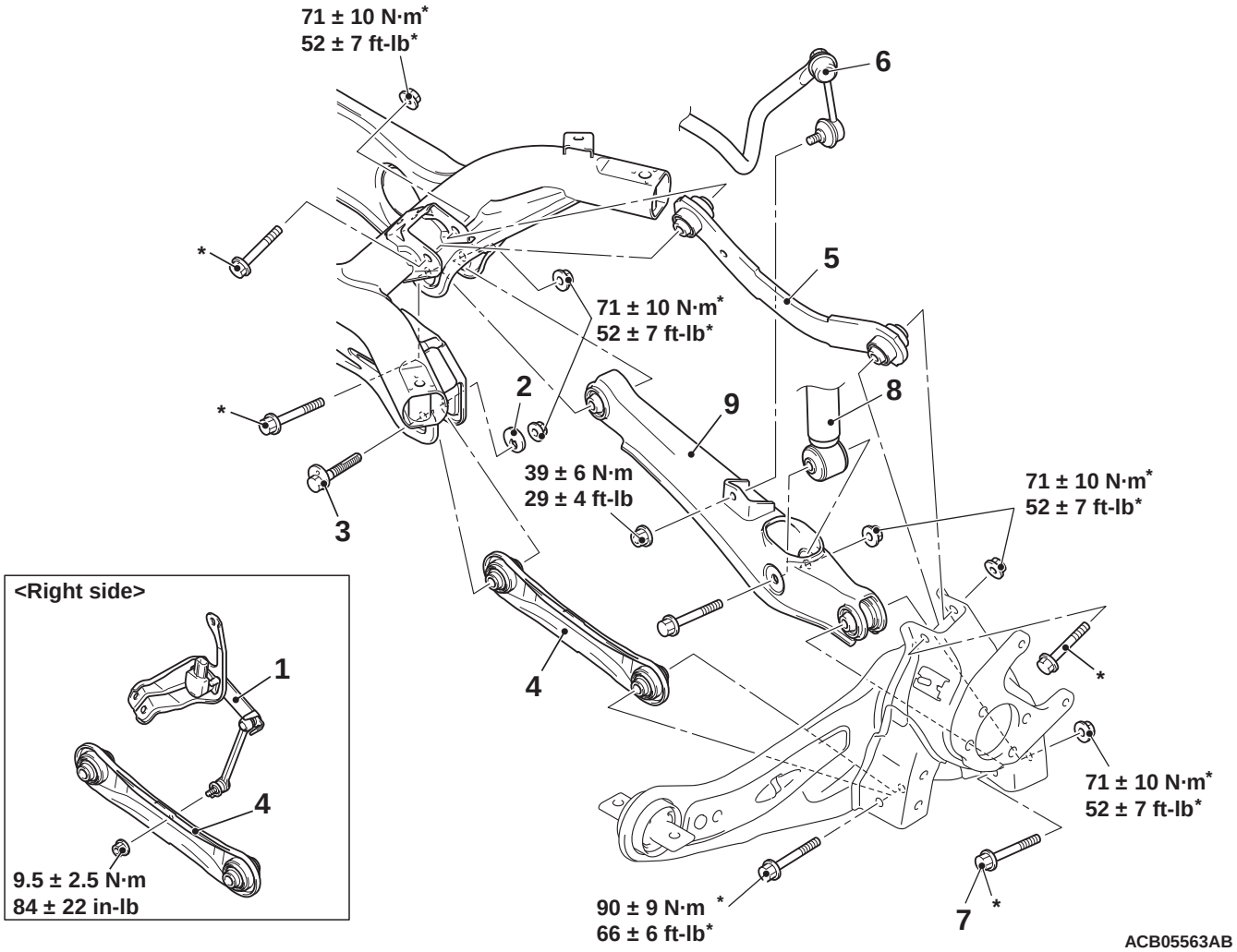

ACB05563AB

Control link and upper arm removal

1. Rear height sensor to control link connection <Vehicles with discharge headlight>
2. Plate
3. Toe adjusting bolt
4. Control link
5. Upper arm

Lower arm removal steps

1. Rear height sensor to control link connection <Vehicles with discharge headlight>
6. Stabilizer link connection
7. Lower arm and trailing arm connection
8. Shock absorber and lower arm connection
9. Lower arm

<<A>> >>B<< <<A>> >>B<< >>A<< <<B>> <<B>>

<Added>

ON-VEHICLE SERVICE

REAR WHEEL ALIGNMENT CHECK AND ADJUSTMENT

M1341011001397

CAMBER

Required Special Tools:

- MB991004: Wheel alignment gauge attachment <AWD vehicles with aluminum wheels>

  Standard value: −0°30' ±0°45' (difference between right and left wheels must be 0°30' or less)

NOTE:

- *For FWD vehicles with aluminum wheels, attach the camber/caster/kingpin gauge by using a compensator.*

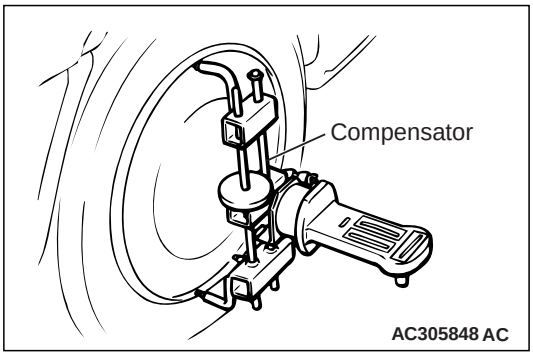

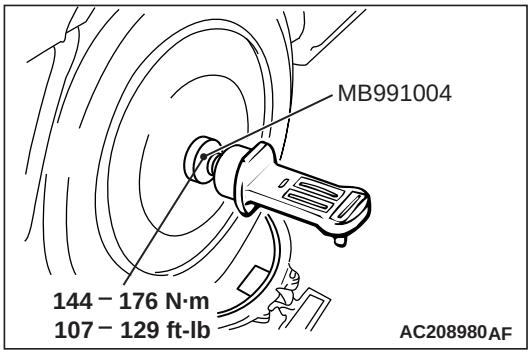

- *For AWD vehicles with aluminum wheels, tighten special tool MB991004 to the specified torque, then measure the camber.*
- *The camber is pre-adjusted at factory and is not adjustable.*