SERVICE BULLETIN

MITSUBISHI MOTORS

GLOBAL AFTER SALES OFFICE, MITSUBISHI MOTORS CORPORATION

PURPOSE : CHANGE	ISSUE NO. : MSB-14EXML35-001	DATE : 2014-01-23
SUBJECT : TIGHTENING TORQUE CHANGES OF THE BRAKE TUBE		<DESTINATION/MODEL> (As per attached sheet 1) <M/Y> 13-14
GROUP : SERVICE BRAKE (Gr:35)		MIRAGE/SPACE STAR/ATTRAGE/MIRAGE G4

1. Description :

Please refer to the attached document for the information about the change of mention in the applicable service manual. (Tightening torque of the brake tube between the brake master cylinder and the hydraulic unit is changed)

2. Affected service manuals :

Please refer to the attached document (Attached sheet 1)

3. About the details :

Please refer to the attached document (Attached sheet 5-9)

MIRAGE/SPACE STAR

Attached sheet 1

<Thailand>

Applicable manual	Pub No.	Applicable title (INFO ID)	Contents
2013 MIRAGE Workshop Manual	DRAFT	MASTER CYLINDER ASSEMBLY AND BRAKE BOOSTER ASSEMBLY REMOVAL AND INSTALLATION (M351-00-373-20200-01)	Attached sheet 5(2/2)
		HYDRAULIC UNIT REMOVAL AND INSTALLATION (M352-00-861-23000-01)	Attached sheet 6

<Philippines>

Applicable manual	Pub No.	Applicable title (INFO ID)	Content
2013 MIRAGE Workshop Manual	PWFE1201RP	MASTER CYLINDER ASSEMBLY AND BRAKE BOOSTER ASSEMBLY REMOVAL AND INSTALLATION (M351-00-373-27900-01)	Attached sheet 5(1/2)

<EU>

Applicable manual	Pub No.	Applicable title (INFO ID)	Contents
2013 MIRAGE/ SPACE STAR Workshop Manual	CA0E13E1-CD (Eng) CA0F13E1-CD (Fre) CA0G13E1-CD (Ger) CA0S13E1-CD (Spa) CA0I13E1-CD (Ita)	MASTER CYLINDER ASSEMBLY AND BRAKE BOOSTER ASSEMBLY REMOVAL AND INSTALLATION <LHD> (M351-00-373-26800-01)	Attached sheet 5(1/2)
		MASTER CYLINDER ASSEMBLY AND BRAKE BOOSTER ASSEMBLY REMOVAL AND INSTALLATION <RHD> (M351-00-373-25700-01)	Attached sheet 5(2/2)
		HYDRAULIC UNIT REMOVAL AND INSTALLATION (M355-00-560-94700-01)	Attached sheet 7

<MMNA>

Applicable manual	Pub No.	Applicable title (INFO ID)	Contents
2014 MIRAGE Service Manual	MSCD-016B-2014	MASTER CYLINDER ASSEMBLY AND BRAKE BOOSTER ASSEMBLY REMOVAL AND INSTALLATION (M351-00-373-35400-01)	Attached sheet 8
		HYDRAULIC UNIT REMOVAL AND INSTALLATION (M355-00-560-94700-01)	Attached sheet 9

ATTRAGE/MIRAGE G4

<EU>

Applicable manual	Pub No.	Applicable title (INFO ID)	Contents
2014 ATTRAGE Workshop Manual	CA1E14E1-CD (Eng) CA1F14E1-CD (Fre) CA1G14E1-CD (Ger) CA1S14E1-CD (Spa) CA1I14E1-CD (Ita)	MASTER CYLINDER ASSEMBLY AND BRAKE BOOSTER ASSEMBLY REMOVAL AND INSTALLATION (M351-00-373-50300-01)	Attached sheet 5(1/2)
		HYDRAULIC UNIT REMOVAL AND INSTALLATION (M355-00-560-94700-01)	Attached sheet 7

MASTER CYLINDER ASSEMBLY AND BRAKE BOOSTER ASSEMBLY

REMOVAL AND INSTALLATION

M1351003703268

<LHD>

⚠ CAUTION

The master cylinder cannot be disassembled. Be careful not to remove the primary piston.

Pre-removal Operation	Post-installation Operation
• Brake Fluid Draining • Battery Removal (Refer to GROUP 54A – Battery).	• Battery Installation (Refer to GROUP 54A – Battery). • Brake Fluid Supplying and Air Bleeding • Brake Pedal Adjustment

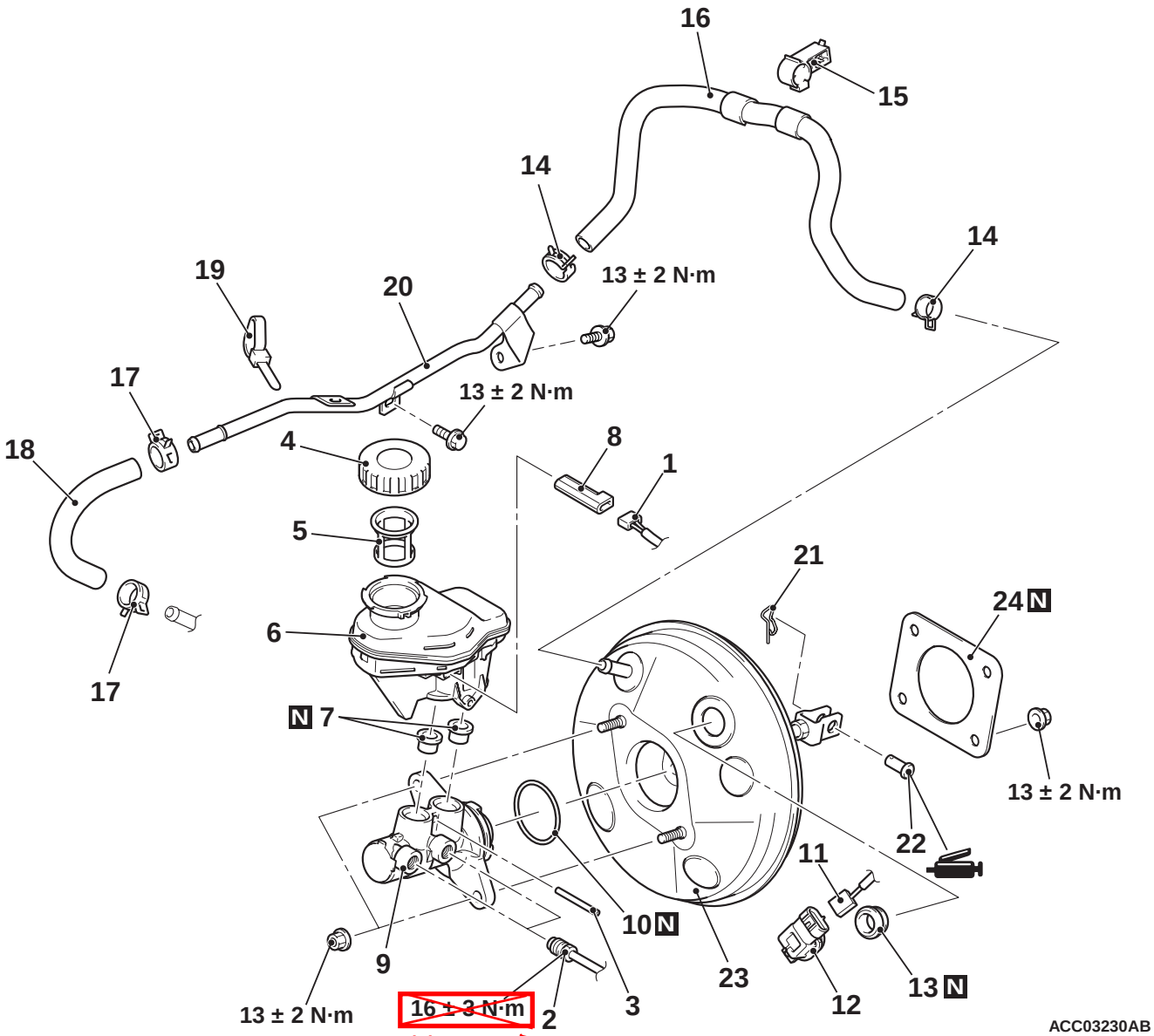

Removal steps

1. Brake fluid level switch connector
2. Brake pipe connection
3. Pin

Removal steps (Continued)

4. Reservoir cap
5. Reservoir filter
6. Reservoir assembly

REMOVAL AND INSTALLATION

M1351003703257

<RHD>

⚠ CAUTION

The master cylinder cannot be disassembled. Be careful not to remove the primary piston.

Pre-removal Operation	Post-installation Operation
• Brake Fluid Draining • Air cleaner assembly Removal (Refer to GROUP 15 – Air cleaner).	• Air cleaner assembly Installation (Refer to GROUP 15 – Air cleaner). • Brake Fluid Supplying and Air Bleeding • Brake Pedal Adjustment

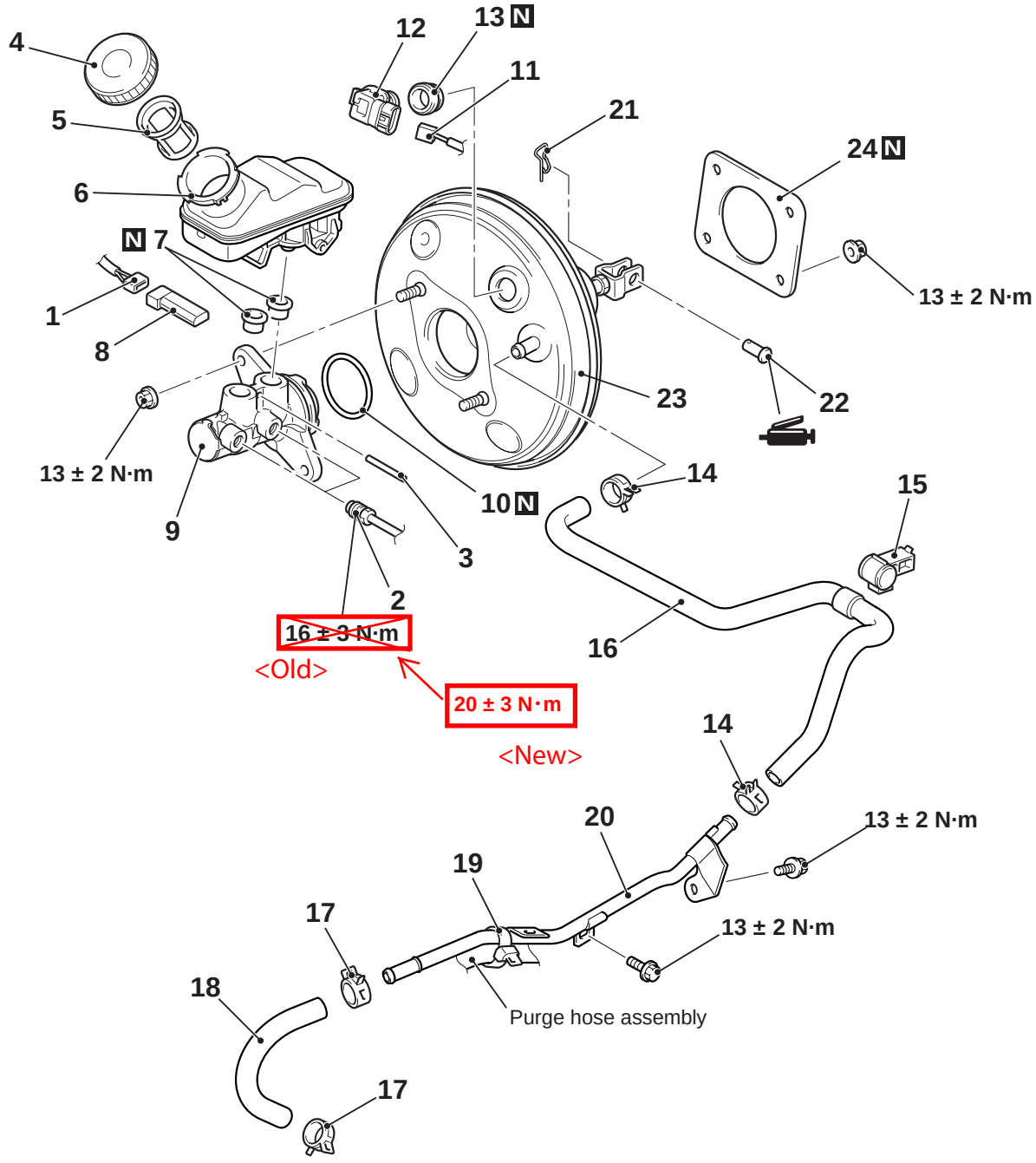

ACC03274AC

Attached sheet 6

HYDRAULIC UNIT

REMOVAL AND INSTALLATION

M1352008601230

NOTE: The ABS-ECU is integrated in the hydraulic unit.

Pre-removal Operation	Post-installation Operation
• Brake Fluid Draining	• Brake Fluid Filling • Brake Line Bleeding (Refer to GROUP 35A, On-vehicle Service – Bleeding .) • Hydraulic Unit Check

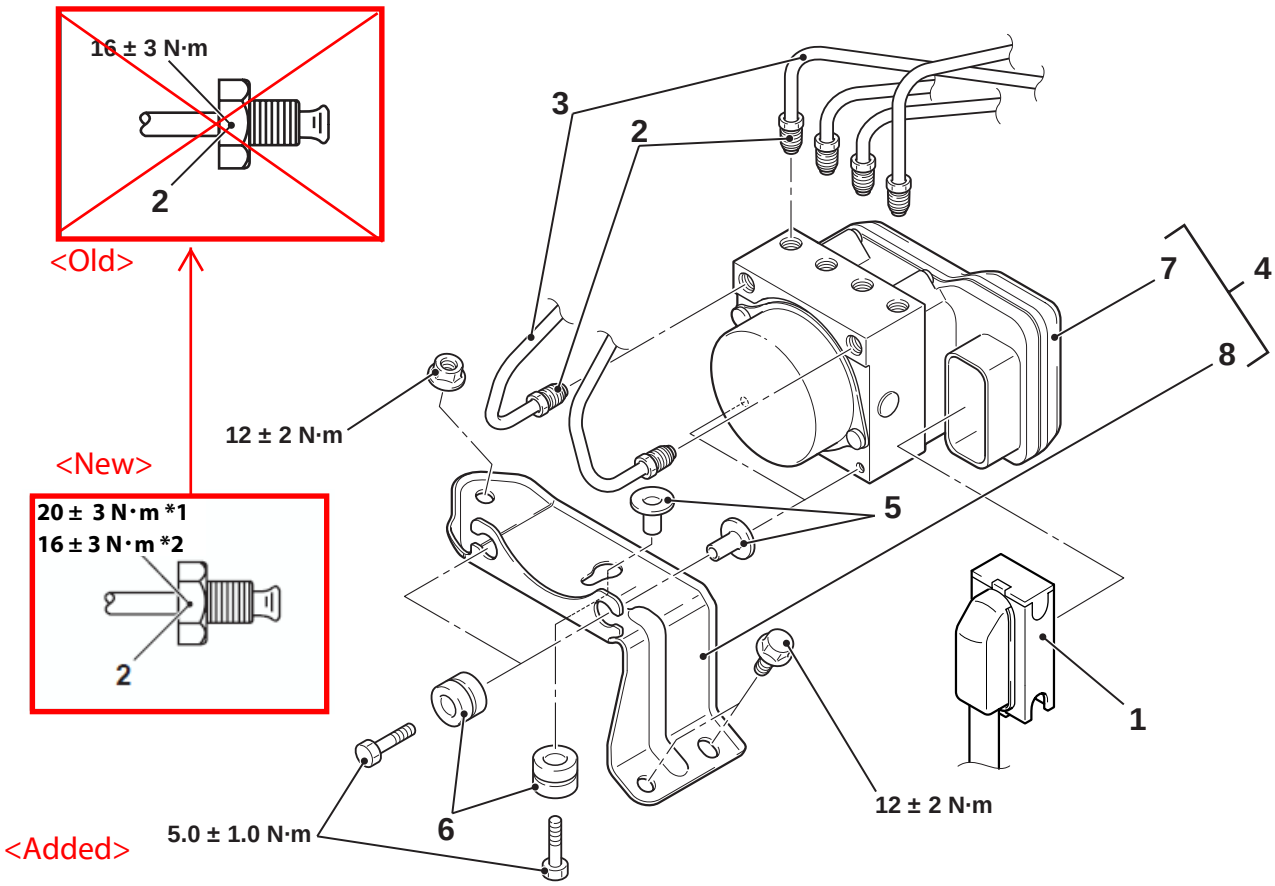

*1 : Master cylinder (primary, secondary) side <Width across flat: 12 mm>
*2 : Front brake (R/LH) side, rear brake(R/LH) side <Width across flat: 10 mm>

ACB03404 AB

Removal steps

1. Harness connector
>>A<< 2. Brake pipe and hydraulic unit assembly connection
3. Brake pipe
4. Hydraulic unit assembly and hydraulic unit bracket assembly
5. Collar
6. Insulator
<<A>> 7. Hydraulic unit assembly (integrated with ABS-ECU)
8. Hydraulic unit bracket assembly

REMOVAL SERVICE POINT

<<A>> HYDRAULIC UNIT ASSEMBLY (INTEGRATED WITH ABS-ECU) REMOVAL

⚠ CAUTION

- **Be careful when removing the hydraulic unit because it is heavy.**
- **Never loosen the nuts and the bolts because the hydraulic unit cannot be disassembled.**
- **Do not drop or shock the hydraulic unit.**
- **Do not turn the hydraulic unit upside down or lay down the unit because the inner air becomes difficult to be bled.**

Attached sheet 7

14.Select and run "SAS calibration."
15.Check whether the ASC-ECU-related diagnosis code is stored.
16.Erase the diagnosis code.

NOTE: Erase the diagnosis code C1394.

17.Before removing M.U.T.-III from the vehicle, turn the ignition key to the LOCK (OFF) position.

HYDRAULIC UNIT

REMOVAL AND INSTALLATION

M1355005600947

NOTE: ASC-ECU is located in the hydraulic unit.

⚠ CAUTION

When the hydraulic unit (integrated with ASC-ECU) is replaced, after turning the ignition switch ON or OFF (vehicle information from ETACS-ECU is registered), always carry out the calibration of steering wheel sensor and G and yaw rate sensor. (Refer to and .)

Pre-removal operation	Post-installation operation
• Brake fluid draining.	• Brake fluid refilling and air bleeding (Refer to GROUP 35A – On-vehicle Service, Bleeding). • Hydraulic unit check

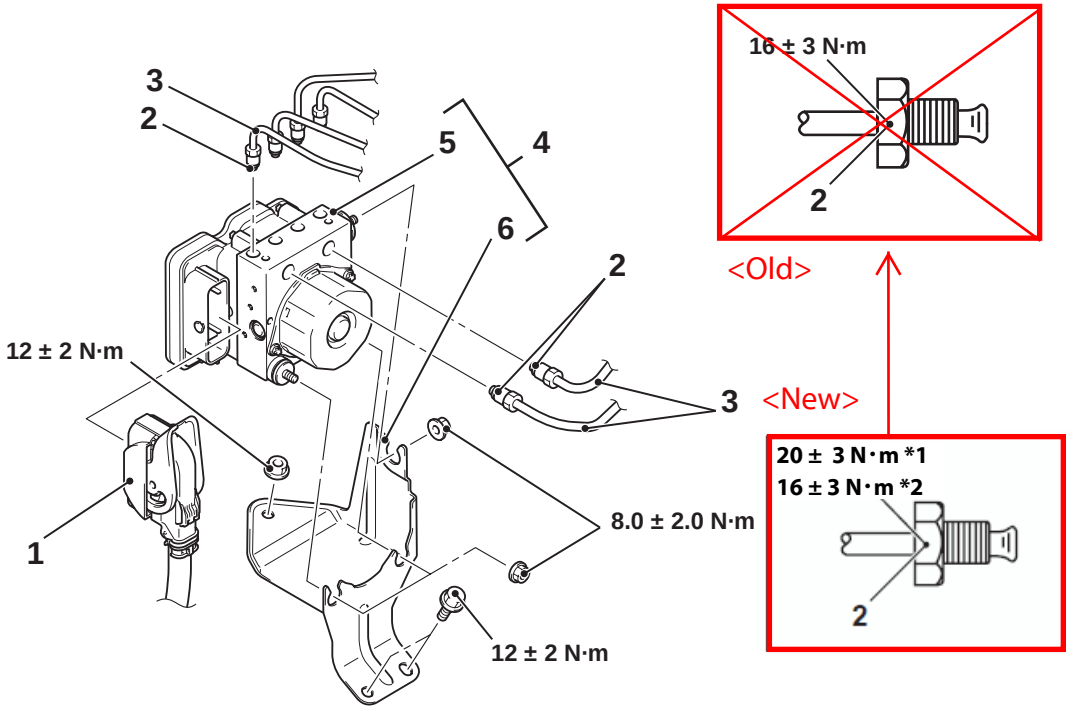

*1 : Master cylinder (primary, secondary) side <Width across flat: 12 mm>
*2 : Front brake (R/LH) side, rear brake(R/LH) side <Width across flat: 10 mm>

ACC01040AB

Removal steps

>>A<<
1. ASC-ECU harness connector
2. Brake tube connection
3. Brake tube

<<A>>

Removal steps (Continued)

4. Hydraulic unit (ASC-ECU) and hydraulic unit bracket
5. Hydraulic unit (ASC-ECU)
6. Hydraulic unit bracket assembly

Attached sheet 8

MASTER CYLINDER ASSEMBLY AND BRAKE BOOSTER ASSEMBLY

REMOVAL AND INSTALLATION

M1351003703354

⚠ CAUTION

The master cylinder cannot be disassembled. Be careful not to remove the primary piston.

Pre-removal Operation	Post-installation Operation
• Brake Fluid Draining • Battery Removal (Refer to GROUP 54A – Battery).	• Battery Installation (Refer to GROUP 54A – Battery). • Brake Fluid Supplying and Air Bleeding (Refer to). • Brake Pedal Adjustment

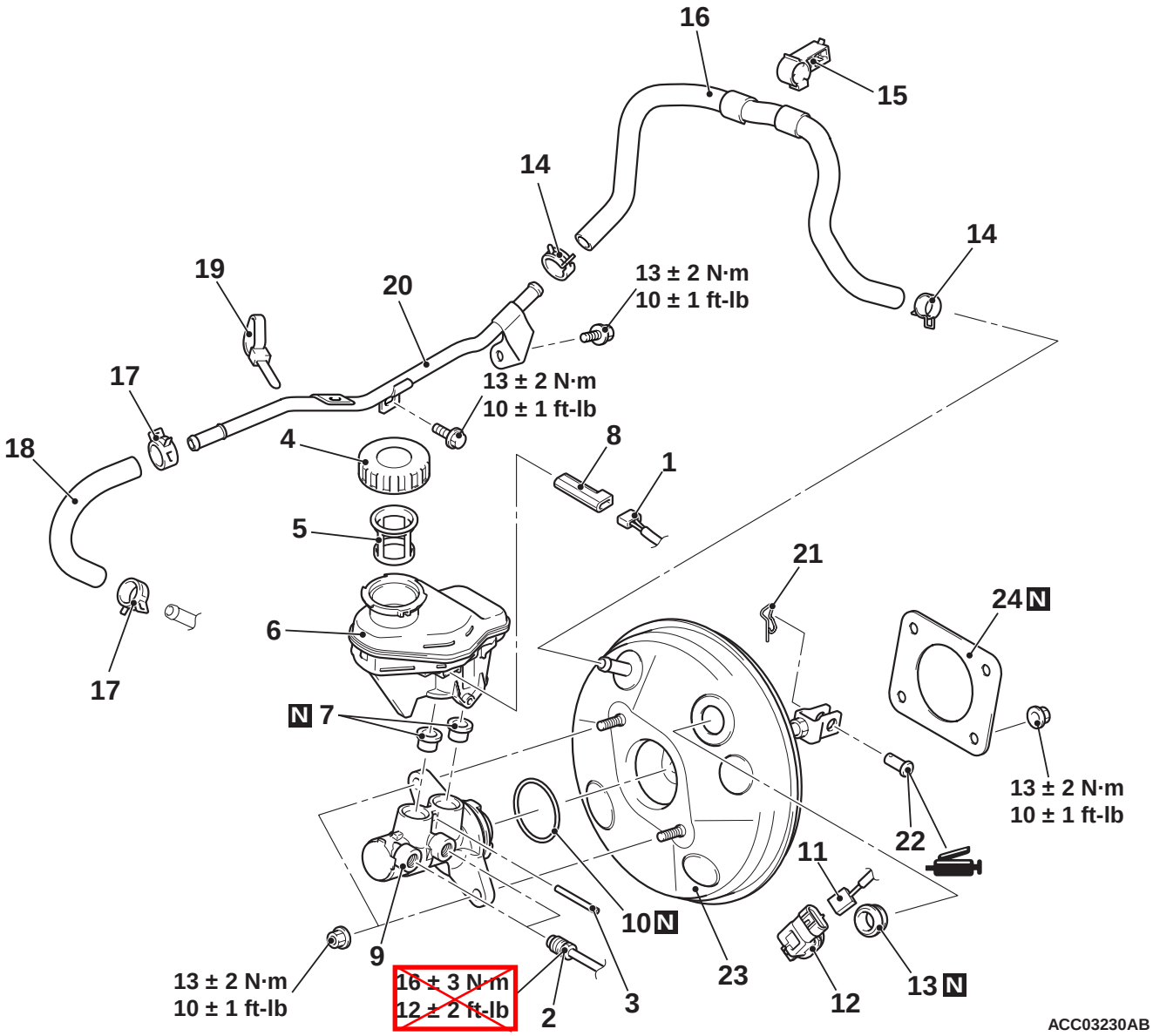

Removal steps

1. Brake fluid level switch connector
2. Brake pipe connection
3. Pin
4. Reservoir cap
5. Reservoir filter

<Old>

20 ± 3 N·m
15 ± 2 ft·lb

<New>

Removal steps (Continued)

6. Reservoir assembly
7. Reservoir seal
8. Brake fluid level switch
9. Brake master cylinder assembly
10. O-ring
11. Brake vacuum sensor connector

TSB Revision

Attached sheet 9

Tester connection	When the ASC OFF switch is released (Not being operated)	When the ASC OFF switch is pressed
2 – 5	Open circuit	Continuity exists (2 ohms or less)
3 – 4	Continuity exists (2 ohms or less)	Continuity exists (2 ohms or less)

HYDRAULIC UNIT

REMOVAL AND INSTALLATION

M1355005600947

NOTE: ASC-ECU is located in the hydraulic unit.

⚠ CAUTION

When the hydraulic unit (integrated with ASC-ECU) is replaced, after turning the ignition switch ON or OFF (vehicle information from ETACS-ECU is registered), always carry out the calibration of steering wheel sensor and G and yaw rate sensor.

Pre-removal operation	Post-installation operation
• Brake fluid draining.	• Brake fluid refilling and air bleeding (Refer to GROUP 35A – On-vehicle Service, Bleeding). • Hydraulic unit check

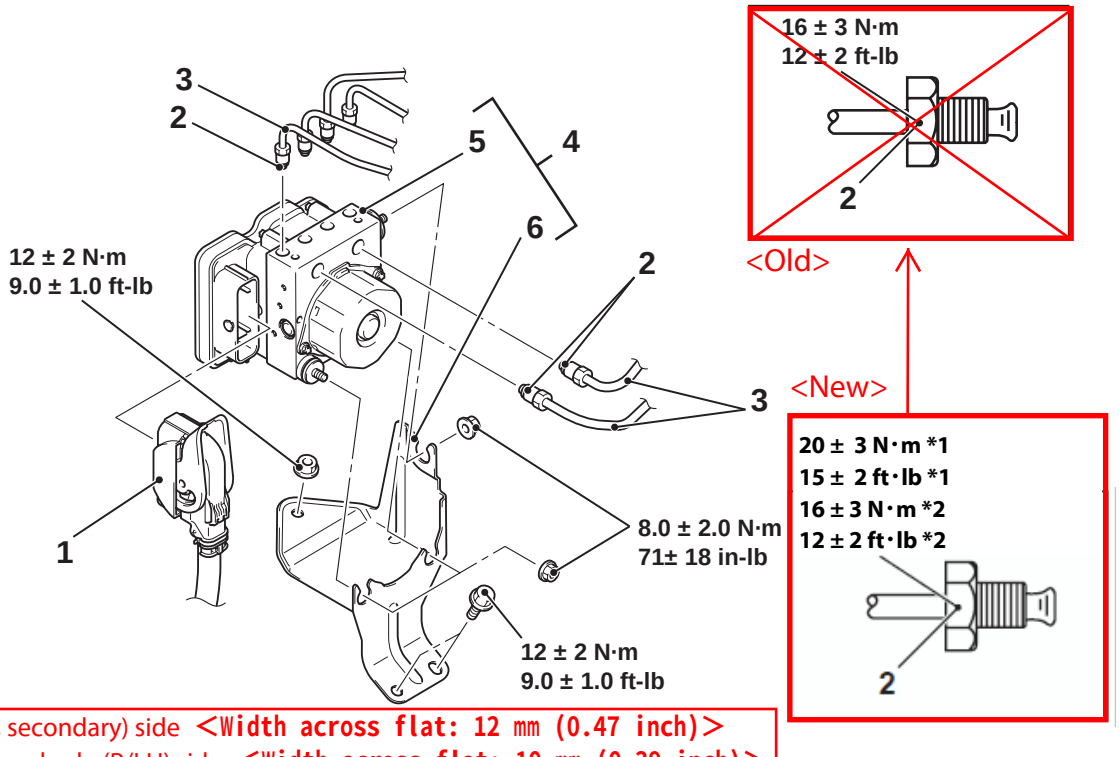

*1 : Master cylinder (primary, secondary) side <Width across flat: 12 mm (0.47 inch)>
*2 : Front brake (R/LH) side, rear brake(R/LH) side <Width across flat: 10 mm (0.39 inch)>

ACC01040AB

Removal steps

1. ASC-ECU harness connector
>>A<< 2. Brake tube connection
3. Brake tube

Removal steps (Continued)

<<A>> 4. Hydraulic unit (ASC-ECU) and hydraulic unit bracket
5. Hydraulic unit (ASC-ECU)
6. Hydraulic unit bracket assembly

TSB Revision