SERVICE BULLETIN

MITSUBISHI MOTORS

GLOBAL AFTER SALES OFFICE, MITSUBISHI MOTORS CORPORATION

PURPOSE : CHANGE	ISSUE NO. : MSB-14EXML35-002	DATE : 2014-07-30
SUBJECT : REAR WHEEL SPEED SENSOR AND BRAKE HOSE		<DESTINATION/MODEL> As per attached sheet 1 <M/Y> 13-14
GROUP : SERVICE BRAKE(Gr:35)		SPACE STAR/MIRAGE/ ATTRAGE

1. Description :

Please refer to the attached document for the information about the change of mention in the applicable service manual.(The rear wheel sensor and brake hose are changed for the improvement of the reliability of the rear speed sensor harness)

2. Affected service manuals :

Please refer to the attached document (Attached sheet 1)

3. About the details :

Please refer to the attached document (Attached sheet 3-4)

4. Effective time :

- **For MMNA/USTP/CHILE/ARGENTINA : From the initial vehicle.(MIRAGE/ATTRAGE)**
- **For EU : From the vehicles exported from Thailand since August 2013(MIRAGE)**

  : From the initial vehicle(ATTRAGE)

- **For G.EXP/MMAL/NEW ZEALAND: From the vehicles exported from Thailand since August 2013(SPACE STAR/MIRAGE/ATTRAGE)**

Attached sheet 1

＜MMNA＞

Applicable manual	Pub. No.	Applicable title (INFO ID)	Content
2014 MIRAGE Service Manual CD-ROM	MSCD-016B-2014	WHEEL SPEED SENSOR REMOVAL AND INSTALLATION (M352-00-831-70100-01	Attached sheet 3

＜EU＞

Applicable manual	Pub. No.	Applicable title (INFO ID)	Content
2013 MIRAGE/SPACE STAR Workshop Manual CD-ROM	CA0E13E1-CD (ENG) CA0F13E1-CD (FRE) CA0G13E1-CD (GER) CA0S13E1-CD (SPA) CA0I13E1-CD (ITA)	WHEEL SPEED SENSOR REMOVAL AND INSTALLATION (M352-00-831-70100-01)	Attached sheet 4
2014 ATTRAGE Workshop Manual CD-ROM	CA1E14E1-CD (ENG) CA1F14E1-CD (FRE) CA1G14E1-CD (GER) CA1S14E1-CD (SPA) CA1I14E1-CD (ITA)	WHEEL SPEED SENSOR REMOVAL AND INSTALLATION (M352-00-831-70100-01)	Attached sheet 4

＜General Export (Except for Chile and Argentina)/GCC/ASEAN (Except for Philippines)＞

Applicable manual	Pub. No.	Applicable title (INFO ID)	Content
2013 MIRAGE/SPACE STAR Workshop Manual CD-ROM	PWFE1201R	WHEEL SPEED SENSOR REMOVAL AND INSTALLATION (M352-00-831-64800-01)	Attached sheet 4

※As for ATTRAGE for general export countries, please refer to this Service Bulletin, too.

Attached sheet 3 (1/5)

<Old>

WHEEL SPEED SENSOR

REMOVAL AND INSTALLATION

M1352008301701

⚠ CAUTION

The vehicle speed detection encoder collects any metallic particle easily, because it is magnetized. Make sure that the encoder should not collect any metallic particle. Check that there is not any trouble prior to reassembling it.

Pre-removal and post-installation operation
- Quarter Trim Lower Removal and Installation (Refer to GROUP 52A – Interior trim) <Rear wheel speed sensor>

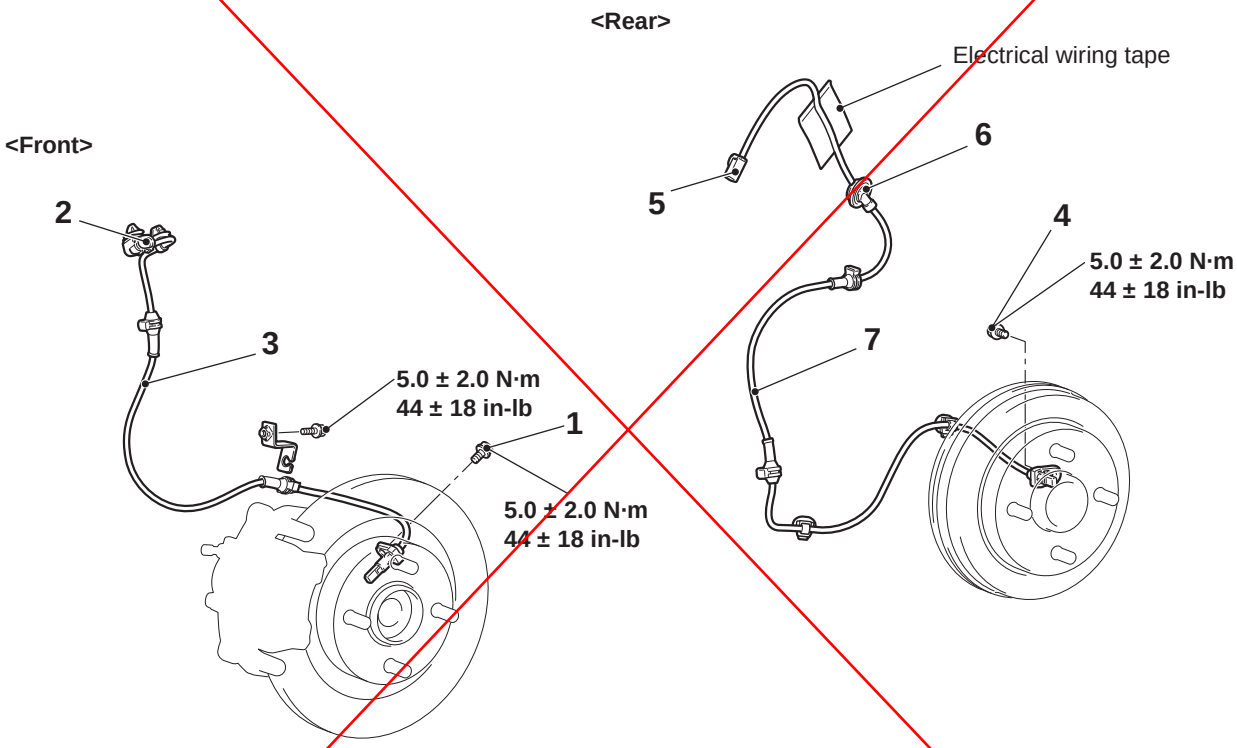

ACC01752 AB

Front wheel speed sensor removal steps
1. Bolt (front wheel speed sensor and knuckle connection)
2. Front wheel speed sensor connector
3. Front wheel speed sensor

Rear wheel speed sensor removal steps
4. Bolt (rear wheel speed sensor and trailing arm assembly connection)
5. Rear wheel speed sensor connector

>>A<< 6. Rear wheel speed sensor grommet

7. Rear wheel speed sensor

NOTE: The encoder for detecting front wheel speed is a non-disassemble part integrated with the wheel bearing.

Insert the attached sheet 3 (3/5～5/5)

TSB Revision

INSTALLATION SERVICE POINT

>>A<< REAR WHEEL SPEED SENSOR GROMMET INSTALLATION

Install the rear wheel speed sensor grommet to the quarter panel lower inner panel snugly as shown in the figure.

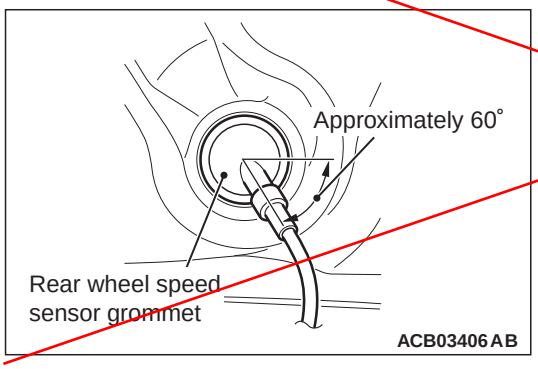

<New>

REMOVAL AND INSTALLATION

M1352008301897

⚠ CAUTION

The vehicle speed detection encoder collects any metallic particle easily, because it is magnetized. Make sure that the encoder should not collect any metallic particle. Check that there is not any trouble prior to reassembling it.

Pre-removal and post-installation operation
- Quarter Trim Lower Removal and Installation (Refer to GROUP 52A – Interior trim) <Rear wheel speed sensor>

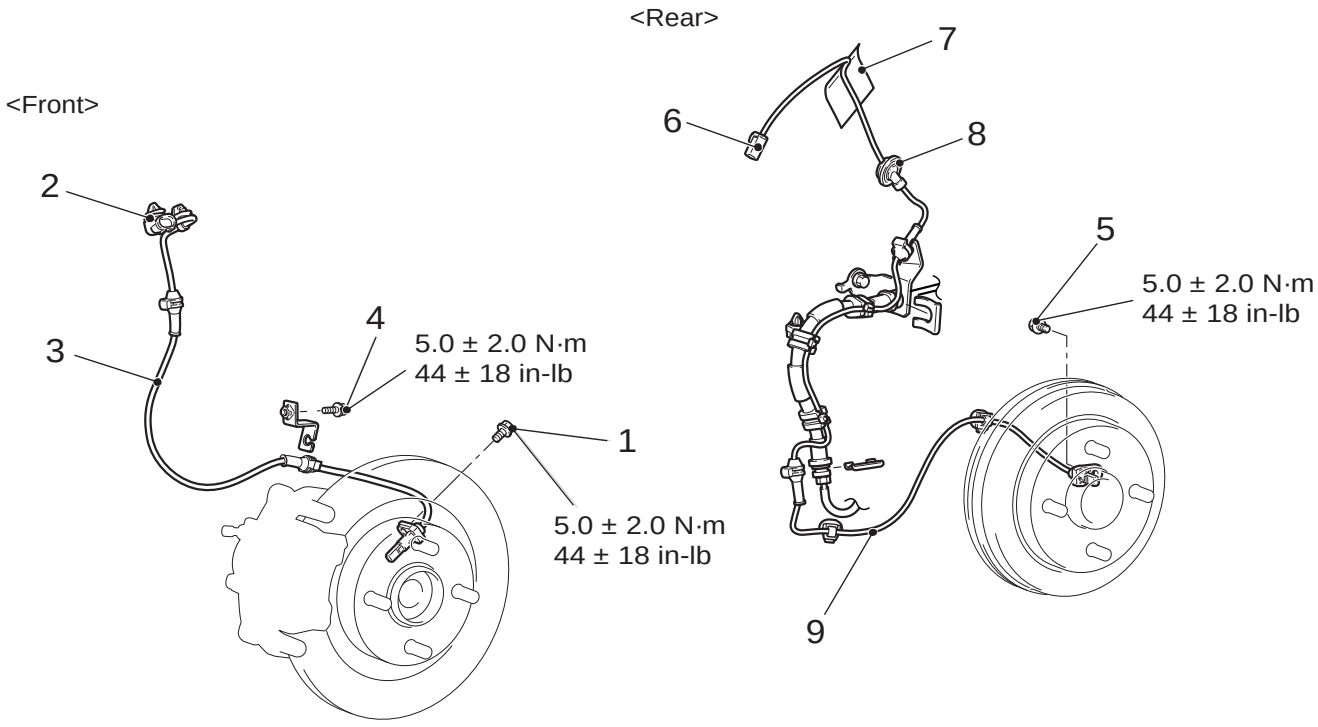

ACE02923AB

Front wheel speed sensor removal steps
1. Bolt (front wheel speed sensor and knuckle connection)
2. Front wheel speed sensor connector
3. Front wheel speed sensor
4. Sensor bracket

Rear wheel speed sensor removal steps
- Bolt (rear wheel speed sensor and trailing arm assembly connection)

5. Bolt (rear wheel speed sensor and trailing arm assembly connection)
6. rear wheel speed sensor connector
7. Electrical wiring tape

>>B<< 8. Rear wheel speed sensor grommet

<<A>> >>A<< 9. Rear wheel speed sensor

NOTE: The encoder for detecting front wheel speed is a non-disassemble part integrated with the wheel bearing.

REMOVAL SERVICE POINT

<<A>>REAR WHEEL SPEED SENSOR REMOVAL

1. Before detaching the rear wheel speed sensor from the brake hose, mark position of the rear wheel speed sensor relative to the grommet.

2. Cut off the cable band to remove the rear wheel speed sensor.

INSTALLATION SERVICE POINT

>>A<< REAR WHEEL SPEED SENSOR INSTALLATION

⚠ CAUTION

Install the wheel speed sensor so that it is located on the outside of the vehicle.

Assemble the rear wheel speed sensor to the brake hose according to the following steps.

NOTE: If a new rear wheel speed sensor is used, transfer the position mark from the old one to the new.

Symmetrical part (left side shown)

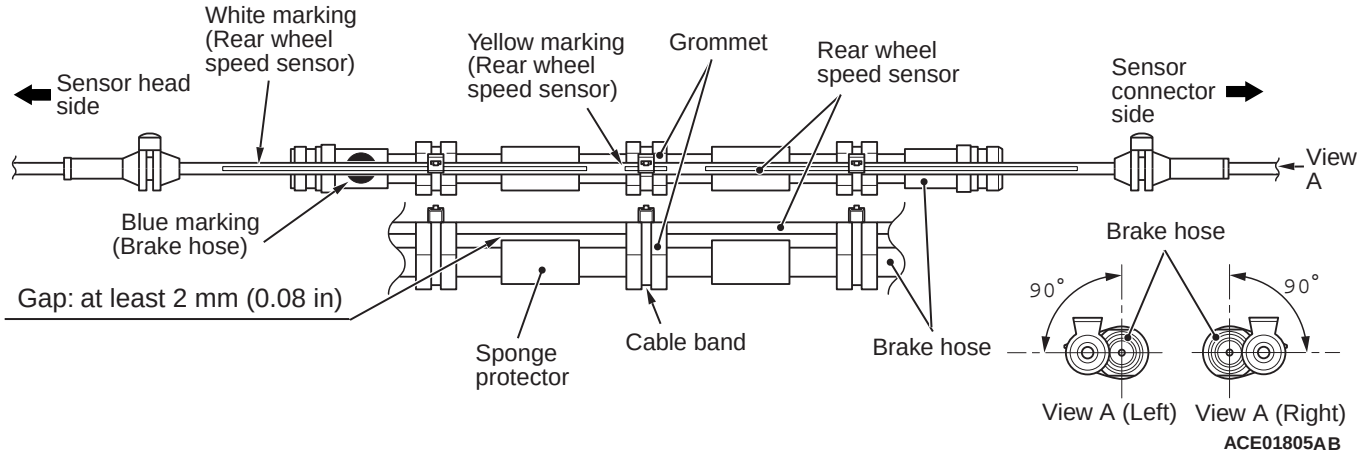

⚠ CAUTION

The head of the rear wheel speed sensor should face toward the blue marking on the brake hose.

1. Align the rear wheel speed sensor with the grommet according to the position mark. Then route the brake hose, taking care not to kink the rear wheel speed sensor wiring harness.
2. Align the end of the yellow marking on the rear wheel speed sensor with the end of the grommet (sensor head side) at the middle of the brake hose.
3. Insert the rear wheel speed sensor wiring harness into the grommets so that the yellow marking and the white line on the sensor are visible.
4. Tighten the hose and the sensor wiring harness with a cable band at the grommet at the middle of the brake hose.

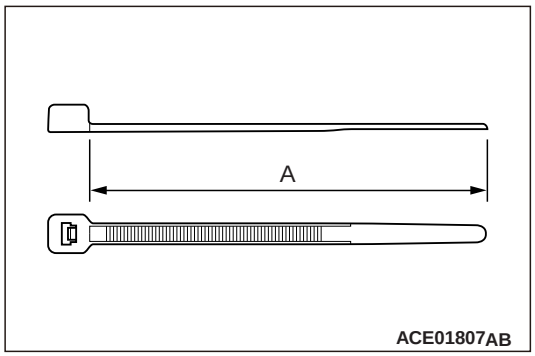

(1) Measure dimension (A) of the cable band.
(2) Assemble the cable band in the middle of the grommet.

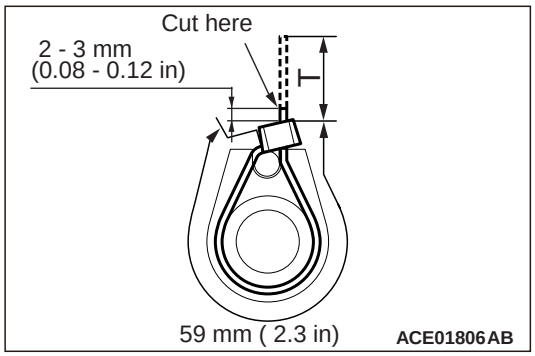

(3) Tighten the cable band so that the clamping distance (T) reaches the specified value as shown.

How to measure the clamping distance: T mm = A mm - 59 mm (2.3 inches)

(4) After the rear wheel speed sensor wiring harness is secured, cut off the end of cable band, leaving 2 - 3 mm (0.08 - 0.12 inch).

5. Avoid slack or drooping between the right and left grommets, and then tighten the wiring harness with a cable band.

   NOTE: Repeat steps (3) and (4) for three cable band tightening positions.

6. By pulling on the rear wheel speed sensor wiring harness, check that it is not displaced from the grommets.
7. Check that the gap between the sponge protector on the brake hose and the rear wheel speed sensor wiring harness is at least 2 mm (0.08 inch).

>>B<< REAR WHEEL SPEED SENSOR GROMMET INSTALLATION

Install the rear wheel speed sensor grommet to the quarter panel lower inner panel snugly as shown in the figure.

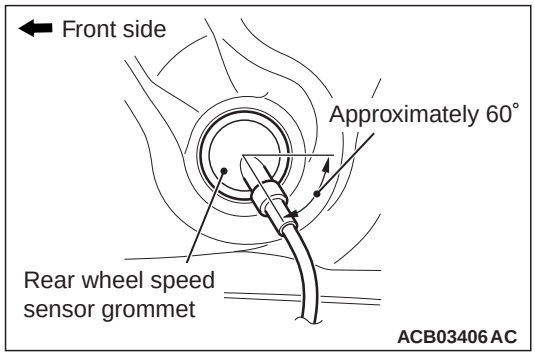

<Old>

WHEEL SPEED SENSOR

REMOVAL AND INSTALLATION

M1352008301701

⚠ CAUTION

The vehicle speed detection encoder collects any metallic particle easily, because it is magnetised. Make sure that the encoder should not collect any metallic particle. Check that there is not any trouble prior to reassembling it.

Pre-removal and post-installation operation
- Quarter Trim Lower Removal and Installation (Refer to GROUP 52A – Interior trim) <Rear wheel speed sensor>

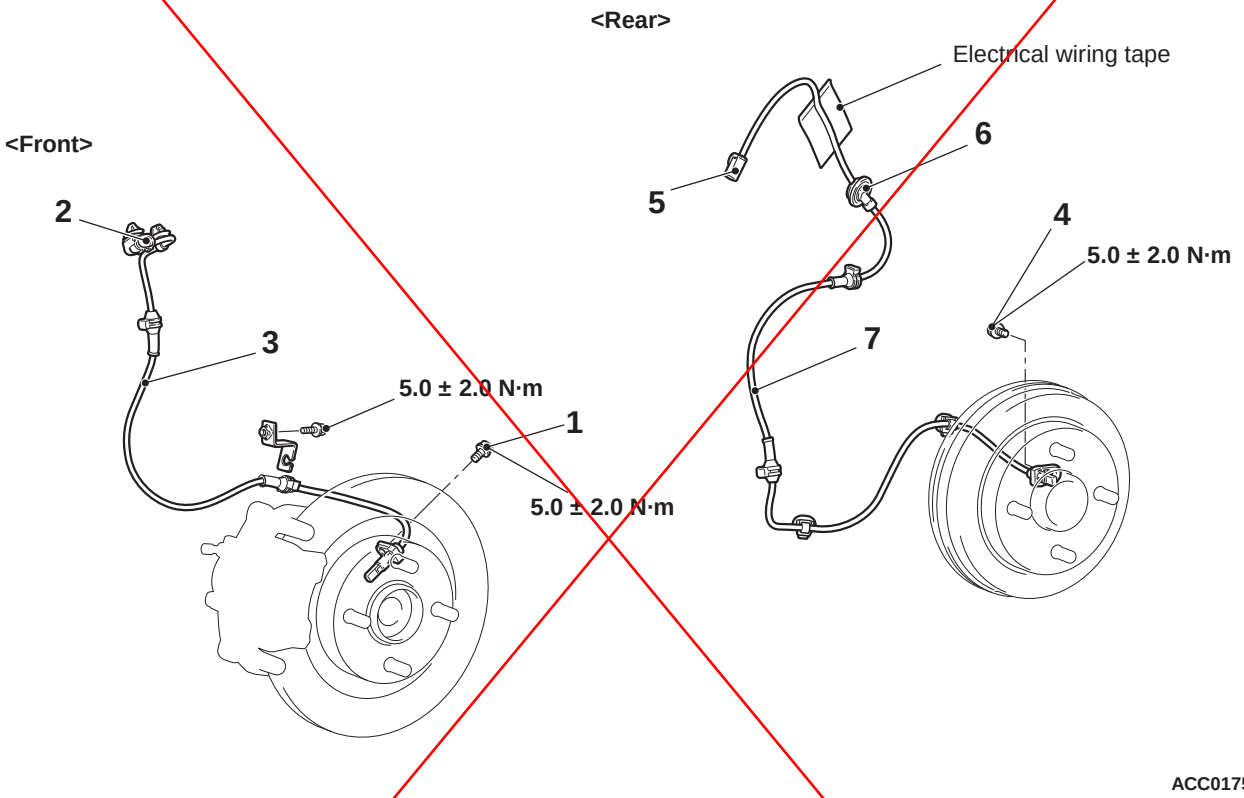

ACC01752 AB

Front wheel speed sensor removal steps
1. Bolt (front wheel speed sensor and knuckle connection)
2. Front wheel speed sensor connector
3. Front wheel speed sensor

Rear wheel speed sensor removal steps
4. Bolt (rear wheel speed sensor and trailing arm assembly connection)
5. Rear wheel speed sensor connector

>>A<< 6. Rear wheel speed sensor grommet

7. Rear wheel speed sensor

NOTE: The encoder for detecting front wheel speed is a non-disassemble part integrated with the wheel bearing.

INSTALLATION SERVICE POINT

>>A<< REAR WHEEL SPEED SENSOR GROMMET INSTALLATION

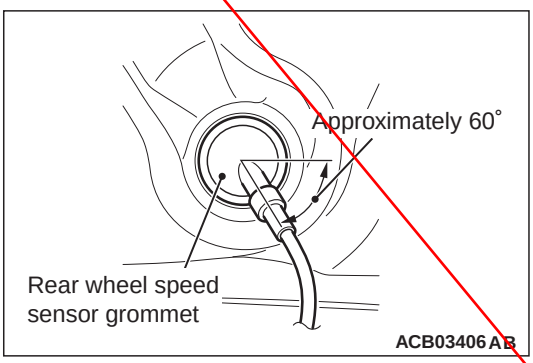

Install the rear wheel speed sensor grommet to the quarter panel lower inner panel snugly as shown in the figure.

Insert the attached sheet 4 (3/5～5/5)

>>B<< REAR WHEEL SPEED SENSOR GROMMET INSTALLATION

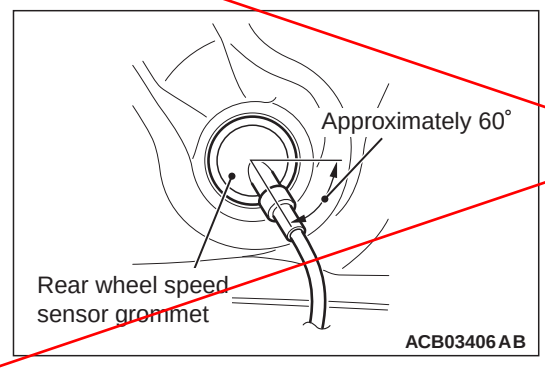

Install the rear wheel speed sensor grommet to the quarter panel lower inner panel snugly as shown in the figure.

<New>

REMOVAL AND INSTALLATION

M1352008301897

⚠ CAUTION

The vehicle speed detection encoder collects any metallic particle easily, because it is magnetized. Make sure that the encoder should not collect any metallic particle. Check that there is not any trouble prior to reassembling it.

Pre-removal and post-installation operation

- Quarter Trim Lower Removal and Installation (Refer to GROUP 52A – Interior trim) <Rear wheel speed sensor>

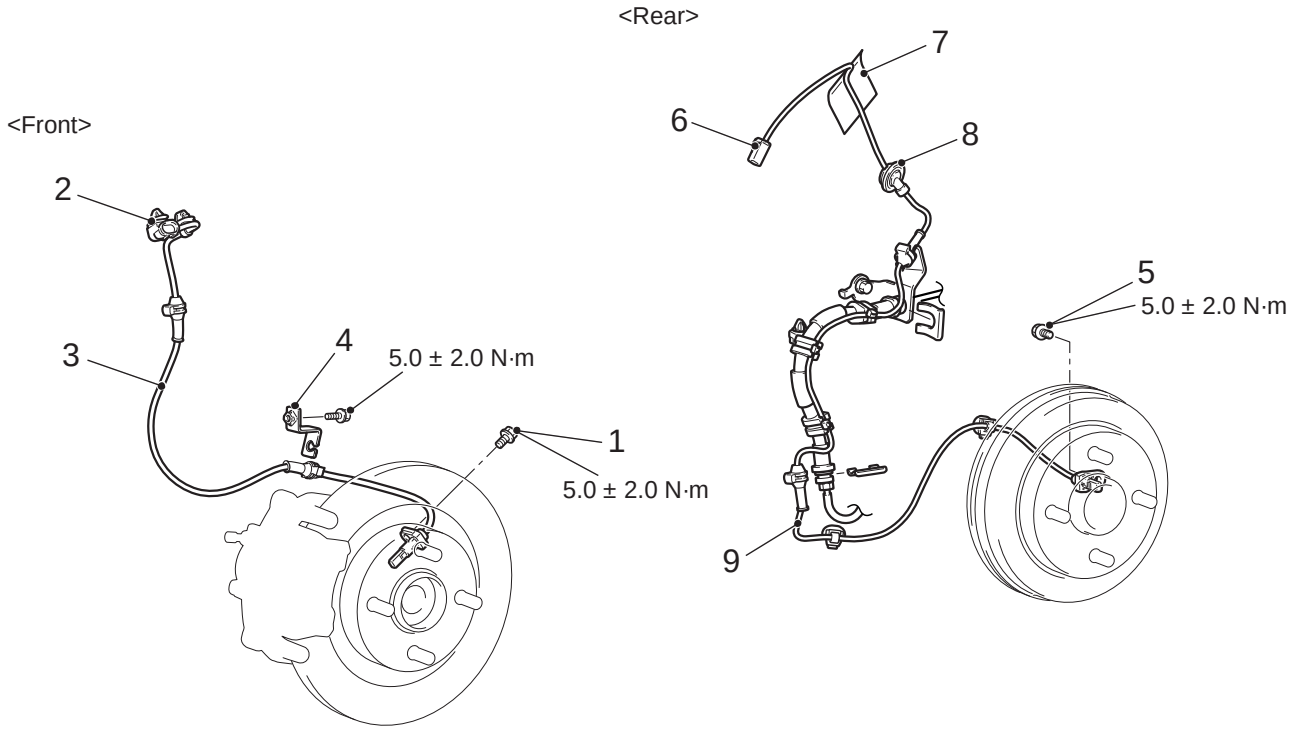

ACE02923 AB

Front wheel speed sensor removal steps

1. Bolt (front wheel speed sensor and knuckle connection)
2. Front wheel speed sensor connector
3. Front wheel speed sensor
4. Sensor bracket

Rear wheel speed sensor removal steps

- Bolt (rear wheel speed sensor and trailing arm assembly connection)

5. Bolt (rear wheel speed sensor and trailing arm assembly connection)
6. rear wheel speed sensor connector
7. Electrical wiring tape

Rear wheel speed sensor removal steps (Continued)

>>**B**<< 8. Rear wheel speed sensor grommet

<<**A**>> >>**A**<< 9. Rear wheel speed sensor

NOTE: The encoder for detecting front wheel speed is a non-disassemble part integrated with the wheel bearing.

REMOVAL SERVICE POINT

<<A>> REAR WHEEL SPEED SENSOR REMOVAL

1. Before detaching the rear wheel speed sensor from the brake hose, mark position of the rear wheel speed sensor relative to the grommet.
2. Cut off the cable band to remove the rear wheel speed sensor.

INSTALLATION SERVICE POINT

>>A<< REAR WHEEL SPEED SENSOR INSTALLATION

⚠ CAUTION

Install the wheel speed sensor so that it is located on the outside of the vehicle.

Assemble the rear wheel speed sensor to the brake hose according to the following steps.

NOTE: If a new rear wheel speed sensor is used, transfer the position mark from the old one to the new.

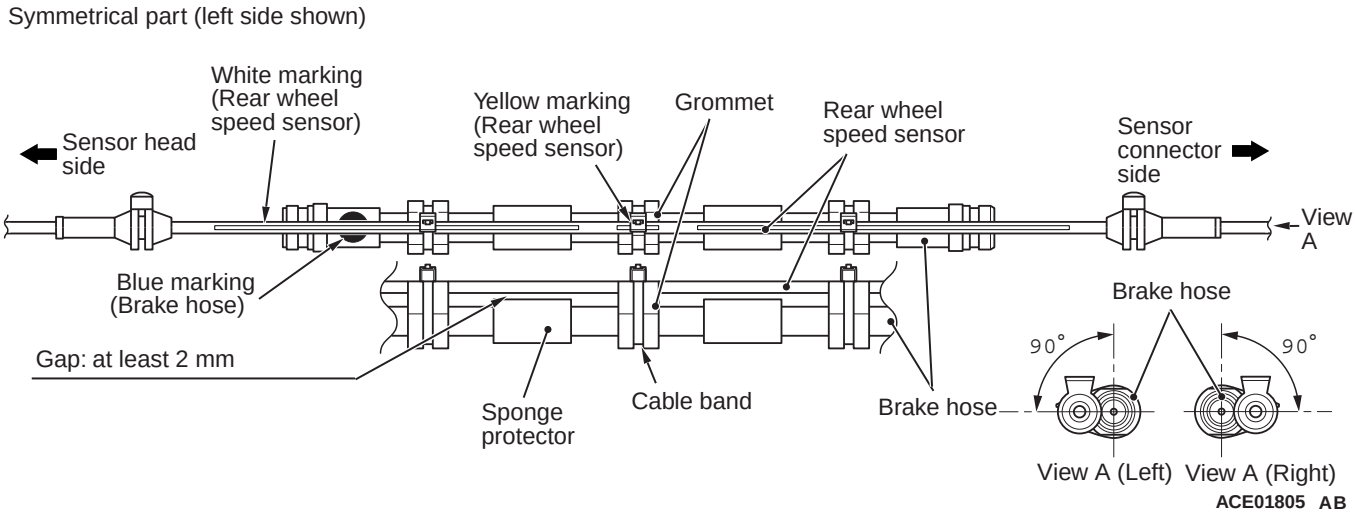

⚠ CAUTION

The head of the rear wheel speed sensor should face towards the blue marking on the brake hose.

1. Align the rear wheel speed sensor with the grommet according to the position mark. Then route the brake hose, taking care not to kink the rear wheel speed sensor wiring harness.
2. Align the end of the yellow marking on the rear wheel speed sensor with the end of the grommet (sensor head side) in the middle of the brake hose.
3. Insert the rear wheel speed sensor wiring harness into the grommets so that the yellow marking and the white line on the sensor are visible.
4. Tighten the hose and the sensor wiring harness with a cable band at the grommet in the middle of the brake hose.

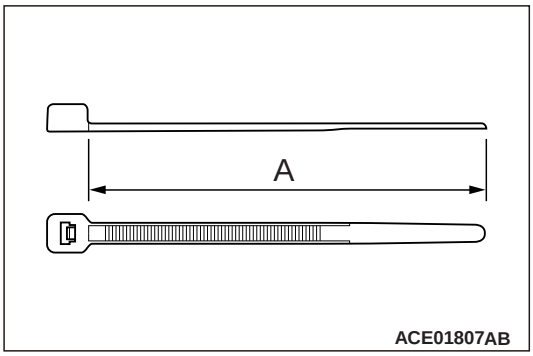

(1) Measure dimension (A) of the cable band.

(2) Assemble the cable band in the middle of the grommet.

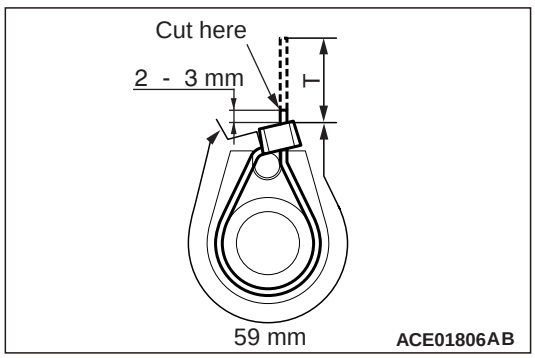

(3) Tighten the cable band so that the clamping distance (T) reaches the specified value as shown.

How to measure the clamping distance: T mm = A mm - 59 mm

(4) After the rear wheel speed sensor wiring harness is secured, cut off the end of cable band, leaving 2 - 3 mm.

5. Avoid slack or drooping between the right and left grommets, and then tighten the wiring harness with a cable band.

NOTE: Repeat steps (3) and (4) for three cable band tightening positions.

6. By pulling on the rear wheel speed sensor wiring harness, check that it is not displaced from the grommets.
7. Check that the gap between the sponge protector on the brake hose and the rear wheel speed sensor wiring harness is at least 2 mm.

>>B<< REAR WHEEL SPEED SENSOR GROMMET INSTALLATION

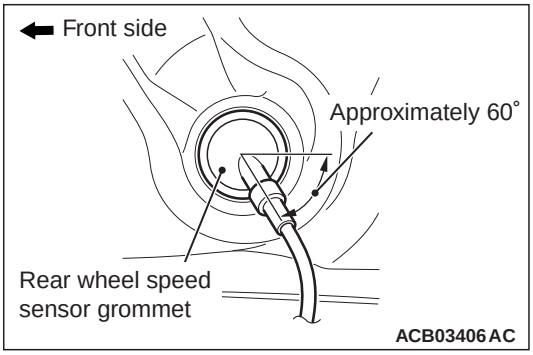

Install the rear wheel speed sensor grommet to the quarter panel lower inner panel snugly as shown in the figure.