SERVICE BULLETIN

MITSUBISHI MOTORS

GLOBAL AFTER SALES OFFICE, MITSUBISHI MOTORS CORPORATION

PURPOSE : CHANGE	ISSUE NO. : MSB-14EXML42-001	DATE : 2014-04-08
SUBJECT : ADDITION OF SEALANT APPLICATION		<DESTINATION/MODEL> (AS PER ATTACHED SHEET 1) <M/Y> 13-14
GROUP : BODY(Gr:42)		OUTLANDER/OUTLANDER PHEV(GF0W)

1. Description :

Please refer to the attached document for the information about the change of mention in the applicable service manual.

2. Affected service manuals :

Please refer to the attached document (Attached sheet 1)

3. About the details :

Please refer to the attached document (Attached sheet 3-5)
(Due to the shape change of the front pillar reinforcement lower, sealant application points are added.)

4. Effective time :

- **For the left side parts : From the vehicles produced in early April 2014**
- **For the right side parts : From the vehicles produced in middle March 2014**

【For overseas market】

Destination	Applicable manual	Pub. No.	Applicable title (INFO ID)	Contents
EU/ RUSSIA	2013 OUTLANDER Workshop Manual	CGFE13E1-CD(ENG) CGFF13E1-CD(FRE) CGFG13E1-CD(GER) CGFS13E1-CD(SPA) CGFI13E1-CD(ITA) RUSSIA:N/A	FRONT PILLAR (M030-00-502-11300-01)	Attached sheet 3
	2014 OUTLANDER/OUTLANDER PHEV Workshop Manual	CGFE14E2-CD(ENG) CGFF14E2-CD(FRE) CGFG14E2-CD(GER) CGFS14E2-CD(SPA) CGFI14E2-CD(ITA) RUSSIA:N/A	FRONT PILLAR (M030-00-502-13500-01)	
MMAL/ NZ/ CHINA	2013 OUTLANDER Workshop Manual	AU900304 (AUSTRALIA), DRAFT (NEW ZEALAND, CHINA)	FRONT PILLAR (M030-00-502-11300-01)	
EXP/ GCC/ BRAZIL	2014 OUTLANDER Workshop Manual	PWRE1303R (ENG) PWRS1304R (SPA) BRAZIL:DRAFT	FRONT PILLAR (M030-00-502-11301-01)	
MMNA	2013 OUTLANDER Service Manual	MSCD-007B-2013	FRONT PILLAR (M030-00-502-17900-01)	Attached sheet 4
			FRONT PILLAR (PARTIAL REPLACEMENT) (M030-00-120-14200-01)	Attached sheet 5

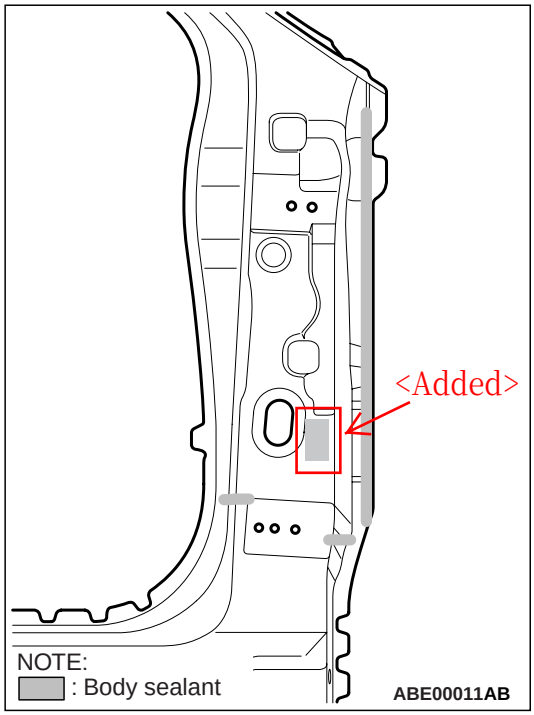

4. Prior to assembling the new front outer pillar parts, apply the body sealant to the area shown in the figure.

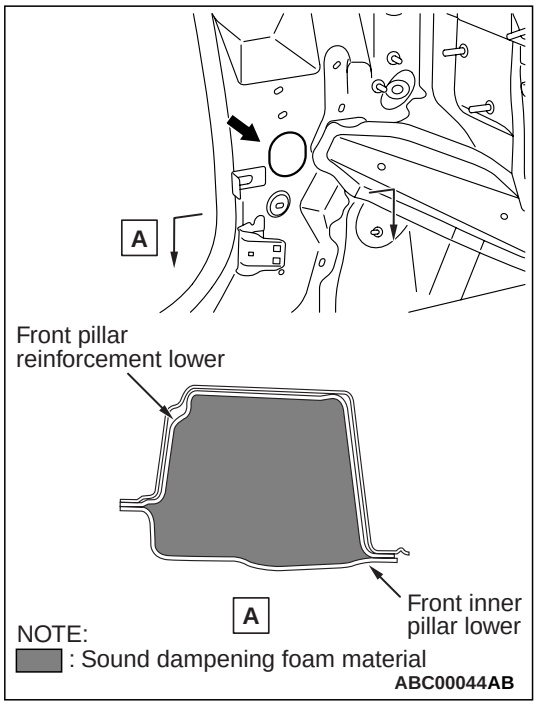

5. After installing the front outer pillar, seal the hole and flange with bolt and sheet-metal tape, and then fill the hole with foam materials as shown in the figure.

   Sound dampening foam material: 3M ATD Part No.08463

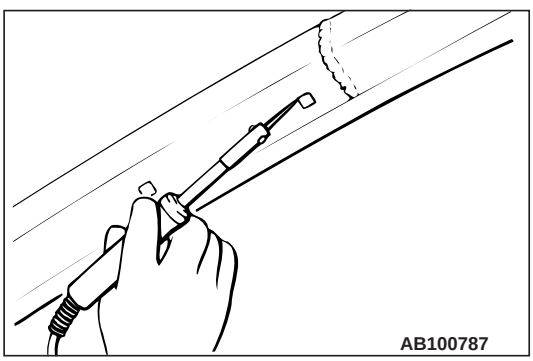

6. Wait 2 hours after filling the sound dampening foam material to remove the bolt and aluminium tape, then melt the sound dampening foam material with a soldering gun so a clip, etc. can thoroughly be inserted in the hole filled with sound dampening foam material.

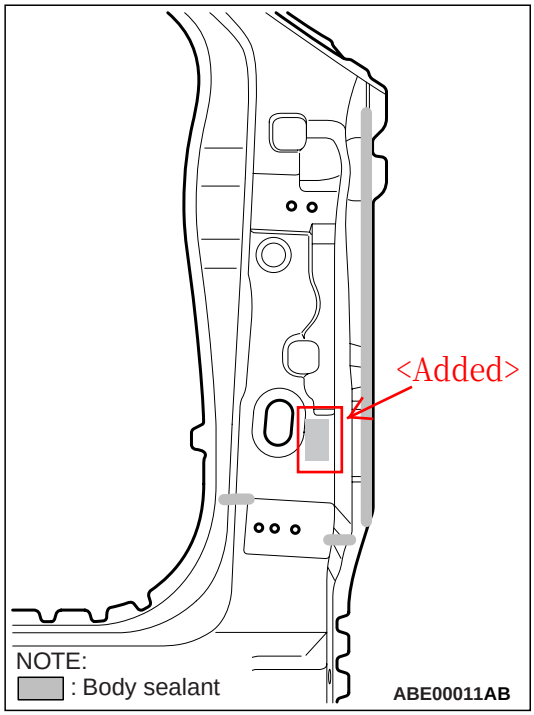

4. Prior to assembling the new front outer pillar parts, apply the body sealant to the area shown in the figure.

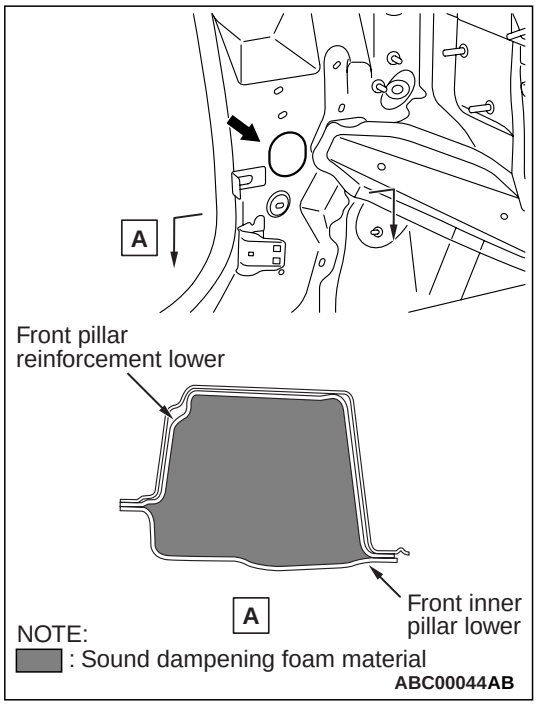

5. After installing the front outer pillar, seal the hole and flange with bolt and sheet-metal tape, and then fill the hole with foam materials as shown in the figure.

   Sound dampening foam material: 3M™ AAD Part No.08463

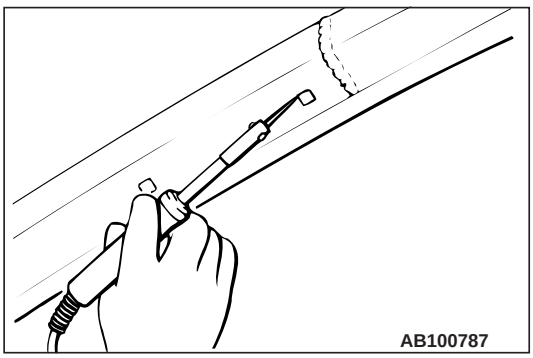

6. Wait 2 hours after filling the sound dampening foam material to remove the bolt and aluminum tape, then melt the sound dampening foam material with a soldering gun so a clip, etc. can thoroughly be inserted in the hole filled with sound dampening foam material.

INSTALLATION

1. To reinforce the strength in the front pillar cut area, cut the side outer panel 50 mm (1.97 inches) above the cut area.
2. Install the new front lower inner pillar.

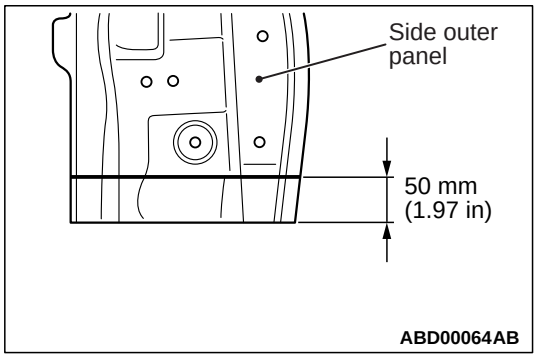

3. When installing the new side sill reinforcement parts, remove the side sill reinforcement outer rear and the side sill bulkhead A from the side sill reinforcement.

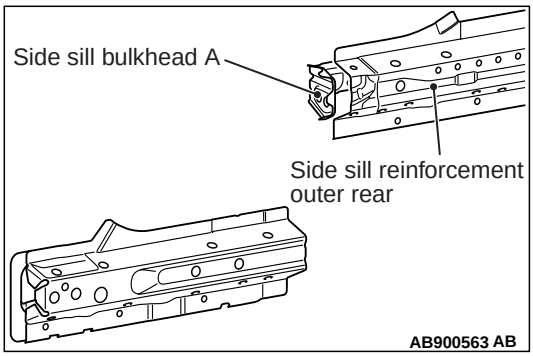

4. When installing the new front pillar reinforcement lower inner parts, in order to prevent the dripping of sound dampening foam material to be filled into the front pillar in the next process, install the front pillar silencer lower to the front pillar reinforcement lower inner, and then apply the butyl-tape to close the hole and gap of the front pillar silencer lower.

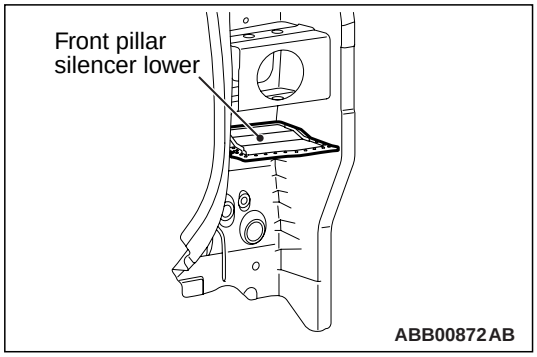

5. Prior to assembling the new front outer pillar parts, apply the body sealant to the area shown in the figure.

