SERVICE BULLETIN

MITSUBISHI MOTORS

GLOBAL AFTER SALES OFFICE, MITSUBISHI MOTORS CORPORATION

PURPOSE : CORRECTION	ISSUE NO. : MSB-14EXML42-502	DATE : 2014-02-10
SUBJECT : TIGHTENING TORQUE OF ERRORS IN THE TAILGATE		<DESTINATION/MODEL> (AS PER ATTACHED SHEETR 1) <M/Y> 13-14
GROUP : BODY(Gr;42A)		OUTLANDER/OUTLANDER PHEV(GF0W)

1. Description :

Please refer to the attached document for the correction of the error in writing existing in the applicable service manual.

2. Affected service manuals :

Please refer to the attached document (Attached sheet 1)

3. About the details :

Please refer to the attached document (Attached sheet 4-7)

【For overseas market】 Attached sheet 1

Destination	Applicable manual	Pub. No.	Applicable title (INFO ID)	Contents
MMNA	2014 OUTLANDER Service Manual	MMNA: MSCD-007B-2014	Liftgate removal and installation <Vehicles without power liftgate>(M424-00-110-98500-01)	Attached sheet 4
			Liftgate removal and installation <Vehicles with power liftgate>(M424-00-110-99600-01)	Attached sheet 5
EU/RUSSIA	2013 OUTLANDER Workshop Manual	CGFE13E1-CD(ENG) CGFF13E1-CD(FRE) CGFG13E1-CD(GER) CGFS13E1-CD(SPA) CGFI13E1-CD(ITA) RUSSIA:N/A	Tailgate removal and installation <Vehicles without power tailgate> (M424-00-110-98500-01),	Attached sheet 6
			Tailgate removal and installation <Vehicles with power tailgate> (M424-00-110-99600-01)	Attached sheet 7
	2014 OUTLANDER/ OUTLANDER PHEV Workshop Manual	CGFE14E2-CD(ENG) CGFF14E2-CD(FRE) CGFG14E2-CD(GER) CGFS14E2-CD(SPA) CGFI14E2-CD(ITA) RUSSIA:N/A	Tailgate removal and installation <Vehicles without power tailgate> (M424-00-110-98500-01),	Attached sheet 6
			Tailgate removal and installation <Vehicles with power tailgate> (M424-00-110-99600-01)	Attached sheet 7
MMAL/NZ/CHINA	2013 OUTLANDER Workshop Manual	MMAL:AU900304 NZ/CHINA:DRAFT	Tailgate removal and installation <Vehicles without power tailgate> (M424-00-110-98500-01),	Attached sheet 6
			Tailgate removal and installation <Vehicles with power tailgate> (M424-00-110-99600-01)	Attached sheet 7
EXP/BRAZIL/GCC	2014 OUTLANDER Workshop Manual	PWRE1303R(ENG) PWRS1304R(SPA)	Tailgate removal and installation <Vehicles without power tailgate> (M424-00-110-98500-01),	Attached sheet 6
			Tailgate removal and installation <Vehicles with power tailgate> (M424-00-110-99600-01)	Attached sheet 7

LIFTGATE

REMOVAL AND INSTALLATION

M1424001100985

Pre-removal operation	Post-installation operation
• Liftgate trim removal (Refer to GROUP 52A – Liftgate Trim .) • Rear wiper blade assembly, rear wiper motor and rear washer hose removal (Refer to GROUP 51 – Rear Wiper and Washer .) • High-mounted stop light assembly removal (Refer to GROUP 54A – High-mounted stop light .) • Liftgate garnish removal (Refer to GROUP 51 – Liftgate Garnish .) • Liftgate window glass removal (Refer to P.42A-23.)	• Liftgate alignment (Refer to P.42A-82.) • Adjustment of Liftgate height (Refer to P.42A-83.) • Liftgate window glass installation (Refer to P.42A-23.) • Liftgate garnish installation (Refer to GROUP 51 – Liftgate Garnish .) • High-mounted stop light assembly installation (Refer to GROUP 54A – High-mounted stop light .) • Rear wiper blade assembly, rear wiper motor and rear washer hose installation (Refer to GROUP 51 – Rear wiper and washer .) • Liftgate trim installation (Refer to GROUP 52A – Liftgate Trim .)

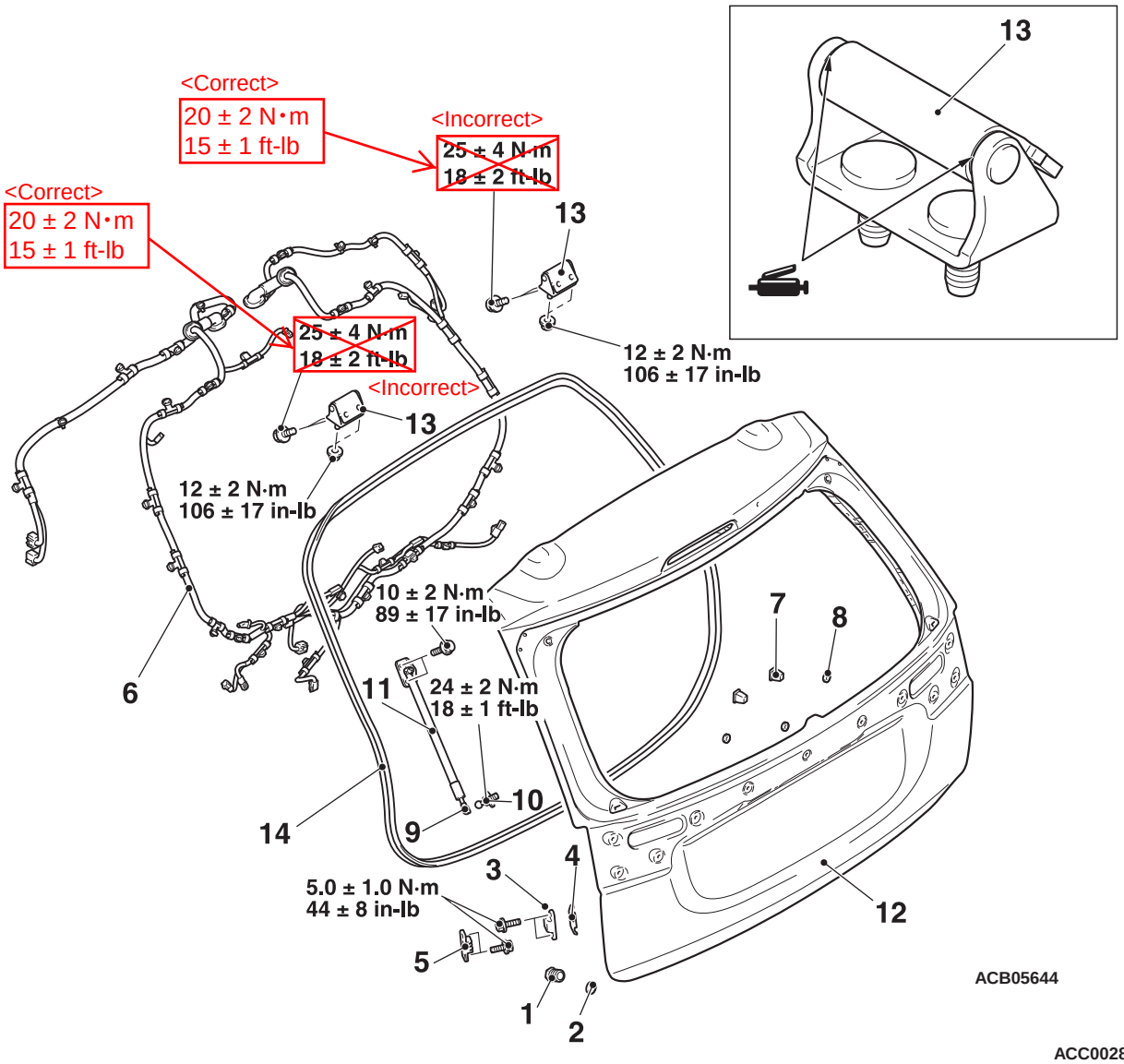

ACC00284AB

LIFTGATE

REMOVAL AND INSTALLATION

M1424001100996

Pre-removal operation	Post-installation operation
• Liftgate trim removal (Refer to GROUP 52A – Liftgate Trim .) • Rear wiper blade assembly, rear wiper motor and rear washer hose removal (Refer to GROUP 51 – Rear Wiper and Washer .) • High-mounted stoplight assembly removal (Refer to GROUP 54A – High-mounted Stop Lamp .) • Liftgate garnish removal (Refer to GROUP 51 – Liftgate Garnish .) • Liftgate window glass removal (Refer to P.42A-23.)	• Liftgate alignment (Refer to P.42A-82.) • Adjustment of liftgate height (Refer to P.42A-83.) • Liftgate window glass installation (Refer to P.42A-23.) • Liftgate garnish installation (Refer to GROUP 51 – Liftgate Garnish .) • High-mounted stoplight assembly installation (Refer to GROUP 54A – High-mounted Stop Lamp .) • Rear wiper blade assembly, rear wiper motor and rear washer hose installation (Refer to GROUP 51 – Rear Wiper and Washer .) • Liftgate trim installation (Refer to GROUP 52A – Liftgate Trim .)

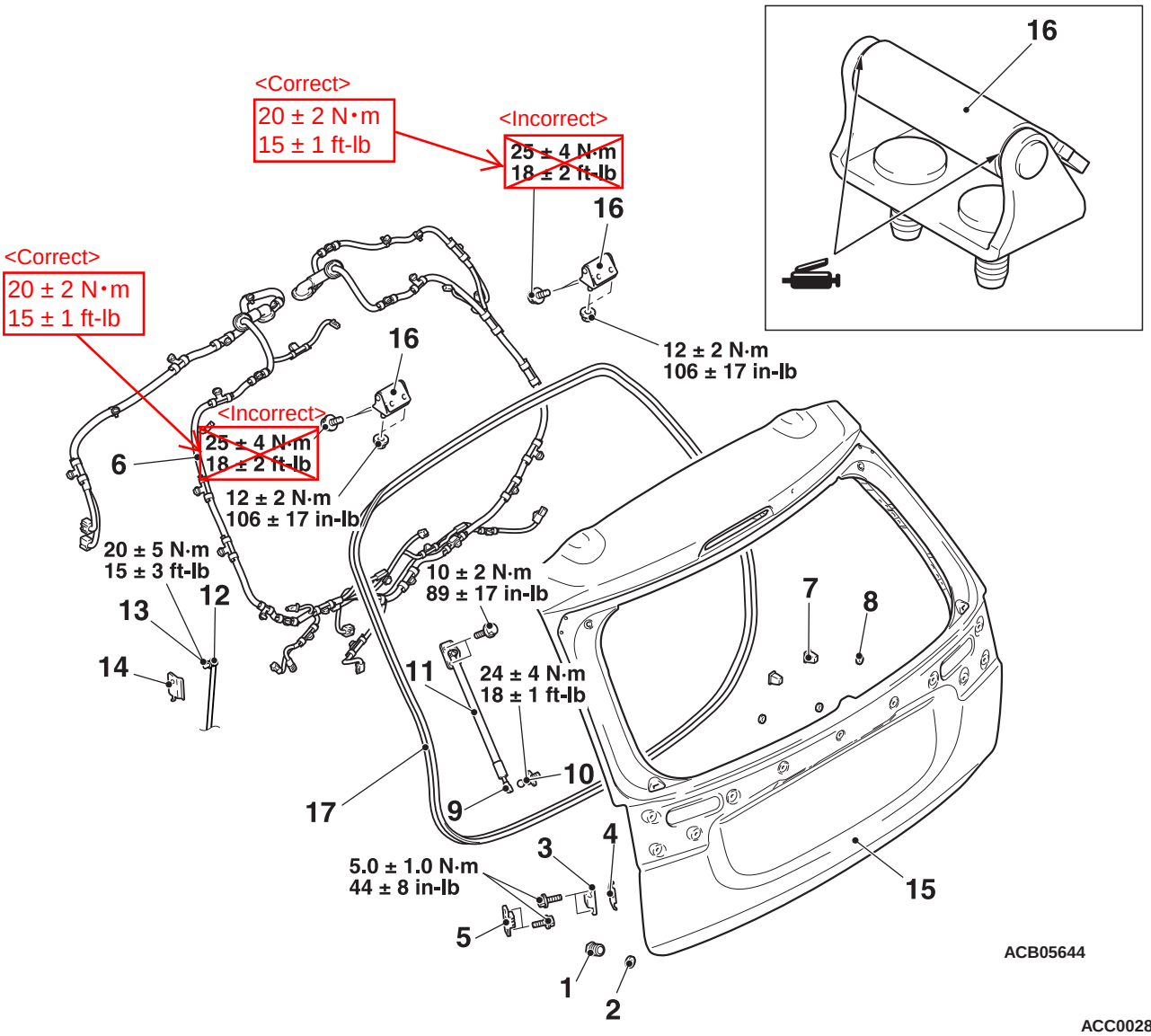

ACC00283AB

TAILGATE

REMOVAL AND INSTALLATION

M1424001100985

Pre-removal operation	Post-installation operation
• Tailgate trim removal (Refer to GROUP 52A – Tailgate Trim .) • Rear wiper blade assembly, rear wiper motor and rear washer hose removal (Refer to GROUP 51 – Rear Wiper and Washer .) • High-mounted stop lamp assembly removal (Refer to GROUP 54A – High-mounted stop lamp .) • Tailgate garnish removal (Refer to GROUP 51 – Tailgate Garnish .) • Tailgate window glass removal (Refer to P.42A-20.)	• Tailgate alignment (Refer to P.42A-80.) • Adjustment of tailgate height (Refer to P.42A-81.) • Tailgate window glass installation (Refer to P.42A-20.) • Tailgate garnish installation (Refer to GROUP 51 – Tailgate Garnish .) • High-mounted stop lamp assembly installation (Refer to GROUP 54A – High-mounted stop lamp .) • Rear wiper blade assembly, rear wiper motor and rear washer hose installation (Refer to GROUP 51 – Rear wiper and washer .) • Tailgate trim installation (Refer to GROUP 52A – Tailgate Trim .)

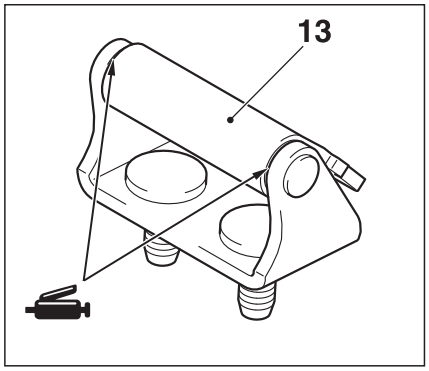

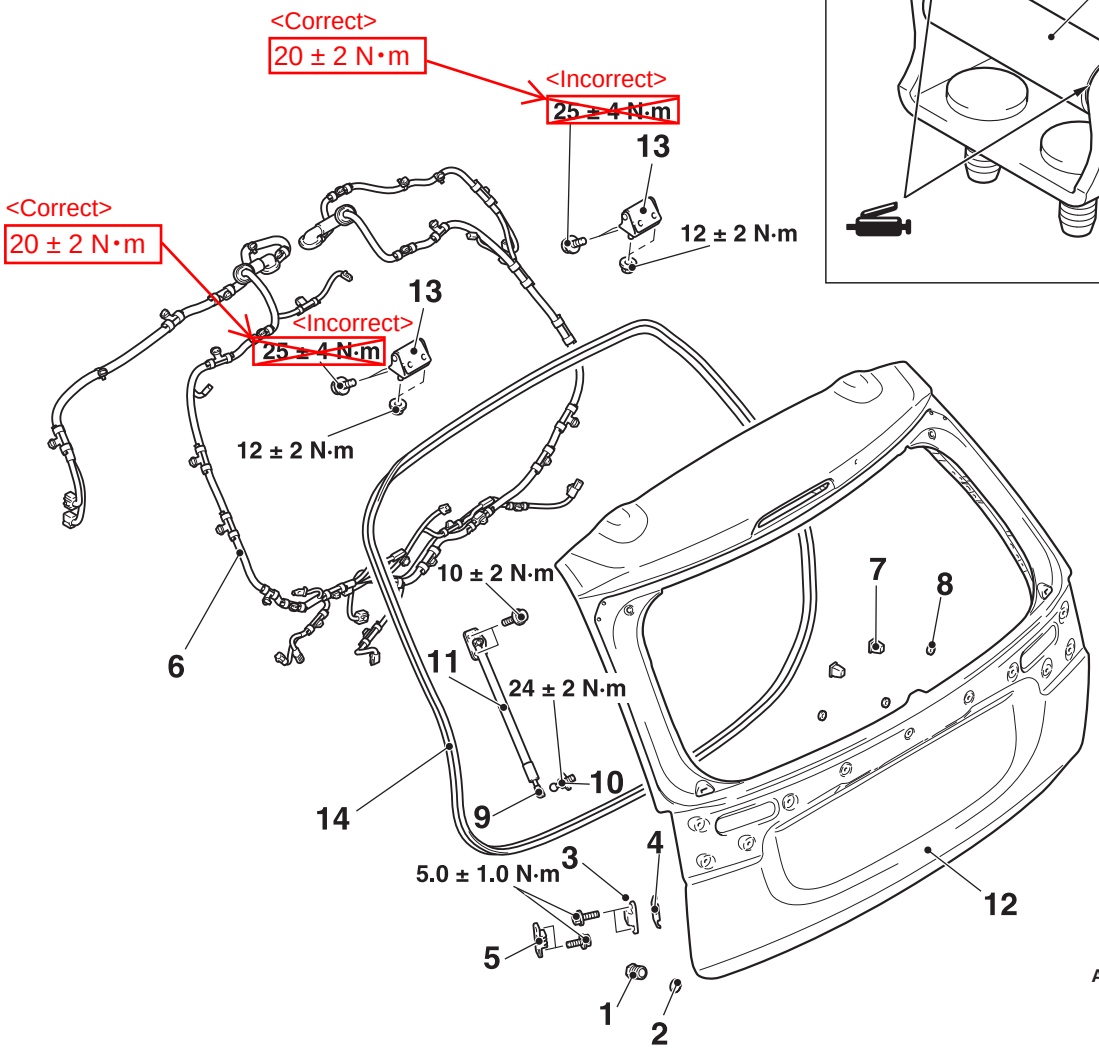

ACB05644

ACC00284AB

3. If the value is outside the standard value, adjust the electric tailgate (refer to P.42A-80).

TAILGATE

REMOVAL AND INSTALLATION

M1424001100996

Pre-removal operation	Post-installation operation
• Tailgate trim removal (Refer to GROUP 52A – Tailgate Trim .) • Rear wiper blade assembly, rear wiper motor and rear washer hose removal (Refer to GROUP 51 – Rear Wiper and Washer .) • High-mounted stop lamp assembly removal (Refer to GROUP 54A – High-mounted Stop Lamp .) • Tailgate garnish removal (Refer to GROUP 51 – Tailgate Garnish .) • Tailgate window glass removal (Refer to P.42A-20.)	• Tailgate alignment (Refer to P.42A-80.) • Adjustment of tailgate height (Refer to P.42A-81.) • Tailgate window glass installation (Refer to P.42A-20.) • Tailgate garnish installation (Refer to GROUP 51 – Tailgate Garnish .) • High-mounted stop lamp assembly installation (Refer to GROUP 54A – High-mounted Stop Lamp .) • Rear wiper blade assembly, rear wiper motor and rear washer hose installation (Refer to GROUP 51 – Rear Wiper and Washer .) • Tailgate trim installation (Refer to GROUP 52A – Tailgate Trim .)

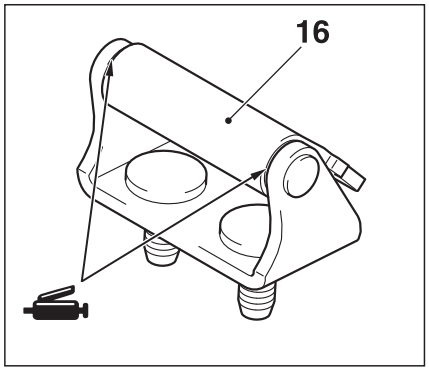

ACB05644

ACC00283AB