# SERVICE BULLETIN

MITSUBISHI MOTORS

GLOBAL AFTER SALES OFFICE, MITSUBISHI MOTORS CORPORATION

| | | |
|---|---|---|
| PURPOSE : CHANGE | ISSUE NO. : MSB-14EXML51-001 | DATE : 2014-01-21 |
| SUBJECT : REMOVAL AND INSTALLATION OF FRONT BUMPER ASSEMBLY AND RADIATOR GRILL | | <DESTINATION/MODEL> (As per attached sheet 1) <M/Y> 13-14 |
| GROUP : EXTERIOR(Gr:51) | | MIRAGE/SPACE STAR (A03A) |

## 1. Description :

Please refer to the attached document for the information about the change of mention in the applicable service manual.(The clip used for installation of the splash shield is changed to the bolt with washer)

## 2. Affected service manuals :

Please refer to the attached document (Attached sheet 1)

## 3. About the details :

Please refer to the following illustration.
This change is applicable to the vehicle produced after the middle of May 2013.

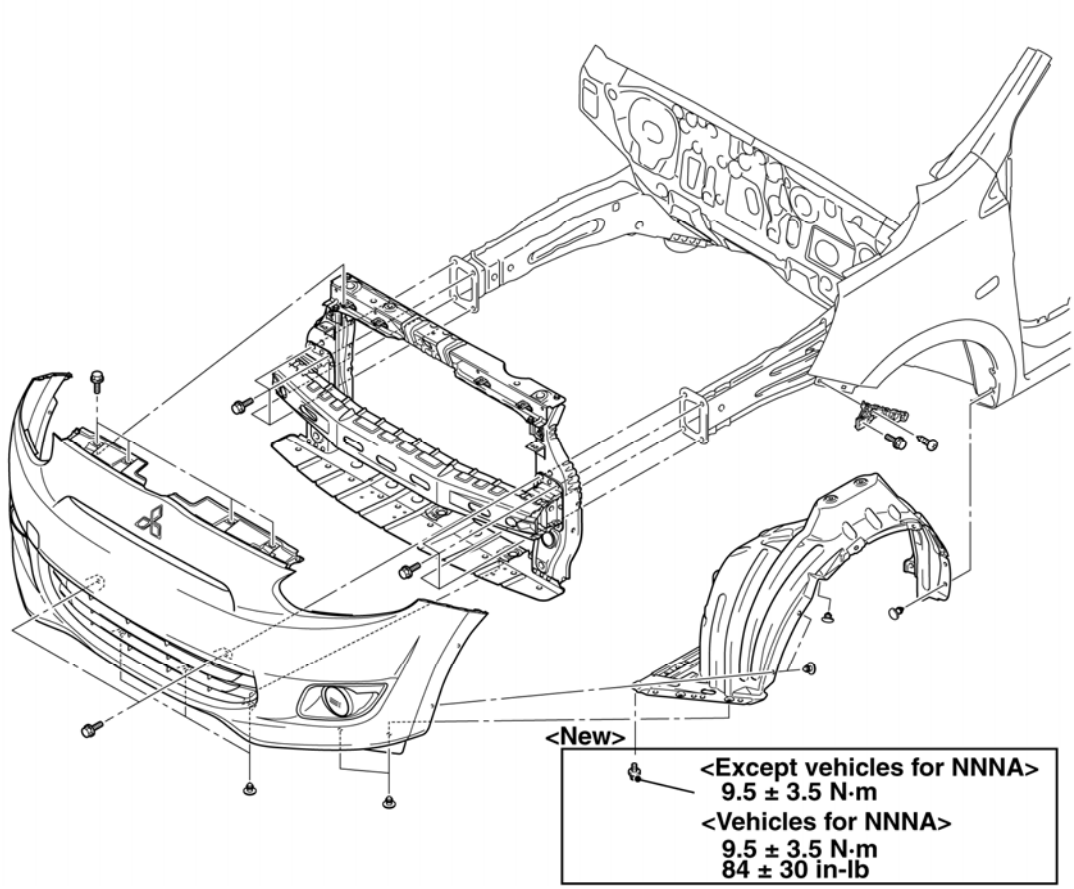

MMNA

| Applicable manual | Pub No. | Applicable title (INFO ID) |
|---|---|---|
| 2014 MIRAGE Service Manual | MSCD-016B-2014 | FRONT BUMPER ASSEMBLY AND RADIATOR GRILLE REMOVAL AND INSTALLATION (M511-02-540-94300-01) |

EU

| Applicable manual | Pub No. | Applicable title (INFO ID) |
|---|---|---|
| 2013 MIRAGE/ SPACE STAR Workshop Manual | CA0E13E1-CD(Eng)<br>CA0F13E1-CD(Fre)<br>CA0G13E1-CD(Ger)<br>CA0S13E1-CD(Spa)<br>CA0I13E1-CD(Ita) | FRONT BUMPER ASSEMBLY AND RADIATOR GRILLE REMOVAL AND INSTALLATION (M511-02-540-94300-01) |

G.EXP/GCC

| Applicable manual | Pub No. | Applicable title (INFO ID) |
|---|---|---|
| 2014 MIRAGE/ SPACE STAR Workshop Manual | PWFE1301R (Eng)<br>PWFS1302R (Spa) | FRONT BUMPER ASSEMBLY AND RADIATOR GRILLE REMOVAL AND INSTALLATION (M511-02-540-94300-01) |

MMAL/NZ

| Applicable manual | Pub No. | Applicable title (INFO ID) |
|---|---|---|
| 2014 MIRAGE Workshop Manual | AU900305 DRAFT (NZ) | FRONT BUMPER ASSEMBLY AND RADIATOR GRILLE REMOVAL AND INSTALLATION (M511-02-540-94300-01) |

Thailand

| Applicable manual | Pub No. | Applicable title (INFO ID) |
|---|---|---|
| 2013 MIRAGE Workshop Manual | PWFE1201R | FRONT BUMPER ASSEMBLY AND RADIATOR GRILLE REMOVAL AND INSTALLATION (M511-02-540-94300-01) |