SERVICE BULLETIN

GLOBAL AFTER SALES OFFICE, MITSUBISHI MOTORS CORPORATION

PURPOSE : CHANGE	ISSUE NO. : MSB-14EXML51-001A	DATE : 2014-01-30
SUBJECT : REMOVAL AND INSTALLATION OF FRONT BUMPER ASSEMBLY AND RADIATOR GRILL		<DESTINATION/MODEL> (As per attached sheet 1) <M/Y> 13-14
GROUP : EXTERIOR(Gr:51)		MIRAGE/SPACE STAR (A03A)

1. Description :

Please refer to the attached document for the information about the change of mention in the applicable service manual.(The clip used for installation of the splash shield is changed to the bolt with washer)

2. Affected service manuals :

Please refer to the attached document (Attached sheet 1)

3. About the details :

Please refer to the following illustration.
This change is applicable to the vehicle produced after the middle of May 2013.

※ **Original MSB(MSB-14EXML51-001) was issue on Jan 21,2014**
※ **Revised A version(MSB-14EXML51-001A) was issue on Jan 30, 2014**

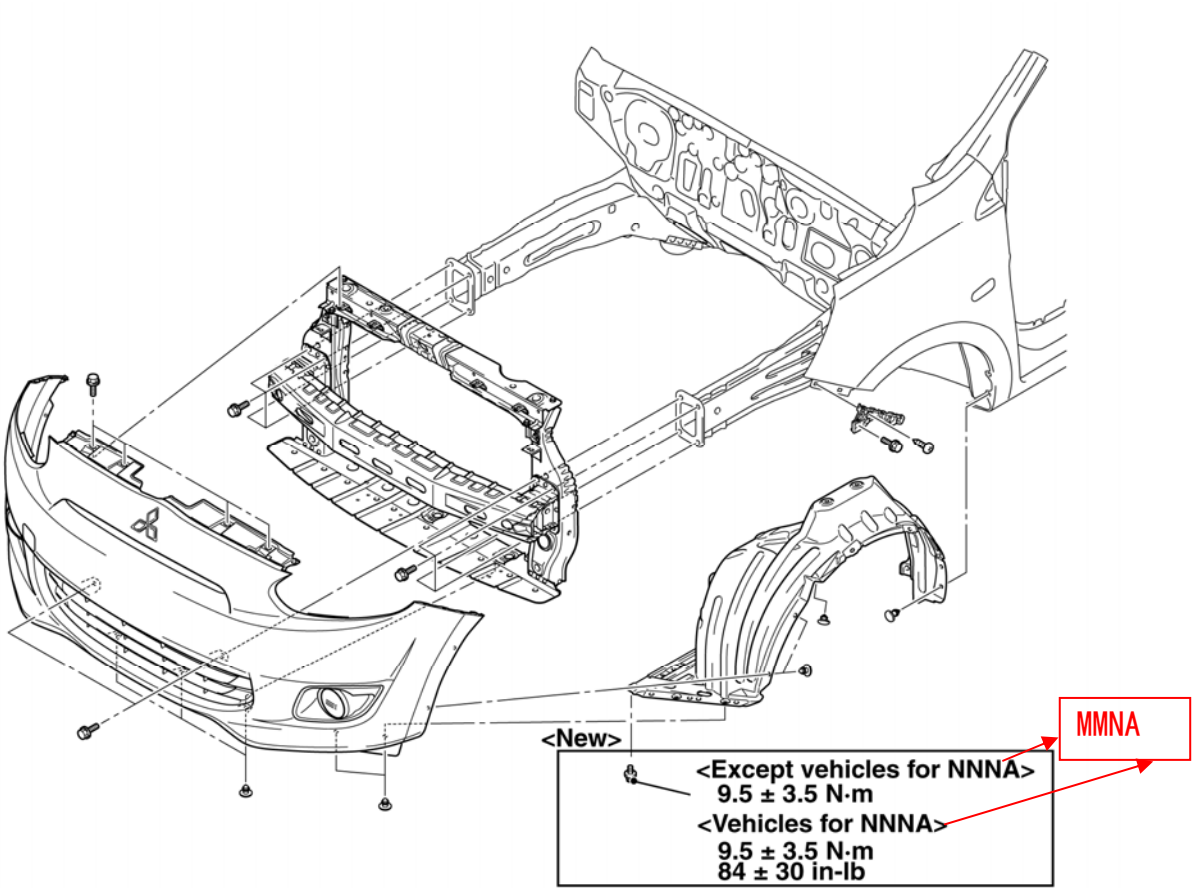

MMNA

Applicable manual	Pub No.	Applicable title (INFO ID)
2014 MIRAGE Service Manual	MSCD-016B-2014	FRONT BUMPER ASSEMBLY AND RADIATOR GRILLE REMOVAL AND INSTALLATION (M511-02-540-94300-01)

EU

Applicable manual	Pub No.	Applicable title (INFO ID)
2013 MIRAGE/ SPACE STAR Workshop Manual	CA0E13E1-CD(Eng) CA0F13E1-CD(Fre) CA0G13E1-CD(Ger) CA0S13E1-CD(Spa) CA0I13E1-CD(Ita)	FRONT BUMPER ASSEMBLY AND RADIATOR GRILLE REMOVAL AND INSTALLATION (M511-02-540-94300-01)

G.EXP/GCC

Applicable manual	Pub No.	Applicable title (INFO ID)
2014 MIRAGE/ SPACE STAR Workshop Manual	PWFE1301R (Eng) PWFS1302R (Spa)	FRONT BUMPER ASSEMBLY AND RADIATOR GRILLE REMOVAL AND INSTALLATION (M511-02-540-94300-01)

MMAL/NZ

Applicable manual	Pub No.	Applicable title (INFO ID)
2014 MIRAGE Workshop Manual	AU900305 DRAFT (NZ)	FRONT BUMPER ASSEMBLY AND RADIATOR GRILLE REMOVAL AND INSTALLATION (M511-02-540-94300-01)

Thailand

Applicable manual	Pub No.	Applicable title (INFO ID)
2013 MIRAGE Workshop Manual	PWFE1201R	FRONT BUMPER ASSEMBLY AND RADIATOR GRILLE REMOVAL AND INSTALLATION (M511-02-540-94300-01)