SERVICE BULLETIN

MITSUBISHI MOTORS

GLOBAL AFTER SALES OFFICE, MITSUBISHI MOTORS CORPORATION

PURPOSE : CORRECTION	ISSUE NO. : MSB-14EXMLPC33-501A	DATE : 2014-07-02
SUBJECT : Omission of the Instruction of application of the silicon grease in the strut assembly.		<DESTINATION/MODEL> (As per attached sheet 1) <M/Y> 07-15
GROUP : Front suspention (Gr:33)		

1. Description :

Please refer to the attached document for the correction of the error existing in the applicable service manual.

2. Affected service manuals :

Please refer to the attached document (Attached sheet 1)

3. About the details :

Please refer to the attached document (Attached sheets 4-7)

For overseas market

【MMNA/MEXICO】

Applicable manual	Pub. No.	Applicable title (INFO-ID)	Contents
2007 OUTLANDER Service Manual	MSCD-007B-2007 MEXICO:DRAFT	LUBRICANT(S) (M333-00-040-04700-01)	Attached sheet 4
		STRUT ASSEMBLY DISASSEMBLY AND ASSEMBLY (M332-00-130-98700-01)	Attached sheet 5
2008 OUTLANDER Service Manual	MSCD-007B-2008 MEXICO:DRAFT	LUBRICANT(S) (M333-00-040-04700-01)	Attached sheet 4
		STRUT ASSEMBLY DISASSEMBLY AND ASSEMBLY (M332-00-130-98700-01)	Attached sheet 5
2009 OUTLANDER Service Manual	MSCD-007B-2009 MEXICO:DRAFT	LUBRICANT(S) (M333-00-040-04700-01)	Attached sheet 4
		STRUT ASSEMBLY DISASSEMBLY AND ASSEMBLY (M332-00-130-98700-01)	Attached sheet 5
2010 OUTLANDER Service Manual	MSCD-007B-2010 MEXICO:DRAFT	LUBRICANT(S) (M333-00-040-04700-01)	Attached sheet 4
		STRUT ASSEMBLY DISASSEMBLY AND ASSEMBLY (M332-00-130-98701-01)	Attached sheet 5
2011 OUTLANDER Service Manual	MSCD-007B-2011 MEXICO: DRAFT	LUBRICANT(S) (M333-00-040-04700-01)	Attached sheet 4
		STRUT ASSEMBLY DISASSEMBLY AND ASSEMBLY (M332-00-130-98701-01)	Attached sheet 5
2012 OUTLANDER Service Manual	MSCD-007B-2012 MEXICO: DRAFT	LUBRICANT(S) (M333-00-040-04700-01)	Attached sheet 4
		STRUT ASSEMBLY DISASSEMBLY AND ASSEMBLY (M332-00-130-98701-01)	Attached sheet 5
2008 LANCER Service Manual	MSCD-106B-2008 MEXICO:DRAFT	LUBRICANT(S) (M333-00-040-04700-01)	Attached sheet 4
		STRUT ASSEMBLY DISASSEMBLY AND ASSEMBLY (M332-00-130-99800-01)	Attached sheet 5
2009 LANCER Service Manual	MSCD-106B-2009 MEXICO:DRAFT	LUBRICANT(S) (M333-00-040-04700-01)	Attached sheet 4
		STRUT ASSEMBLY DISASSEMBLY AND ASSEMBLY (M332-00-130-99800-01)	Attached sheet 5
2009 LANCER SPORTBACK Service Manual	MSCD-014B-2009 MEXICO:DRAFT	LUBRICANT(S) (M333-00-040-04700-01)	Attached sheet 4
		STRUT ASSEMBLY DISASSEMBLY AND ASSEMBLY (M332-00-130-99801-01)	Attached sheet 5
2010 LANCER Service Manual	MSCD-106B-2010 MEXICO:DRAFT	LUBRICANT(S) (M333-00-040-04700-01)	Attached sheet 4
		STRUT ASSEMBLY DISASSEMBLY AND ASSEMBLY (M332-00-130-99801-01)	Attached sheet 5
2010 LANCER SPORTBACK Service Manual	MSCD-014B-2010 MEXICO:DRAFT	LUBRICANT(S) (M333-00-040-04700-01)	Attached sheet 4
		STRUT ASSEMBLY DISASSEMBLY AND ASSEMBLY (M332-00-130-99801-01)	Attached sheet 5
2011 LANCER/LANCER SPORTBACK Service Manual	MSCD-106B-2011 MEXICO: DRAFT	LUBRICANT(S) (M333-00-040-04700-01)	Attached sheet 4
		STRUT ASSEMBLY DISASSEMBLY AND ASSEMBLY (M332-00-130-99801-01)	Attached sheet 5
2012 LANCER/LANCER SPORTBACK Service Manual	MSCD-106B-2012 MEXICO: DRAFT	LUBRICANT(S) (M333-00-040-04700-01)	Attached sheet 4
		STRUT ASSEMBLY DISASSEMBLY AND ASSEMBLY (M332-00-130-99801-01)	Attached sheet 5
2013 LANCER/LANCER SPORTBACK Service Manual	MSCD-106B-2013 MEXICO: DRAFT	LUBRICANT(S) (M333-00-040-04700-01)	Attached sheet 4
		STRUT ASSEMBLY DISASSEMBLY AND ASSEMBLY (M332-00-130-99801-01)	Attached sheet 5
2014 LANCER/LANCER SPORTBACK Service Manual	MSCD-106B-2014 MEXICO:DRAFT	LUBRICANT(S) (M333-00-040-04700-01)	Attached sheet 4
		STRUT ASSEMBLY DISASSEMBLY AND ASSEMBLY (M332-00-130-99801-01)	Attached sheet 5
2011 OUTLANDER SPORT, RVR Service Manual	MSCD-017B-2011 MEXICO:DRAFT	LUBRICANT(S) (M333-00-040-05800-01)	Attached sheet 4
		STRUT ASSEMBLY DISASSEMBLY AND ASSEMBLY (M332-00-131-11700-01)	Attached sheet 5
2012 OUTLANDER SPORT, RVR Service Manual	MSCD-017B-2012 MEXICO:DRAFT	LUBRICANT(S) (M333-00-040-05800-01)	Attached sheet 4
		STRUT ASSEMBLY DISASSEMBLY AND ASSEMBLY (M332-00-131-11700-01)	Attached sheet 5
2013 OUTLANDER SPORT, RVR Service Manual	MSCD-017B-2013 MEXICO:DRAFT	LUBRICANT(S) (M333-00-040-05800-01)	Attached sheet 4
		STRUT ASSEMBLY DISASSEMBLY AND ASSEMBLY (M332-00-131-11700-01)	Attached sheet 5
2014 OUTLANDER SPORT, RVR, ASX Service Manual	MSCD-017B-2014 MEXICO:DRAFT	LUBRICANT(S) (M333-00-040-05800-01)	Attached sheet 4
		STRUT ASSEMBLY DISASSEMBLY AND ASSEMBLY (M332-00-131-11700-01)	Attached sheet 5

【EU/RUSSIA】

Applicable manual	Pub. No.	Applicable title (INFO-ID)	Contents
2007 OUTLANDER Workshop Manual	CGXE07E1-CD(ENG) CGXF07E1-CD(FRE) CGXG07E1-CD(GER) CGXS07E1-CD(SPA) Russia: N/A	LUBRICANT(S) (M332-00-040-38900-01)	Attached sheet 6
		STRUT ASSEMBLY DISASSEMBLY AND ASSEMBLY (M332-00-130-70500-01)	Attached sheet 7
2008 OUTLANDER Workshop Manual	CGXE08E2-CD(ENG) CGXF08E2-CD(FRE) CGXG08E2-CD(GER) CGXS08E2-CD(SPA) Russia: N/A	LUBRICANT(S) (M332-00-040-38900-01)	Attached sheet 6
		STRUT ASSEMBLY DISASSEMBLY AND ASSEMBLY (M332-00-130-70501-01)	Attached sheet 7
2009 OUTLANDER Workshop Manual	CGXE09E2-CD(ENG) CGXF09E2-CD(FRE) CGXG09E2-CD(GER) CGXS09E2-CD(SPA) Russia: N/A	LUBRICANT(S) (M332-00-040-38901-01)	Attached sheet 6
		STRUT ASSEMBLY DISASSEMBLY AND ASSEMBLY (M332-00-130-73803-01)	Attached sheet 7
2010 OUTLANDER Workshop Manual	CGXE10E1-CD(ENG) CGXF10E1-CD(FRE) CGXG10E1-CD(GER) CGXS10E1-CD(SPA) Russia: N/A	LUBRICANT(S) (M332-00-040-38901-01)	Attached sheet 6
		STRUT ASSEMBLY DISASSEMBLY AND ASSEMBLY (M332-00-130-73803-01)	Attached sheet 7
2011 OUTLANDER Workshop Manual	CGXE11E1-CD(ENG) CGXF11E1-CD(FRE) CGXG11E1-CD(GER) CGXS11E1-CD(SPA) Russia: N/A	LUBRICANT(S) (M332-00-040-38901-01)	Attached sheet 6
		STRUT ASSEMBLY DISASSEMBLY AND ASSEMBLY (M332-00-130-73803-01)	Attached sheet 7
2012 OUTLANDER Workshop Manual	CGXE12E1-CD(ENG) CGXF12E1-CD(FRE) CGXG12E1-CD(GER) CGXS12E1-CD(SPA) Russia: N/A	LUBRICANT(S) (M332-00-040-38901-01)	Attached sheet 6
		STRUT ASSEMBLY DISASSEMBLY AND ASSEMBLY (M332-00-130-73803-01)	Attached sheet 7
2008 4007 (PEUGEOT)/C-Crosser (CITROEN) Workshop Manual	N/A	LUBRICANT(S) (M332-00-040-50500-01)	Attached sheet 6
		STRUT ASSEMBLY DISASSEMBLY AND ASSEMBLY (M332-00-130-76100-01)	Attached sheet 7
2009 4007 (PEUGEOT)/C-Crosser (CITROEN) Workshop Manual	N/A	LUBRICANT(S) (M332-00-040-58300-01)	Attached sheet 6
		STRUT ASSEMBLY DISASSEMBLY AND ASSEMBLY (M332-00-131-01001-01)	Attached sheet 7
2010 4007 (PEUGEOT)/C-Crosser (CITROEN) Workshop Manual	N/A	LUBRICANT(S) (M332-00-040-58300-01)	Attached sheet 6
		STRUT ASSEMBLY DISASSEMBLY AND ASSEMBLY (M332-00-131-01001-01)	Attached sheet 7
2008 LANCER Workshop Manual	CG1E08E2-CD(ENG) CG1F08E2-CD(FRE) CG1G08E2-CD(GER) CG1S08E2-CD(SPA) Russia: N/A	STRUT ASSEMBLY DISASSEMBLY AND ASSEMBLY (M332-00-130-79400-01)	Attached sheet 7
2009 LANCER Workshop Manual	CG1E09E1-CD(ENG) CG1F09E1-CD(FRE) CG1G09E1-CD(GER) CG1S09E1-CD(SPA) CG1I09E1-CD(ITA) Russia: N/A	LUBRICANT(S) (M332-00-040-57200-01)	Attached sheet 6
		STRUT ASSEMBLY DISASSEMBLY AND ASSEMBLY (M332-00-130-79400-01)	Attached sheet 7
2010 LANCER Workshop Manual	CG1E10E1-CD(ENG) CG1F10E1-CD(FRE) CG1G10E1-CD(GER) CG1S10E1-CD(SPA) CG1I10E1-CD(ITA) Russia: N/A	LUBRICANT(S) (M332-00-040-57200-01)	Attached sheet 6
		STRUT ASSEMBLY DISASSEMBLY AND ASSEMBLY (M332-00-130-79402-01)	Attached sheet 7

Applicable manual	Pub. No.	Applicable title (INFO-ID)	Contents
2009 LANCER SPORTBACK Workshop Manual	CG4E09E1-CD(ENG) CG4F09E1-CD(FRE) CG4G09E1-CD(GER) CG4S09E1-CD(SPA) CG4I09E1-CD(ITA) Russia: N/A	LUBRICANT(S) (M332-00-040-57200-01)	Attached sheet 6
		STRUT ASSEMBLY DISASSEMBLY AND ASSEMBLY (M332-00-130-79401-01)	Attached sheet 7
2010 LANCER SPORTBACK Workshop Manual	CG4E10E1-CD(ENG) CG4F10E1-CD(FRE) CG4G10E1-CD(GER) CG4S10E1-CD(SPA) CG4I10E1-CD(ITA) Russia: N/A	LUBRICANT(S) (M332-00-040-57200-01)	Attached sheet 6
		STRUT ASSEMBLY DISASSEMBLY AND ASSEMBLY (M332-00-130-79402-01)	Attached sheet 7
2011 LANCER/LANCER SPORTBACK Workshop Manual	CG1E11E1-CD(ENG) CG1F11E1-CD(FRE) CG1G11E1-CD(GER) CG1S11E1-CD(SPA) CG1I11E1-CD(ITA) Russia: N/A	LUBRICANT(S) (M332-00-040-57200-01)	Attached sheet 6
		STRUT ASSEMBLY DISASSEMBLY AND ASSEMBLY (M332-00-130-79402-01)	Attached sheet 7
2012 LANCER/LANCER SPORTBACK Workshop Manual	CGSE12E1-CD(ENG) CGSF12E1-CD(FRE) CGSG12E1-CD(GER) CGSS12E1-CD(SPA) CGSI12E1-CD(ITA) Russia: N/A	LUBRICANT(S) (M332-00-040-57200-01)	Attached sheet 6
		STRUT ASSEMBLY DISASSEMBLY AND ASSEMBLY (M332-00-130-79402-01)	Attached sheet 7
2013 LANCER/LANCER SPORTBACK Workshop Manual	CCAE13E1-CD(ENG) CCAF13E1-CD(FRE) CCAG13E1-CD(GER) CCAS13E1-CD(SPA) CCAI13E1-CD(ITA) Russia: N/A	LUBRICANT(S) (M332-00-040-57200-01)	Attached sheet 6
		STRUT ASSEMBLY DISASSEMBLY AND ASSEMBLY (M332-00-130-79402-01)	Attached sheet 7
2011 ASX Workshop Manual	CGWE11E2-CD(ENG) CGWF11E2-CD(FRE) CGWG11E2-CD(GER) CGWS11E2-CD(SPA) CGWI11E2-CD(ITA) Russia: N/A South Africa: DRAFT	LUBRICANT(S) (M332-00-040-68000-01)	Attached sheet 6
		STRUT ASSEMBLY DISASSEMBLY AND ASSEMBLY (M332-00-131-10600-01)	Attached sheet 7
2012 ASX Workshop Manual	CGWE12E1-CD(ENG) CGWF12E1-CD(FRE) CGWG12E1-CD(GER) CGWS12E1-CD(SPA) CGWI12E1-CD(ITA) Russia: N/A South Africa: DRAFT	LUBRICANT(S) (M332-00-040-68000-01)	Attached sheet 6
		STRUT ASSEMBLY DISASSEMBLY AND ASSEMBLY (M332-00-131-10600-01)	Attached sheet 7
2013 ASX Workshop Manual	CGAE13E2-CD(ENG) CGAF13E2-CD(FRE) CGAG13E2-CD(GER) CGAS13E2-CD(SPA) CGAI13E2-CD(ITA) Russia: N/A South Africa: DRAFT	LUBRICANT(S) (M332-00-040-68000-01)	Attached sheet 6
		STRUT ASSEMBLY DISASSEMBLY AND ASSEMBLY (M332-00-131-10600-01)	Attached sheet 7
2014 ASX Workshop Manual	CGAE14E1-CD(ENG) CGAF14E1-CD(FRE) CGAG14E1-CD(GER) CGAS14E1-CD(SPA) CGAI14E1-CD(ITA) Russia: N/A South Africa: DRAFT	LUBRICANT(S) (M332-00-040-68000-01)	Attached sheet 6
		STRUT ASSEMBLY DISASSEMBLY AND ASSEMBLY (M332-00-131-10600-01)	Attached sheet 7

Applicable manual	Pub. No.	Applicable title (INFO-ID)	Contents
2015 ASX Workshop Manual	CGAE15E1-CD(ENG) CGAF15E1-CD(FRE) CGAG15E1-CD(GER) CGAS15E1-CD(SPA) CGAI15E1-CD(ITA) Russia: N/A South Africa: DRAFT	LUBRICANT(S) (M332-00-040-68000-01)	Attached sheet 6
		STRUT ASSEMBLY DISASSEMBLY AND ASSEMBLY (M332-00-131-10600-01)	Attached sheet 7

【G.EXP/GCC】

Applicable manual	Pub. No.	Applicable title (INFO-ID)	Contents
2007 OUTLANDER Workshop Manual	PWRE0607R China, South Africa: DRAFT	LUBRICANT(S) (M332-00-040-46400-01)	Attached sheet 6
		STRUT ASSEMBLY DISASSEMBLY AND ASSEMBLY (M332-00-130-73800-01)	Attached sheet 7
2008 OUTLANDER Workshop Manual	PWRE0707R(ENG) PWRS0708R(SPA) Argentina, South Africa: DRAFT	LUBRICANT(S) (M332-00-040-46400-01)	Attached sheet 6
		STRUT ASSEMBLY DISASSEMBLY AND ASSEMBLY (M332-00-130-73801-01)	Attached sheet 7
2008 LANCER/LANCER EX Workshop Manual	PWME0701R(ENG) PWMS0702R(SPA) Argentina, South Africa: DRAFT	STRUT ASSEMBLY DISASSEMBLY AND ASSEMBLY (M332-00-130-77200-01)	Attached sheet 7
2009 LANCER/LANCER EX Workshop Manual	PWME0802R(ENG) PWMS0803R(SPA) Argentina, South Africa: DRAFT	LUBRICANT(S) (M332-00-040-57200-01)	Attached sheet 6
		STRUT ASSEMBLY DISASSEMBLY AND ASSEMBLY (M332-00-130-77201-01)	Attached sheet 7
2010 LANCER/LANCER EX Workshop Manual	PWME0901R(ENG) PWMS0902R(SPA) Argentina, South Africa: DRAFT	LUBRICANT(S) (M332-00-040-57200-01)	Attached sheet 6
		STRUT ASSEMBLY DISASSEMBLY AND ASSEMBLY (M332-00-131-03201-01)	Attached sheet 7
2009 OUTLANDER Workshop Manual	PWRE0810R(ENG) PWRS0811R(SPA) China, Argentina, South Africa: DRAFT	LUBRICANT(S) (M332-00-040-46401-01)	Attached sheet 6
		STRUT ASSEMBLY DISASSEMBLY AND ASSEMBLY (M332-00-130-73802-01)	Attached sheet 7
2010 OUTLANDER Workshop Manual	PWRE0906R(ENG) PWRS0907R(SPA) Argentina, South Africa: DRAFT	LUBRICANT(S) (M332-00-040-46401-01)	Attached sheet 6
		STRUT ASSEMBLY DISASSEMBLY AND ASSEMBLY (M332-00-130-73803-01)	Attached sheet 7
2011 ASX Workshop Manual	PWPE1006R(ENG) PWPS1007R(SPA)	LUBRICANT(S) (M332-00-040-68000-01)	Attached sheet 6
		STRUT ASSEMBLY DISASSEMBLY AND ASSEMBLY (M332-00-130-73803-01)	Attached sheet 7

【G.EXP(JAPAN SPEC)】

Applicable manual	Pub. No.	Applicable title (INFO-ID)	Contents
2006 OUTLANDER Workshop Manual	PWRE0503R	LUBRICANT(S) (M332-00-040-31200-01)	Attached sheet 6
		STRUT ASSEMBLY DISASSEMBLY AND ASSEMBLY (M332-00-130-65300-01)	Attached sheet 7
2008 OUTLANDER Workshop Manual	PWRE0712R	LUBRICANT(S) (M332-00-040-46400-01)	Attached sheet 6
		STRUT ASSEMBLY DISASSEMBLY AND ASSEMBLY (M332-00-130-95400-01)	Attached sheet 7
2007 DELICA D:5 Workshop Manual	PWRE0711R(ENG)	LUBRICANT(S) (M332-00-040-49700-01)	Attached sheet 6
		STRUT ASSEMBLY DISASSEMBLY AND ASSEMBLY (M332-00-130-75001-01)	Attached sheet 7
2009 DELICA D:5 Workshop Manual	PWRE0804R(ENG)	LUBRICANT(S) (M332-00-040-49700-01)	Attached sheet 6
		STRUT ASSEMBLY DISASSEMBLY AND ASSEMBLY (M332-00-130-75002-01)	Attached sheet 7

【Thailand】

Applicable manual	Pub. No.	Applicable title (INFO-ID)	Contents
2009 LANCER Workshop Manual	DRAFT	LUBRICANT(S) (M332-00-040-57200-01)	Attached sheet 6
		STRUT ASSEMBLY DISASSEMBLY AND ASSEMBLY (M332-00-131-03201-01)	Attached sheet 7

【MMAL/NZ】

Applicable manual	Pub. No.	Applicable title (INFO-ID)	Contents
2007 OUTLANDER Workshop Manual	MR936083 NZ: DRAFT	LUBRICANT(S) (M332-00-040-45300-01)	Attached sheet 6
		STRUT ASSEMBLY DISASSEMBLY AND ASSEMBLY (M332-00-130-72700-01)	Attached sheet 7
2008 OUTLANDER Workshop Manual	MR936474 NZ: DRAFT	LUBRICANT(S) (M332-00-040-46400-01)	Attached sheet 6
		STRUT ASSEMBLY DISASSEMBLY AND ASSEMBLY (M332-00-130-90900-01)	Attached sheet 7
2009 OUTLANDER Workshop Manual	MR936477 NZ: DRAFT	LUBRICANT(S) (M332-00-040-46401-01)	Attached sheet 6
		STRUT ASSEMBLY DISASSEMBLY AND ASSEMBLY (M332-00-130-73802-01)	Attached sheet 7
2010 OUTLANDER Workshop Manual	MR936925 NZ: DRAFT	LUBRICANT(S) (M332-00-040-46401-01)	Attached sheet 6
		STRUT ASSEMBLY DISASSEMBLY AND ASSEMBLY (M332-00-130-73803-01)	Attached sheet 7
2008 LANCER Workshop Manual	MR936470 NZ: DRAFT	STRUT ASSEMBLY DISASSEMBLY AND ASSEMBLY (M332-00-130-84600-01)	Attached sheet 7
2009 LANCER Workshop Manual	MR936503 NZ: DRAFT	LUBRICANT(S) (M332-00-040-57200-01)	Attached sheet 6
		STRUT ASSEMBLY DISASSEMBLY AND ASSEMBLY (M332-00-130-84601-01)	Attached sheet 7
2009 LANCER SPORTBACK Workshop Manual	MR936570 NZ: DRAFT	LUBRICANT(S) (M332-00-040-57200-01)	Attached sheet 6
		STRUT ASSEMBLY DISASSEMBLY AND ASSEMBLY (M332-00-130-84601-01)	Attached sheet 7
2010 LANCER Workshop Manual	MR936920 NZ: DRAFT	LUBRICANT(S) (M332-00-040-57200-01)	Attached sheet 6
		STRUT ASSEMBLY DISASSEMBLY AND ASSEMBLY (M332-00-130-84602-01)	Attached sheet 7
2010 LANCER SPORTBACK Workshop Manual	MR936922 NZ: DRAFT	LUBRICANT(S) (M332-00-040-57200-01)	Attached sheet 6
		STRUT ASSEMBLY DISASSEMBLY AND ASSEMBLY (M332-00-130-84602-01)	Attached sheet 7
2011 ASX Workshop Manual	DRAFT	LUBRICANT(S) (M332-00-040-68000-01)	Attached sheet 6
		STRUT ASSEMBLY DISASSEMBLY AND ASSEMBLY (M332-00-130-73803-01)	Attached sheet 7

【CHINA】

Applicable manual	Pub. No.	Applicable title (INFO-ID)	Contents
2008 OUTLANDER Workshop Manual	DRAFT	LUBRICANT(S) (M332-00-040-46400-01)	Attached sheet 6
		STRUT ASSEMBLY DISASSEMBLY AND ASSEMBLY (M332-00-130-90900-01)	Attached sheet 7
2009 LANCER EX Workshop Manual	DRAFT	LUBRICANT(S) (M332-00-040-57200-01)	Attached sheet 6
		STRUT ASSEMBLY DISASSEMBLY AND ASSEMBLY (M332-00-131-03200-01)	Attached sheet 7

Attached sheet 4

ITEM	SPECIFICATION
Wheel speed sensor clamp nut	11 ± 2 N·m (98 ± 17 in-lb)
Break hose clamp nut	11 ± 2 N·m (98 ± 17 in-lb)

GENERAL SPECIFICATIONS

M1332000200352

COIL SPRING

ITEM	SPECIFICATION
Wire diameter mm (in.)	14 (0.6)
Average diameter mm (in.)	159 (6.2)
Free length mm (in.)	345 (13.5)

SERVICE SPECIFICATIONS

M1332000301471

Item		Standard value
Toe-in mm (in)		1 ± 2 (0.04 ± 0.08)
Steering angle	Inner wheel	38°40' ± 1°30'
	Outer wheel (reference value)	32°20’
Camber		0°20' ± 30' (Left/right deviation within 30')
Caster		2°35' ± 30' (Left/right deviation within 30')
Kingpin inclination		12°45' ± 1°30'
Lower arm ball joint breakaway torque N·m (in-lb)		2.2 – 4.1 (19 – 36)
Stabilizer link ball joint turning torque N·m (in-lb)		0.5 – 2.9 (4.4 – 25.7)

LUBRICANTS

M1333000400047

Item		Specified lubricant	Quantity
Lower arm ball joint	Lip portion of dust cover	Multipurpose grease SAE J310, NLGI No.2 or equivalent	As required
	Inside of dust cover		9.0 ± 1.0g (0.32 ± 0.04oz)
Strut upper insulator		Shell Retinax Grease CL0 or equivalent	As required
The contact part of an upper spring seat and bump rubber.		Silicone grease	As required

<Added>

DISASSEMBLY AND ASSEMBLY

M1332001300987

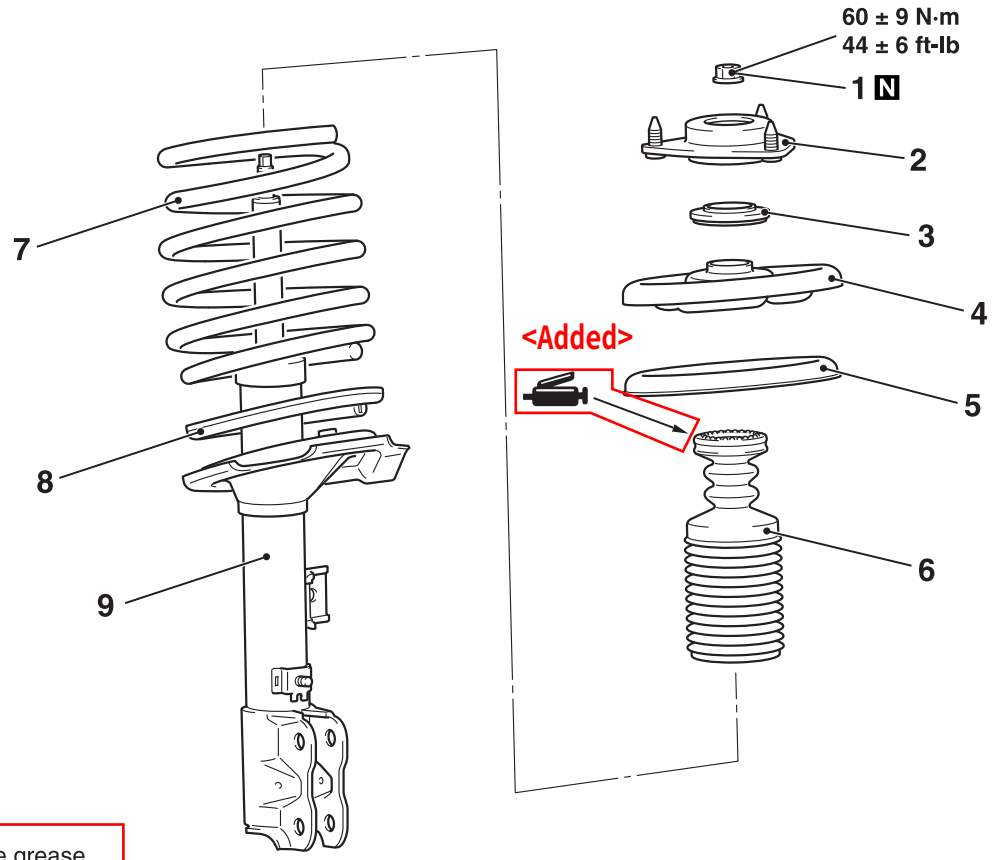

<Added>

: Silicone grease

AC704225 AI

Disassembly steps

<<A>>	>>C<<	1.	Strut nut jam nut)
		2.	Strut insulator assembly
	>>B<<	3.	Strut bearing
		4.	Upper spring seat
		5.	Upper spring pad
		6.	Bump rubber
	>>A<<	7.	Coil spring
		8.	Spring tube
<<B>>		9.	Strut

Required Special Tools:

- MB991681: Wrench
- MB991682: Socket
- MB991793: Spring compressor
- MB991794: Upper plate
- MB991795: Attachment A
- MB991830: Fixture

SERVICE SPECIFICATIONS

M1332000302117

Item		Standard value
Toe-in	At the centre of tyre tread mm	1 ± 2
	Toe-in angle (per wheel)	0°02' ± 0°04'
Camber		0°20' ± 0°30'*
Caster	Except high-ground suspension	2°35' ± 0°30'*
	High-ground suspension	2°10' ± 0°30'*
Kingpin inclination		12°45' ± 1°30'
Lower arm ball joint rotation starting torque N·m		2.2 – 4.1
Stabilizer link ball joint rotation torque N·m		0.5 – 2.9

*NOTE: *: Difference between right and left wheels must be 0°30' or less.*

LUBRICANT

M1332000400389

Item	Specified Lubricant	Quantity
Inside and lip of lower arm ball joint dust cover	Multipurpose grease SAE J310, NLGI No.2 or equivalent	Inside of dust cover : 9.0 ± 1.0 g Lip: As required
The contact part of an upper spring seat and bump rubber.	Silicone grease	As required

<Added>

SPECIAL TOOLS

M1332000600684

Tool	Number	Name	Use
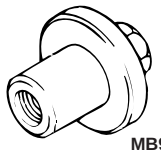	MB991004	Wheel alignment gauge attachment	Wheel alignment measurement <Vehicles with aluminium wheels>
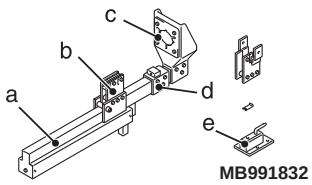	MB991832 a. MB991793 b. MB991795 c. MB991794 d. MB991829 e. MB991830	Spring compressor set a. Spring compressor b. Attachment A c. Upper plate d. Arm bracket e. Fixture	Coil spring compression
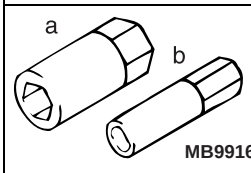	MB991680 a. MB991681 b. MB991682	Wrench set a. Wrench b. Socket	Strut assembly disassembly and assembly

DISASSEMBLY AND REASSEMBLY

M1332001300738

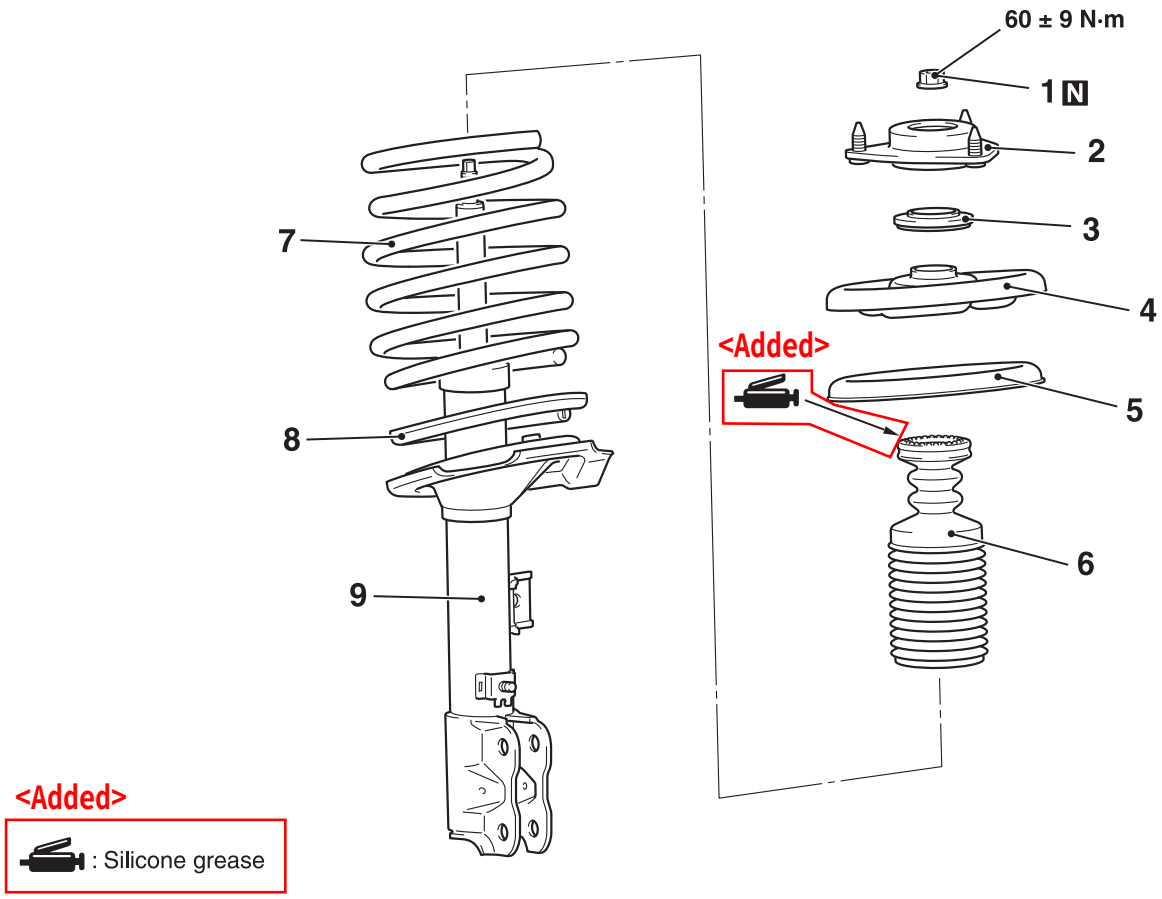

AC612822 AC

Disassembly steps

<<A>>	>>C<<	1.	Strut nut (Self-locking nut)
		2.	Strut insulator assembly
	>>B<<	3.	Strut bearing
		4.	Upper spring seat
		5.	Upper spring pad
		6.	Bump rubber
	>>A<<	7.	Coil spring
		8.	Spring tube
<<B>>		9.	Strut

DISASSEMBLY SERVICE POINTS

<<A>> STRUT NUT (SELF-LOCKING NUT) REMOVAL

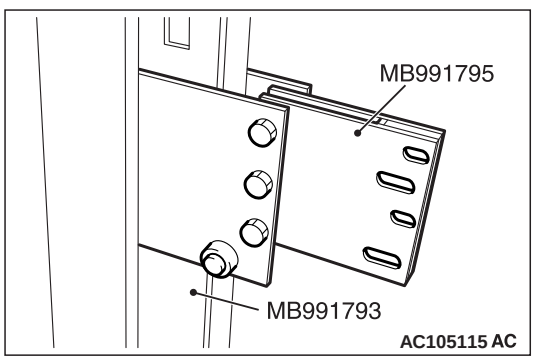

AC105115 AC

1. Install special tool attachment A (MB991795) to special tool spring compressor (MB991793) as shown in the figure.

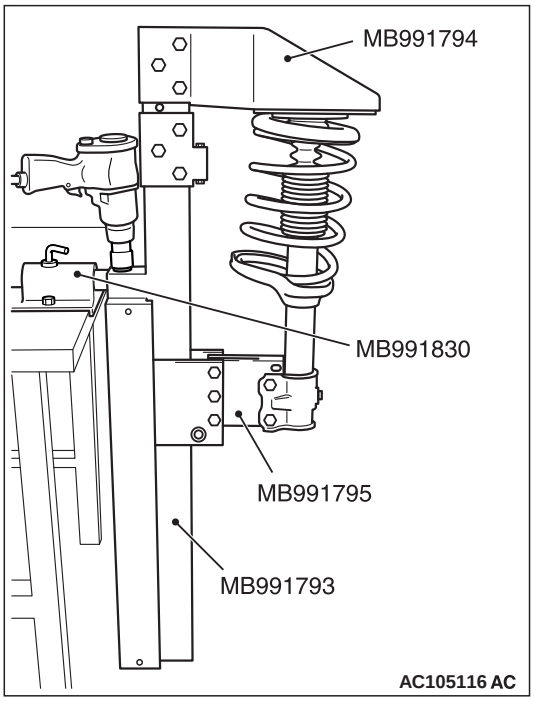

AC105116 AC