MITSUBISHI MOTORS

SERVICE BULLETIN

GLOBAL AFTER SALES OFFICE, MITSUBISHI MOTORS CORPORATION

PURPOSE : CHANGE	ISSUE NO. : MSB-15E11-002	DATE : 2015-10-15
SUBJECT : Additions of the troubleshooting of 9HD diesel engine		<DESTINATION/MODEL> (As per attached sheet) ASX(GA0W) <M/Y> 15.5
GROUP : Gr:11(Engine)		

1. Description :

Please refer to the attached document for the information about the change of mention in the applicable service manual. Also, please refer to the following service bulletins for the maintenance procedure and the electric wiring diagram for 9HD diesel engine.

- Maintenance procedure : MSB-15E11-003
- Electric wiring diagram : MSB-15E11-001

2. Affected service manuals :

Applicable manual	Pub. No.	Applicable title (INFO ID)	Content
2015.5 ASX WORKSHOP MANUAL	CGAE15E2-CD(ENG） CGAF15E2-CD(FRE) CGAG15E2-CD(GER) CGAS15E2-CD(SPA) CGAI15E2-CD(ITA)	-	Attached sheet

3. About the details :

Please refer to the attached document (Attached sheet)

4. Effective time : From 15.5MY of the related vehicles

Diagnosis help _ Fault codes _ Technical information

＞operating methods

- CONTINENTAL SID807 EVO injection (engine DV6CTED)
- DV6C engine (Stop and start)

＞fault codes

- engine DV6C (CONTINENTAL SID807) branch 2
- Stop and Start ECU

＞help in diagnosis

- the engine has stalled – engine DV6C (CONTINENTAL SID 807) branch 2
- diagnostic warning lamp lights – engine DV6C (CONTINENTAL SID 807) branch 2
- starting problem – engine DV6C (CONTINENTAL SID 807) branch 2
- engine hesitation – engine DV6C (CONTINENTAL SID 807) branch 2
- malfunctioning of the engine when idling – engine DV6C (CONTINENTAL SID 807) branch 2
- lack of power – engine DV6C (CONTINENTAL SID 807) branch 2

OPERATING METHODS : CONTINENTAL SID807 EVO INJECTION (ENGINE DV6CTED)

1 - PRESENTATION OF THE DEVICE

Hdi direct injection system CONTINENTAL SID 807 EVO (engine DV6CTED).

2 - LOCATION

Components of the pre-post heating system.

Components of the fuel circuit.

Components of the fuel additive system.

Components of the air circuit.

Components of the exhaust and particle filter circuit.

Components of the exhaust gas recycling system.

Components of the engine cooling system.

Identification of air conditioning circuit components.

Components of the lubrication circuit.

Engine speed sensor.

Cylinder reference sensor.

Components of the vacuum circuit.

Components of the battery charging circuit.

3 - MAN/MACHINE INTERFACE

The alert messages and warning lamps are displayed either in the instrument panel or on the multifunction screen.

Refer to the document : "Principles of operation : Instrument panel ".

4 - DESCRIPTION OF OPERATION : SENSOR CONNECTION

Water in diesel sensor (4050).

Diesel temperature sensor (1221).

Diesel high pressure sensor (1321).

Air flow meter (13A3).

Inlet air pressure and temperature sensor (1310).

Particulate filter upstream gas temperature sensor (1344).

Proportional oxygen sensor (1357).

Particle filter differential pressure sensor (1341).

Linear pressure sensor for the air conditioning fluid (8007).

Engine oil level sensor (4120).

Engine speed sensor (1313).

Cylinder reference sensor (1115).

5 - DESCRIPTION OF OPERATION : ACTUATOR

Pre-heater plugs (1160).

Electric diesel fuel heater (1276).

Fuel flow regulation valve (1208).

high pressure fuel pump.

Diesel injectors (1331 ; 1332 ; 1333 ; 1334).

Diesel additive pump (1283).

Variable geometry turbocharger, with position repeat sensor (1374).

Proportional electrovalve regulating the variable geometry turbocharger (1229).

Inlet air mixer unit with position repeat sensor (1324).

Electrically-controlled exhaust gas recycling module (With position copy sensor) (1297) .

Exhaust gas recycling exchanger by-pass all-or-nothing solenoid valve (1253).

oil pump.

Oil vapours electric heater (blow by) (1273).

Vacuum pump .

Fuel pump gauge module (1211 ; 4315).

6 - DESCRIPTION OF OPERATION : PASSIVE ELEMENTS

Fuel filter .

Fuel high pressure common injection rail .

Turbocharger air cooler.

Turbocharger air cooler.

catalytic converter.

Particle filter .

7 - DESCRIPTION OF OPERATION : COMPUTER

Pre-post heat box (1158).

Engine ECU (CONTINENTAL SID807 EVO) (1320).

8 - FLOW CHART

Hdi direct injection system CONTINENTAL SID 807 EVO (engine DV6CTED).

9 - FUNCTION

Pre-heating and postheating.

Fuel supply.

Fuel additive function.

Air supply.

Particulate filter regeneration.

Exhaust gas recycling (EGR).

PRESENTATION : DV6CTED ENGINE (HDI DIRECT INJECTION SYSTEM CONTINENTAL SID 807)

1 - MAIN STRUCTURE OF THE ENGINE

Special features :

- 4 cylinders, 8 valves with overhead camshaft, driven by a synchronous belt
- An inlet manifold integral with the cylinder head
- Variable geometry turbocharger with control capsule for the blades of the turbocharger (With position copy sensor)
- air/air heat exchanger (cooling of the turbocharged air)
- A single electric air mixer
- A variable geometry turbo proportional control electrovalve
- An exhaust gas recycling device (EGR)
- An electric EGR electrovalve
- An EGR cooler with pneumatically-controlled bypass
- An oxidising catalytic converter mounted directly on the turbocharger outlet
- Hdi direct injection system
- Low pressure circuit in vacuum
- A vacuum circuit without a vacuum reserve
- A coolant pump driven by the timing belt

2 - HDI DIRECT INJECTION SYSTEM CONTINENTAL SID 807

Special features of the injection system :

- Fuel injection managed as a function of engine torque
- Fuel pressure in the high pressure common rail can reach 1600 bars
- fuel pump incorporated into the high pressure fuel pump (Low pressure circuit in vacuum)
- CONTINENTAL twin-piston fuel high pressure pump
- Air flow management incorporating the EGR (exhaust gas recirculation)
- Complies with emission standard Euro 5

3 - EURO 5 EMISSION CONTROL STANDARD

Objectives of emission standard 5 :

- Reduction of emissions of carbon monoxide (CO) to 500 mg/km
- Reduction of the quantity of particles to 5 mg/km (-80 % relative to the EURO 4 norm)
- Reduction of emissions of nitrous oxides (NOx) to 180 mg/km (- 20 % relative to the EURO 4 norm)
- Reduction of combined emissions of hydrocarbons (HC) and nitrous oxides (NOx) to 230 mg/km
- Extension of life of pollution checking devices to 160 000 km

LOCATION : COMPONENTS OF THE PRE-POST HEATING SYSTEM

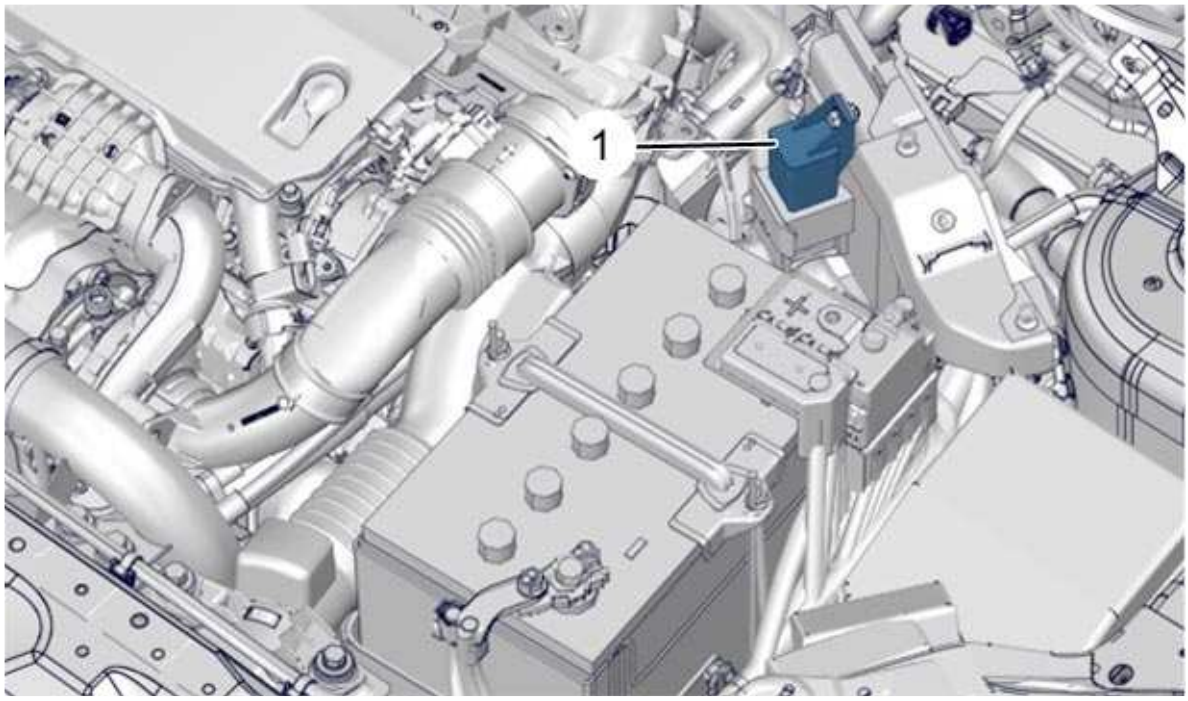

b1hb16ed

(1) Pre-post heating control unit.

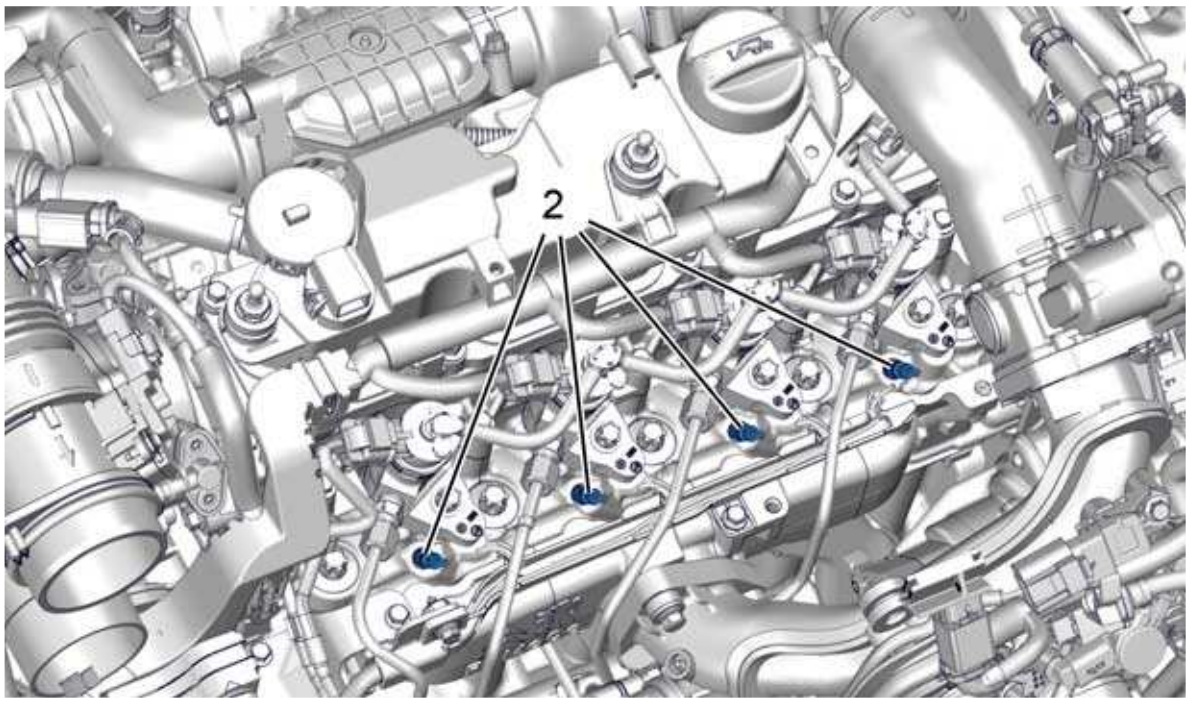

b1hb0byd

(2) Pre-post heater plugs.

LOCATION : COMPONENTS OF THE FUEL CIRCUIT

NOTE : (*) According to version

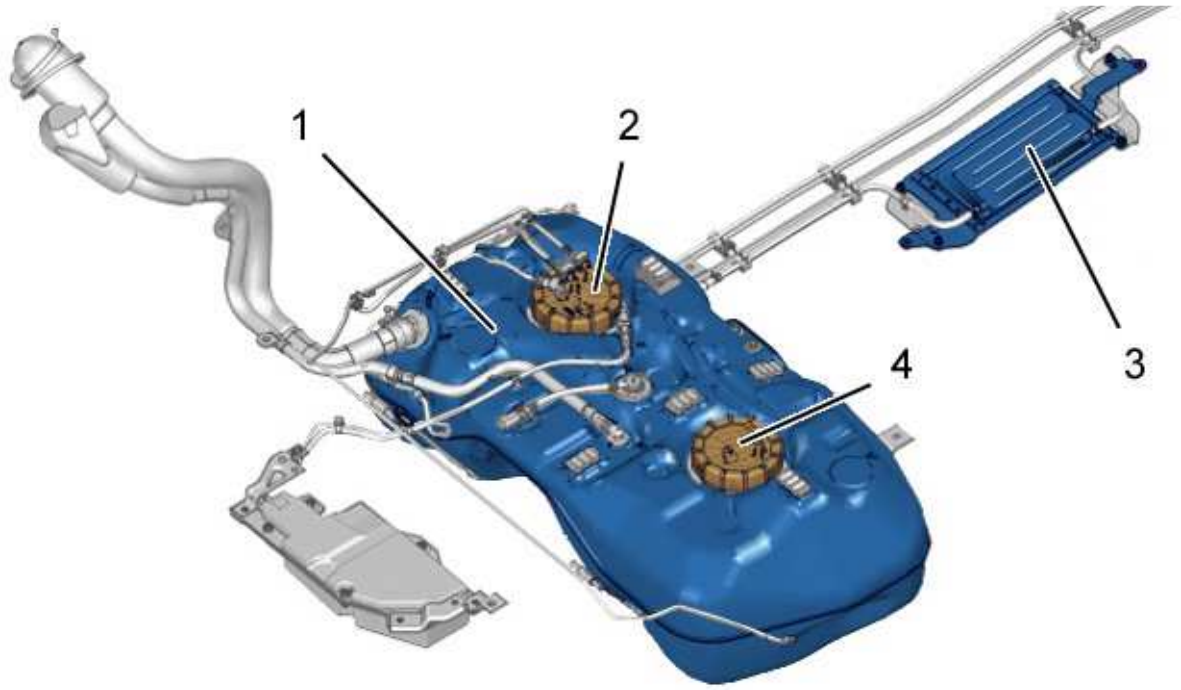

b1hb18nd

(1) Fuel tank .

(2) Primary gauge pump module.

(3) Fuel cooler (under the bodyshell).

(4) Secondary fuel gauge (*).

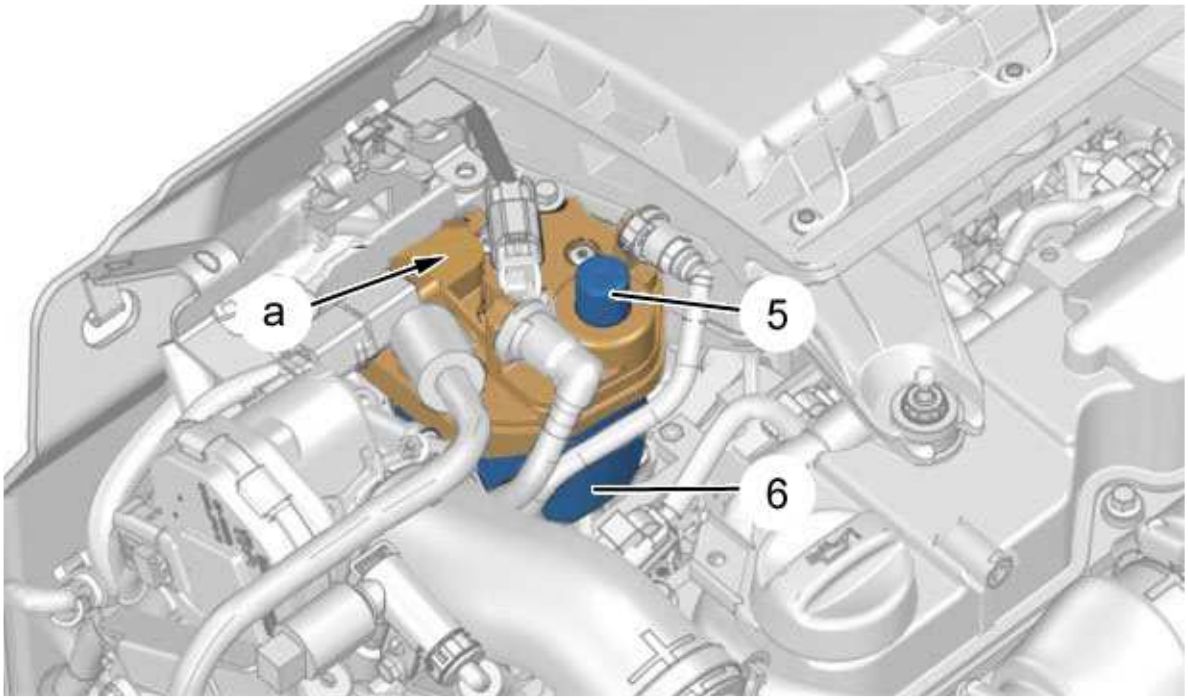

b1hb18md

(5) Manual priming pump.

(6) Fuel filter body.

"a" Fuel heater (Fuel heating function incorporated in the fuel filter housing).

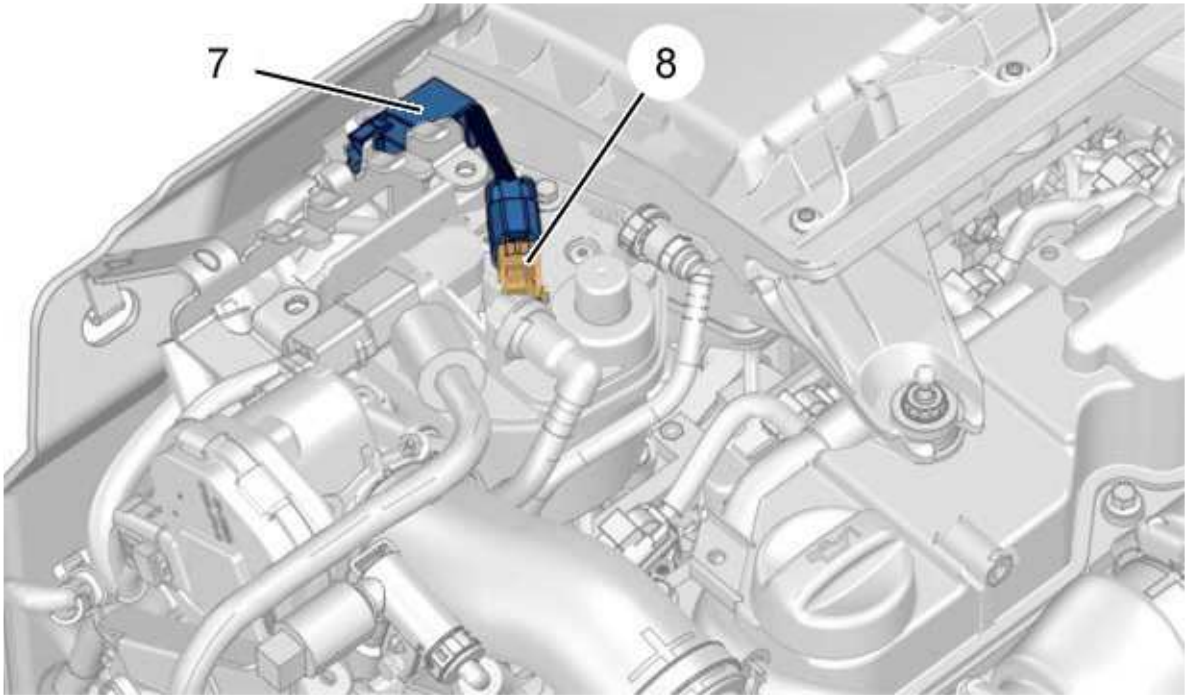

b1hb18od

(7) Conditioner/Water in diesel sensor (*).

(8) Bleeding the fuel filter (Integral water-in-diesel-fuel sensor) (*).

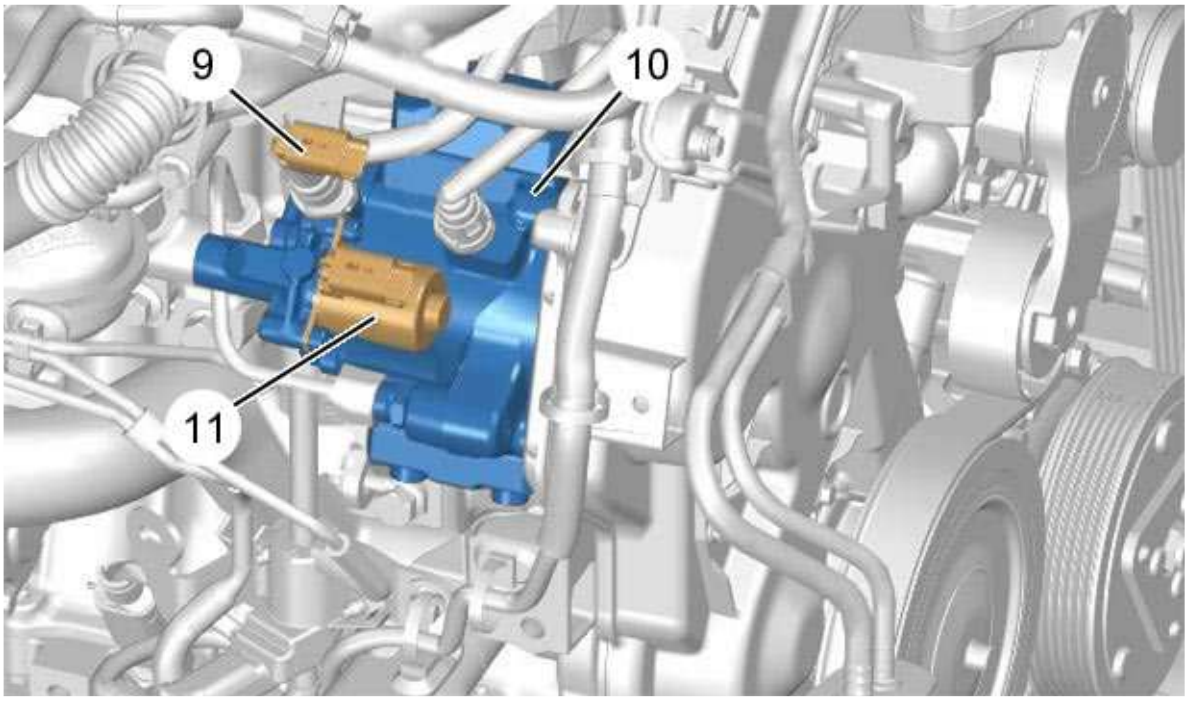

b1hb18pd

(9) Fuel temperature sensor.

(10) Fuel high pressure injection pump.

(11) Fuel flow regulator.

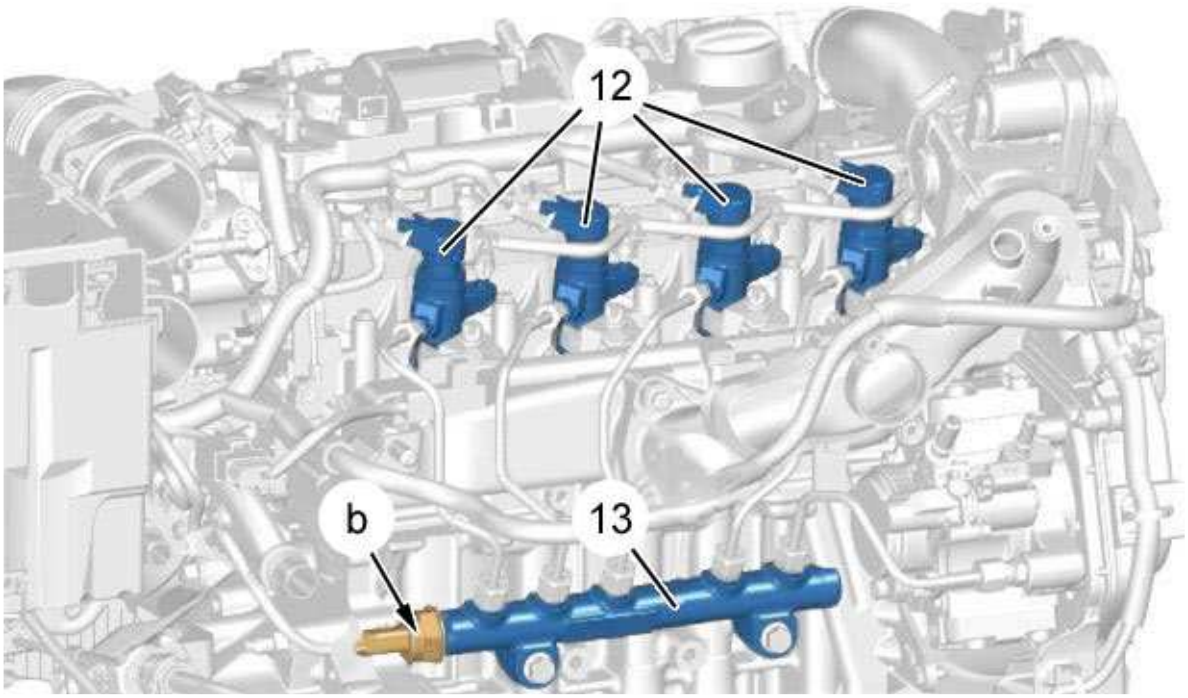

b1hb18qd

(12) Diesel injectors (1, 2, 3, 4).

(13) Fuel high pressure common injection rail .

"b" High pressure fuel sensor .

LOCATION : COMPONENTS OF THE FUEL ADDITIVE SYSTEM

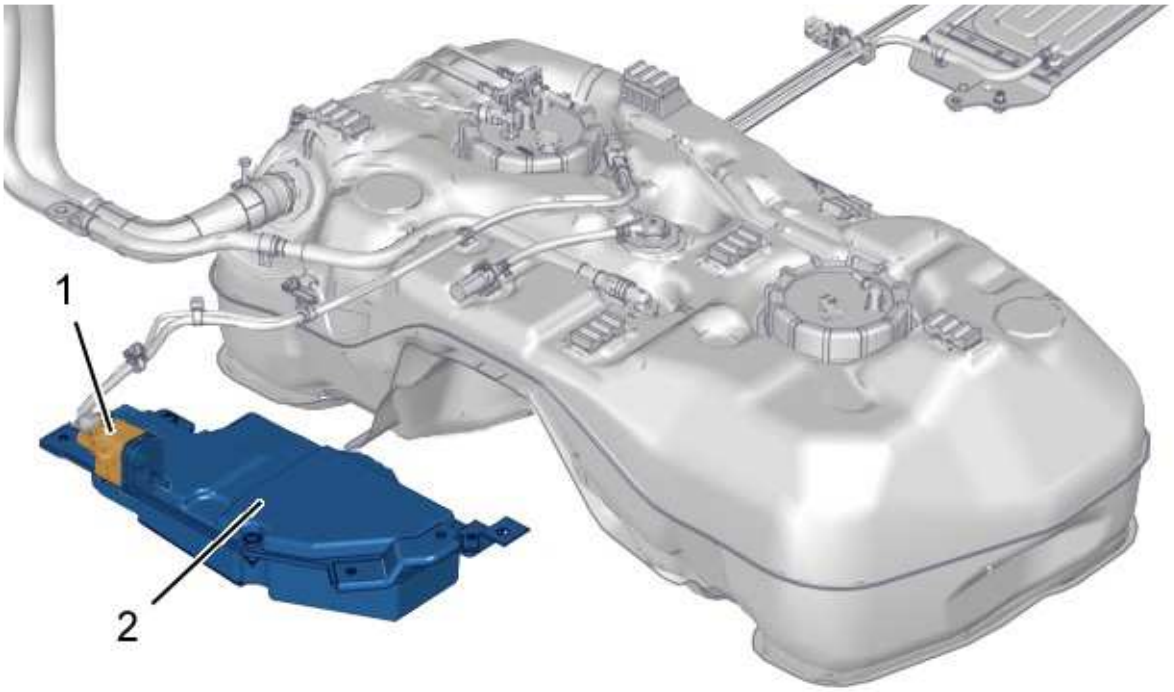

b1hb16td

(1) Fuel additive adding pump.

(2) Fuel additive tank.

LOCATION : COMPONENTS OF THE AIR CIRCUIT

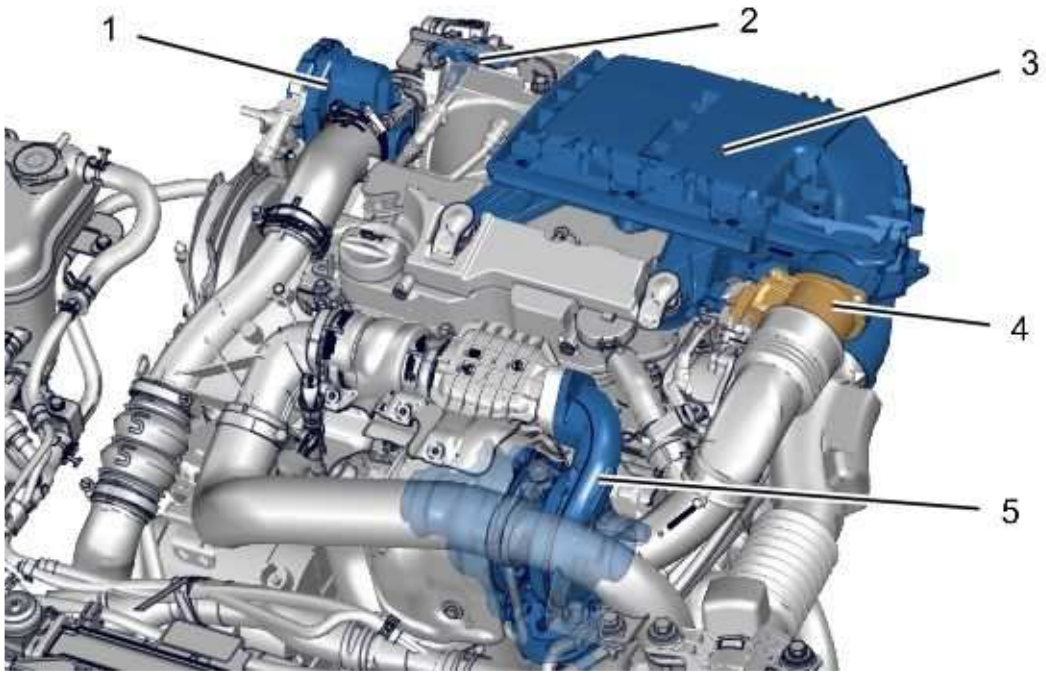

b1hb16md

(1) Inlet air metering unit .

(2) Inlet air pressure and temperature sensor.

(3) Air cleaner .

(4) Air flowmeter by mass.

(5) Variable geometry turbocharger.

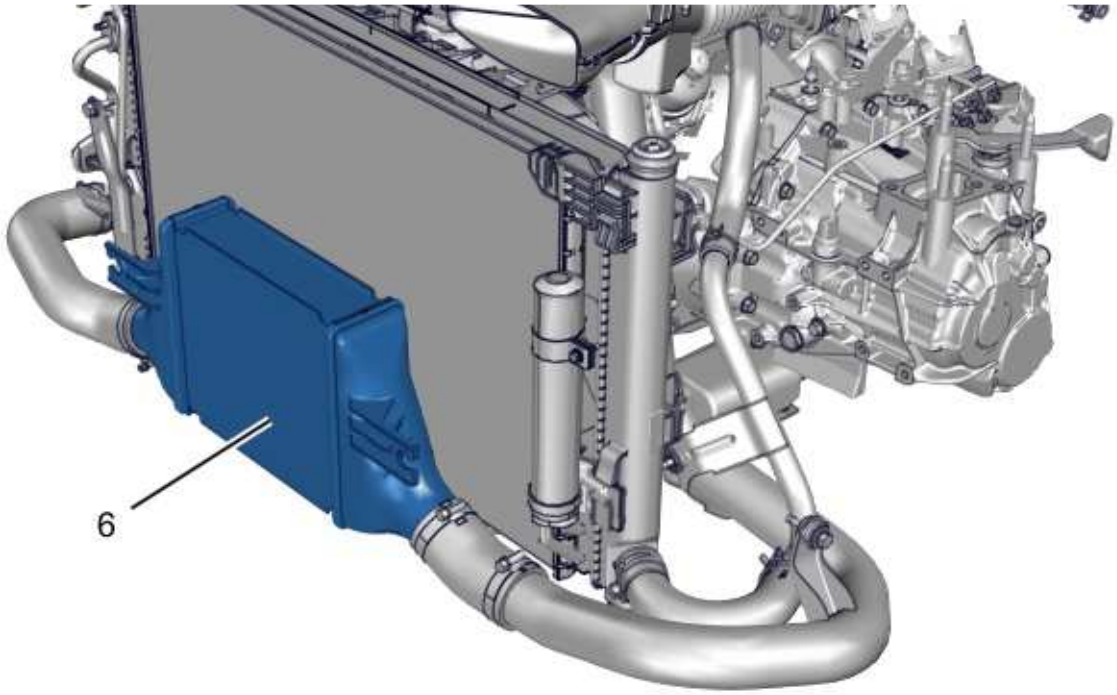

b1hb16nd

(6) Turbocharger air cooler.

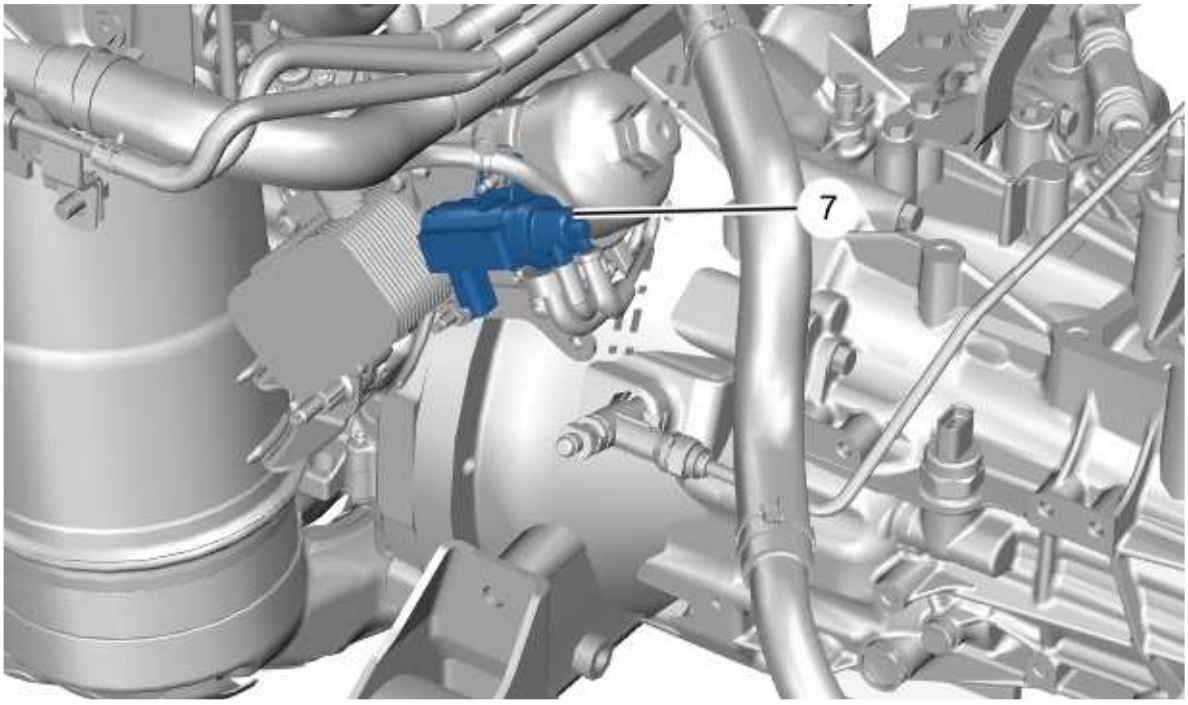

b1hb16od

(7) Proportional electrovalve controlling the variable resistance turbocharger.

LOCATION : COMPONENTS OF THE EXHAUST AND PARTICLE FILTER CIRCUIT

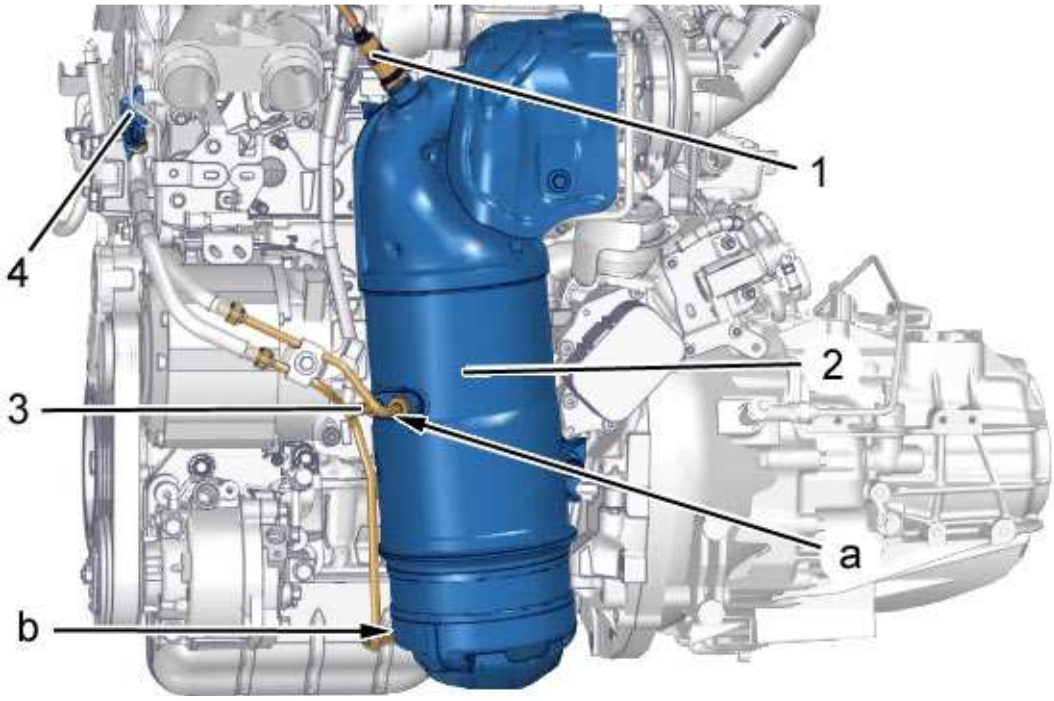

b1bb1kgd

(1) Oxygen sensor.

(2) Catalytic converter/monobloc particle emission filter assembly.

(3) Particle filter upstream temperature sensor.

(4) Particle filter differential pressure sensor.

"a" Pressure take-off downstream of the particle filter.

"b" Pressure take-off upstream of the particle filter.

LOCATION : COMPONENTS OF THE EXHAUST GAS RECYCLING SYSTEM (EGR)

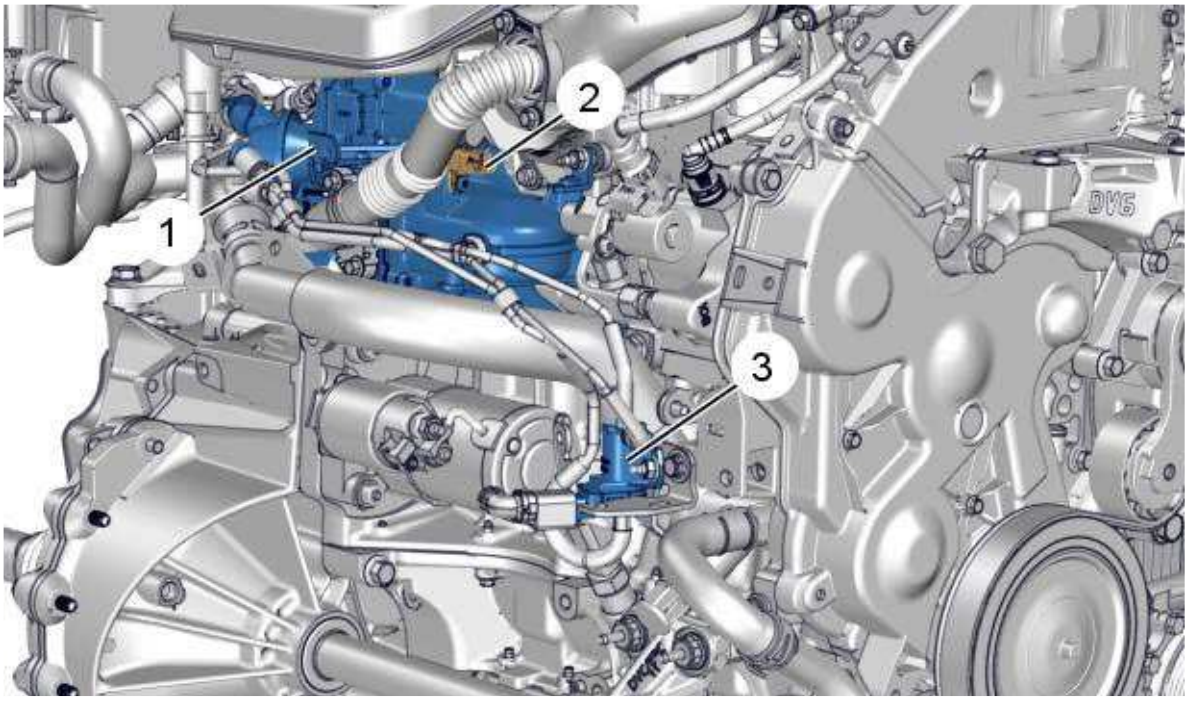

b1hb0aod

(1) Exhaust gas recycling module :

- Electrically-controlled exhaust gas recycling valve
- Exhaust gas recirculation heat exchanger
- Pneumatic exhaust gas recycling heat exchanger bypass flap

(2) Position copy sensor for the EGR heat exchanger by-pass flap .

(3) Control electrovalve for the EGR heat exchanger by-pass .

LOCATION : COMPONENTS OF THE ENGINE COOLING SYSTEM

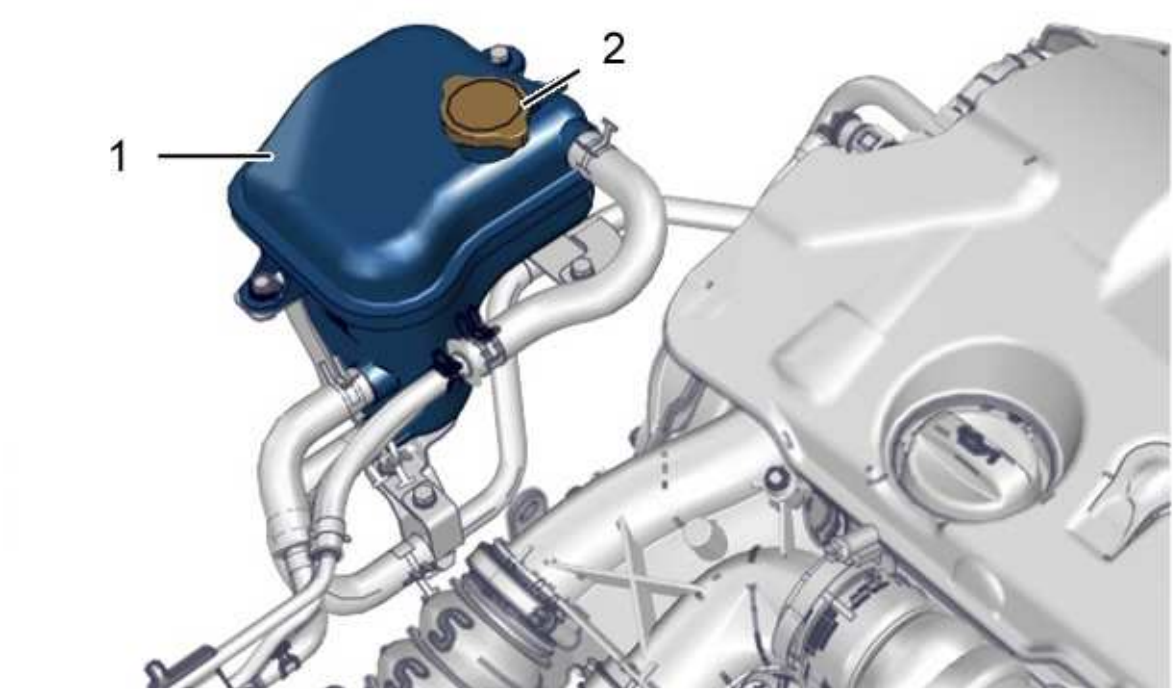

b1hb16ad

(1) Header tank.

(2) Header tank cap.

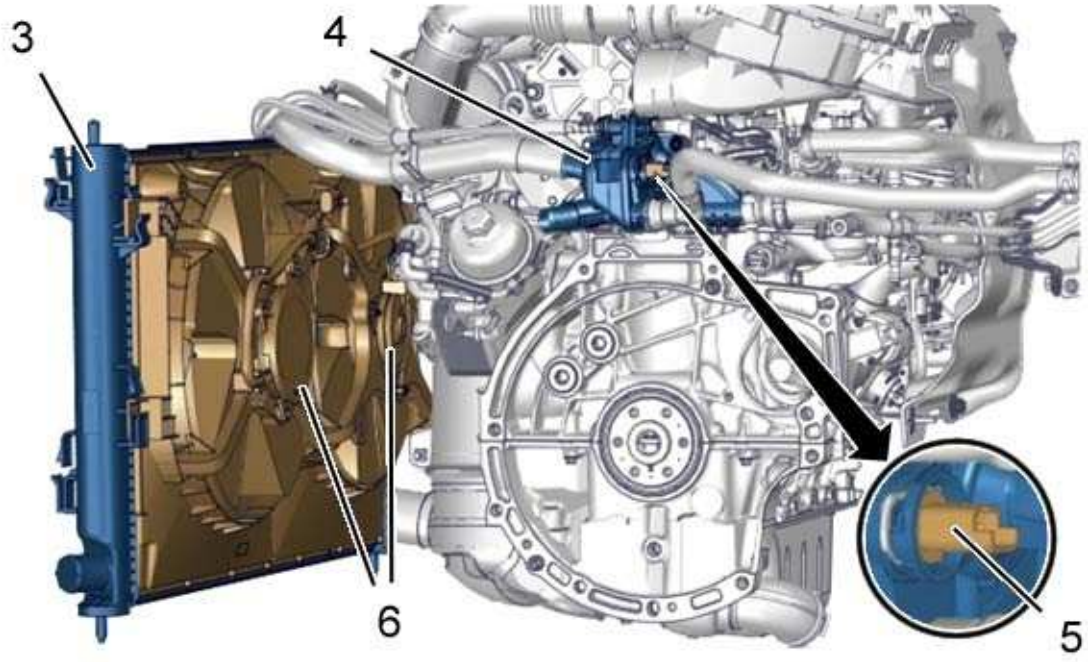

b1hb16bd

(3) Cooling radiator.

(4) Coolant outlet housing .

(5) Water temperature sensor.

(6) electric cooling fan unit.

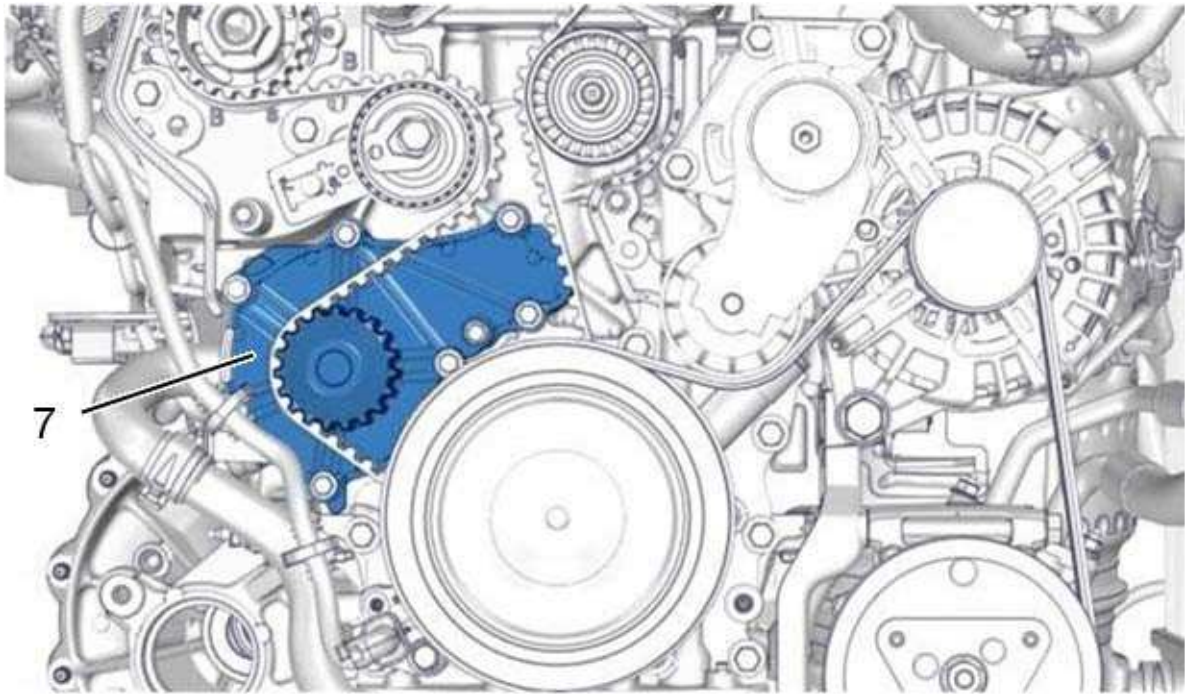

b1hb16cd

(7) Coolant pump .

LOCATION : IDENTIFICATION OF AIR CONDITIONING CIRCUIT COMPONENTS

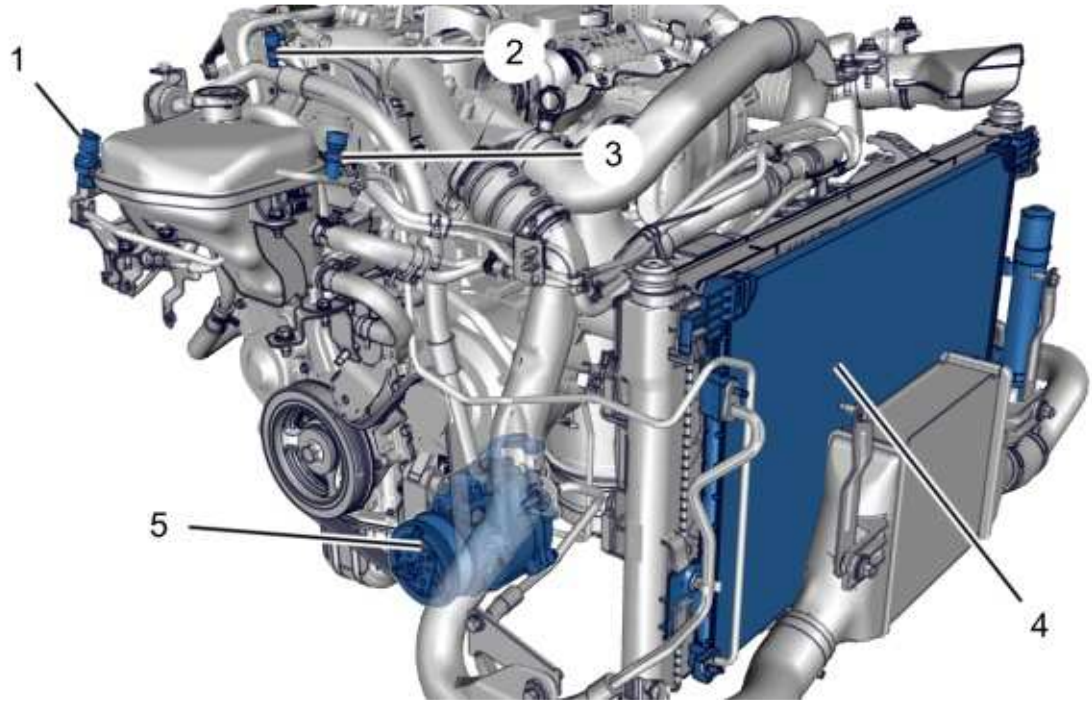

b1hb16vd

(1) Aircon fluid pressure sensor.

(2) Low pressure charge valve.

(3) High pressure charge valve.

(4) Cooling condensor.

(5) Air conditioning compressor .

LOCATION : COMPONENTS OF THE LUBRICATION CIRCUIT

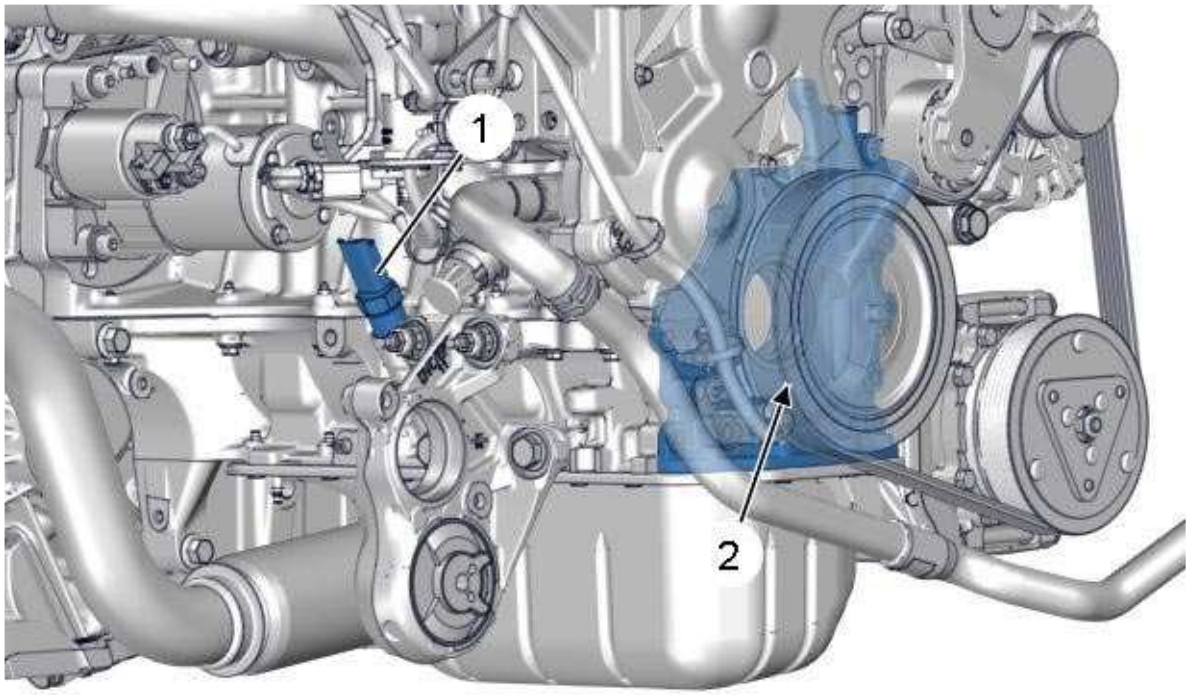

b1hb08cd

(1) Engine oil level sensor.

(2) oil pump.

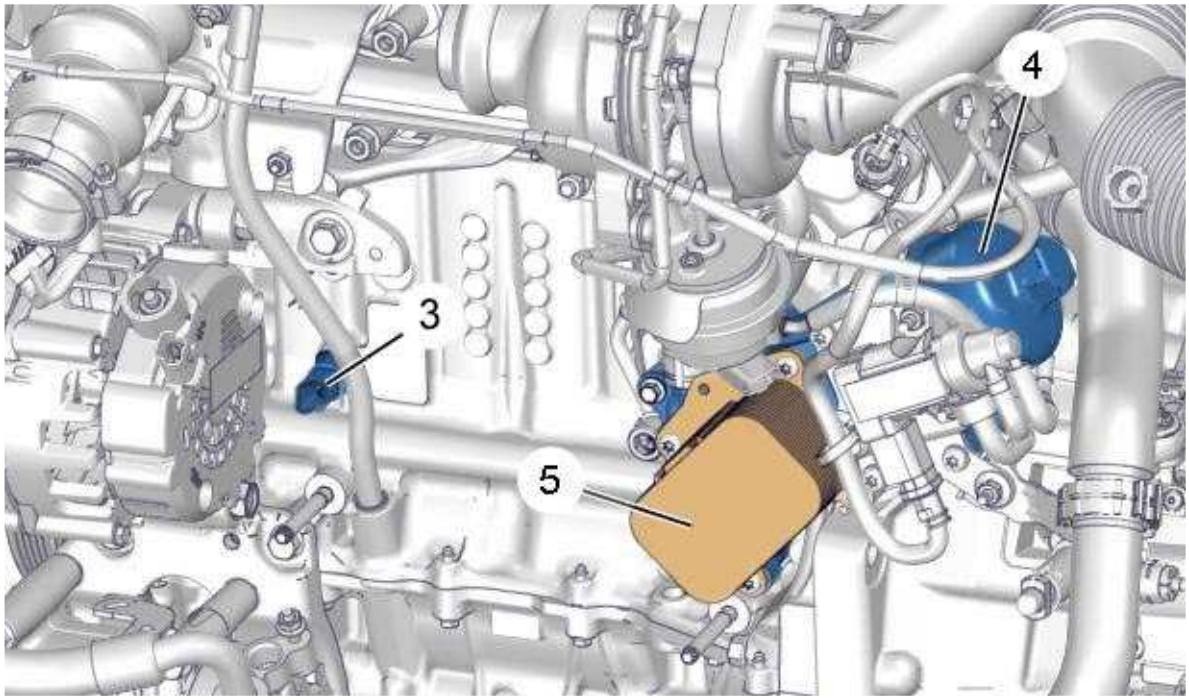

b1hb08dd

(3) Oil pressure switch.

(4) Oil filter support.

(5) Oil cooler.

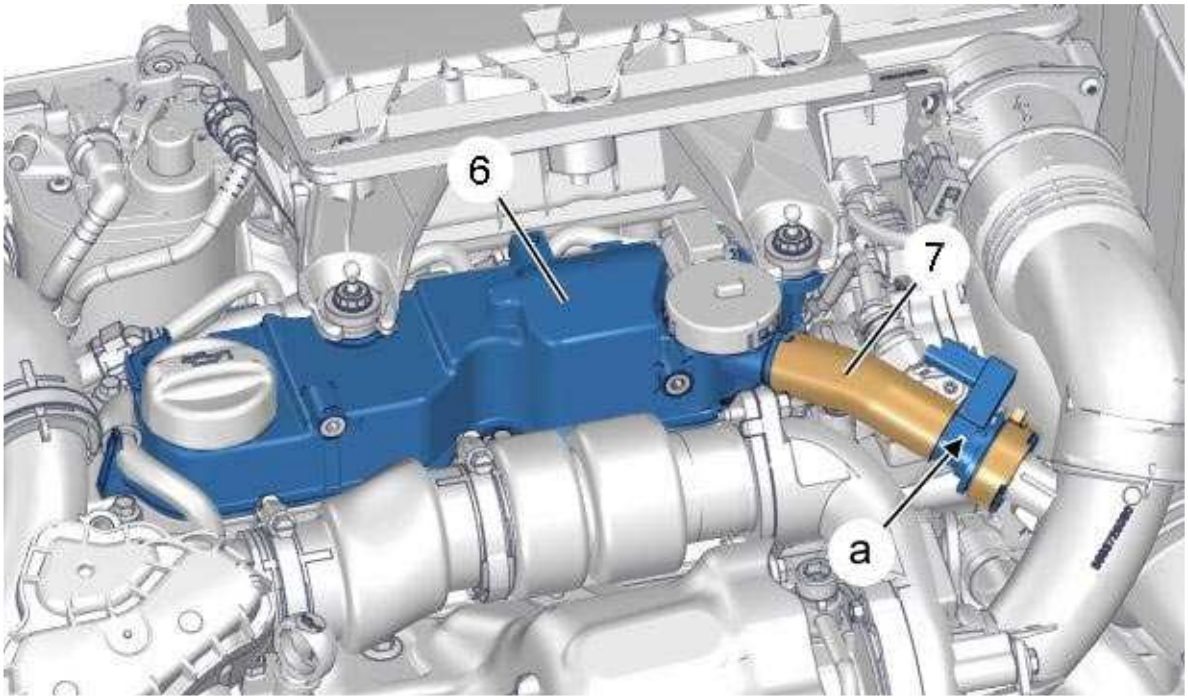

b1hb08ed

(6) Oil vapour decanter.

(7) Crankcase breather hose.

"a" Oil vapour (blow-by) heater incorporated in the oil vapour resuction pipe (according to model).

LOCATION : CYLINDER REFERENCE SENSOR

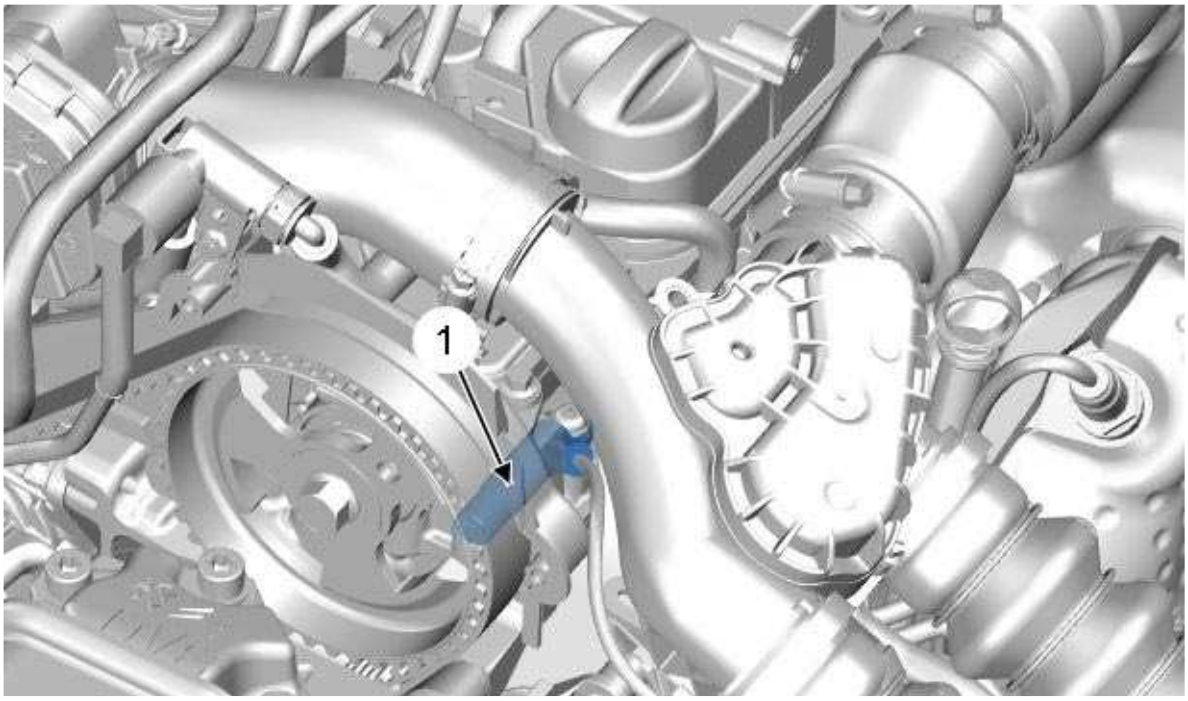

b1hb083d

(1) Cylinder reference sensor .

LOCATION : COMPONENTS OF THE VACUUM CIRCUIT

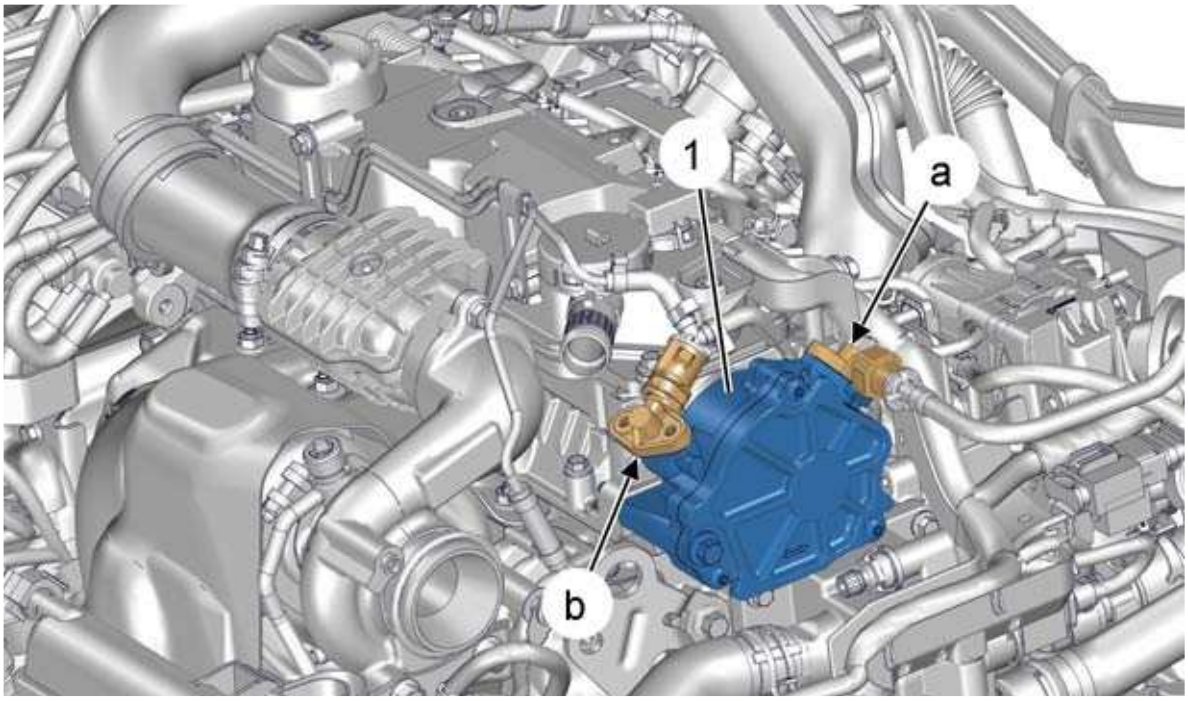

b1hb0d0d

(1) vacuum pump.

"a" Output to the brake servo unit.

"b" Outlet to electrovalves :

- Turbocharger discharge valve control regulated solenoid valve
- Discharge (by-pass) circuit control electrovalve of the exhaust gas recirculation heat exchanger

LOCATION : COMPONENTS OF THE BATTERY CHARGING CIRCUIT

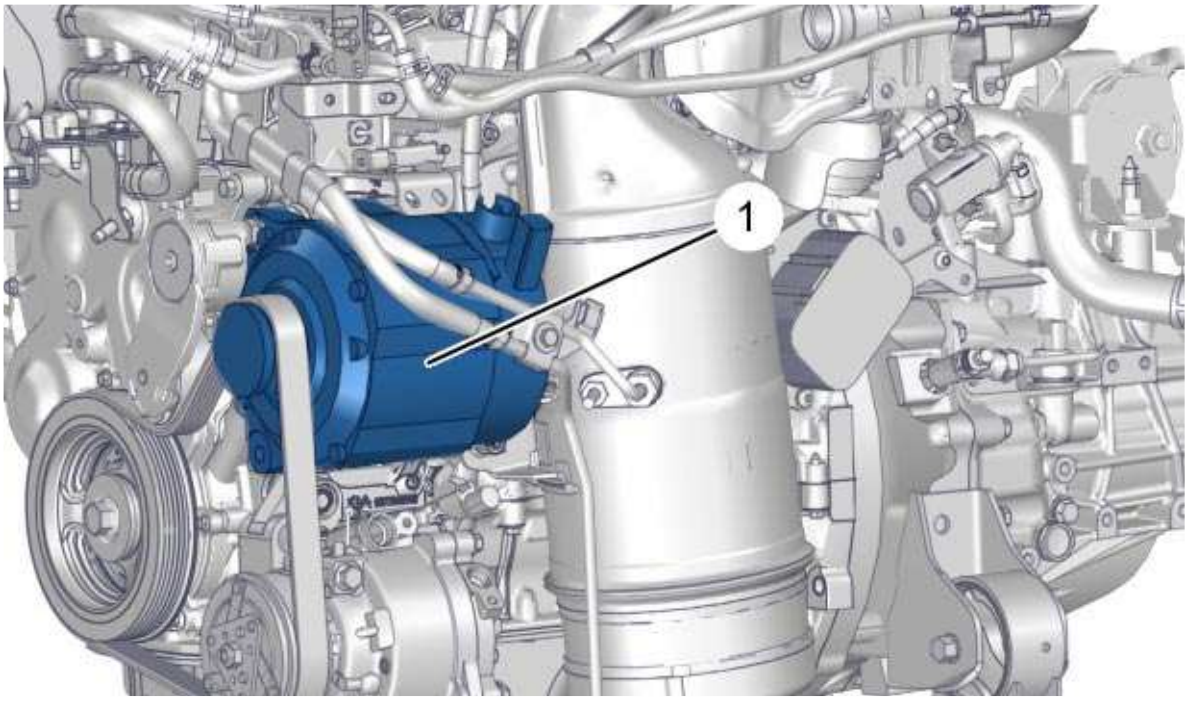

b1hb16qd

(1) Piloted alternator.

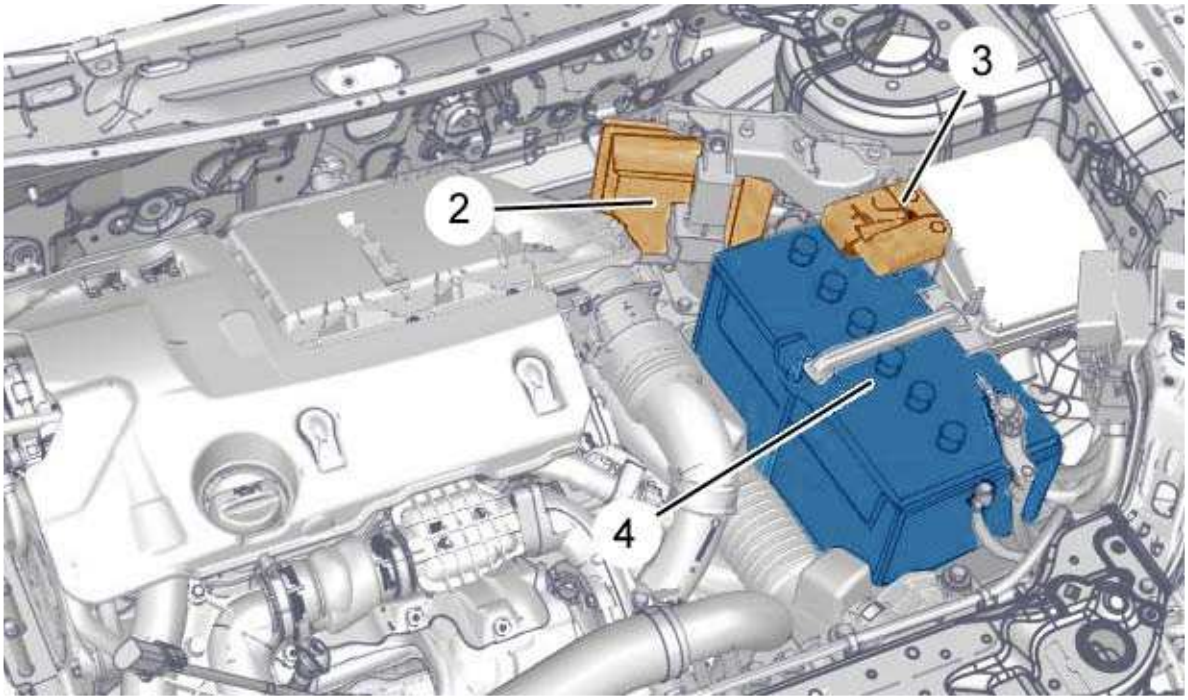

b1hb16rd

(2) Engine ECU.

(3) Battery charge status unit.

(4) Ancillaries battery.

DESCRIPTION - OPERATION : WATER PRESENT IN DIESEL SENSOR

1 - DESCRIPTION

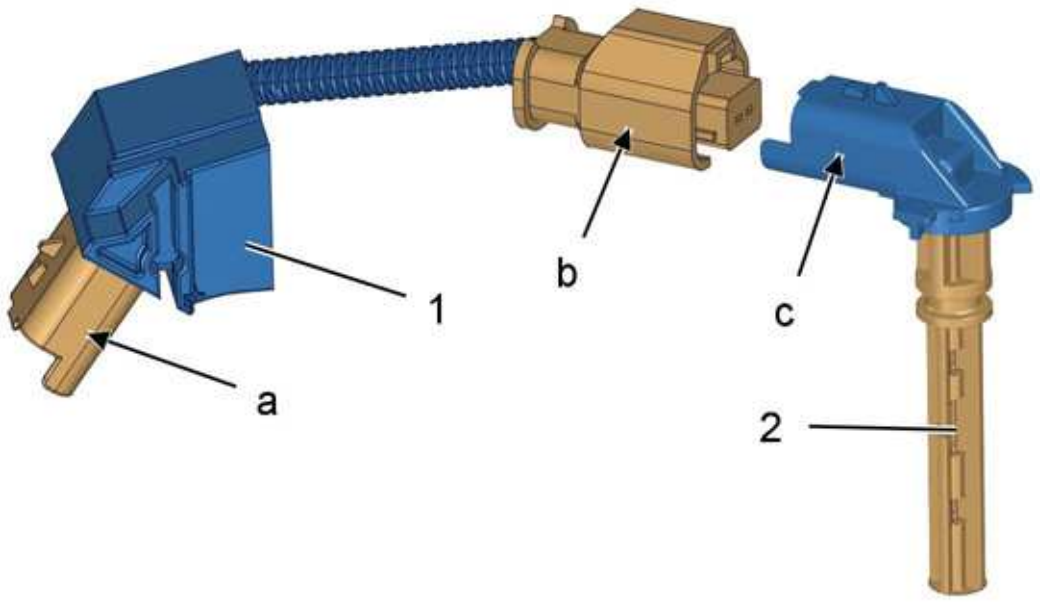

b1ha0efd

(1) Water present in diesel sensor .

(2) Water detector .

"a" 3 way blue connector .

"b" 2 way blue connector .

"c" 1-way blue connector .

2 - ROLE

The sensor informs the engine ECU of the presence of water in the diesel fuel .

3 - OPERATION

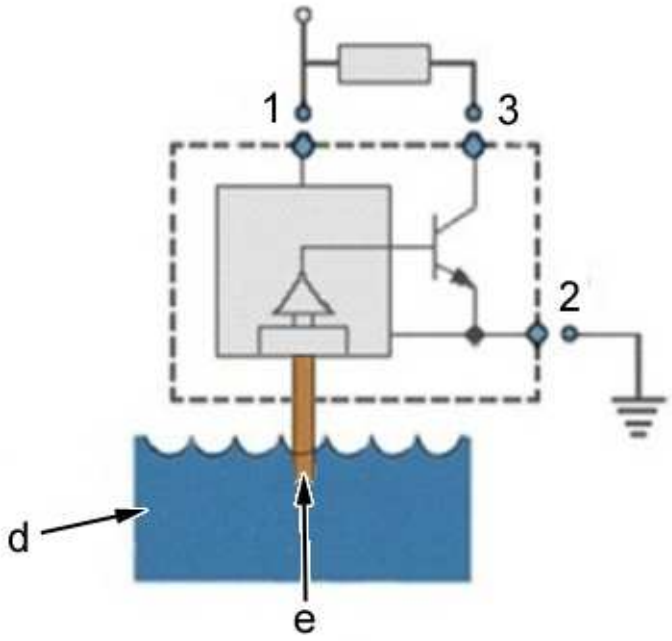

b1ha0egd

"d" Water .

"e" Electrode .

1, 2, 3 Terminals of connector "a" .

The presence of water in the diesel fuel signal is transmitted to the engine ECU, when the water comes into contact with the electrode .

4 - ELECTRICAL SPECIFICATIONS

Description	Value	Unit
Supply voltage	13,5 (+ 2,5 ; - 3,5)	V
Diesel temperature (Use)	Diesel fuel temperature between -30 and +125°C	°C
Output voltage, without detection of water in the diesel fuel	7 or above	V
Output voltage, with detection of water in the diesel fuel	1,7 or below	V

Output specification of the water presence sensor for a supply voltage of 13,5V .

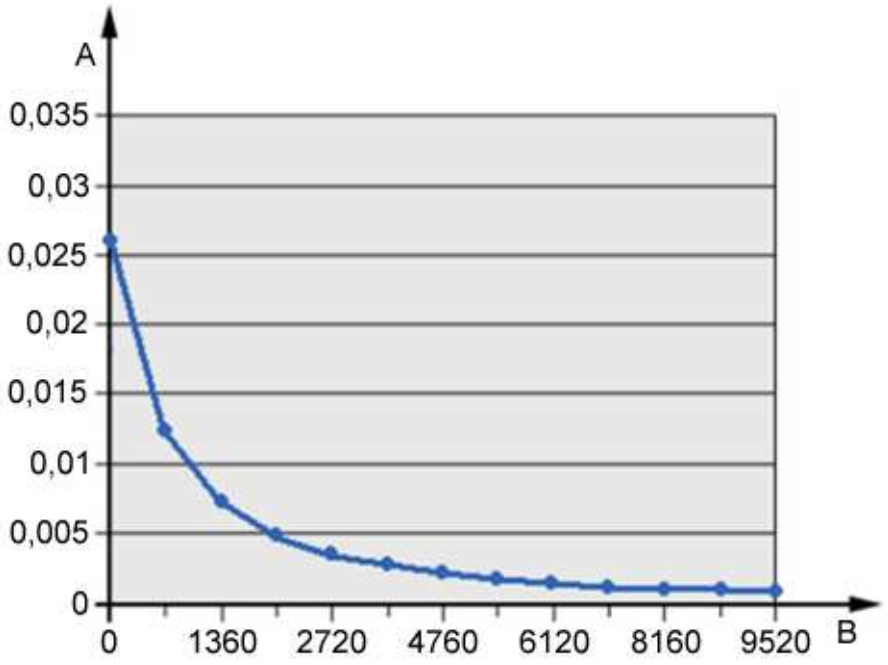

b1ha0ehd

"A" Current (A) .

"B" Resistance (Ohms) .

4 - 1 - Water in diesel fuel sensor connector

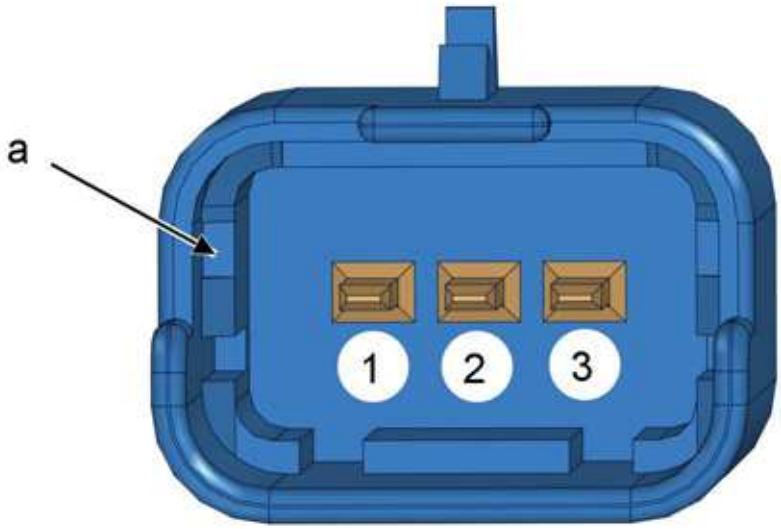

d2aa058d

"a" 3 way blue connector	
Channel number	Allocation of the tracks of the connector
1	Battery positive
2	Earth
3	Water in diesel information

4 - 2 - Water in diesel fuel sensor union connector / Water detector

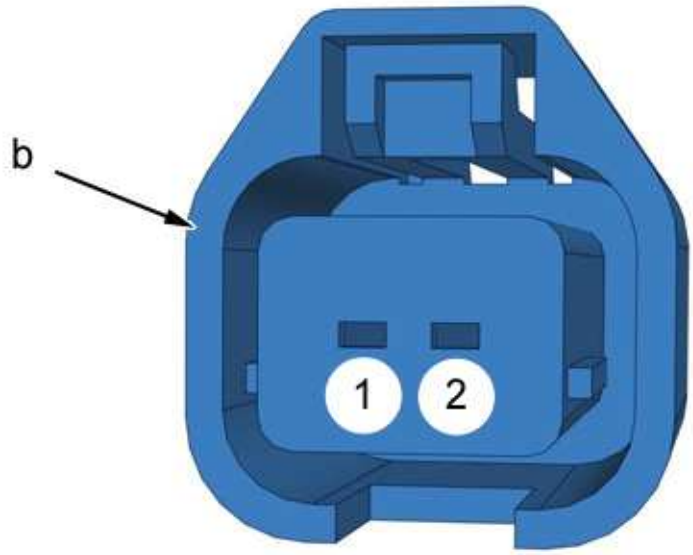

d2aa059d

"b" 2 way blue connector	
Channel number	Allocation of the tracks of the connector
1	Electrode
2	Not used

4 - 3 - Water detector connector

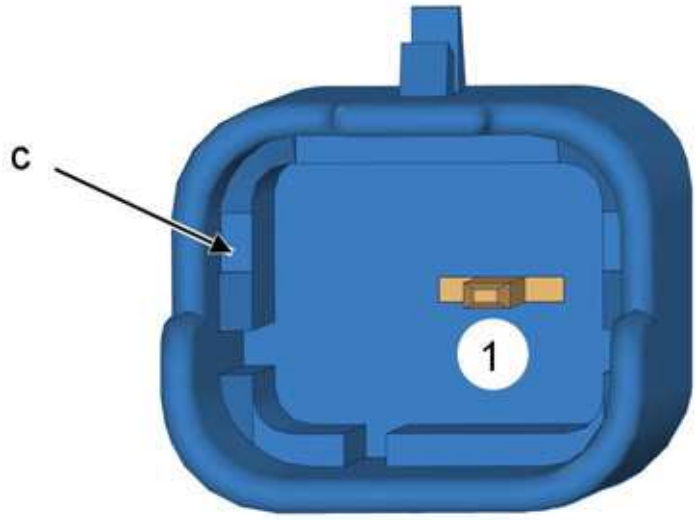

d2aa05ad

"c" 1-way blue connector	
Channel number	Allocation of the tracks of the connector
1	Electrode

5 - PROGRAMMING/INITIALISATION

Not applicable .

DESCRIPTION - OPERATION : DIESEL FUEL TEMPERATURE SENSOR

1 - DESCRIPTION

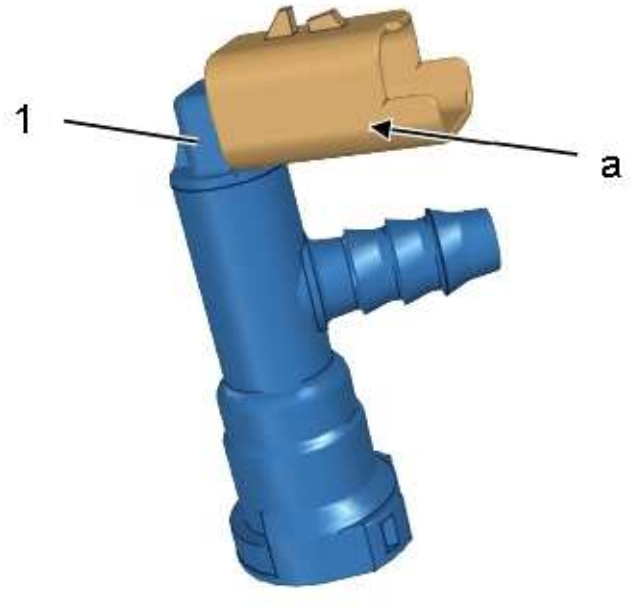

d2aa028d

(1) Diesel fuel temperature sensor .

"a" 2-way black connector .

Supplier : NOBEL PLASTIQUES .

The sensor is a resistive, negative temperature coefficient (CTN), sensor .

2 - ROLE

Diesel fuel temperature sensor :

- The sensor informs the ECU about the temperature of the diesel fuel
- The fuel temperature sensor contributes to the thermal protection of the engine
- After receiving the fuel temperature information, the engine management ECU establishes an estimate of the temperature and viscosity of the diesel fuel at the injector outlet

3 - OPERATION

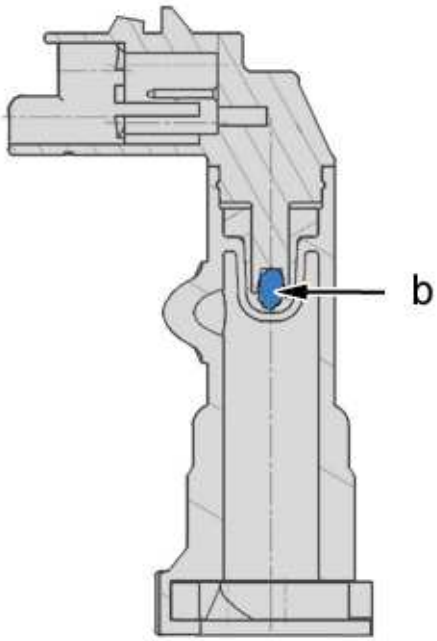

d2aa029d

"b" Resistance CTN (Negative Temperature Coefficient) .

The NTC (Negative Temperature Coefficient) resistance value "R" changes in relation to the change in the temperature "T" :

- When the temperature "T" increases, the resistance value "R" decreases
- When the temperature "T" decreases, the resistance value "R" increases

4 - ELECTRICAL SPECIFICATIONS

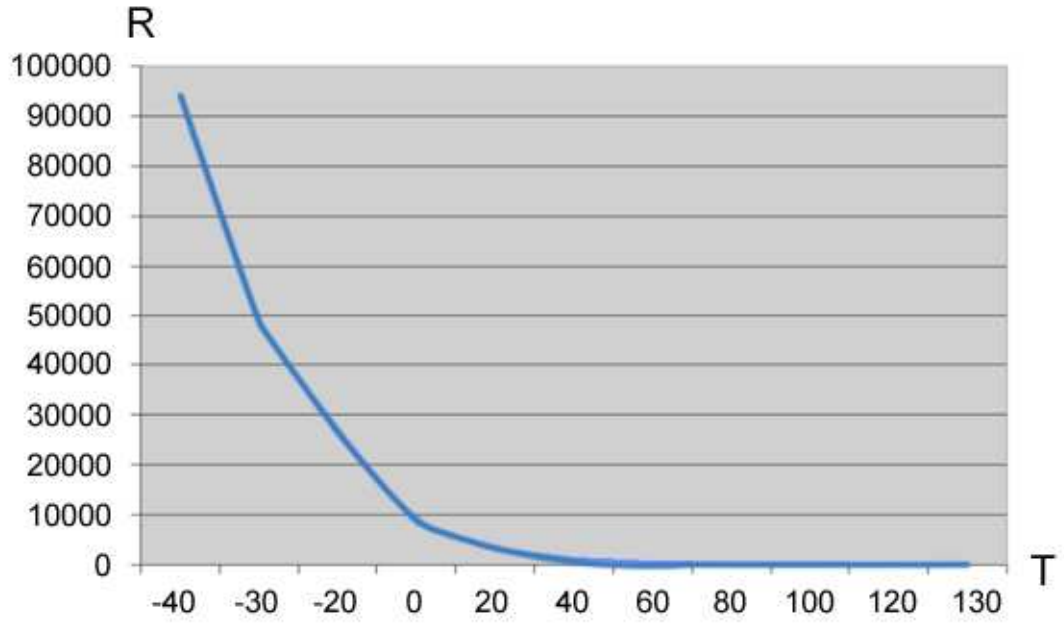

d4ea0fbd

"R" Resistance R (ohm) .

"T" Diesel fuel temperature (°C) .

Temperature (°C)	Minimum resistance (Ohms)	Nominal resistance	Maximum resistance (Ohms)
-40	79000,1	94267,5	109535,4
-30	41255	48406	55556,9
-20	22394,3	25910,5	29426,7
0	7351,1	8299,5	9247,9
20	2742,7	3033	3323,5
40	1141,5	1240	1338,7
60	522,2	558,5	595,2
80	259,2	273,5	288
100	138,1	144	150
120	77,9	81	83,6
130	59	61,5	64

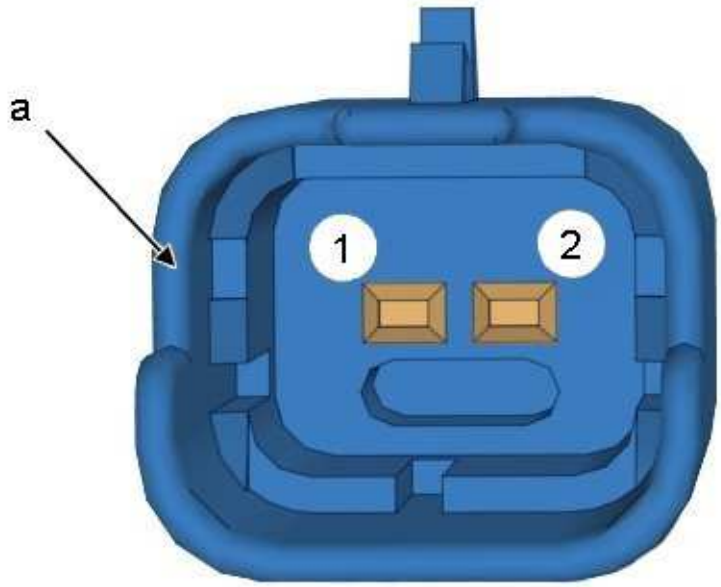

d2aa02ad

"a" 2-way black connector	
Channel number	Allocation of the tracks of the connector
1	Earth
2	Information : Diesel fuel temperature sensor

5 - PROGRAMMING/INITIALISATION

Not applicable .

DESCRIPTION - OPERATION : DIESEL FUEL HIGH PRESSURE SENSOR

1 - DESCRIPTION

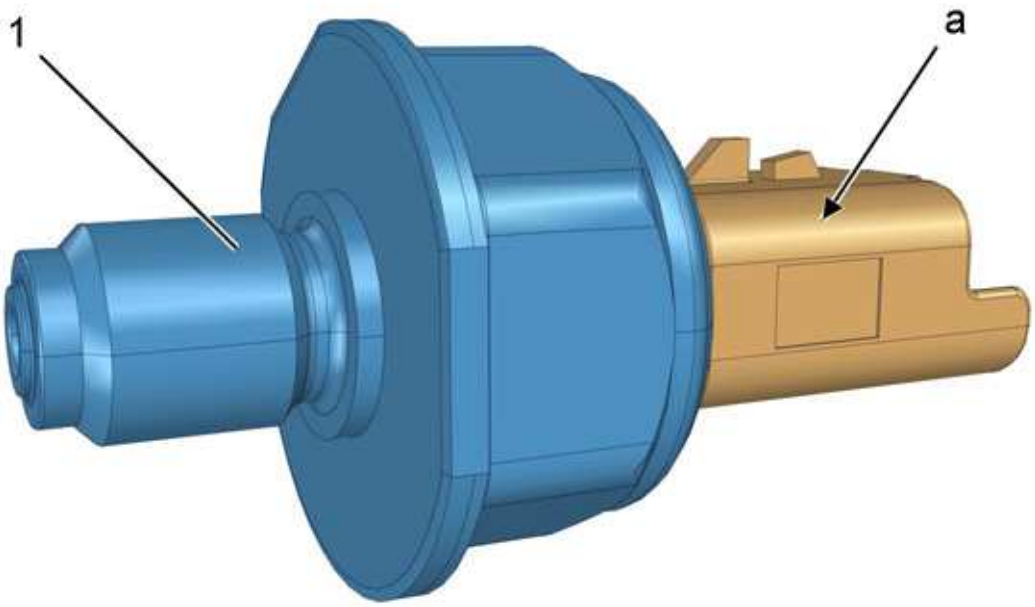

d2aa00ad

(1) Diesel fuel high pressure sensor .

"a" 3-way black connector .

The diesel fuel high pressure sensor is of the piezo-resistive type .

Supplier : SENSATA .

2 - ROLE

The sensor measures the value of the high pressure in the fuel high pressure common injection rail .

3 - OPERATION

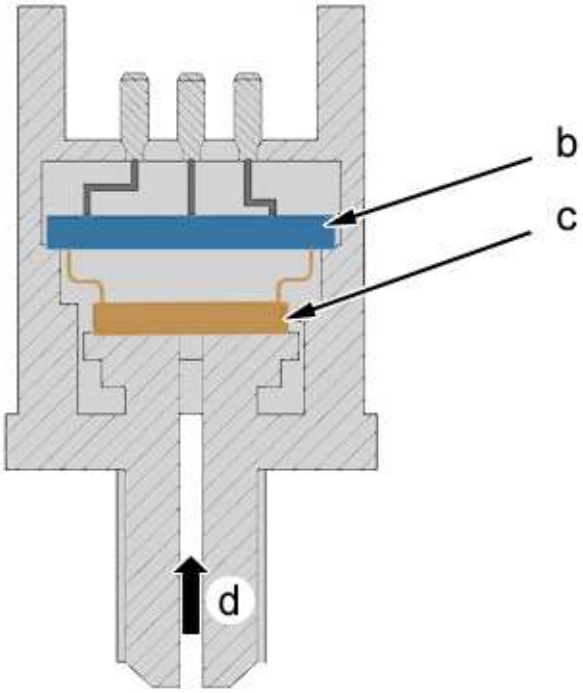

b1ha0akd

"b" Resistive plate .

"c" Diaphragm .

"d" Entry of the diesel fuel into the sensor .

The sensor is a passive sensor with integral electronics, supplied by the engine ECU (At + 5V) .

The resistance of the sensor varies as a function of the pressure applied on its diaphragm (The more the pressure increases, the more its resistance increases) .

4 - ELECTRICAL SPECIFICATIONS

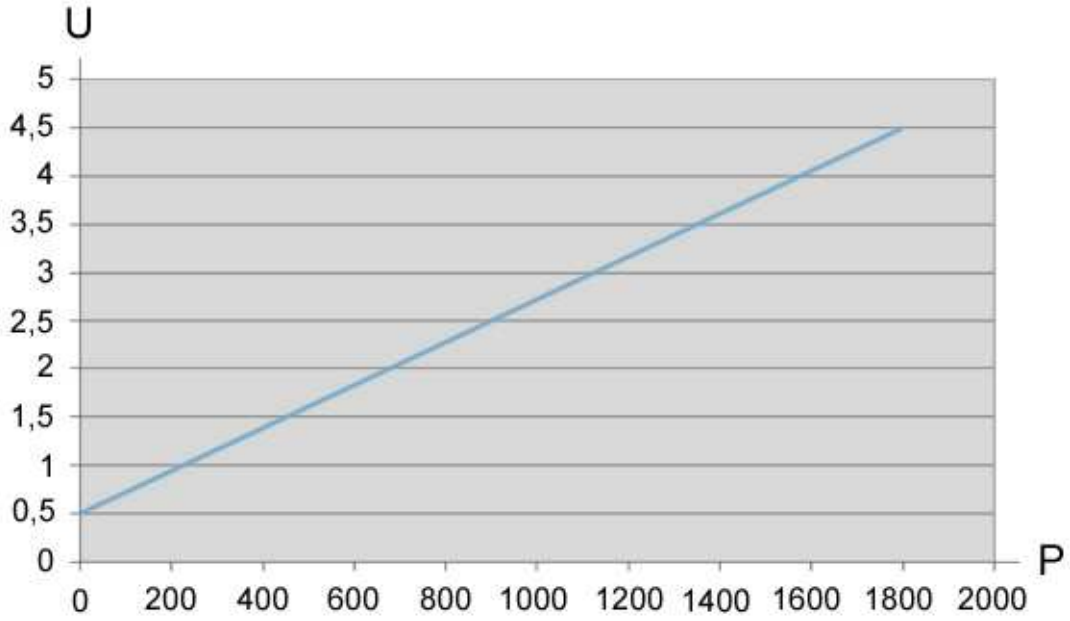

d4ea0f4d

"U" Output voltage of the diesel fuel high pressure sensor for a supply voltage of 5V (volts) .

"P" Pressure of the fuel in the fuel injection rail (bar) .

The output voltage of the diesel fuel high pressure sensor is proportional to the pressure of the fuel in the fuel high pressure common injection rail .

Description	Value	Unit
Supply voltage	5 ± 0,25	V
Supply current	10	mA
Pressure range measured	0 ≤ Pressure measured ≤ 1800	Bar
Maximum pressure admissible without irreversibly damaging the operation of the sensor	2500	Bar
Maximum pressure admissible without mechanically destroying the sensor	3000	Bar

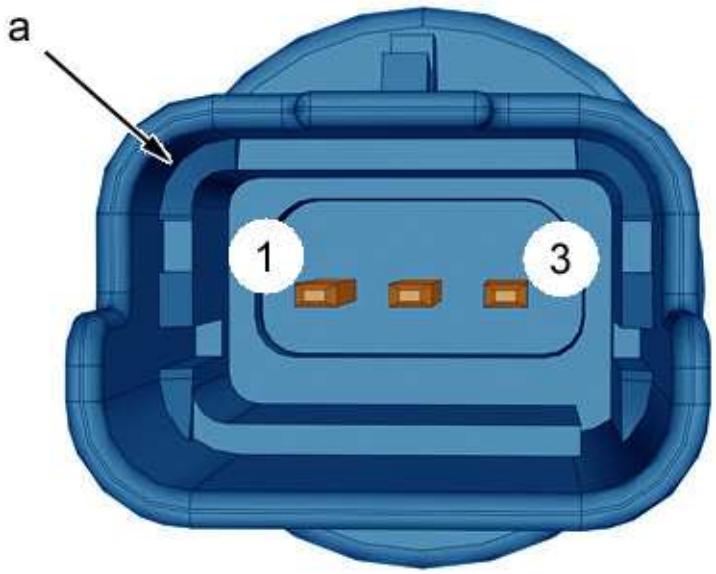

d2aa00bd

"a" 3-way black connector	
Channel number	Allocation of the tracks of the connector
1	Output signal
2	Earth
3	Supply voltage

5 - INITIALISATION / INITIALISATION

Programming is necessary if the part is removed/refitted ; Refer to the diagnostic tools documentation : Programming/initialisation .

DESCRIPTION - OPERATION : AIR FLOW METER

1 - DESCRIPTION

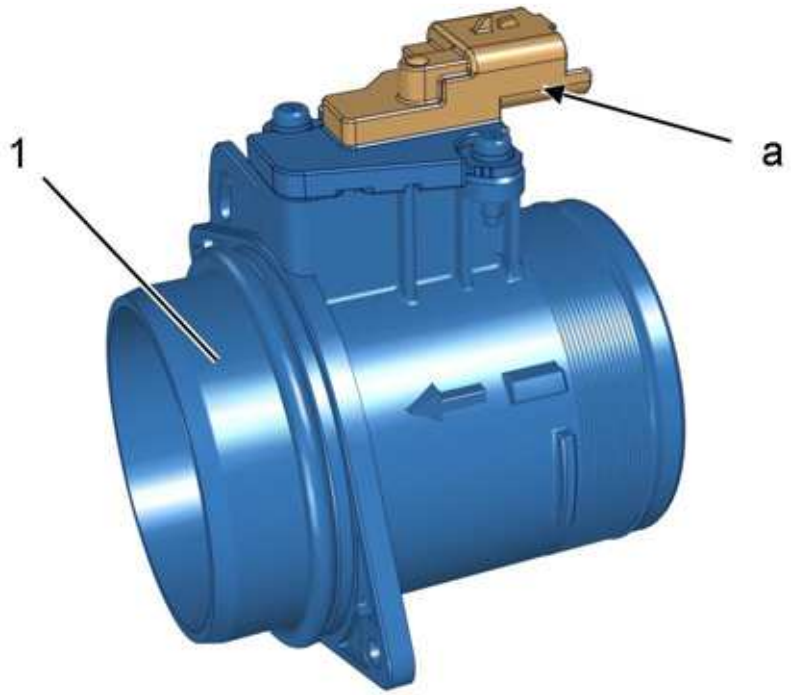

b1ha0bkd

(1) Air flow meter.

"a" 4 way grey connector.

2 - ROLE

Role of the air flowmeter :

- To measure the quantity of air admitted by the air intake
- To measure the temperature of the air admitted

3 - OPERATION

3 - 1 - Inlet air flow

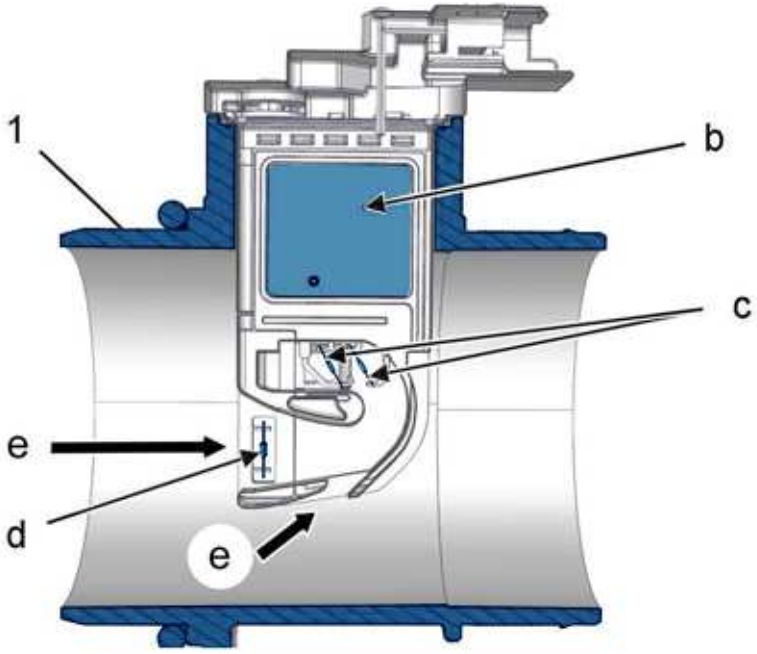

b1ha0bld

(1) Air flow meter.

"b" Electronic stage.

"c" Detection cell.

"d" Temperature sensor.

"e" Entrance of the measuring channel.

The flow of air traverses the measuring channel then passes through the detection cell equipped with a hot wire.

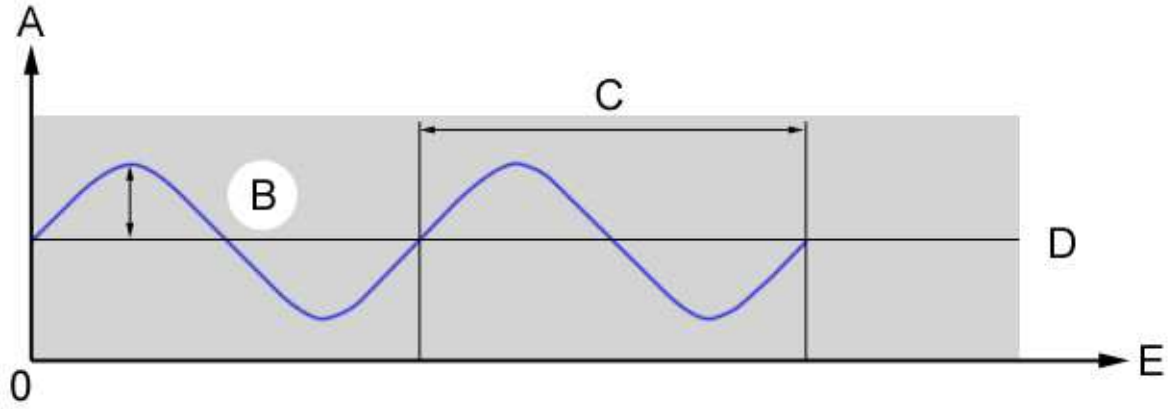

b1ha0bmd

"A" Air flow (In kg/h).

"B" Air flow variation.

"C" Period = 1 per frequency.

"D" Medium air flow.

"E" Time (in seconds).

The electronic stage measures the frequency at which the detection cell of the sensor cools on contact with the flow of air.

The greater the speed of cooling of the sensor's detection cell, the greater the flow of air.

3 - 2 - Air temperature

The blown air temperature sensor is a resistive sensor with negative temperature coefficient (NTC).

The NTC (Negative Temperature Coefficient) resistance value "R" changes in relation to the change in the temperature "T" :

- When the temperature "T" increases, the resistance value "R" decreases
- When the temperature "T" decreases, the resistance value "R" increases

4 - DATA

Description	Tolerance (Minimum)	Nominal value	Tolerance (Maximum)

Supply voltage (in volts)	10,5	13,5	16
Supply current : In milliamperes (mA) (If supply voltage = 14 V)	-	-	400

4 - 1 - Air flow

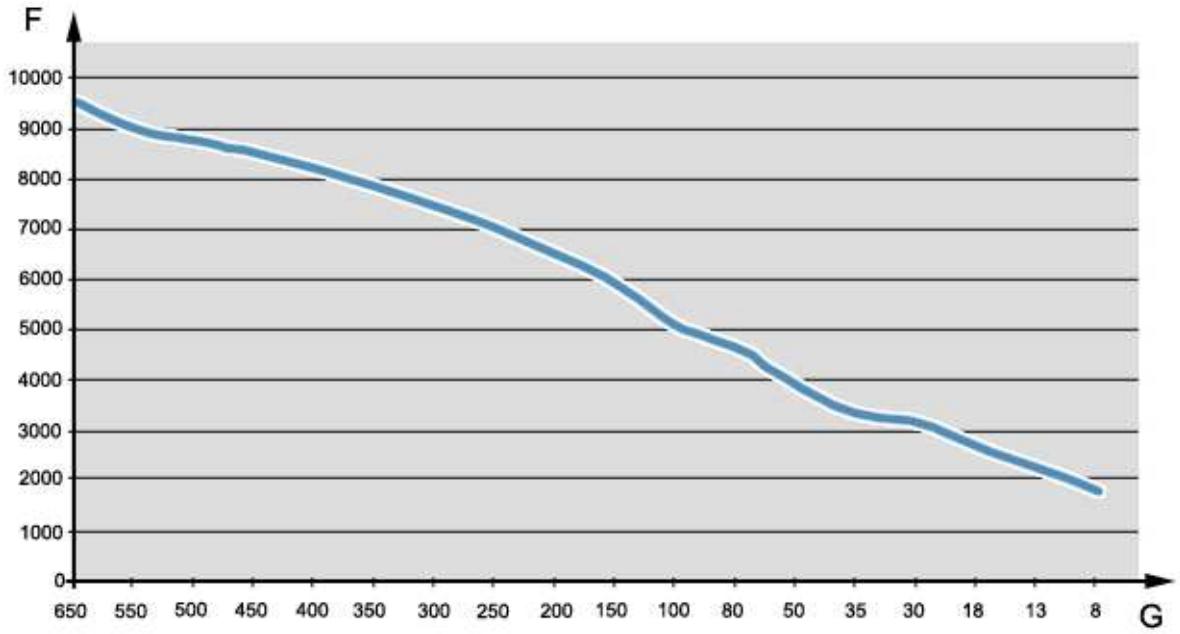

d4ea8fld

"F" Nominal frequency (In Hz).

"G" Air flow (In kg/h).

Inlet air flow (Kg/hr)	Minimum frequency (Hz)	Nominal frequency (Hz)	Maximum frequency (Hz)
650	9463	9522	9582
550	8979	9035	9091
500	8718	8771	8824
450	8436	8490	8544
400	8124	8176	8228
350	7781	7832	7882
300	7397	7446	7495
250	6963	7008	7053
200	6463	6505	6547
150	5839	5880	5920
100	5012	5051	5089
80	4598	4631	4664
50	3825	3855	3885
35	3325	3351	3377
30	3139	3159	3180
18	2567	2689	2611

13	2242	2263	2283
8	1790	1808	1826

4 - 2 - Air temperature

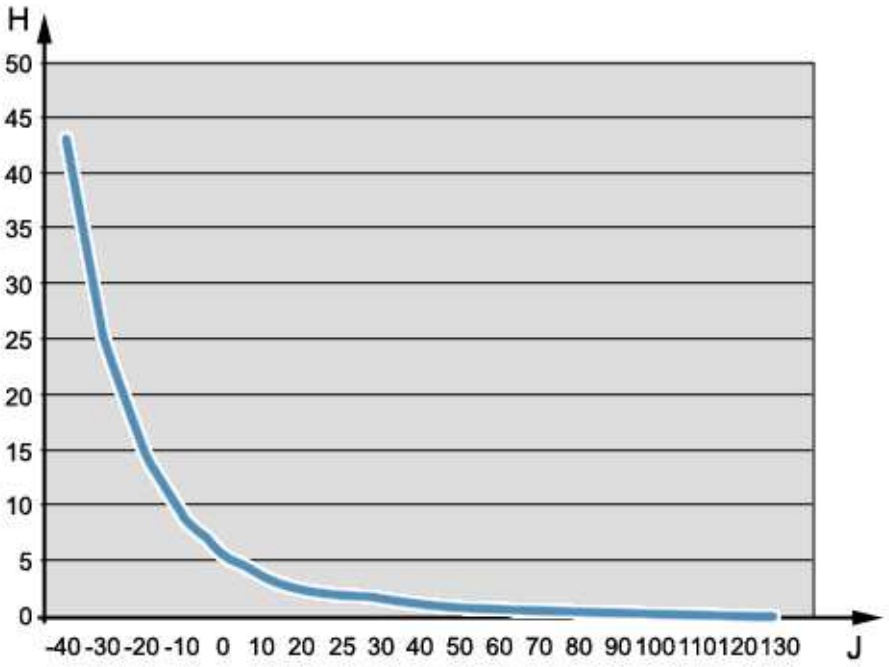

d4ea8fmd

"H" Nominal resistance (In Kohms).

"J" Air temperature (in °C).

Temperature in deg. C	Minimum resistance (In Kohms)	Nominal resistance (In Kohms)	Maximum resistance (In Kohms)
-40	37,34	43,32	50,14
-30	21,7	24,71	28,08
-20	13,08	14,65	16,37
-10	8,134	8,969	9,866
0	5,2	5,652	6,127
10	3,416	3,663	3,918
20	2,297	2,433	2,57
25	1,9	2	2,1
30	1,562	1,653	1,746
40	1,073	1,148	1,226
50	0,752	0,813	0,877
60	0,537	0,587	0,639
70	0,391	0,431	0,473
80	0,289	0,321	0,356
90	0,217	0,243	0,272
100	0,165	0,186	0,21



d2aa02hd

"a" 4 way grey connector	
Number of channels	Allocation of the tracks of the connector
1	Air flow signal
2	Earth
3	Supply voltage
4	Air temperature signal

5 - PROGRAMMING - INITIALISATION

Not applicable.

DESCRIPTION - FUNCTION : INLET AIR TEMPERATURE AND PRESSURE SENSOR

1 - DESCRIPTION

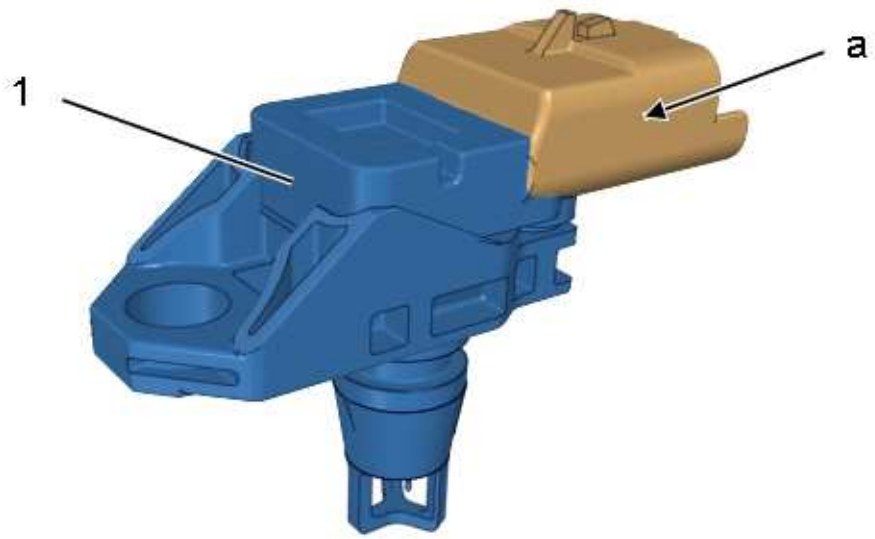

d4ea0ezd

(1) Inlet air temperature and pressure sensor .

"a" 4-way black connector .

The sensor combines the functions of temperature sensor and pressure sensor .

The inlet air pressure sensor is of the piezo-resistive type .

The inlet air temperature sensor is a negative temperature coefficient (NTC) sensor .

make : DENSO .

2 - ROLE

The sensor measures the pressure and the temperature of the flow of air, passing around the sensor inside the inlet manifold .

3 - FUNCTION

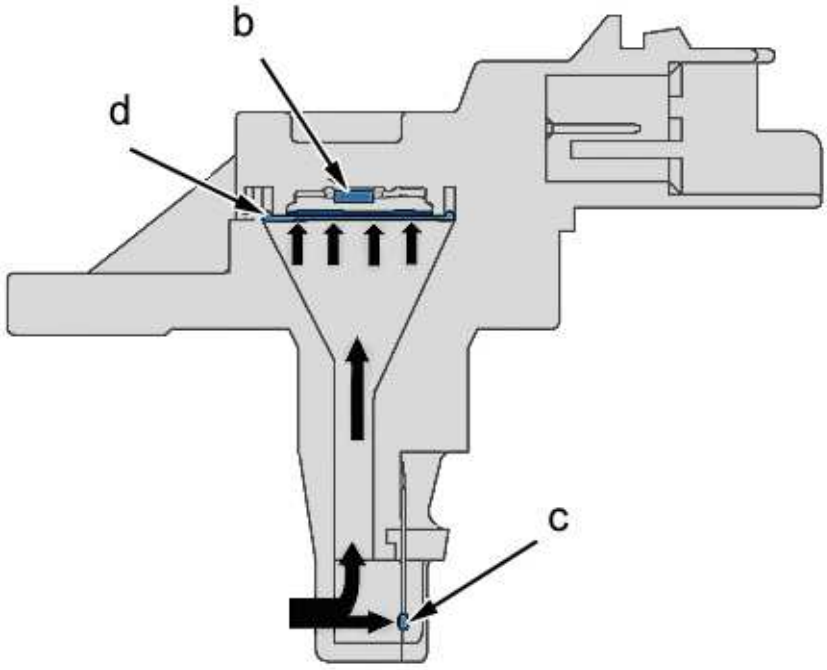

d4ea023d

"b" Resistive plate .

"c" Resistor for measuring the air temperature .

"d" Diaphragm .

The flow of inlet air is divided in two inside the sensor :

- A part of the air exerts a pressure on the diaphragm of the pressure sensor
- A part of the air varies the value of the CTN resistance (Negative Temperature Coefficient)

3 - 1 - pressure sensor

The force exerted by the pressure of the incoming air on the diaphragm of the inlet air pressure sensor is converted into an electric charge .

3 - 2 - Temperature sensor

The NTC (Negative Temperature Coefficient) resistance value "R" changes in relation to the change in the temperature "T" :

- When the temperature "T" increases, the resistance value "R" decreases
- When the temperature "T" decreases, the resistance value "R" increases

4 - ELECTRICAL FEATURES

Designation	Value	Unit
Supply voltage	5 ± 0,25	V
Pressure measured by the inlet air	Between 300	Mbar

temperature and pressure sensor	and 3000	
Impedance between channels 3 and 4 (Connector disconnected, negative terminal of the ohmmeter on channel 4)	15 or below	kohms
Impedance between channels 2 and 4 (Connector disconnected, negative terminal of the ohmmeter on channel 4)	15 or below	kohms
Supply power	15 maximum	mA

4 - 1 - pressure sensor

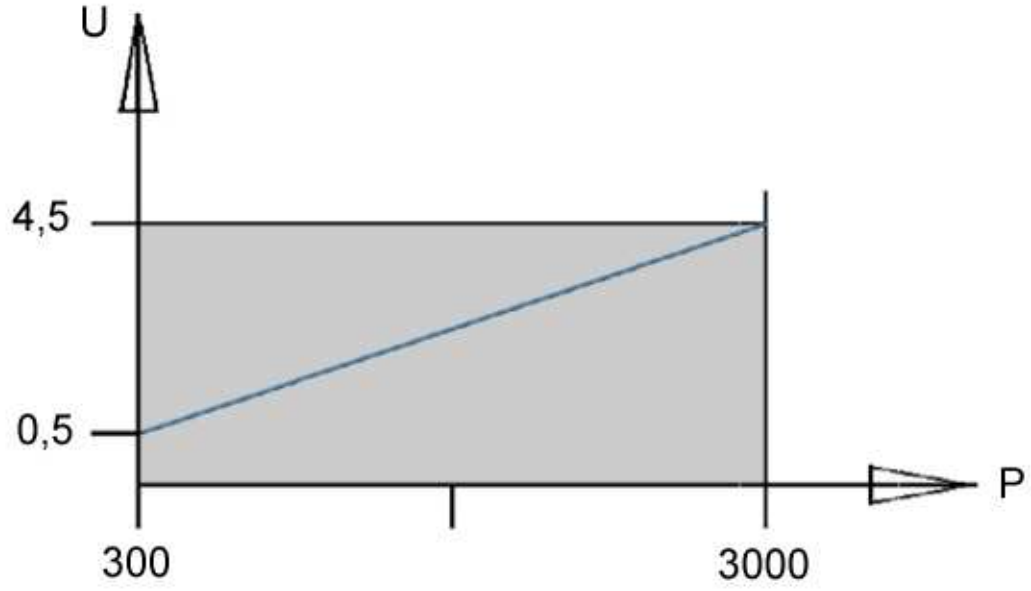

d4ea024d

"U" Output voltage of the inlet air temperature and pressure sensor (volts) .

"P" Absolute pressure measured by the inlet air temperature and pressure sensor (± 30 Mbar) .

The pressure sensor provides digital electrical power that is proportional to the pressure measured .

4 - 2 - Temperature sensor

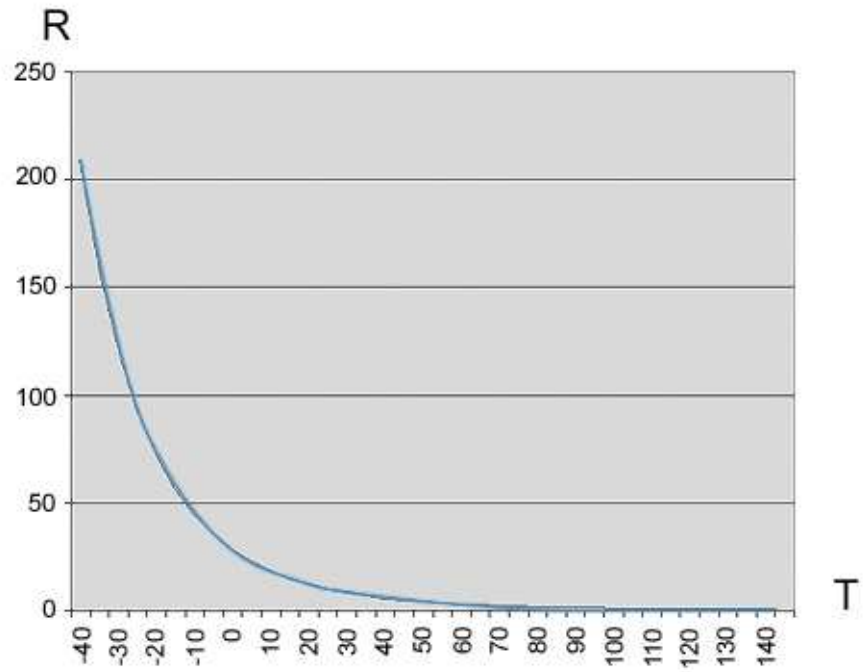

d4ea02bd

"R" Resistance R (kohms) .

"T" Intake air temperature (°C) .

Temperature (°C)	Resistance (kohms)	Tolerance(s) (°C)
-40	209,6	± 2,5
-35	158,1	± 2,5
-30	120,4	± 2,5
-25	92,5	± 2,5
-20	71,7	± 2,5
-15	56	± 2,5
-10	44,1	± 2,5
-5	35	± 2,5
0	27,9	± 1,5
5	22,5	± 1,5
10	18,2	± 1,5
15	14,8	± 1,5
20	12,1	± 1,5
25	10	± 1,5
30	8,29	± 1,5
35	6,9	± 1,5
40	5,8	±1,5
45	4,8	± 1,5
50	4,1	± 1,5
55	3,5	± 1,5
60	2,9	± 1,5
65	2,54	± 1,5
70	2,19	± 1,5

75	1,89	± 1,5
80	1,63	± 1,5
85	1,41	± 1,5
90	1,23	± 1,5
95	1,08	± 1,5
100	0,95	± 1,5
105	0,83	± 1,5
110	0,73	± 1,5
115	0,65	± 2,5
120	0,58	± 2,5
125	0,51	± 2,5
130	0,46	± 2,5
135	0,41	± 2,5
140	0,37	± 2,5
145	0,33	± 2,5

4 - 3 - Connections

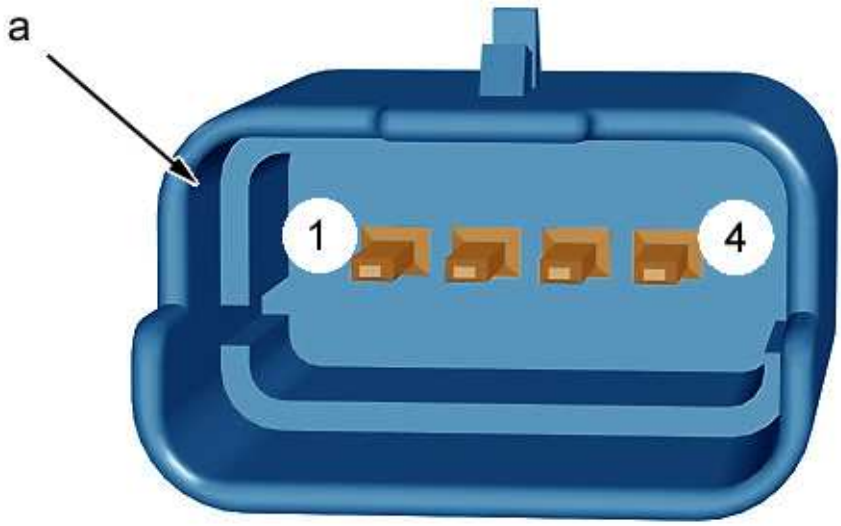

d2aa00fd

"a" 4-way black connector	
Channel number	Allocation of channels of connector
1	Temperature output signal
2	Supply voltage
3	Earth
4	Pressure output signal

5 - LEARNING / INITIALISATION

Not applicable .

DESCRIPTION - OPERATION : PARTICULATE FILTER UPSTREAM GAS TEMPERATURE SENSOR

1 - DESCRIPTION

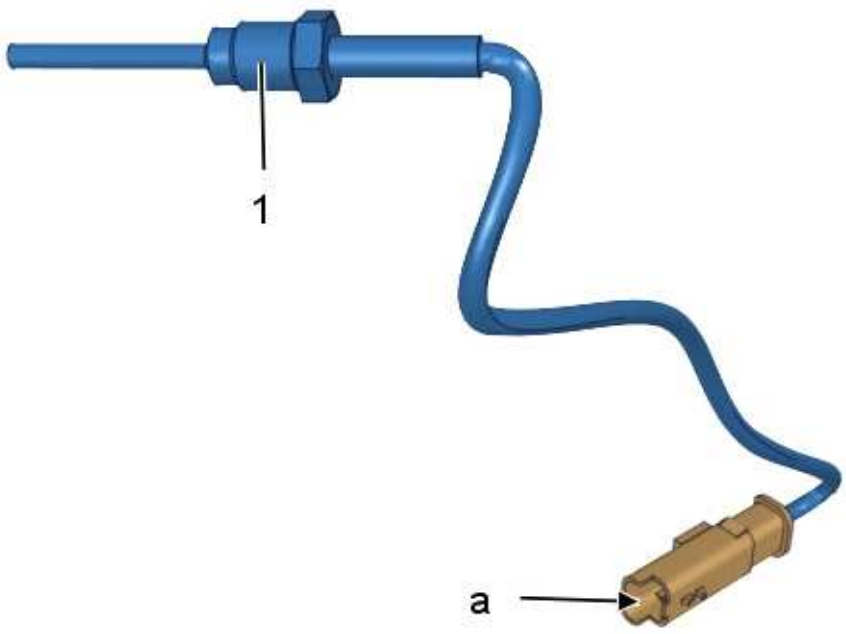

b1ka007d

(1) Particulate filter upstream gas temperature sensor .

"a" 2 way brown connector .

Supplier : DENSO CORPORATION .

Resistive sensor with negative temperature coefficient .

2 - ROLE

The gas temperature sensor upstream of the particle filter informs the engine ECU of the temperature of the exhaust gases .

3 - OPERATION

The NTC (Negative Temperature Coefficient) resistance value "R" changes in relation to the change in the temperature "T" :

- When the temperature "T" increases, the resistance value "R" decreases
- When the temperature "T" decreases, the resistance value "R" increases

4 - ELECTRICAL FEATURES

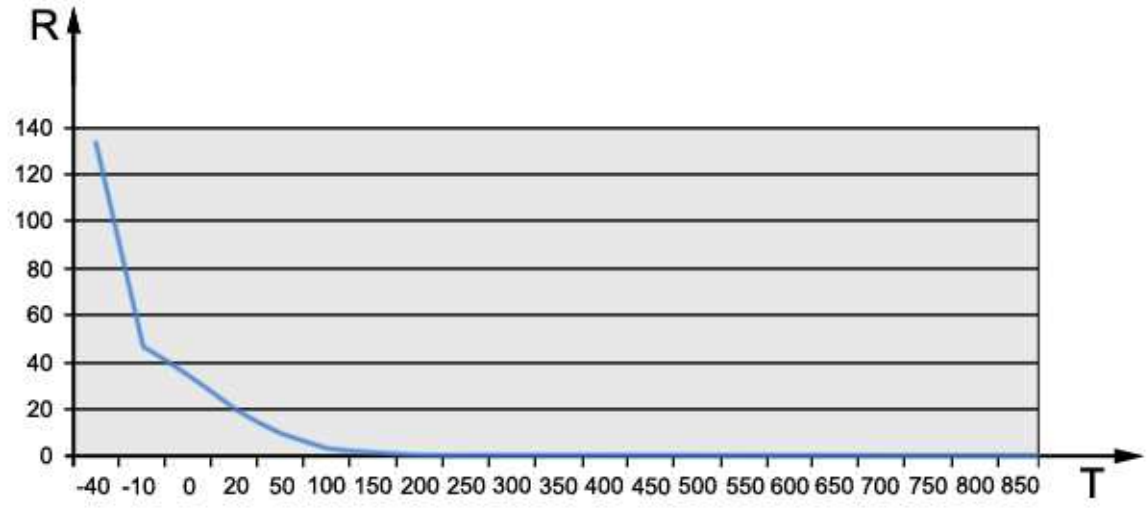

b1ka009d

"R" Resistance R (In Kohms) .

"T" Coolant temperature (°C) .

Minimum value (°C)	Temperature (°C)	Maximum value (°C)	Resistance R (In Kohms)
-50	-40	-30	133,8
-20	-10	0	46,76
-10	0	10	34,49
10	20	30	19,86
40	50	60	9,748
90	100	110	3,770
140	150	160	1,802
190	200	210	1,001
240	250	260	0,616
290	300	310	0,412
340	350	360	0,293
390	400	410	0,218
440	450	460	0,168
490	500	510	0,134
540	550	560	0,109
590	600	610	0,090
640	650	660	0,076
690	700	710	0,065
740	750	760	0,056
790	800	810	0,049
840	850	860	0,043

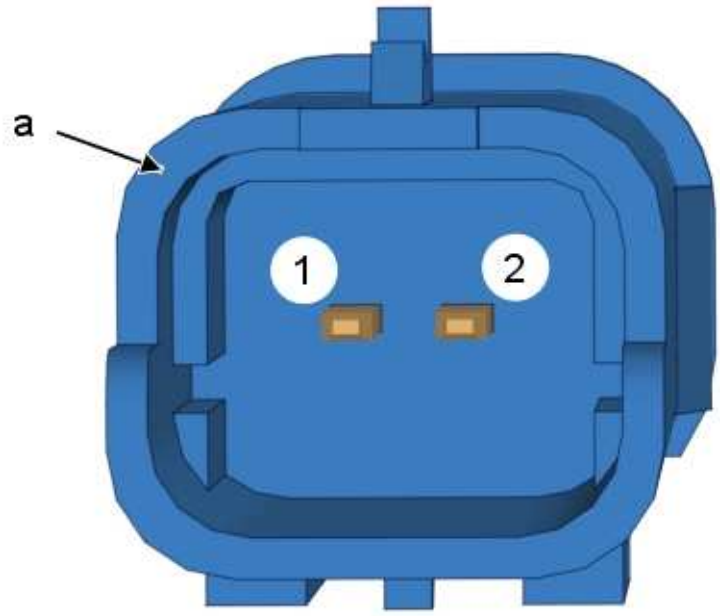

d2aa02xd

"a" 2 way brown connector	
Channel number	Allocation of the tracks of the connector
1	Information from the particulate filter upstream gas temperature sensor
2	Earth

5 - INITIALISATION / INITIALISATION

Not applicable .

DESCRIPTION - FUNCTION : PROPORTIONAL OXYGEN SENSOR

1 - DESCRIPTION



b1ka00md

(1) Proportional oxygen sensor .

"a" 6-way brown connector .

make : NGK .

2 - ROLE

The proportional oxygen sensor measures the oxygen content of the exhaust gases relative to the ambient air .

The proportional oxygen sensor determines the oxygen content of the exhaust gas and deduces the exact richness of the mixture .

3 - FUNCTION

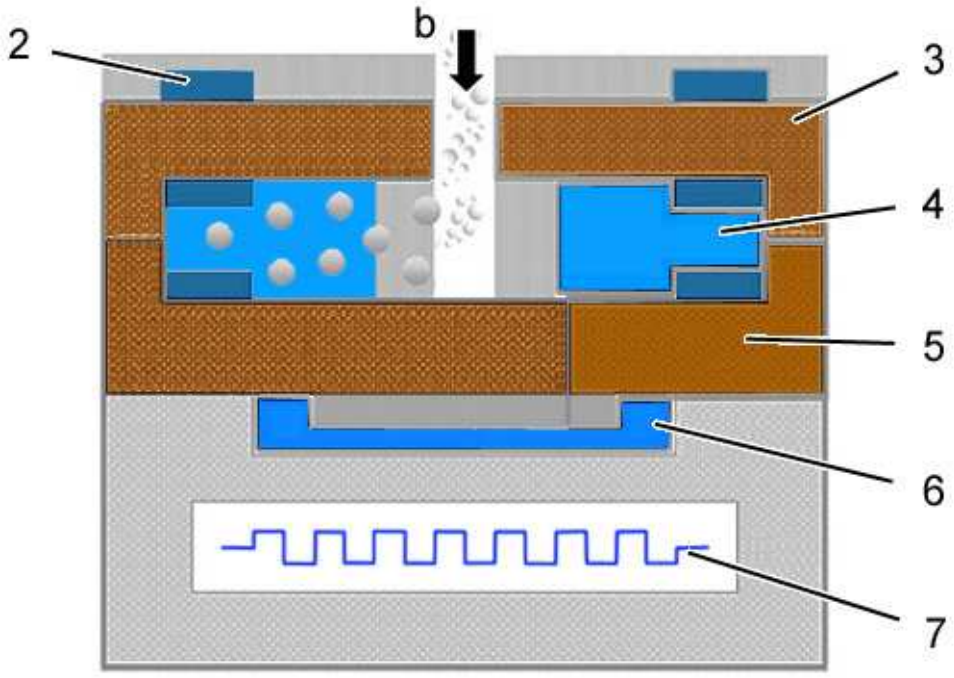

b1ka00nd

"b" Exhaust gas supply channel .

(2) Electrode .

(3) Pumping cell .

(4) Measuring chamber .

(5) Nernst cell .

(6) Reference cavity .

(7) Heating resistor .

The oxygen contained in the oxygen sensor is drawn into the exhaust gases by a pumping current and retained in the measuring chamber (4) .

The Nernst cell compares the oxygen in the measuring chamber (4) with the oxygen in the reference cavity (6) .

To have an oxygen rate of 1, the oxygen in the measuring chamber (4) must be the same as the oxygen in the reference cavity (6) .

The value of the pumping current is linked with the flow of oxygen originating from the exhaust gas, necessary in order to regenerate the oxygen in the measuring chamber (4) and have a lambda of 1 .

When lambda is higher than 1 in the measuring chamber (4), the pumping current is positive, the excess oxygen contained in the measuring chamber is taken off to be sent to the exhaust gas .

When lambda is lower than 1 in the measuring chamber (4), the pumping current is negative, the oxygen which is lacking is taken from the exhaust gas and sent to the measuring chamber .

To have an oxygen rate of 1, the Nernst cell must deliver a voltage of 0,45 V .

The electrical output signal that is proportional to the oxygen content is obtained by measuring the current necessary for the pumping cell to regulate the oxygen content in the measuring chamber .

4 - ELECTRICAL FEATURES



d2aa05bd

6-way brown connector	
Channel number	Allocation of channels of connector
1	Compensation resistor
2	Pumping current
3	heating (-)
4	Nernst voltage
5	heating (+)
6	Earth

5 - LEARNING / INITIALISATION

Not applicable .

DESCRIPTION - OPERATION : PARTICLE FILTER DIFFERENTIAL PRESSURE SENSOR

1 - DESCRIPTION

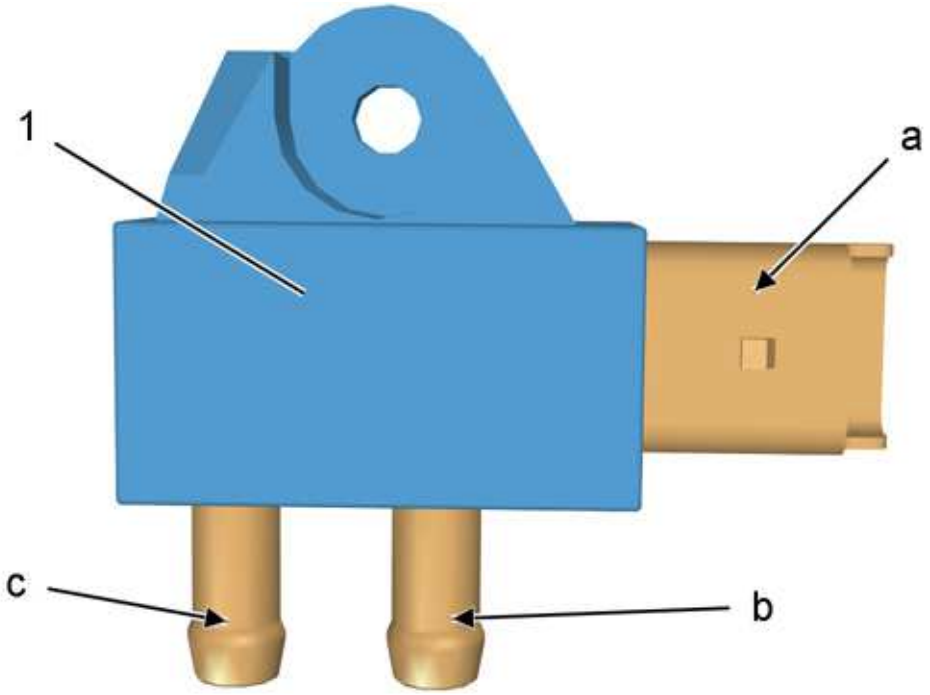

d4ea0a7d

(1) Particle filter differential pressure sensor .

"a" 3-way black connector .

"b" Pressure take-off downstream of the particle filter .

"c" Pressure take-off upstream of the particle filter .

Supplier : Denso / Sensata .

The sensor is of the piezo-resistive type .

2 - ROLE

The particle filter differential pressure sensor measures the difference in pressure of the exhaust gases between upstream and downstream of the particle filter .

3 - OPERATION

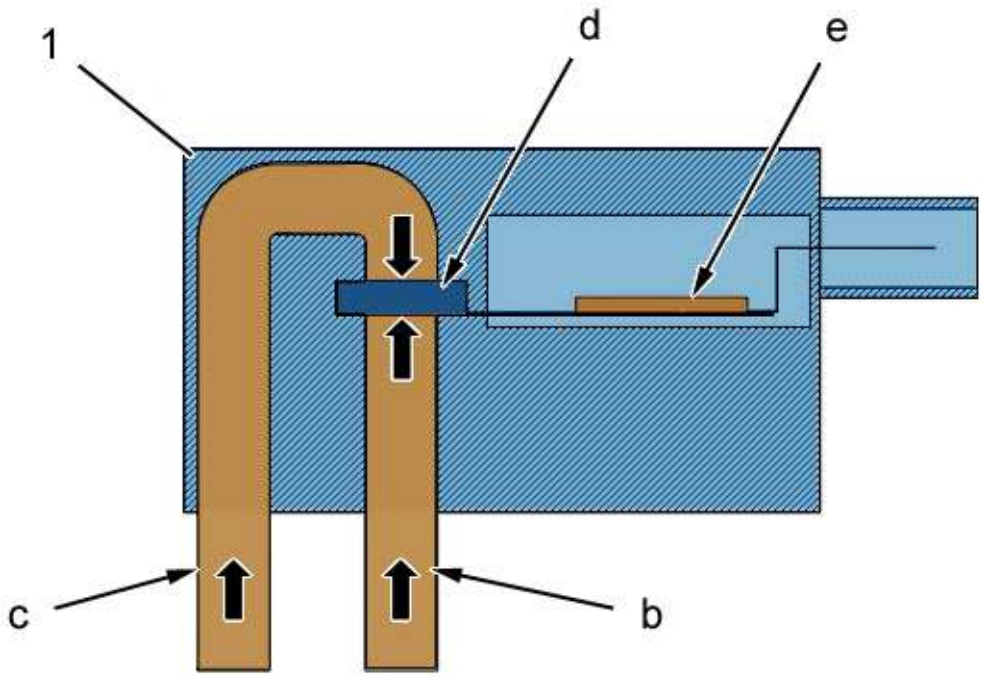

d4ea0a8d

(1) Particle filter differential pressure sensor .

"b" Pressure take-off downstream of the particle filter .

"c" Pressure take-off upstream of the particle filter .

"d" Piezoresistor sensor (or accelerometer) .

"e" Integral electronics .

The sensor is a passive sensor with integral electronics, supplied by the engine ECU (At +5V) .

The piezoresistor sensor receives the pressure upstream of the particle filter on its upper face and the pressure downstream of the particle filter on its lower face .

The difference between the pressure upstream and the pressure downstream of the particle filter causes the resistance of the piezoresistor sensor to vary .

Depending on the resistance of the piezoresistor sensor, the integral electronics generates a voltage that is proportional to the difference between the pressure measured upstream and the pressure measured downstream of the particle filter .

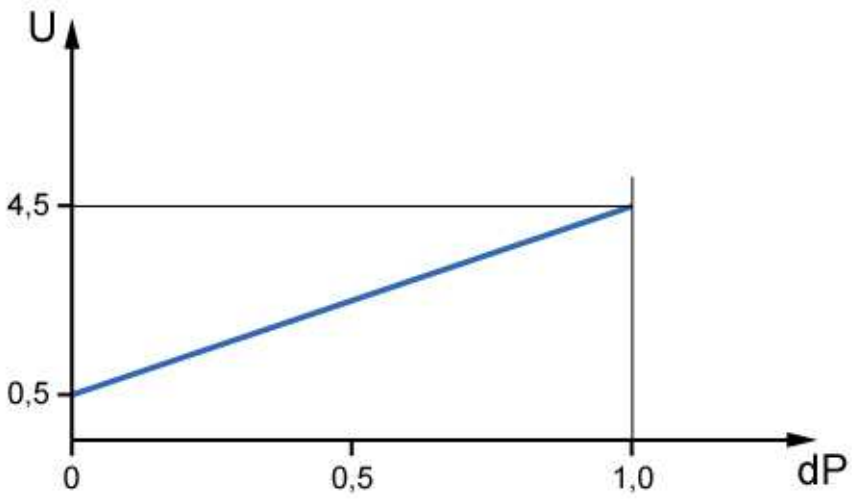

d4ea0aad

"U" Output voltage of the particle filter differential pressure sensor .

"dP" Difference in the pressure measured between upstream and downstream of the particle filter .

The output voltage of the particle filter differential pressure sensor is proportional to the difference in pressure between upstream and downstream of the particle filter .

4 - ELECTRICAL FEATURES

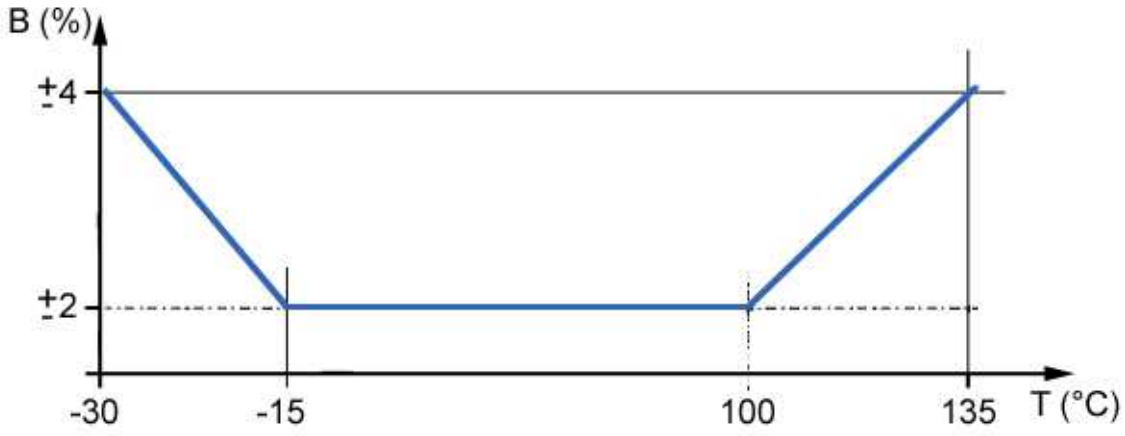

d4ea0aed

"B" Percentage error .

"T" Ambient temperature in which the sensor is operating .

The graph shows the percentage error as a function of the ambient temperature of the particle filter differential pressure sensor .

The least precise ranges of use (from ± 4 % to ± 2%) are between -30°C and - 15°C, and between + 100°C and +135°C .

The most precise range of use (± 2 %) is between -15°C and + 100°C .

Description	Value
Supply voltage	5 ± 0,25 V
Exceptional supply voltage	6 V
Maximum supply current	20 mA
Range of differential pressure measured	0 ≤ differential pressure measured ≤ 100 kPa
Maximum pressure admissible without irreversibly damaging the operation of the sensor	Maximum pressure upstream : 220 Kpa
	Maximum pressure downstream : 100 Kpa
Maximum pressure admissible without mechanically destroying the sensor	Pressure upstream : 310 Kpa
	Pressure downstream : 110 Kpa
Environmental temperature in use	- 30°C ≤ useful temperature ≤ + 135°C
Environmental temperature not in use	- 40°C ≤ storing temperature ≤ + 145°C
Maximum temperature of exhaust gas entering the sensor	125 °C
Output impedance	< to 10 Ohms



d4ea0agd

"a" 3-way black connector	
Channel No.	Allocation of the tracks of the connector
1	Output voltage
2	Earth
3	Supply voltage

5 - PROGRAMMING/INITIALISATION

Programming is necessary if the part is removed/refitted ; Refer to the documentation : Diagnostic equipment functions : Programming/initialisation .

DESCRIPTION - FUNCTION : AIR CON FLUID LINEAR PRESSURE SENSOR

1 - DESCRIPTION

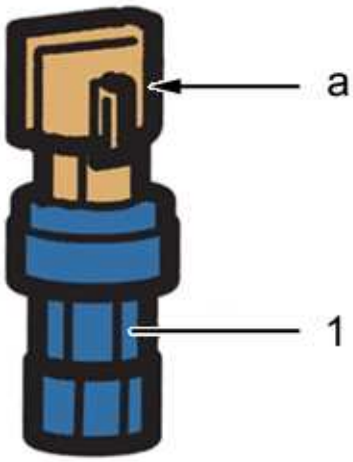

d4ea5rod

(1) Air con fluid linear pressure sensor.

"a" 3 way connector.

The sensor is of the capacitor type.

2 - ROLE

The aircon fluid linear pressure sensor measures the pressure in the cold loop of the air conditioning circuit.

3 - OPERATION

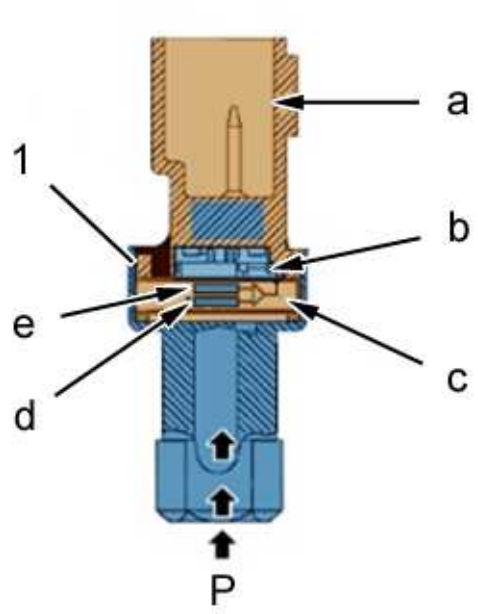

d4ea5rqd

(1) Air con fluid linear pressure sensor.

"a" 3 way connector.

"b" Electronic stage.

"c" Detection cell.

"d" Moving plate.

"e" Fixed plate.

"P" Pressure measued by the aircon fluid pressure sensor (bars).

The pressure of the fluid in the aircon circuit applied on the moving plate "d" causes a variation in capacity that is proportional to the pressure on the fixed plate "e".

The electronic stage converts and amplifies the variation of capacity in voltage proportional to the pressure of the aircon fluid.

4 - ELECTRICAL FEATURES

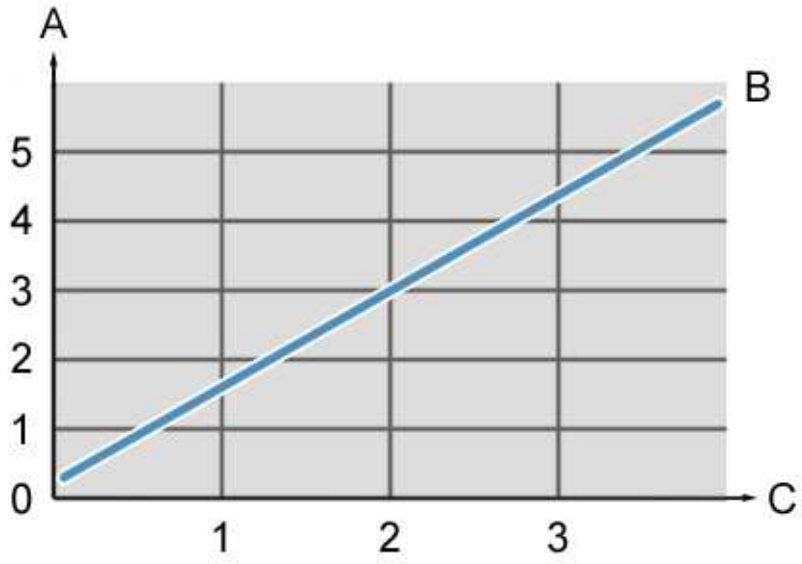

d4ea5rrd

"A" Tension (Volts).

"B" Graph of the output signal from the aircon fluid linear pressure sensor.

"C" Pressure (MPa).

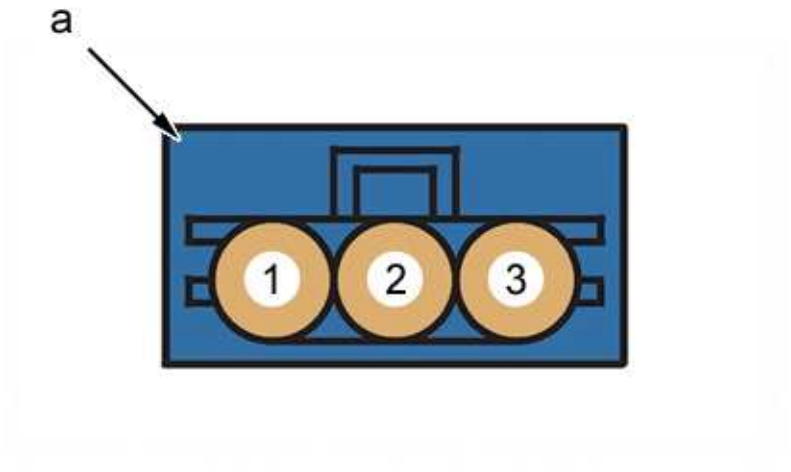

d4ea5rsd

"a" 3 way connector	
Channel n°	Allocation of the tracks of the connector
1	Earth
2	Pressure output signal
3	Supply voltage

5 - INITIALISATION

Not applicable.

DESCRIPTION - OPERATION : ENGINE OIL LEVEL SENSOR

1 - DESCRIPTION

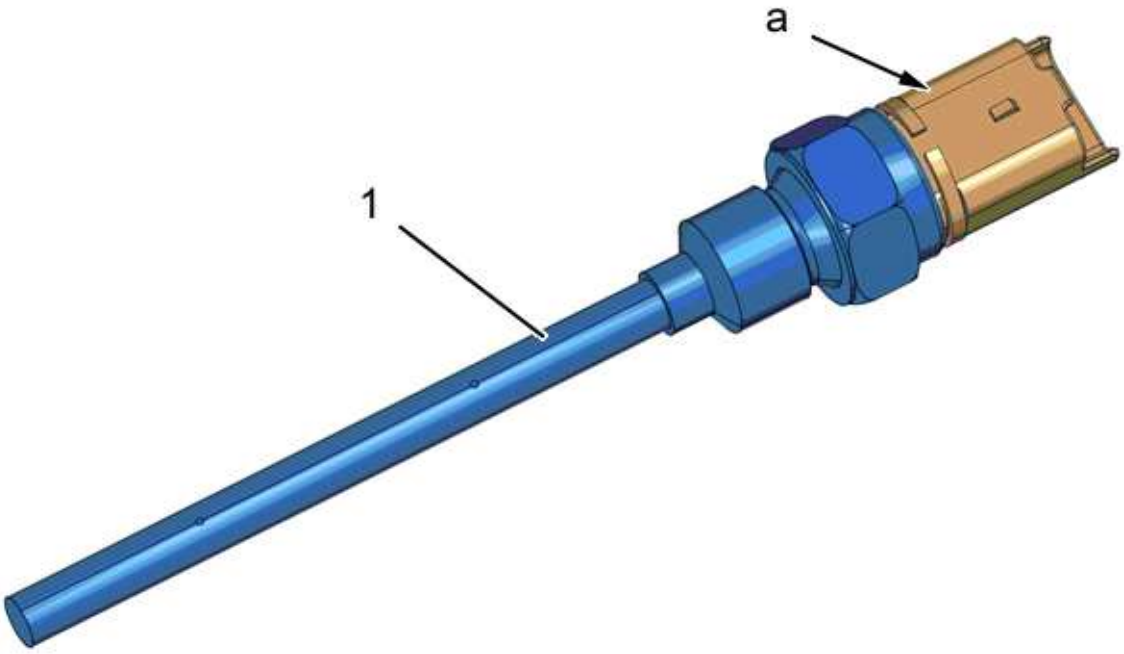

d4ea0e9d

(1) Engine oil level sensor .

"a" 3 way green connector .

Supplier : VALEO .

2 - ROLE

The engine oil level sensor is for measuring the level of engine oil present in the sump .

3 - OPERATION

The engine oil level sensor only operates when the vehicle ignition is switched on, stopping as soon as the engine is running .

The engine oil level sensor is supplied by a constant current provided by the engine ECU .

The engine oil level sensor provides an output voltage proportional to the level of engine oil that is present in the sump .

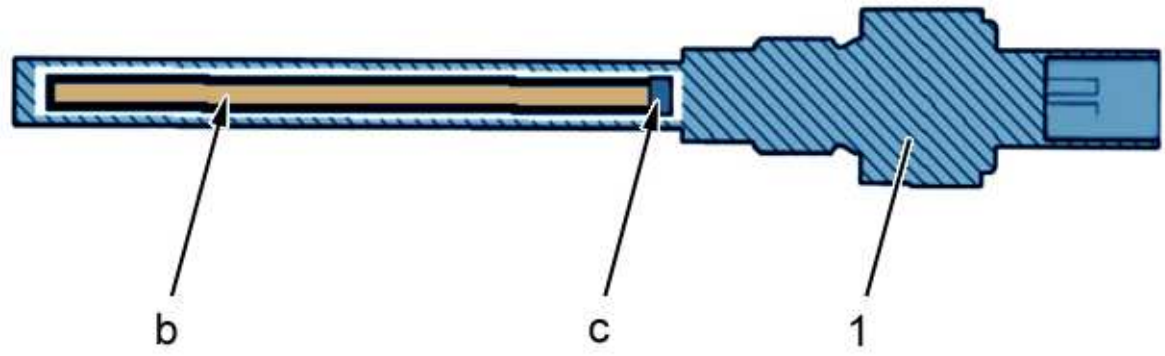

d4ea0ead

(1) Engine oil level sensor .

"b" Electrical wire in contact with the oil .

"c" Resistor .

The level of oil causes the resistance of the wire "b" to vary: the higher the oil level, the lower the resistance, so the output voltage reduces .

4 - ELECTRICAL SPECIFICATIONS

Description	Value	Unit
Supply current (For a duration of 1,75 ± 0,02s)	195 ± 2	mA
Resistance at -30 °C	8,5	Ohms
Resistance at +20 °C	10,6	Ohms
Resistance at +160 °C	16	Ohms

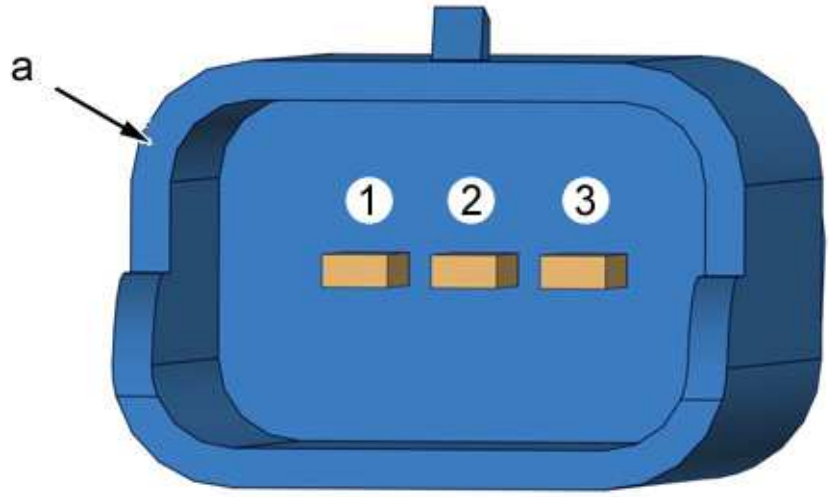

d4ea0ebd

"a" 3 way green connector	
Channel n°	Allocation of the tracks of the connector
1	Engine oil level signal
2	Not used
3	Earth

5 - INITIALISATION / INITIALISATION

Not applicable .

DESCRIPTION - OPERATION : ENGINE SPEED SENSOR

1 - DESCRIPTION

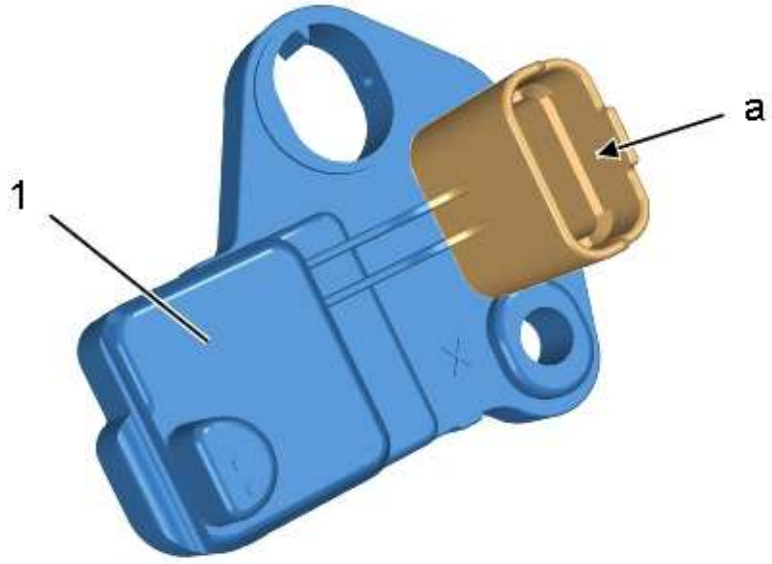

d2aa02cd

(1) Engine speed sensor .

"a" 3-way black connector .

Hall effect sensor .

Supplier : ÉLECTRICFIL .

2 - ROLE

Role of the engine speed sensor :

- To measure the speed of rotation of the engine
- Mark the top dead centre (TDC) on cylinders 1 and 4

3 - OPERATION

The target is composed of 58 (60-2) pairs of magnetic poles distributed on its periphery, two poles being absent in order to mark the top dead centre of pistons 1 and 4 .

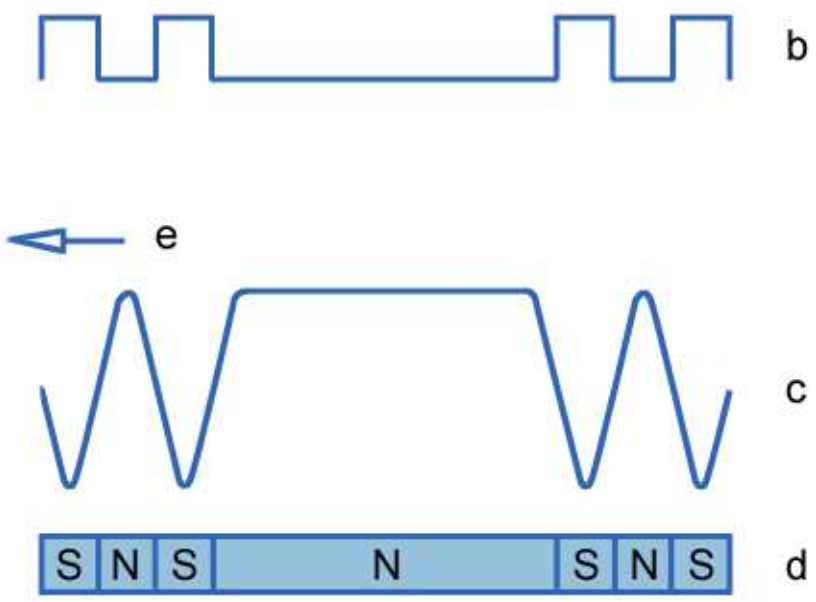

d4ea07td

"b" Detection of the signal .

"c" Magnetic signal .

"d" Magnetic track .

"e" Direction of rotation of the target .

A high status corresponds to a south pole .

The high/low transition coming after the zone of absence of two poles is representative of the top dead centre (TDC) position .

The passing of the north and south poles of the target in front of the engine speed sensor modifies the high status and low status engine speed sensor output voltage .

The frequency of the square signals produced by the passing of the poles of the target constitutes the engine's speed of rotation .

4 - ELECTRICAL FEATURES

Description	Minimum tolerance	Nominal value	Maximum tolerance
Supply voltage	4,75 V	5 V	5,25 V
Supply current	4,7 mA	7 mA	10 mA
Air gap	0,5 mm	-	1,5 mm

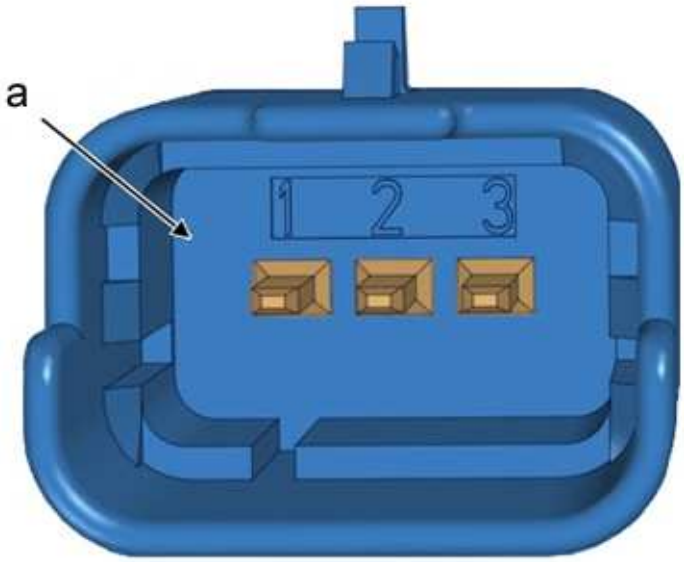

d2aa02dd

"a" 3-way black connector	
Channel No.	Allocation of the tracks of the connector
1	5V supply
2	Signal
3	Earth

5 - PROGRAMMING/INITIALISATION

Not applicable .

DESCRIPTION - OPERATION : CYLINDER REFERENCE SENSOR

1 - DESCRIPTION



d2aa025d

(1) Cylinder reference sensor .

"a" 3 way grey connector .

Supplier : CONTINENTAL .

Type : Hall effect sensor .

2 - ROLE

The cylinder reference sensor informs the engine ECU of the position of the camshaft in order to know which cylinder is in the compression phase .

3 - OPERATION

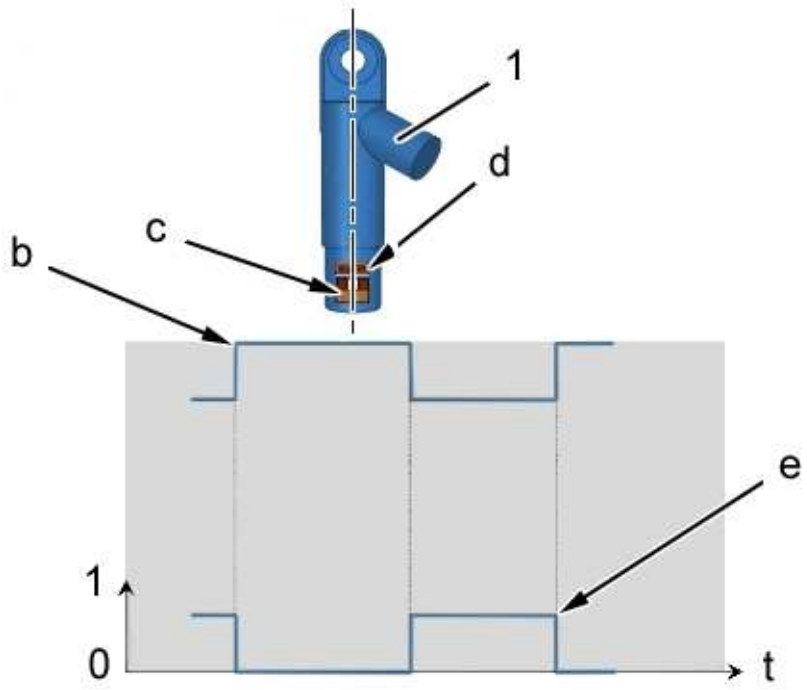

d4ea0fad

(1) Cylinder reference sensor .

"b" Ring gear .

"c" Permanent magnet .

"d" Detection cell .

"e" Output signal .

"t" Time .

During which a target is passing in front of the permanent magnet of the cylinder reference sensor : The output signal is in low status .

During which there is no target in front of the permanent magnet of the cylinder reference sensor: the output signal is in high status .

4 - ELECTRICAL SPECIFICATIONS

Description	Value	Unit
Supply voltage	5 ± 0,25	V
Maximum supply current	10	mA

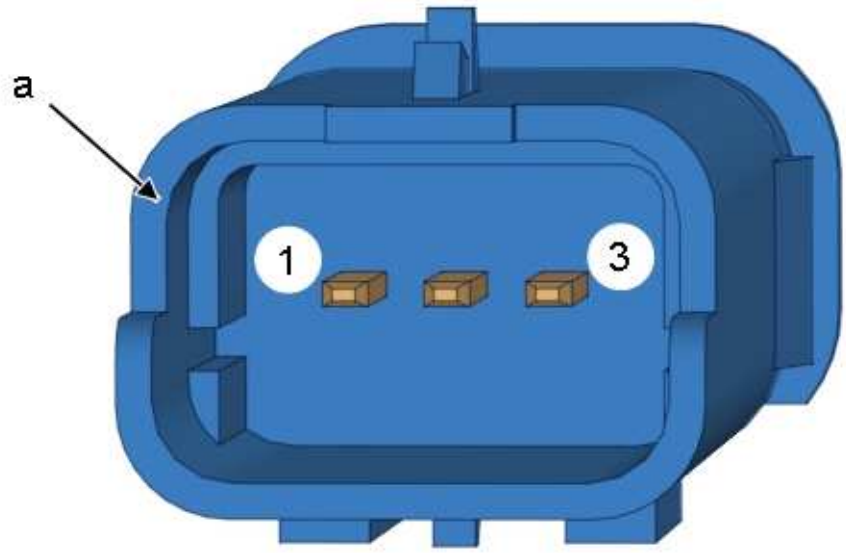

d2aa026d

"a" 3 way grey connector	
Channel No.	Allocation of the tracks of the connector
1	Supply voltage
2	Output signal
3	Earth

5 - PROGRAMMING/INITIALISATION

Not applicable .

DESCRIPTION - OPERATION : PRE-HEATER PLUG

1 - DESCRIPTION

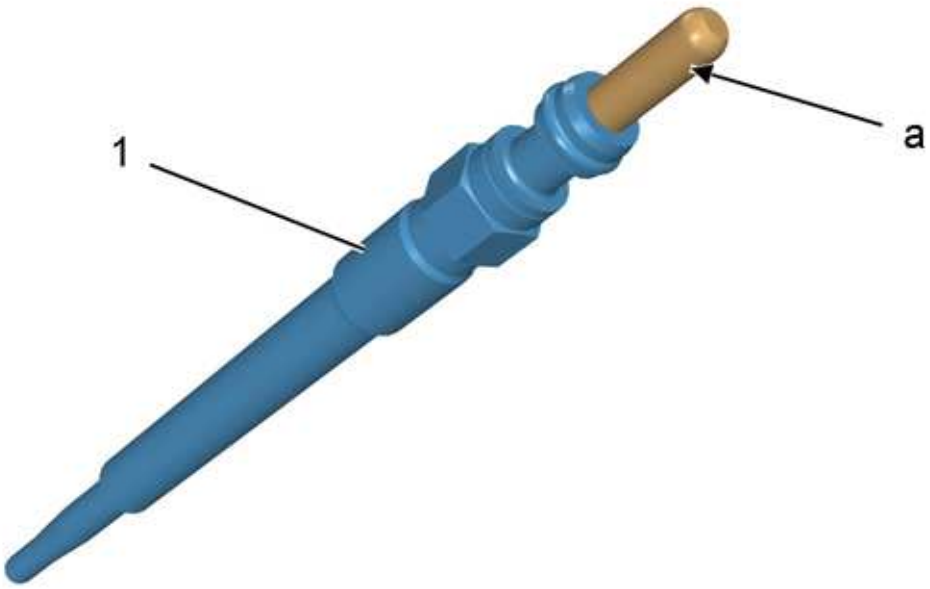

b1ha0avd

(1) Pre-heater plug .

"a" Supply switch .

Supplier : NGK .

2 - ROLE

The pre-heater plugs enable a rapid rise in temperature in the combustion chambers during the starting and cold-running phases .

The pre-heater plugs are also used for depollution, contributing to the reduction of nitrous oxides and soots .

3 - OPERATION

The preheater plug is an electric resistor element which heats up when it is supplied .

Regulation of the temperature is by regulation of the electrical supply (Open cycle ratio) .

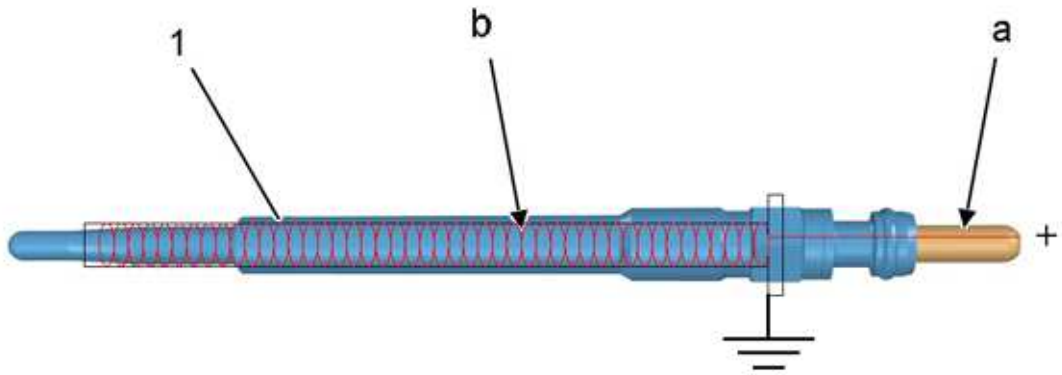

b1ha0axd

(1) Pre-heater plug .

"a" Supply switch .

"b" Heater element .

4 - ELECTRICAL SPECIFICATIONS

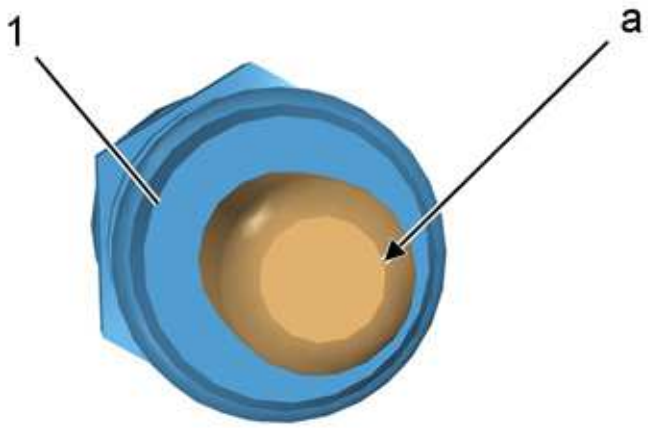

b1ha0azd

(1) Pre-heater plug .

"a" Supply switch .

NOTE : The earth is taken directly from the body of the preheater plug

Description	Minimum value	Nominal value	Maximum value
Supply voltage in preheating (Direct voltage)	-	11 Volts	-
Supply voltage in postheating (Open cycle ratio)	-	5 Volts	-
Supply current in preheating	26 amps	-	36 amps
Supply current in postheating	6 amps	-	15 amps

5 - PROGRAMMING/INITIALISATION

Not applicable .

DESCRIPTION - OPERATION : ELECTRIC DIESEL FUEL HEATER

1 - DESCRIPTION

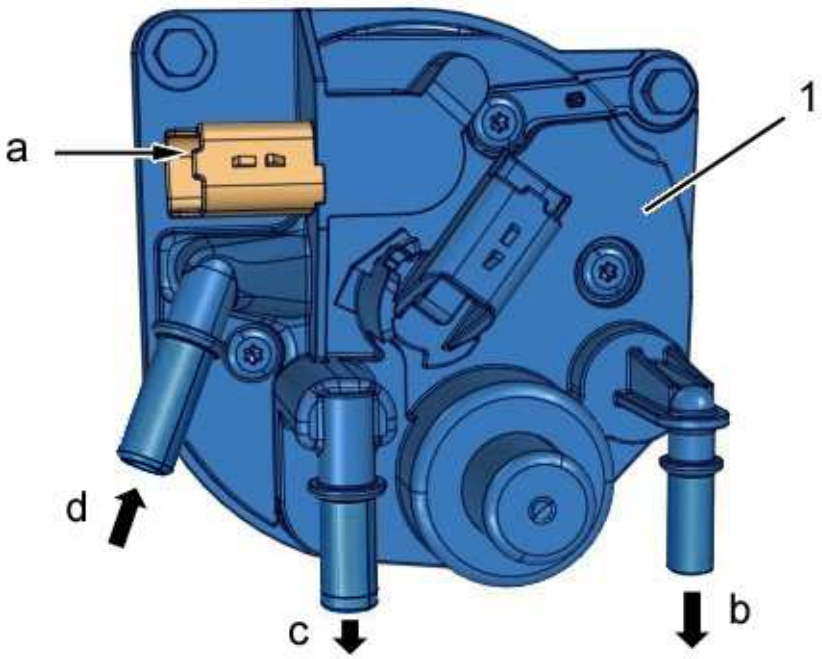

b1ga0ccd

(1) Electric diesel fuel heater .

"a" 2 way green connector .

"b" Fuel filter outlet / Diesel fuel return to tank .

"c" Fuel filter outlet / High pressure fuel pump .

"d" Fuel inlet into the fuel filter / Fuel tank .

Supplier : FILTRAUTO .

The electric diesel fuel heater is located directly above the diesel fuel filter .

2 - ROLE

The electric heater heats up the diesel fuel upstream of the fuel high pressure pump .

3 - OPERATION

The electrical resistor in the electric diesel fuel heater is operated by the engine ECU in the following conditions :

- Ignition on
- Engine running

- Air temperature below -2 ± 2°C
- The engine ECU no longer operates the electrical resistor in the electric diesel fuel heater when the air temperature reaches 3 ± 2°C

NOTE : A retention of the supply of the electric diesel fuel heater may be commanded for a few seconds after the ignition is switched off, depending on the air temperature

4 - ELECTRICAL FEATURES

Description	Minimum value	Nominal value	Maximum value
Supply voltage	8 Volts	-	16 Volts
Supply current	-	-	16 amps
Heating power	-	150 Watts	-

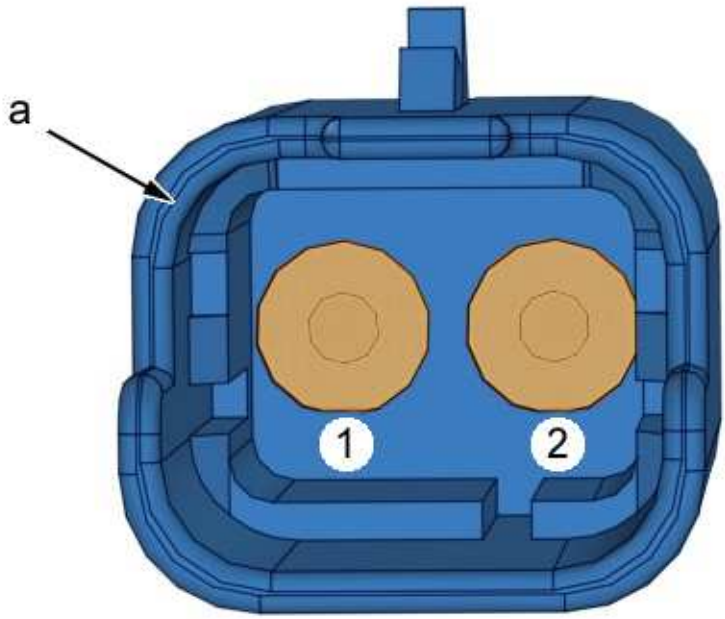

d2aa02vd

"a" 2 way green connector	
Channel No.	Allocation of the tracks of the connector
1	12 volts supply
2	Earth

5 - INITIALISATION / INITIALISATION

Not applicable .

DESCRIPTION - FUNCTION : FUEL FLOW REGULATION VALVE

1 - DESCRIPTION

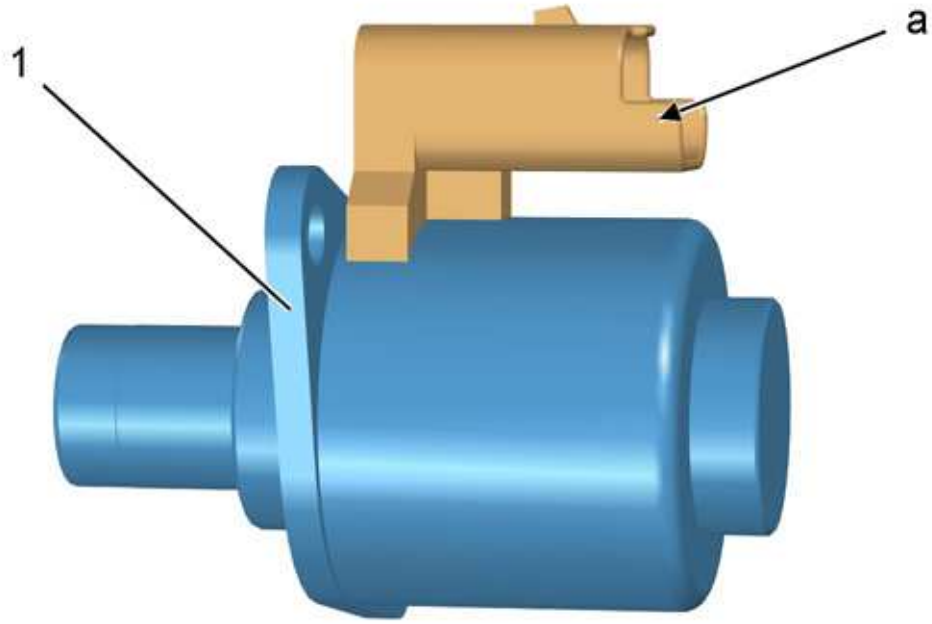

d4ea0a3d

(1) Fuel flow regulation valve .

"a" 2-way grey connector .

2 - ROLE

The fuel flow regulation valve regulates the quantity of fuel sent to the pumping components of the fuel high pressure pump in order to check the pressure in the high pressure common injection rail .

Role of the fuel flow regulation valve by adaptation of the quantity of fuel to the requirements of the engine :

- Maintain the fuel injection pressure at the level necessary
- Reduce the fuel return flow to reduce the fuel temperature in the return circuit to the fuel tank

3 - FUNCTION

When the fuel flow regulation valve is supplied :

- The flow regulation valve coil drives the slide valve (magnetic force)
- The connection between the 2 pipes is open
- The inlet to the "high pressure" stage of the high pressure fuel pump is open

When the fuel flow regulation valve is not supplied :

- The slide valve is positioned flush at the bottom of its location by means of the spring
- The connection between the 2 pipes is closed

4 - ELECTRICAL FEATURES

Designation	Value	Unit
Supply current	2	Amps

The fuel flow regulation valve is supplied by an open cycle ratio (OCR) .

Variable voltage control (OCR) :

- Maximum voltage (RCO = 100%) = Maximum fuel flow
- Minimum voltage (RCO = 0%) = Minimum fuel flow

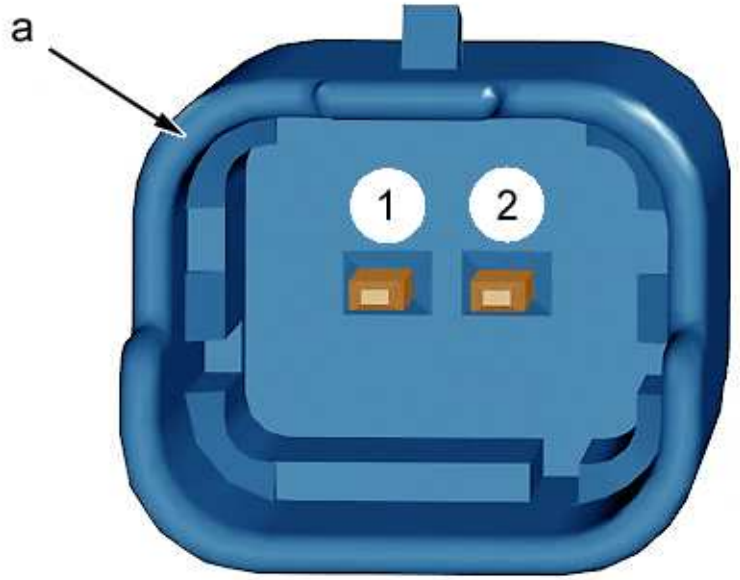

d2aa036d

"a" 2-way grey connector	
Channel No.	Allocation of channels of connector
1	Supply 12V
2	control

5 - LEARNING / INITIALISATION

Programming is necessary if the part is removed/refitted : Refer to the diagnostic tools documentation .

DESCRIPTION - FUNCTION : HIGH PRESSURE FUEL PUMP

1 - DESCRIPTION

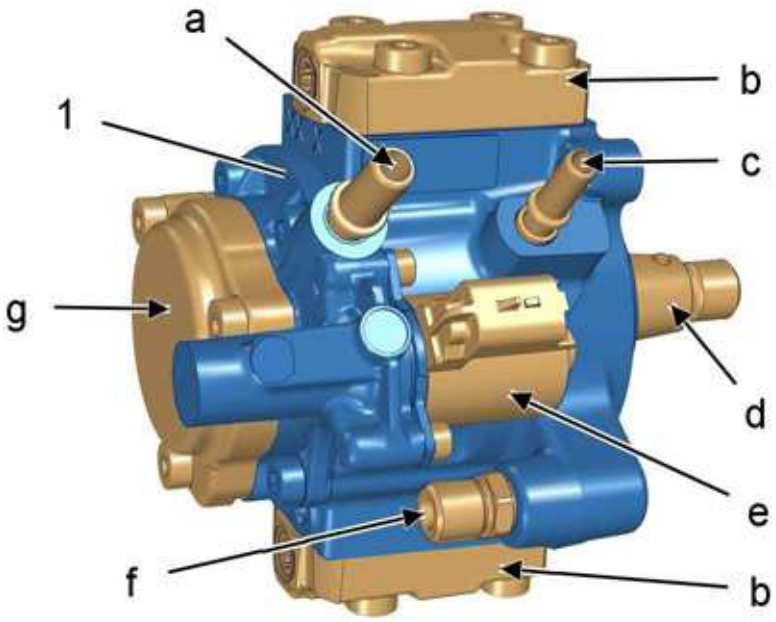

b1ha0e6d

(1) high pressure fuel pump.

"a" Fuel low pressure pump supply.

"b" Hydraulic head.

"c" High pressure fuel pump low pressure return.

"d" Cone and key type coupling.

"e" Fuel flow regulation valve .

"f" High pressure fuel outlet.

"g" Transfer pump (pre-supply).

make : CONTINENTAL.

2 - ROLE

Role of the high pressure fuel pump :

- To pump the fuel from the tank (integral transfer pump)
- To supply high pressure fuel
- To supply the diesel injectors through the high pressure common injection rail

3 - FUNCTION

3 - 1 - Transfer pump (pre-supply)

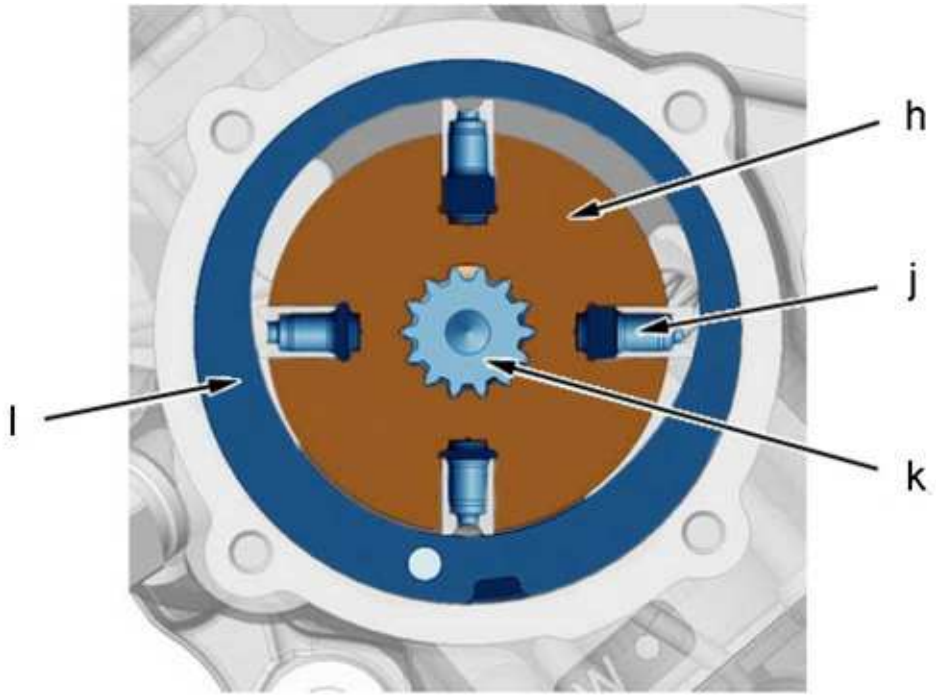

b1ha0e7d

"h" rotor.

"j" Fins.

"k" High pressure pump shaft.

"l" Stator.

Role of the transfer pump :

- To pump fuel into the fuel tank
- To supply the fuel high pressure pump (Compresses the fuel upstream of the fuel flow regulator)
- Lubrication and cooling of the fuel high pressure pump

The transfer pump (volumetric with 4 fins) is incorporated in the casing of the fuel high pressure pump.

A regulation valve maintains the transfer pressure at a constant value (6 bars) throughout the engine operating range by returning a proportion of the fuel to the transfer pump inlet.

3 - 2 - Creating the high pressure

The high pressure fuel pump consists of two radial pistons.

The roller pushed by the eccentric pump shaft moves transversely: The high pressure is generated in the fixed part of the fuel high pressure pump.

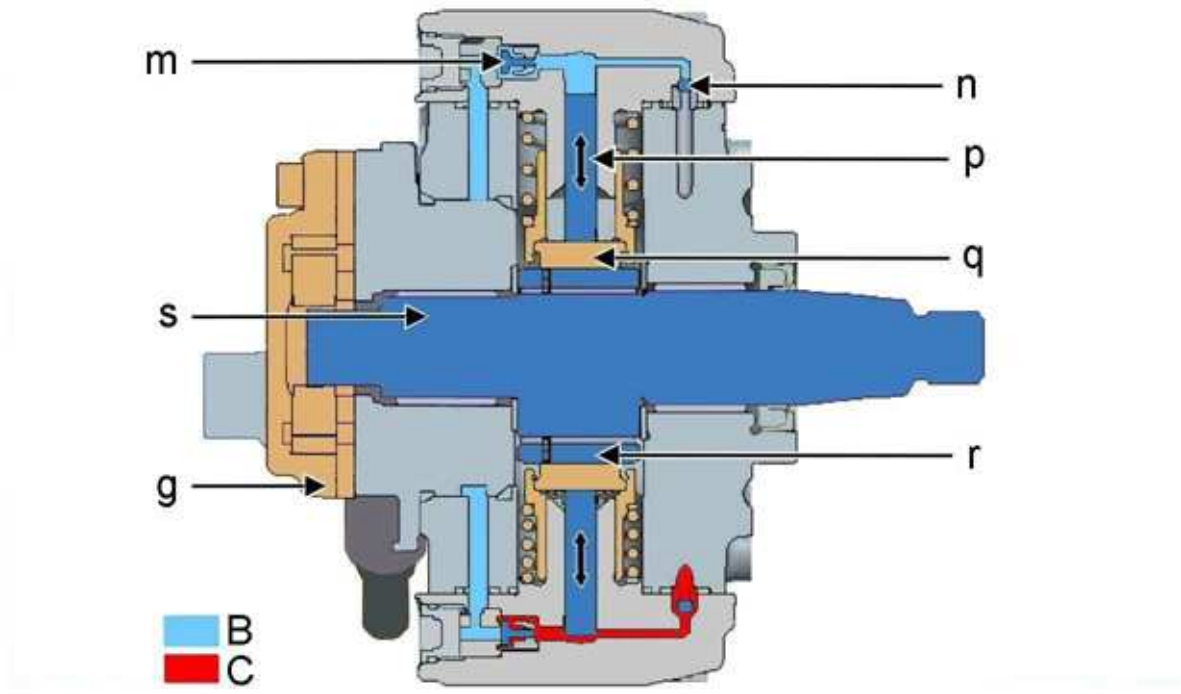

d4ea0kvd

"B" Low pressure .

"C" High pressure .

"g" Transfer pump (pre-supply).

"m" Inlet valve for the compression chamber of the fuel high pressure pump.

"n" Outlet valve for the compression chamber of the fuel high pressure pump.

"p" Plunger piston.

"q" Thrust pad .

"r" Roller.

"s" Eccentric pump shaft.

Fuel high pressure creation cycle :

- The eccentric pump shaft "s" positions the roller "r" in the low position
- The plunger piston "p" descends
- The fuel arriving from the transfer pump "g" via the fuel flow regulator is drawn in through the inlet valve "m"
- The fuel penetrates into the body of the pumping element
- When the eccentric pump shaft "s" rotates, the roller "r" rises again and pushes the plunger piston "p"
- The pressure in the body of the pumping component increases and becomes higher than the transfer pressure : The high pressure pump compression chamber inlet valve "m" closes

- The pressure in the body of the pumping component continues to increase and becomes higher than the pressure from the fuel high pressure common injection rail : The high pressure pump compression chamber outlet valve "n" opens
- The fuel is delivered to the high pressure pump compression chamber outlet valve "n"

4 - ELECTRICAL FEATURES

Not applicable.

5 - LEARNING/INITIALISATION

Programming is necessary if the part is removed/refitted ; Refer to the documentation : Diagnostic equipment functions : Programming/initialisation.

DESCRIPTION - FUNCTION : DIESEL INJECTORS

1 - DESCRIPTION

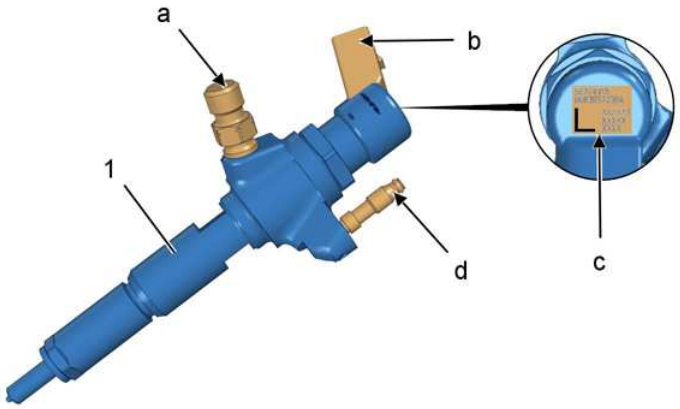

b1ha0ewd

(1) Diesel injector .

"a" Fuel supply .

"b" 2 way connector .

"c" Diesel injector specification label .

"d" Fuel return .

make : CONTINENTAL .

The diesel injectors consist of 2 parts :

- An electrical control part
- A fuel spraying part

The diesel injectors have 7 holes which encourage air/fuel mixing .

The diesel injectors are connected together by the fuel return circuit .

An alphanumeric code indicated on the diesel injector specification label defines its classification .

This alphanumeric code indicates the variation in manufacture of the diesel injectors in relation to a standard diesel injector .

Each diesel injector is commanded by the engine ECU in response to this differentiation .

2 - ROLE

The diesel injectors inject the amount of fuel required for the engine to operate .

3 - FUNCTION

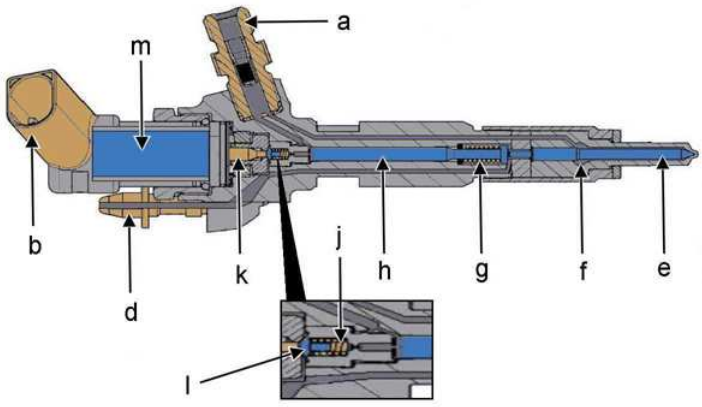

b1ha0exd

"a" High pressure fuel inlet connector .

"b" 2 way connector .

"d" Return to fuel tank .

"e" Diesel injector needle .

"f" Pressure chamber .

"g" Diesel injector needle spring .

"h" Diesel injector needle control piston .

"j" spring : Closure cap .

"k" Opening control piston .

"l" Closure cap .

"m" Actuator: piezo .

3 - 1 - Lifting principle of a diesel injector

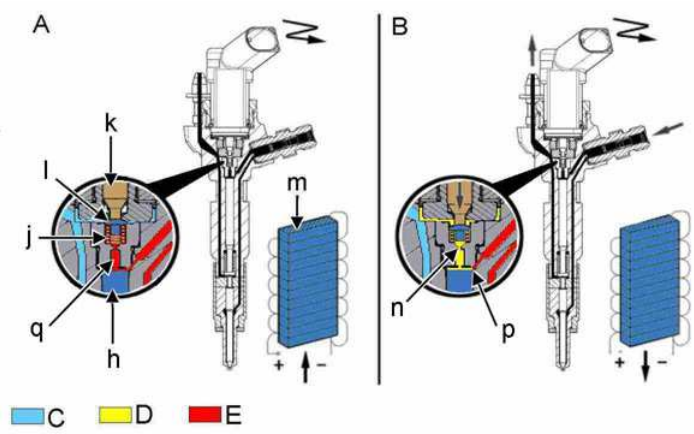

b1ha0eyd

"A" Diesel injector closed .

"B" Opening of a diesel injector .

"C" Fuel return (Low pressure) .

"D" Drop in fuel pressure .

"E" Fuel supply (High pressure) .

"j" spring : Closure cap .

"l" Closure cap .

"k" Opening control piston .

"m" Piezoelectric control element .

"h" Diesel injector needle control piston .

"n" Low pressure jet .

"p" High pressure jet .

"q" Control chamber .

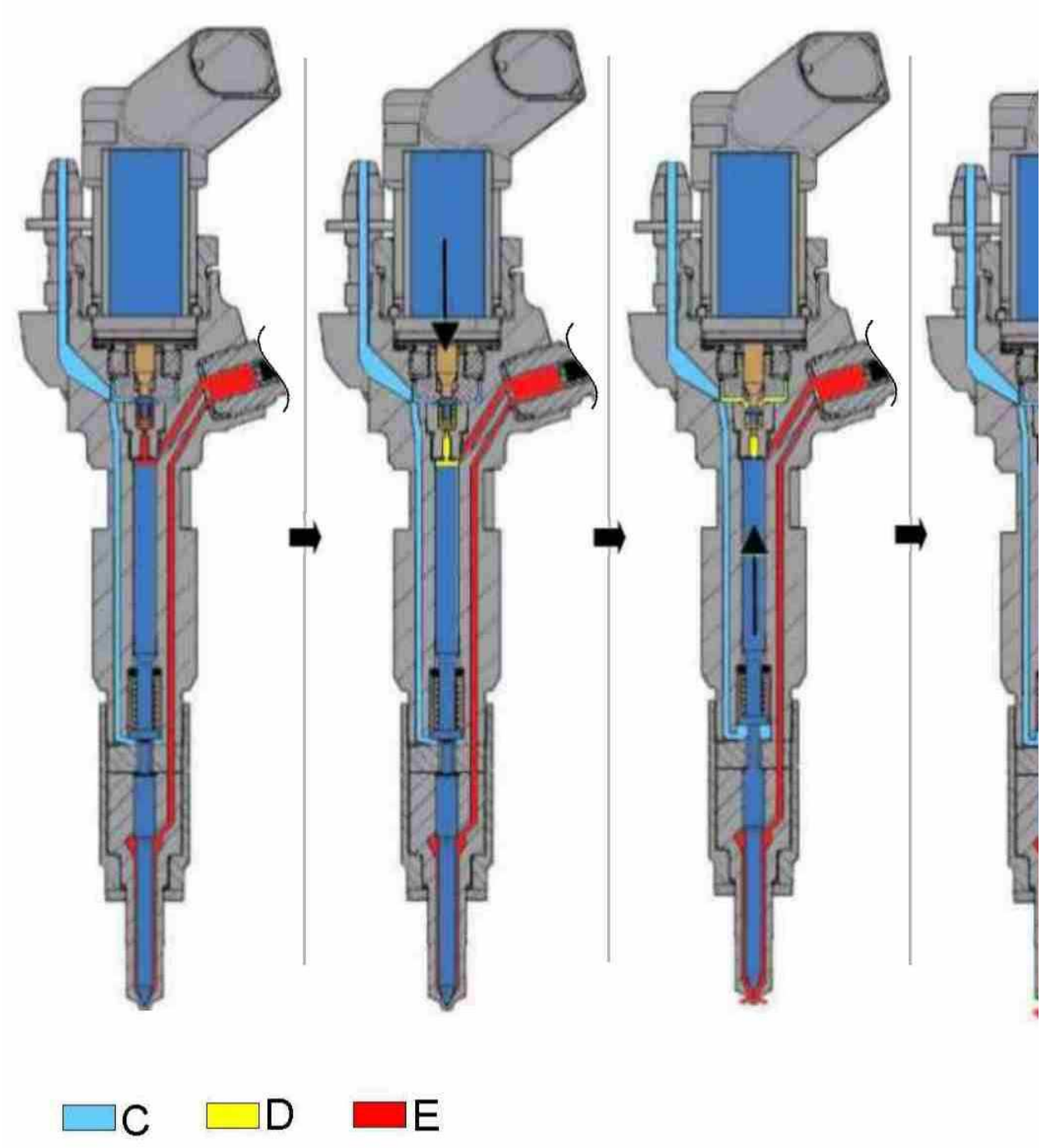

b1ha0ezp

"C" Fuel return (Low pressure) .

"D" Drop in fuel pressure .

"E" Fuel supply (High pressure) .

3 - 2 - Diesel injector closed

The force exerted by the high pressure is identical in the control chamber "q" and the pressure chamber "f" .

The control piston is locked (held against the diesel injector needle) .

The rise in pressure in the fuel high pressure common injection rail encourages the diesel injector to close .

3 - 3 - Opening principle of a diesel injector

The injection ECU supplies the piezoelectric control element .

The current applied distorts the piezoelectric control element, which extends .

The piezoelectric control element presses on the opening control piston "k" .

Phase of operation when the opening control piston "k" moves :

- A fuel leak is created through the jet "n"
- The entry of fuel via the jet "p" does not compensate for the leak via the jet "n" - (Diameter of the jet "p" different from the diameter of the jet "n")
- The balance between the pressures in chambers "q" and "f" is broken
- The pressure present in pressure chamber "f" lifts the diesel injector needle
- The control piston lifts up
- The fuel is sent to the top of the piston

The injection ECU interrupts the supply to the piezoelectric control element : The charging current stops ; The fuel capacitor remains charged .

Piezoelectric control element remains extended .

NOTE : Fuel injection lasts for as long as the piezoelectric control element is not discharged

3 - 4 - Closing principle of a diesel injector

Operating phase when the injection ECU supplies the piezoelectric control element of the diesel injector (With a discharge current) :

- The piezoelectric element retracts
- The spring "j" pushes the closure cap "l" down onto its seat
- The jet "n" is closed
- The fuel leak to the return circuit stops
- The rise in the pressure in pressure chamber "q" causes the diesel injector to close
- The balance of the pressures between chambers "q" and "f" is restored
- The diesel injector is ready for a new cycle

4 - ELECTRICAL FEATURES

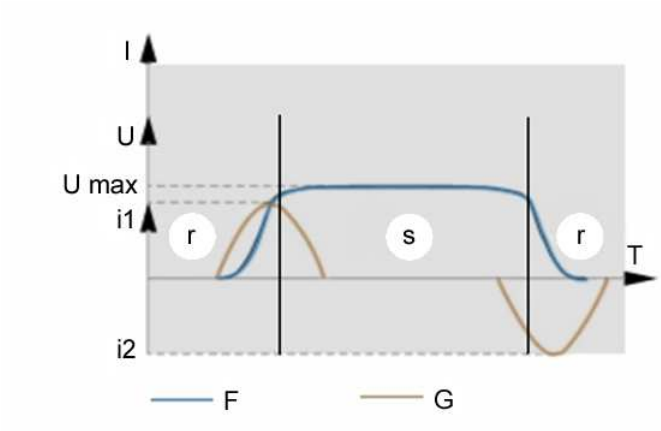

d4ea0nud

"F" Duration of opening of the injector .

"G" Duration of charging or discharging .

Diesel injector control current :

- T : Duration
- I : amps
- U : Volts
- "i1" : Charge current
- "i2" : Discharge current
- "r" : Diesel injector closed
- "s" : Diesel injector open

The piezoelectric control element is controlled in 2 phases :

- Charging phase of the piezoelectric control element (extension = opening)
- Discharging phase of the piezoelectric control element (retraction = closing)

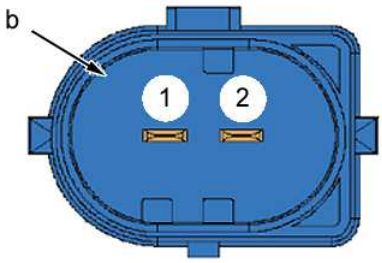

d2aa05gd

"b" 2 way connector	
Number of channels	Allocation of channels of connector
1	+ signal
2	- signal

5 - PROGRAMMING/INITIALISATION

Refer to the document : " Diagnostic tool : Injection system CONTINENTAL SID807 - DV6C engine " .

DESCRIPTION - FUNCTION : DIESEL ADDITIVE PUMP

1 - DESCRIPTION

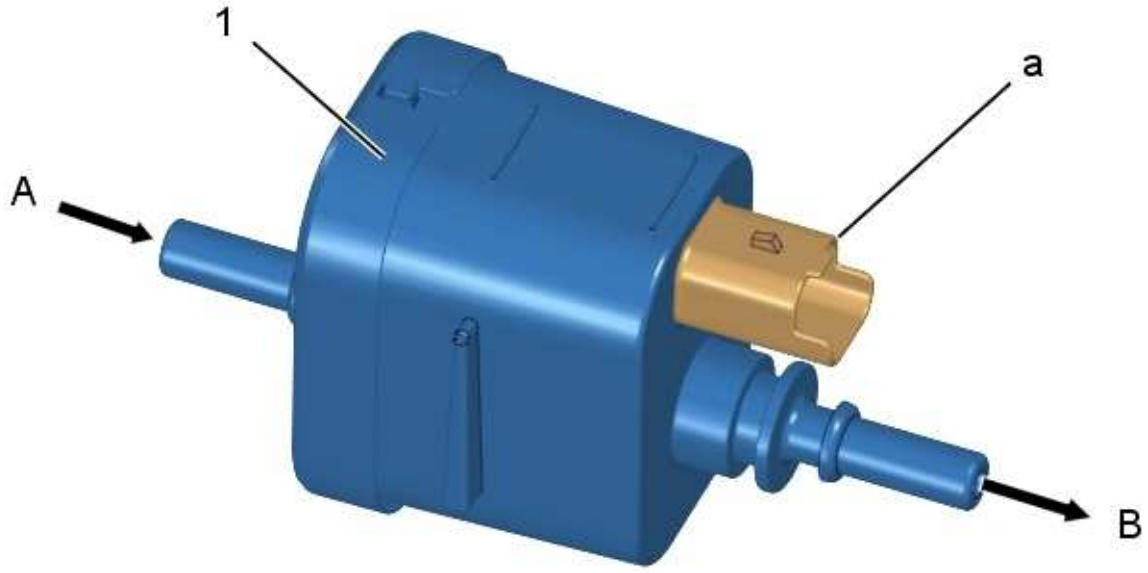

b1ha0hxd

(1) Diesel fuel additive pump.

"a" 2-way yellow connector.

"A" Additive inlet coming from the additive tank.

"B" Outlet to fuel additive injection valve.

Supplier: TI AUTOMOTIVE.

2 - ROLE

The fuel additive pump injects a precise quantity of additive under pressure into the fuel additive circuit each time the fuel tank is refilled according to the volume of fuel added.

3 - FUNCTION

The fuel additive pump is a positive displacement metering pump.

The quantity of fuel additive delivered depends on the unit capacity of the fuel additive pump.

The unit capacity of the fuel additive pump is 6,45 mm3.

Depending on the quantity of fuel added, the engine management ECU determines the quantity of fuel additive to be injected into the fuel tank.

The engine management ECU controls the fuel additive pump by means of an OCR signal.

NOTE : pulse of the OCR signal = one injection of a capacity of 6,45 mm3

Features of the OCR signal :

- Opening ratio of 34%
- Frequency of the OCR signal 45Hz
- Amplitude of the OCR signal 12 volts

NOTE : OCR : Open cycle ratio

Designation	Minimum tolerance	Nominal value	Maximum tolerance
Supply voltage	10,5 volts	13,5 volts	16 volts

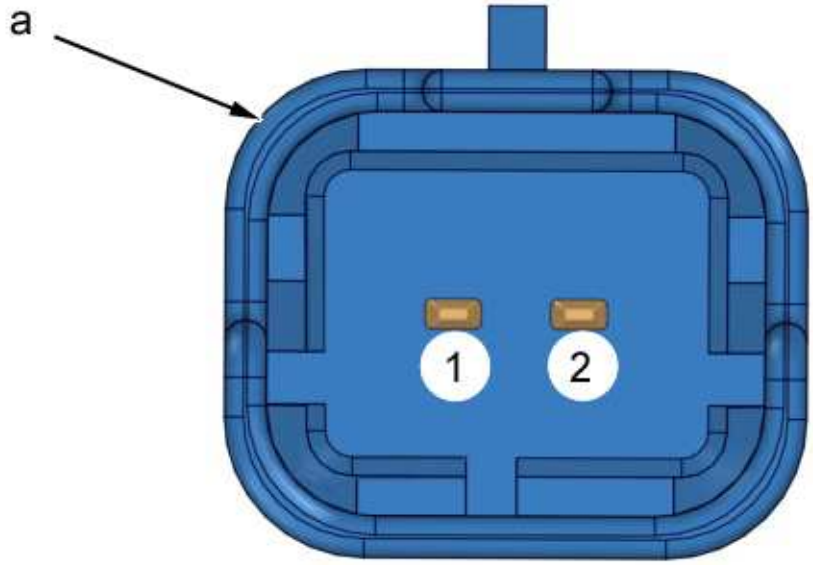

d2aa07gd

"a" 2-way yellow connector	
Channel No.	Allocation of channels of connector
1	Battery +ve supply
2	Control of the fuel additive pump (OCR)

4 - LEARNING/INITIALISATION

Programming is necessary if the part is removed/refitted ; Refer to the documentation : Diagnostic equipment functions : Programming/initialisation.

DESCRIPTION - FUNCTION : VARIABLE GEOMETRY TURBOCHARGER, WITH POSITION REPEAT SENSOR

1 - DESCRIPTION

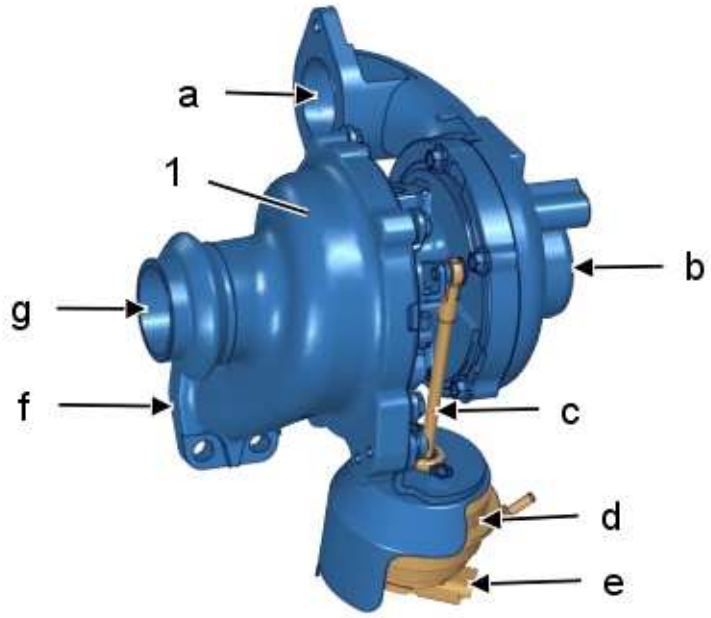

b1ha0dsd

(1) Variable geometry turbocharger .

"a" Compressor outlet .

"b" Compressor inlet .

"c" Exhaust turbine mobile fins control rod .

"d" Variable geometry control capsule .

"e" 3-way black connector (Position repeat sensor) .

"f" Exhaust gas inlet .

"g" Exhaust gas outlet .

make : HONEYWELL .

2 - ROLE

The variable geometry turbocharger provides a constant pressure whatever the operating conditions .

The variable geometry turbocharger is used :

- To increase the speed of the exhaust gases which strike the turbine at low engine speeds
- To reduce the speed of the exhaust gases which strike the turbine at high engine speeds
- To adapt the turbine to a variation in exhaust gas flow

3 - FUNCTION

The engine is turbocharged by a variable geometry turbocharger controlled by the engine management ECU by means of a proportional electrovalve .

The turbocharger position repeat sensor consists of a potentiometer situated on the turbocharger control capsule .

The turbocharger position repeat sensor indicates precisely the exact position of the mobile fins of the exhaust turbine .

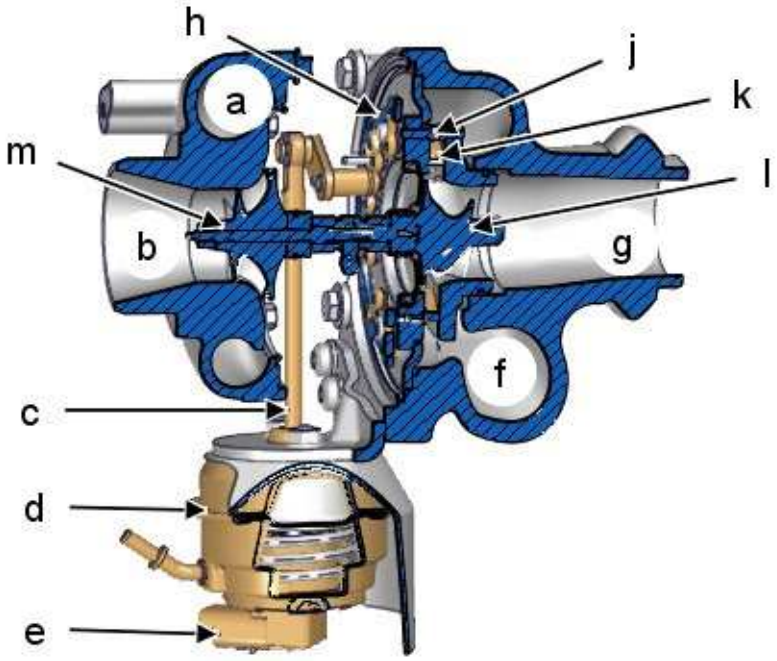

b1ha0dtd

"a" Compressor outlet .

"b" Compressor inlet .

"c" Exhaust turbine mobile fins control rod .

"d" Variable geometry control capsule .

"e" 3-way black connector (Position repeat sensor) .

"f" Exhaust gas inlet .

"g" Exhaust gas outlet .

"h" Mobile drive plate .

"j" Fin lever .

"k" Mobile fins .

"l" Exhaust turbine .

"m" Inlet air compressor .

The turbocharger consists of two separate chambers :

- A chamber connected to the engine exhaust function
- A chamber connected to the engine inlet function

The exhaust turbine and the inlet air compressor are joined to each other by a shaft .

The turbine, activated by the exhaust gas, drives the compressor which compresses the inlet air .

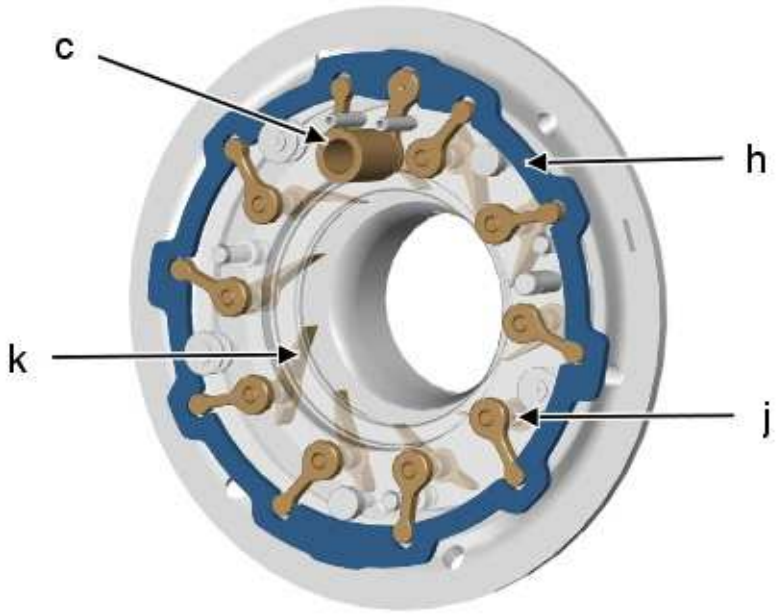

b1ha0dud

"c" Exhaust turbine mobile fins control rod .

"h" Mobile drive plate .

"j" Fin lever .

"k" Mobile fins .

The variable geometry control capsule changes the position of the mobile drive plate via the intermediary of the control rod .

The change in position of the mobile drive plate causes the fins to pivot .

The rotation of the fins on their respective shafts permits :

- Variation of the inlet section of the exhaust gases onto the exhaust turbine
- More precise direction of the exhaust gases onto the exhaust turbine

The regulation of the boost pressure is progressive and is managed by the engine management ECU mapping .

> **NOTE :** The mobile fins are in the open position when the electrovalve is not commanding the control rod of the pressure regulator of the variable geometry turbocharger

> **WARNING :** Before stopping the engine, wait for the engine speed to drop to idle; failure to comply with this condition will entail the destruction of the turbocharger over time (Lack of lubrication)

3 - 1 - Operation at low engine speed

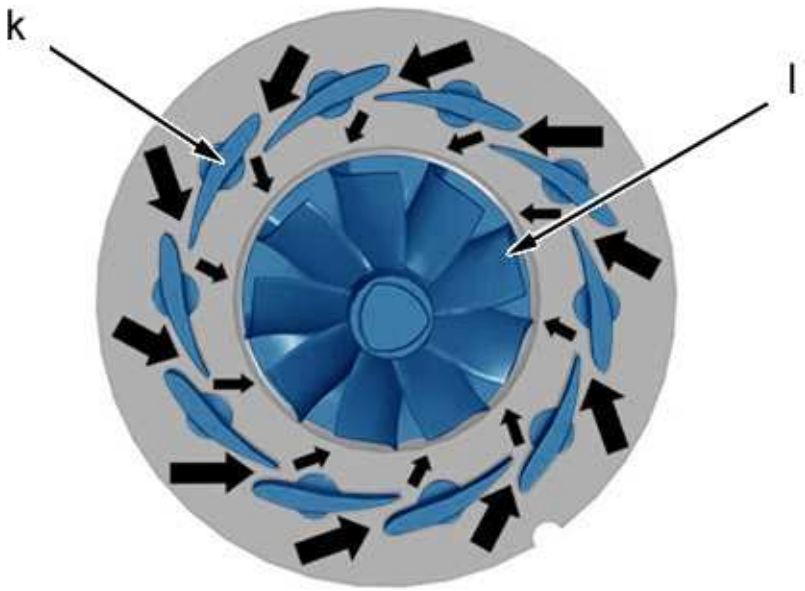

b1ha0dvd

"k" Mobile fins .

'l" Exhaust turbine .

At low engine speed the kinetic energy of the exhaust gases is weak :

- The variable geometry turbocharger increases the kinetic energy of the exhaust gases by decreasing the section through which the exhaust gases must pass
- Furthermore the mobile fins ("k") in the closed position precisely direct the exhaust gases onto

the exhaust turbine ("l")

NOTE : With these two conditions the rotation speed of the exhaust turbine is accelerated at low engine speed

3 - 2 - Operation at high engine speed

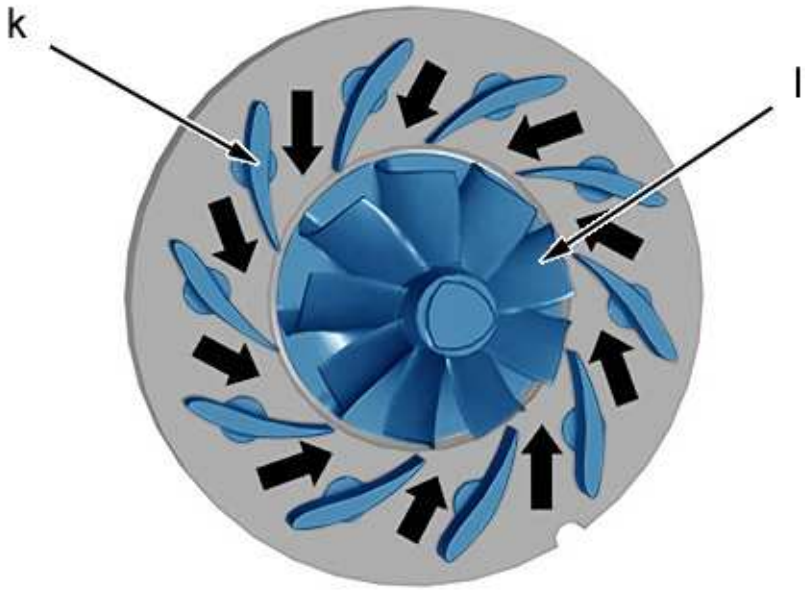

b1ha0dwd

"k" Mobile fins .

"l" Exhaust turbine .

At high engine speed the kinetic energy of the exhaust gases is strong :

- The variable geometry turbocharger decreases the kinetic energy of the exhaust gases by increasing the section through which the exhaust gases can pass
- Furthermore the mobile fins ("k") in the open position direct the exhaust gases onto the exhaust turbine ("l") in a less direct manner

NOTE : With these two conditions the rotation speed of the exhaust turbine is reduced at high engine speed

4 - ELECTRICAL FEATURES

4 - 1 - Data (Position repeat sensor)

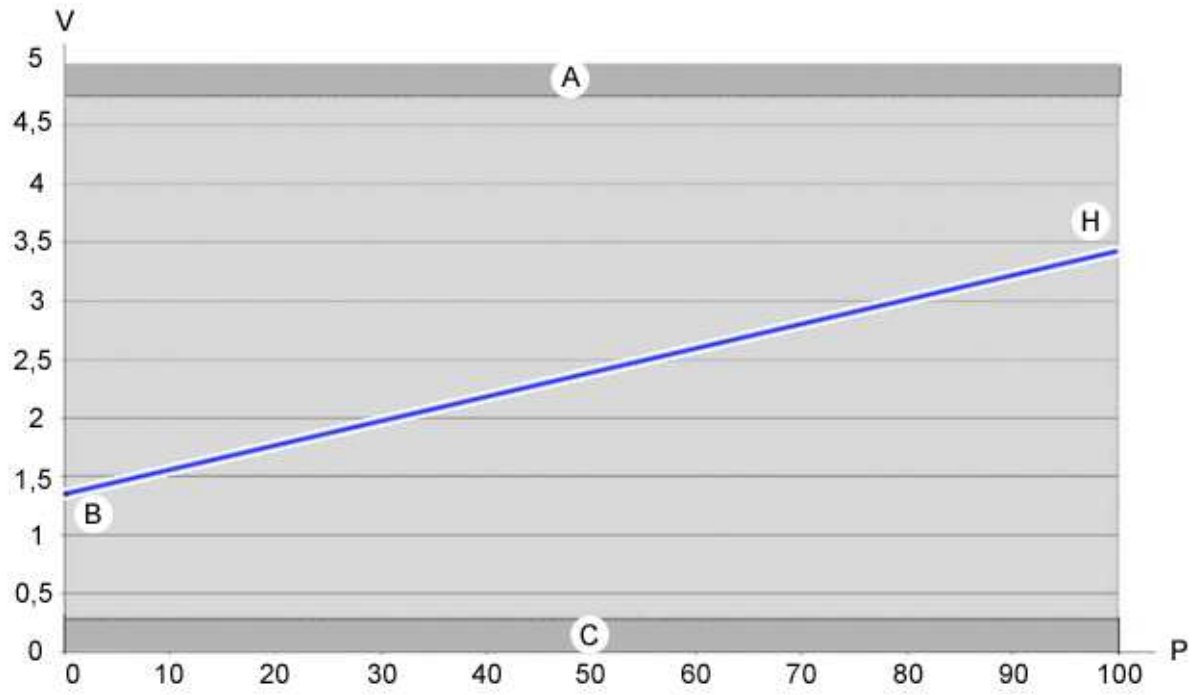

d4ea0h3d

"A" Diagnosis zone 1 .

"B" Variable geometry open .

"C" Diagnosis zone 2 .

"H" Variable geometry closed .

"V" Supply voltage (volts) .

"P" Actuator rod position (%) .

Designation	Minimum tolerance	Nominal value	Maximum tolerance
Supply voltage	4,75V	5V	5,25V
Supply current	1,1 mA	-	2,6 mA

4 - 2 - Connector (Position repeat sensor)

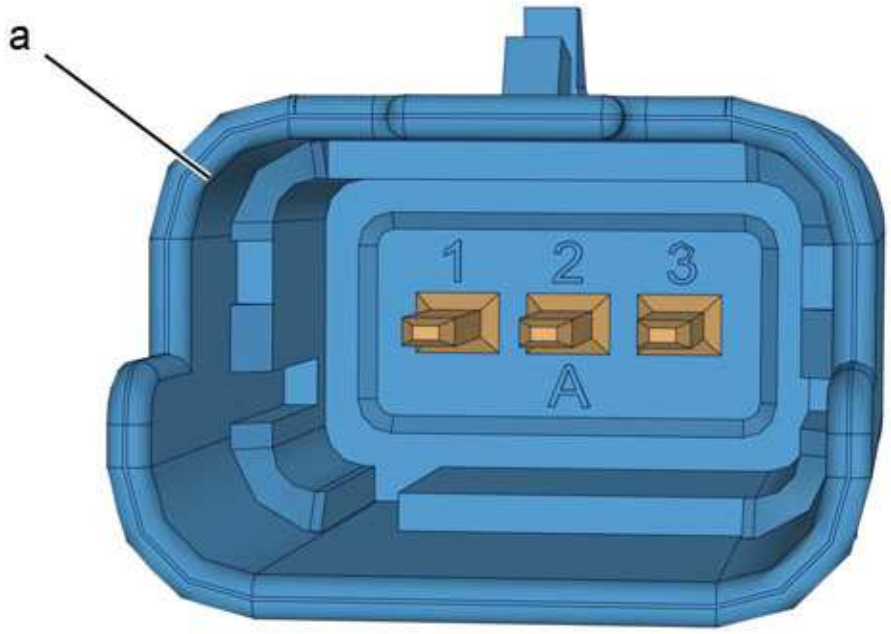

d4ea09xd

"a" 3-way black connector (Position repeat sensor)	
Channel No.	Allocation of channels of connector
1	signal
2	5 volts supply
3	Earth

5 - PROGRAMMING/INITIALISATION

Programming is necessary if the part is removed/refitted ; Refer to the diagnostic tools documentation : Programming/initialisation .

DESCRIPTION - FUNCTION : PROPORTIONAL ELECTROVALVE

1 - DESCRIPTION

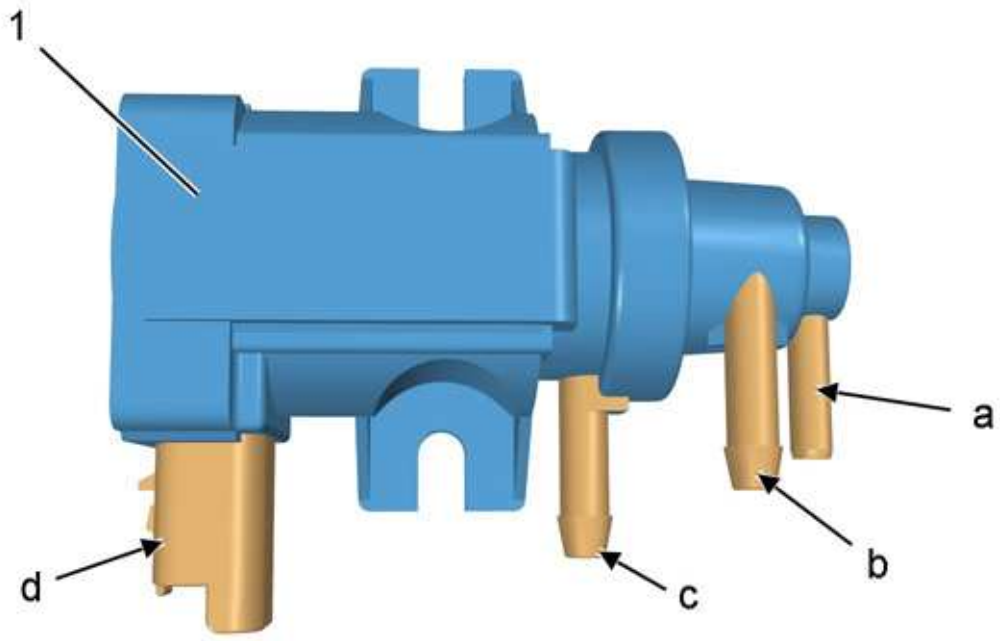

d4ea05cd

(1) Proportional electrovalve .

"a" Vacuum inlet .

"b" Vacuum outlet .

"c" breather .

"d" 2-way black connector .

make : BITRON/PIERBURG .

The solenoid valve is a solenoid valve that is normally closed .

2 - ROLE

The solenoid valve regulates and limits the control vacuum entering a pneumatic actuator, by means of the vehicle's vacuum circuit .

3 - FUNCTION

The solenoid control is an OCR (Opening Cyclical Ratio) type control .

The proportional electrovalve controlled by an OCR voltage is connected to the following components :

- Atmospheric pressure
- Vacuum supplied by the vacuum pump
- Pneumatic control actuator

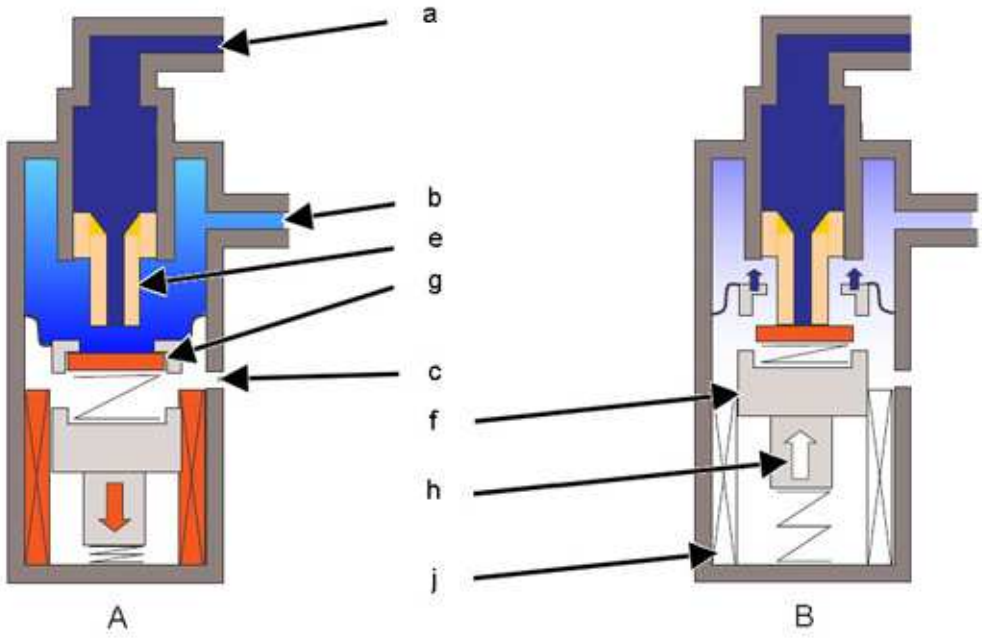

d4ea05dd

"A" Coil supplied .

"B" Coil not supplied .

"a" Vacuum inlet .

"b" Vacuum outlet .

"c" breather .

"e" Needle .

"f" Mobile core .

"g" Needle seating .

"h" Control direction .

"j" Coil .

In rest position, the vacuum outlet is linked to the air vent .

When the coil is being supplied by the OCR voltage, the needle closes the air vent to a greater or lesser extent .

When the needle is completely blocking the air vent, the vacuum outlet is linked directly to the vacuum inlet .

The pressure supplied by the electrovalve is included between the atmospheric pressure and the vacuum pump vacuum .

4 - ELECTRICAL FEATURES

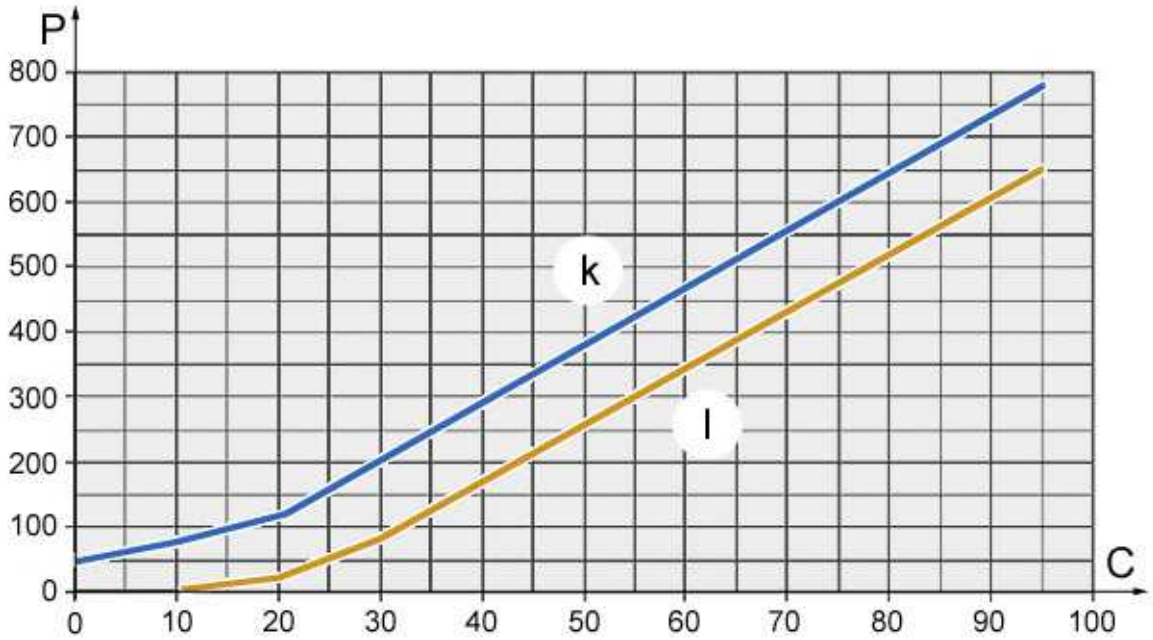

d4ea05ed

"C" RCO control (%) .

"P" Control vacuum (mbar) .

"k" Maximum vacuum (mbar) .

"l" Minimum vacuum (mbar) .

RCO control (%)	Minimum control vacuum (mbar)	Maximum control vacuum (mbar)
0	0	50
10	10	80
20	20	120
30	80	200
95	650	780
100	700	850

Designation	Minimum tolerance	Nominal value	Maximum tolerance	Unit
Supply voltage (Ualim)	10,5	13,6	16	V
Supply current (If U alim = 16 V and the OCR control =	-	-	2,2	A

100 %)				
Control frequency	245	250	255	Hz
Resistance at 23 °C	13,95	16,5	17,05	Ohms

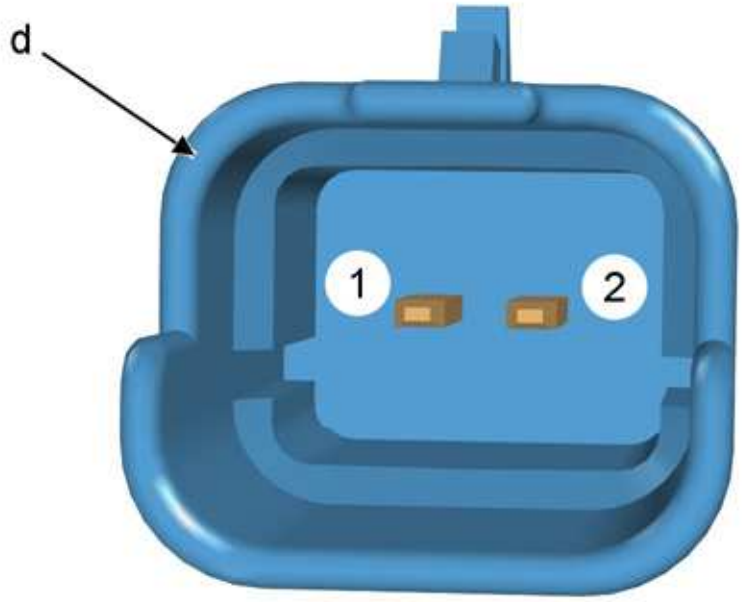

d2aa015d

"d" 2-way black connector	
Termina	Allocation of channels of connector
1	Supply
2	Open cycle ratio (OCR) control

5 - LEARNING / INITIALISATION

Not applicable .

DESCRIPTION - OPERATION : INLET AIR MIXER UNIT WITH POSITION REPEAT SENSOR

1 - DESCRIPTION

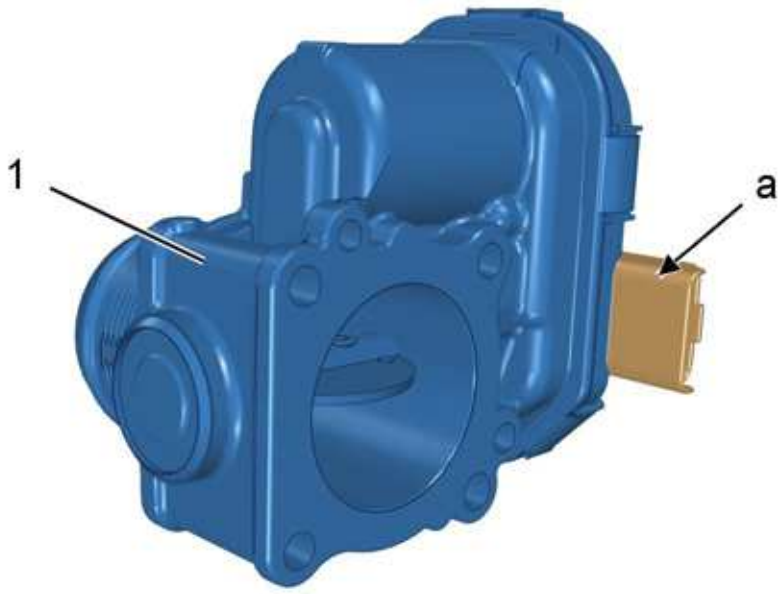

d4ea0lcd

(1) Inlet air mixer unit with position repeat sensor.

"a" 5 way grey connector.

The position repeat sensor is a Hall effect sensor.

2 - ROLE

Role of the inlet air mixer unit with position repeat sensor :

- To monitor the inlet pressure so as to optimise the exhaust gas recycling (EGR) rate
- To prevent air from passing into the inlet circuit when the engine is switched off (cut-off function)

3 - OPERATION

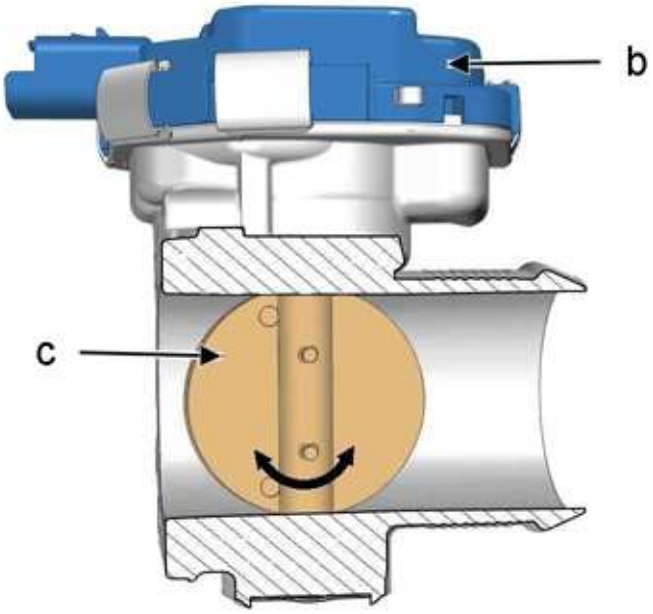

d4ea0ldd

"b" Actuator of the inlet air unit with position repeat sensor.

"c" Butterfly.

The inlet air mixer unit actuator "b" receives a position reference value from the engine management ECU.

The electric motor controls the butterfly "c".

4 - ELECTRICAL SPECIFICATIONS

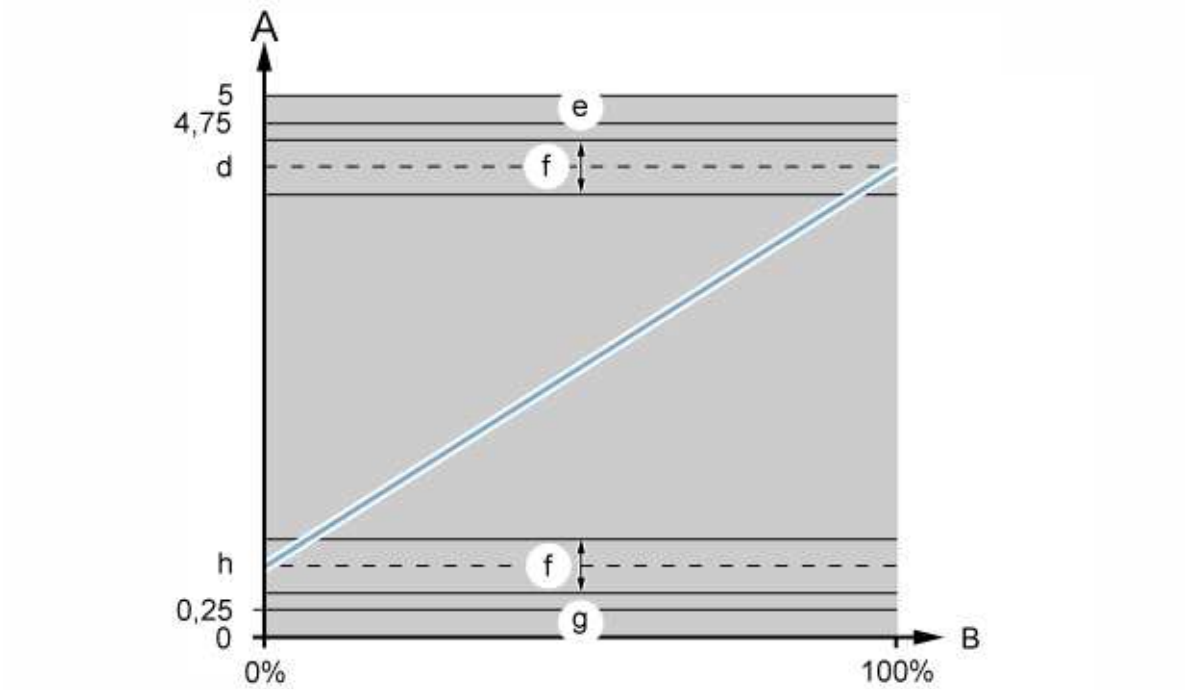

d4ea0led

"A" Output voltage(Volt).

"B" Exclusion flap position (0% = open ; 100% = closed).

"d" Voltage : Maximum value (4,35 V).

"e" Diagnosis zone 2.

"f" ± 0,25 V.

"g" Diagnosis zone 1.

"h" Voltage : Lower limit (0,65 V).

Description	Minimum tolerance	Nominal value	Maximum tolerance
Supply voltage	4,75 V	5 V	5,25 V
Supply current	0,5 mA	8 mA	10 mA

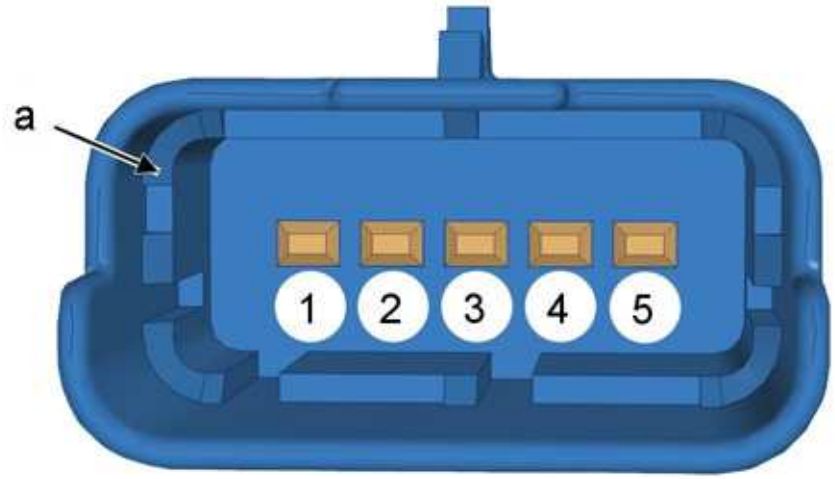

d2aa052d

"a" 5 way grey connector	
Number of channels	Allocation of the tracks of the connector
1	Control by electric motor +
2	Control by electric motor -
3	Earth
4	Output signal
5	5 volts supply

5 - INITIALISATION/INITIALISATION

Programming is necessary if the component is replaced.

DESCRIPTION - OPERATION : ELECTRICALLY-CONTROLLED EXHAUST GAS RECYCLING MODULE (WITH POSITION COPY SENSOR)

NOTE : EGR : Exhaust gas recycling

1 - DESCRIPTION

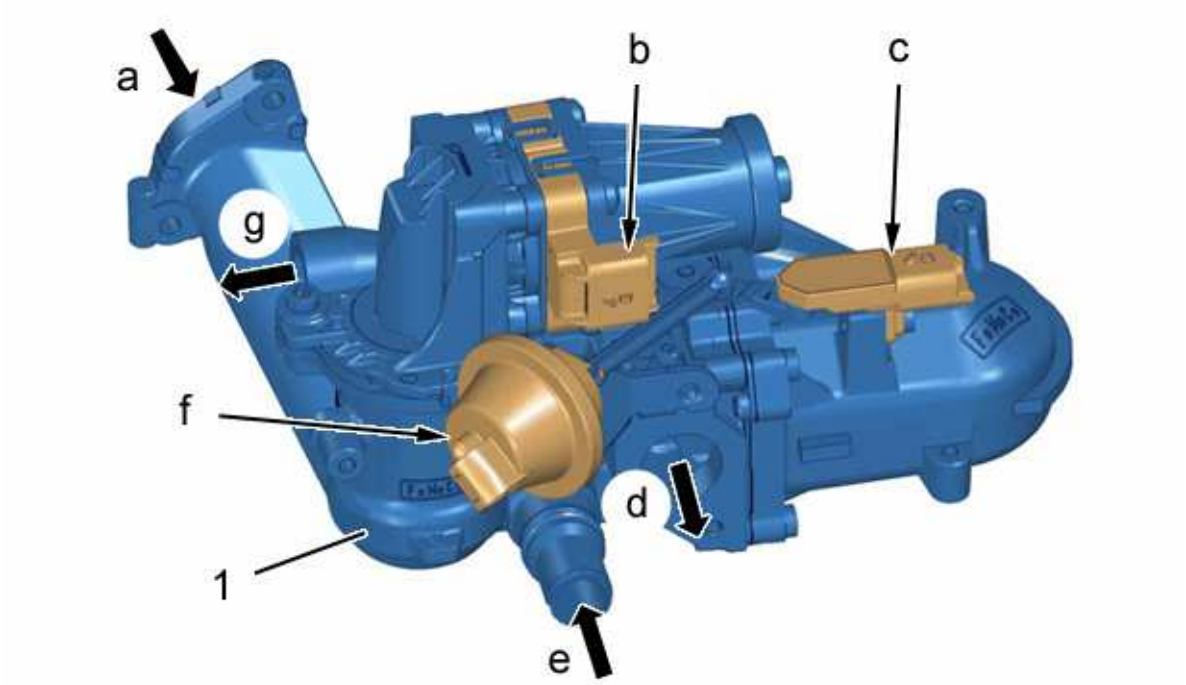

b1ka00dd

(1) Electrically-controlled exhaust gas recycling module(With integral position copy sensor).

"a" Exhaust gas inlet.

"b" 5 way blue connector (Electrically-controlled exhaust gas recycling valve).

"c" 3 way blue connector (Position copy sensor for the EGR heat exchanger by-pass flap).

"d" Exhaust gas outlet.

"e" Water entry.

"f" Control capsule (By-pass flap with integral position copy sensor).

"g" Water outlet.

Supplier : PIERBURG.

2 - ROLE

Role of the exhaust gas recycling module (E.G.R) (With integral position copy sensor) :

- Allowing the intake of a specific quantity of recycled exhaust gas into the air supply circuit
- Cooling or otherwise of the recycled exhaust gases

3 - OPERATION

3 - 1 - Exhaust gas recycling valve closed

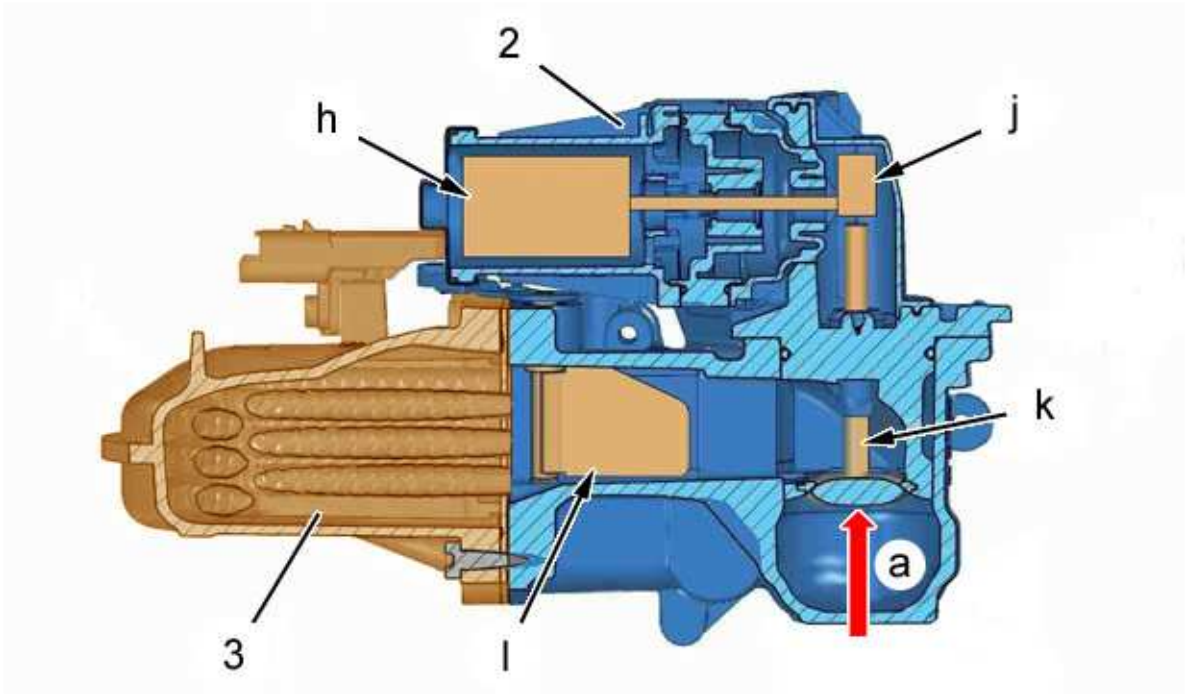

b1ka00ed

(2) Barrel : Exhaust gas recycling valve (EGR).

(3) Exhaust gas recirculation heat exchanger .

"a" Exhaust gas inlet.

"h" Engine.

"j" Eccentric shaft .

"k" Valve : Exhaust gas recycling valve (EGR).

"l" By-pass flap/Exhaust gas recirculation heat exchanger .

Exhaust gas recycling valve closed : No recirculation of the exhaust gas.

3 - 2 - Exhaust gas recycling valve open - By-pass flap/EGR heat exchanger closed (By-pass position)

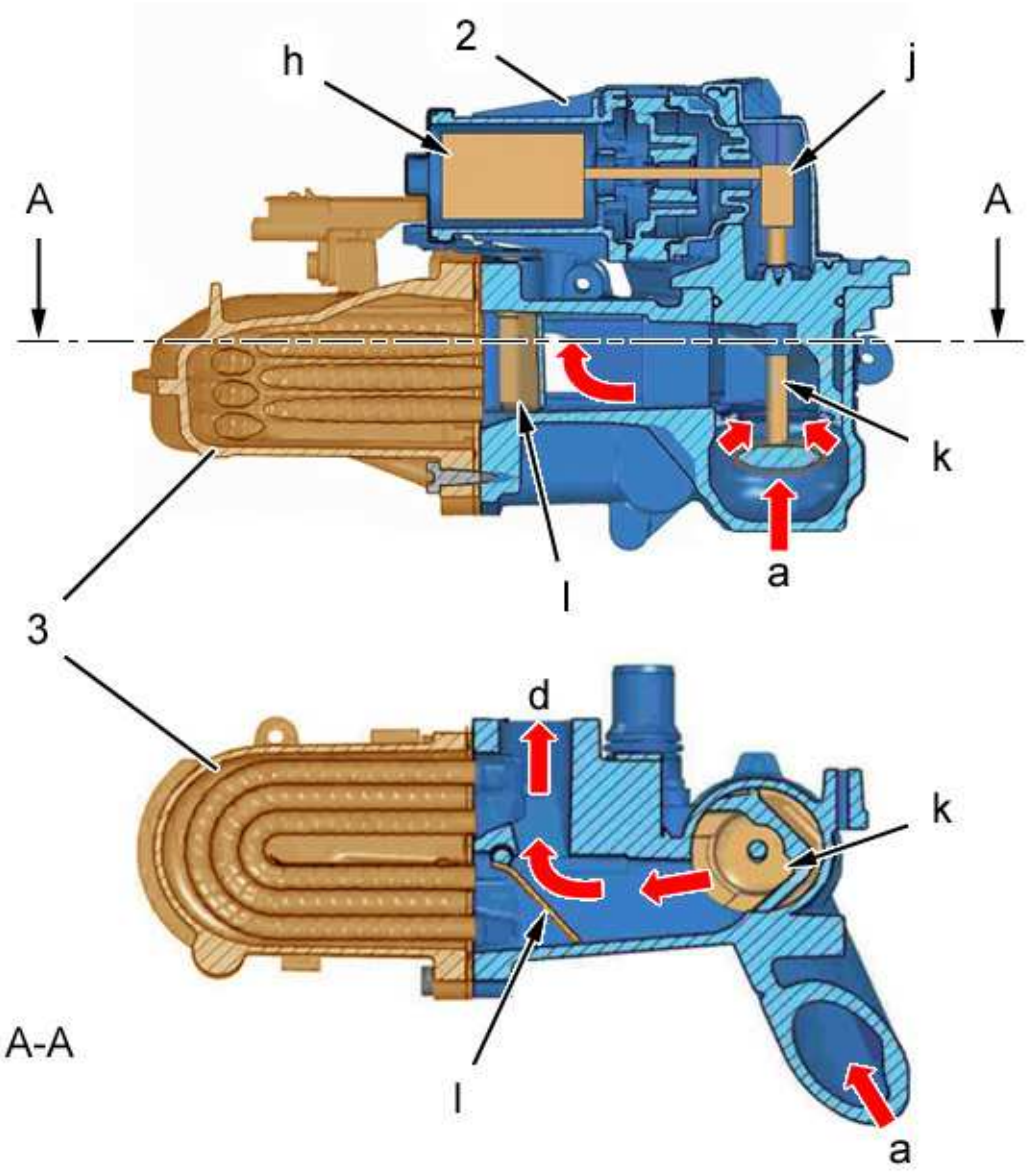

b1ka00fp

(2) Barrel : Exhaust gas recycling valve.

(3) Exhaust gas recirculation heat exchanger .

"a" Exhaust gas inlet.

"d" Exhaust gas outlet.

"h" Engine.

"j" Eccentric shaft .

"k" Valve : Exhaust gas recycling valve.

"l" By-pass flap/Exhaust gas recirculation heat exchanger .

The motor of the EGR valve is controlled by an open cycle ratio (OCR) signal : Opening of the EGR valve is proportional.

Exhaust gas recycling valve open : Exhaust gas recycling.

By-pass flap/EGR heat exchanger closed :

- The recycled exhaust gases do not pass through the exchanger
- The recycled exhaust gases pass are not cooled

The EGR heat exchanger/by-pass flap has only two positions (Open - Closed).

3 - 3 - Exhaust gas recycling valve open- By-pass flap/EGR heat exchanger open (Exchanger position)

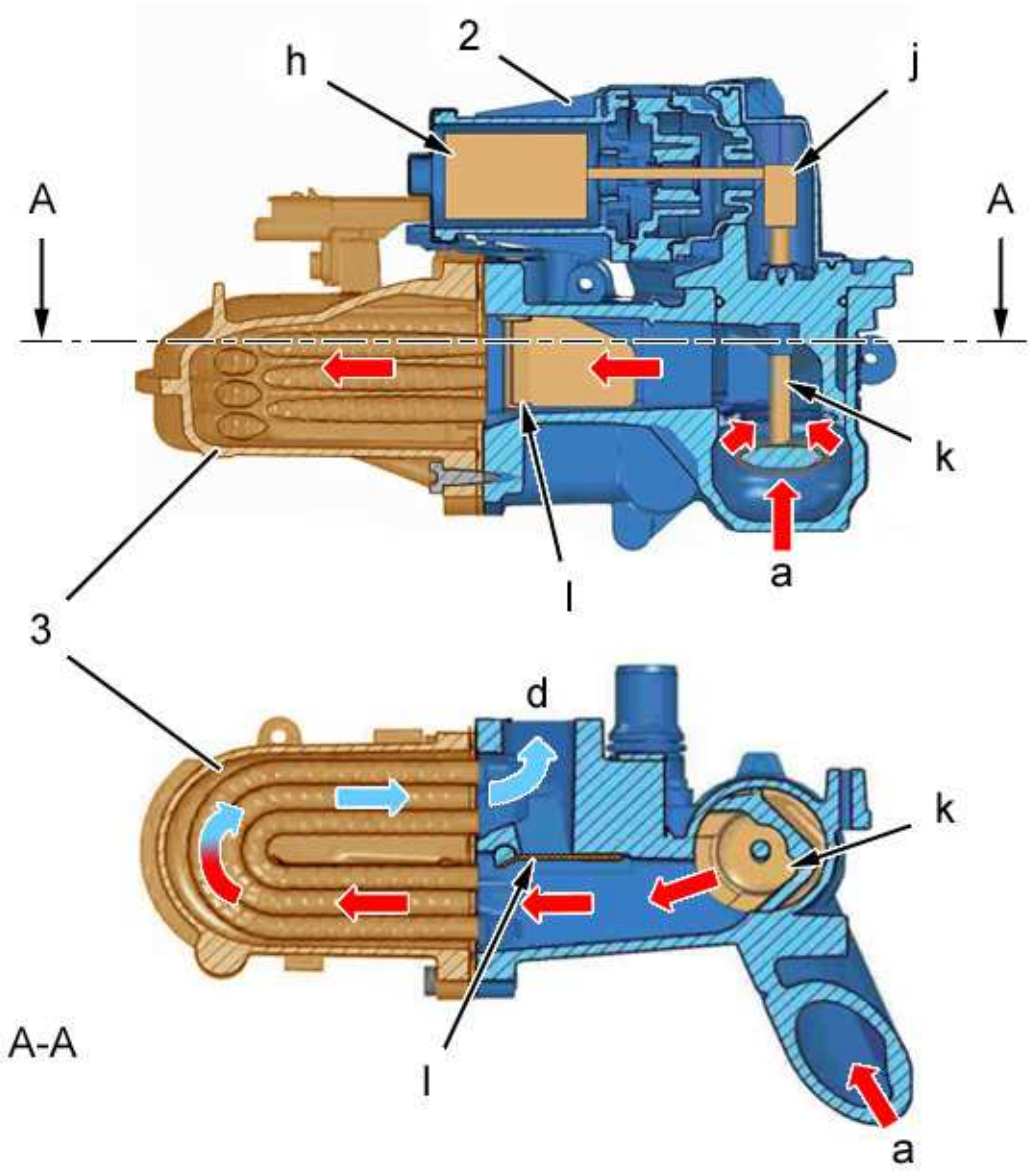

b1ka00gp

(2) Barrel : Exhaust gas recycling valve.

(3) Exhaust gas recirculation heat exchanger .

"a" Exhaust gas inlet.

"d" Exhaust gas outlet.

"h" Engine.

"j" Eccentric shaft .

"k" Valve : Exhaust gas recycling valve.

"l" By-pass flap/Exhaust gas recirculation heat exchanger .

Exhaust gas recycling valve open : Exhaust gas recycling.

EGR heat exchanger open :

- The recycled exhaust gases pass through the EGR heat exchanger
- The recycled exhaust gases are cooled

4 - ELECTRICAL FEATURES

Description	Minimum tolerance	Nominal value	Maximum tolerance
Electric motor supply voltage	10,5 V	13,5 V	16 V
Motor resistance	2,04 ohms	2,40 ohms	2,76 ohms
Supply voltage of the EGR valve sensor	4,75 V	5 V	5,25 V
Range for signal in closed position, of the EGR valve position copy sensor	0,95 V	1 V	1,05 V
Range for signal in open position, of the EGR valve position copy sensor	3,95 V	4 V	4,05 V
Supply voltage of the by-pass sensor/Exhaust gas recirculation heat exchanger	4,75 V	5 V	5,25 V
Range for signal in exchanger position, of the by-pass sensor/Exhaust gas recirculation heat exchanger	Above 0,5 V	-	Less than 1,5 v
Range for signal in by-pass position, of the by-pass sensor/Exhaust gas recirculation heat exchanger	Above 3,5 V	-	Less than 4,5 v

4 - 1 - Signal from the EGR valve position copy sensor

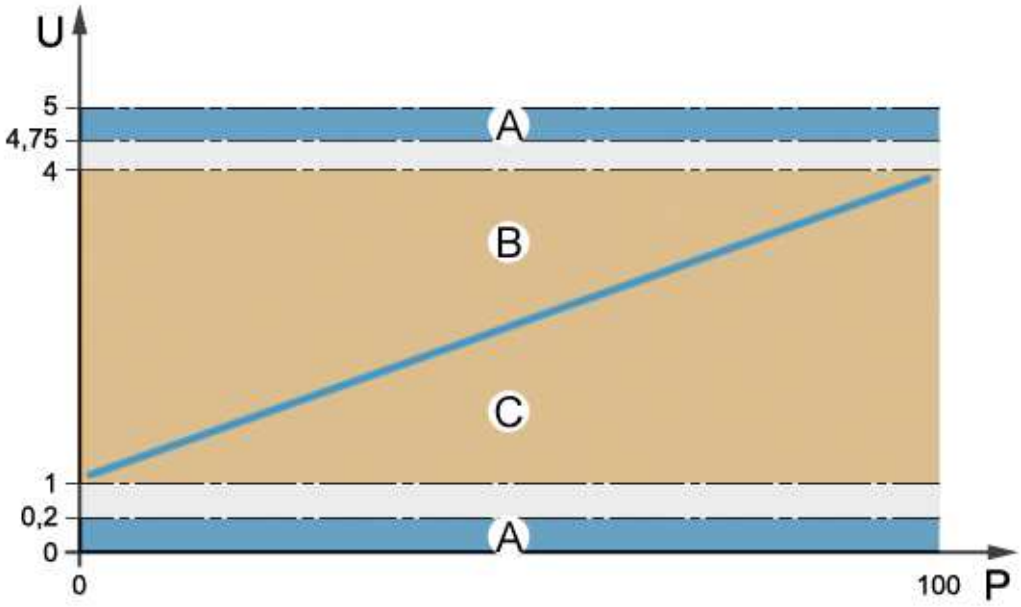

b1ka00hd

"A" Diagnosis zone .

"B" Valve open.

"C" Valve closed.

"U" Voltage ofthe signal in volts.

"P" Position of the valve (%).

4 - 2 - Control signal of the EGR valve

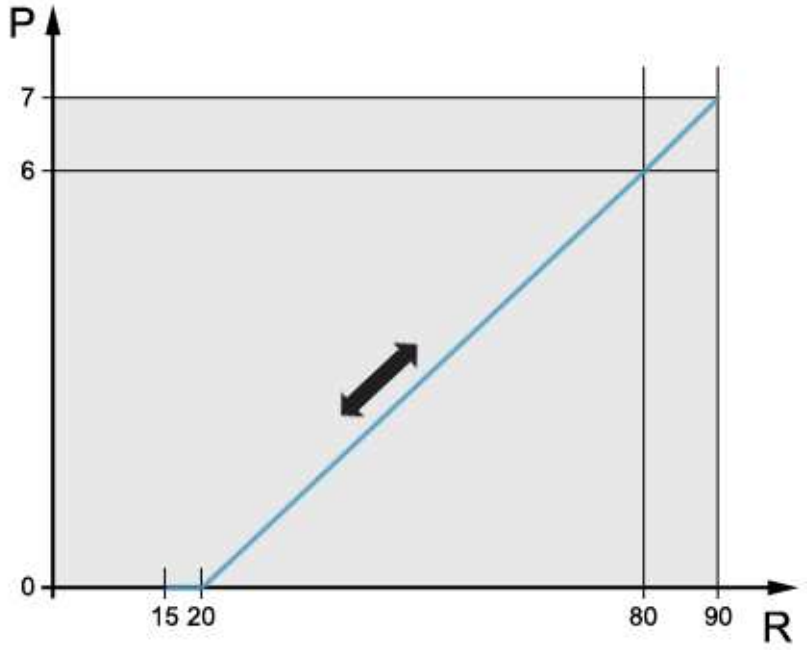

b1ka00id

"P" Opening of the valve (mm).

"R" RCO control (%).

NOTE : OCR = Open Cycle Ratio

4 - 3 - Signal from the by-pass flap position copy sensor/Exhaust gas recirculation heat exchanger

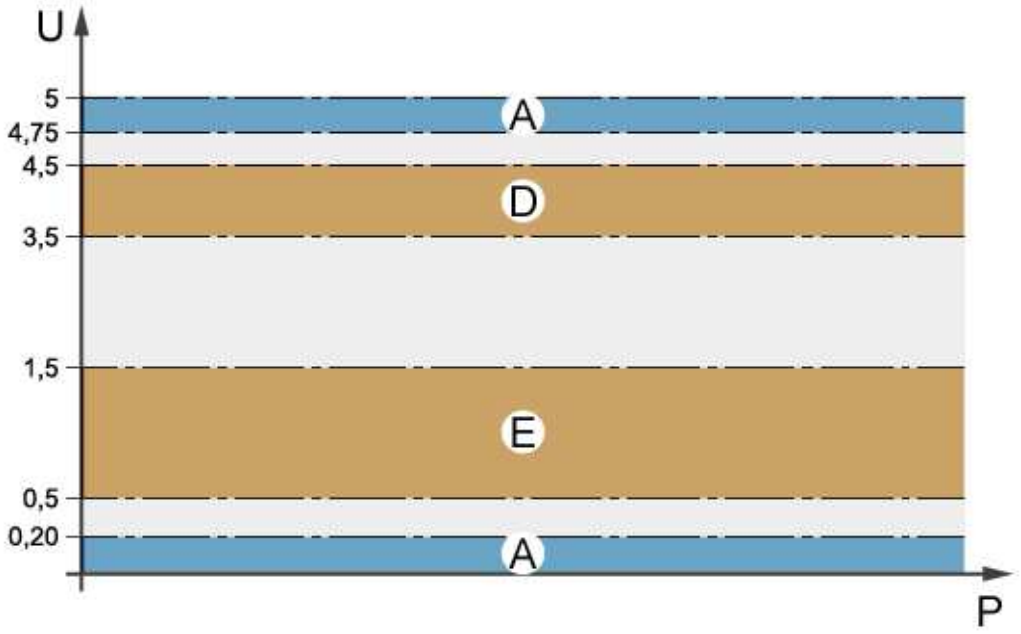

b1ka00jd

"A" Diagnosis zone .

"D" By-pass mode.

"E" Exchanger mode.

"U" Voltage ofthe signal in volts.

"P" Position of the valve (%).

4 - 4 - Connecter : Exhaust gas recycling valve

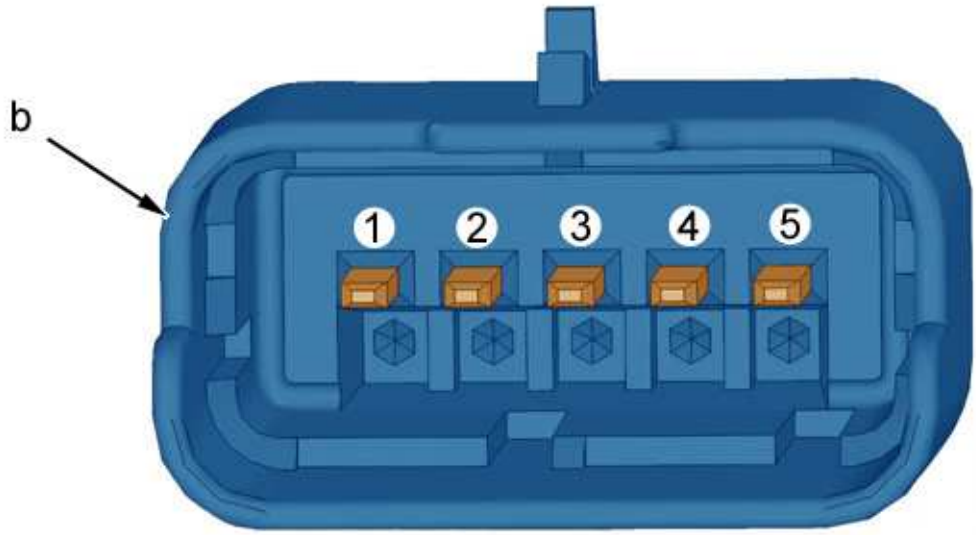

d2aa03fd

"b" 5 way blue connector	
Channel No.	Allocation of the tracks of the connector
1	Sensor + 5 V supply
2	Engine fuel system -
3	Earth
4	Engine fuel system +
5	Sensor signal

4 - 5 - By-pass connector/Exhaust gas recirculation heat exchanger

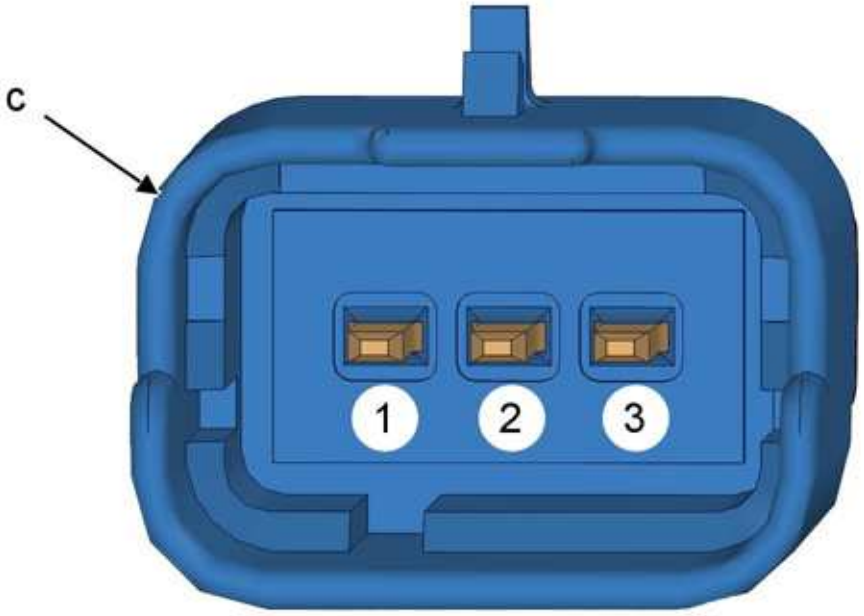

d2aa03gd

"c" 3 way blue connector	
Channel No.	Allocation of the tracks of the connector
1	Signal
2	Earth
3	Power supply +5 V

5 - INITIALISATION/INITIALISATION

Programming is necessary if the component is replaced.

DESCRIPTION - FUNCTION : EXHAUST GAS RECYCLING EXCHANGER BY-PASS ALL-OR-NOTHING SOLENOID VALVE

1 - DESCRIPTION

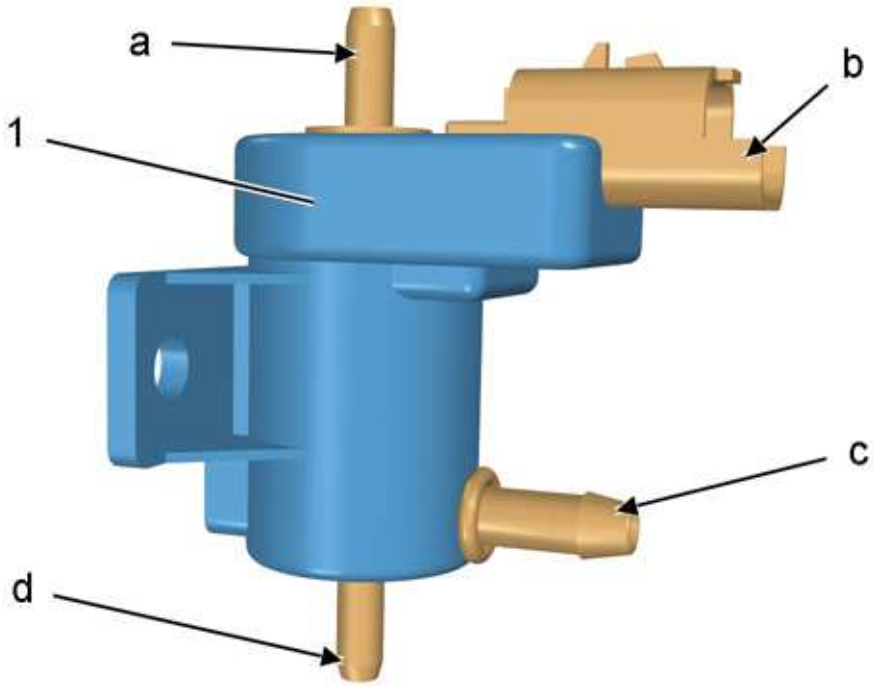

d4ea08ld

(1) All or nothing solenoid valve (EGR) :

- "a" breather
- "b" 2-way black connector
- "c" Vacuum outlet
- "d" Vacuum inlet

make : BITRON .

2 - ROLE

The solenoid valve regulates and limits the control vacuum entering a pneumatic actuator, by means of the vehicle's vacuum circuit .

3 - FUNCTION

Control of the solenoid valve is of the fixed cycle ratio type (RCF) .

The all-or-nothing solenoid valve, under fixed cycle ratio voltage, relates to the following elements :

- Atmospheric pressure (breather)
- Vacuum supplied by the vacuum pump (Input)
- Pneumatic control actuator

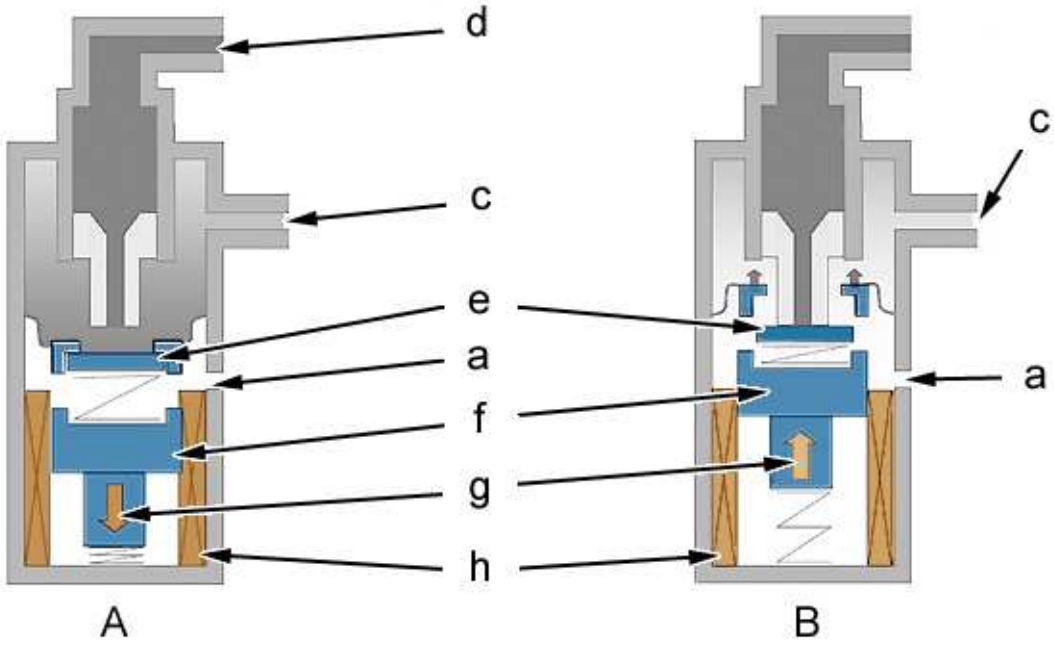

d4ea08md

"A" Coil supplied .

"B" Coil not supplied (Rest position) .

"a" breather .

"c" Vacuum outlet .

"d" Vacuum inlet .

"e" Needle seating .

"f" Mobile core .

"g" Control direction .

"h" Coil .

"A" When the coil is supplied with fixed cycle ratio type voltage :

- The needle seating "e" closes off the air vent "a"
- The vacuum outlet "c" is linked directly to the vacuum inlet "d"

"B" In idle position : The vacuum outlet "c" is linked to the air vent "a" .

4 - ELECTRICAL FEATURES

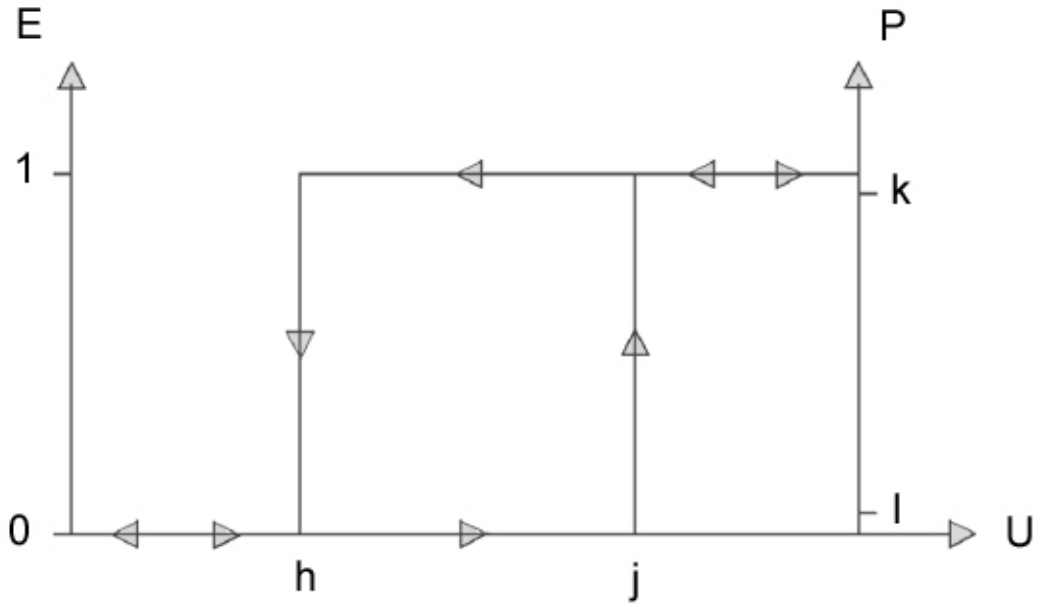

d4ea08nd

"E" Condition :

- 0 = Closed
- 1 = Open

"P" Control vacuum (Mbar) .

"U" Control voltage RCF (V) .

"h" Closing voltage = 1V .

"j" Opening voltage = 8V .

"k" Difference in pressure between the vacuum inlet and outlet greater than 700 mbar .

"l" Difference in pressure between the vacuum inlet and outlet less than 10 mbar .

The solenoid valve opens when the fixed cycle ratio control voltage is above 8 V, and closes when the fixed cycle ratio control voltage returns below 1 V .

Designation	Resistance at 23 °C
Minimal value	18 ohms
Nominal value	20 ohms
Maximal value	22 ohms

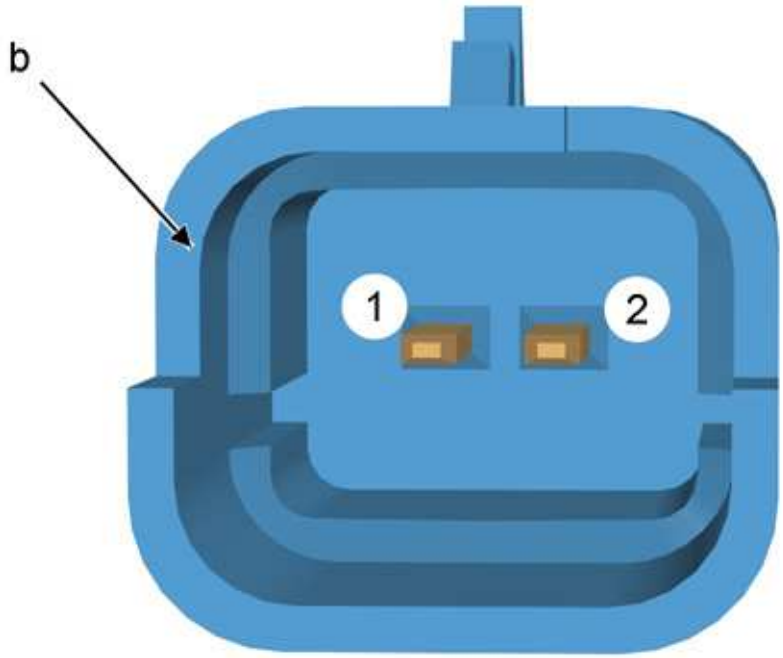

d4ea08od

"b" 2-way black connector	
Channel number	Allocation of channels of connector
1	Supply
2	Fixed cycle ratio control (RCF)

5 - LEARNING / INITIALISATION

Not applicable .

DESCRIPTION - OPERATION : OIL PUMP

1 - DESCRIPTION

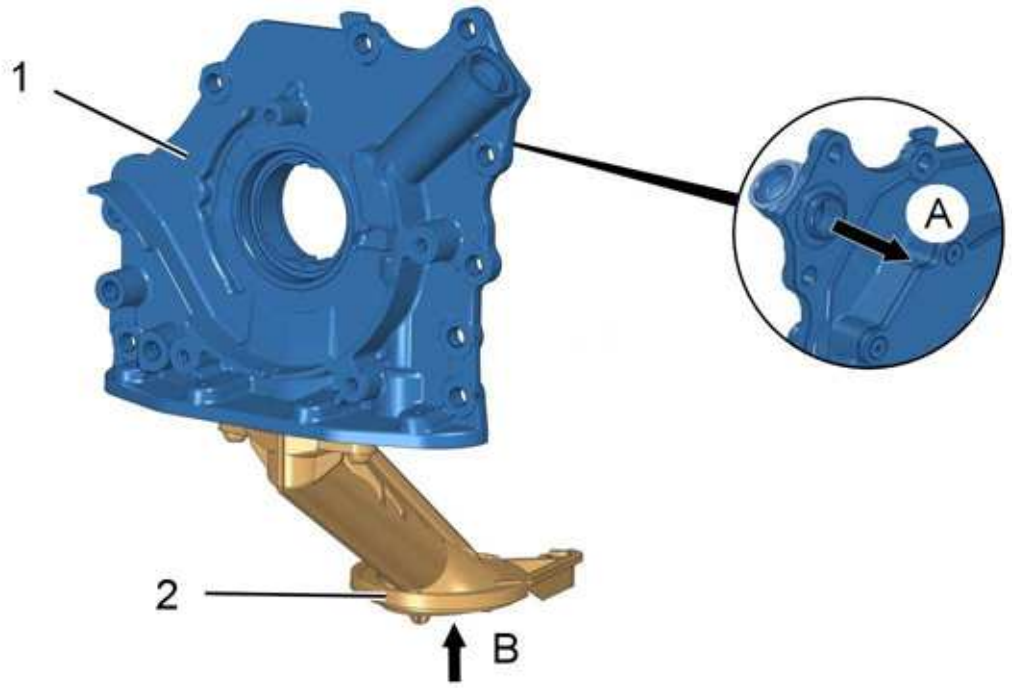

b1fa01bd

"A" Oil outlet .

"B" Oil inlet .

(1) Oil pump .

(2) Oil suction strainer .

2 - ROLE

The oil pump provides a constant oil pressure inside the engine .

3 - OPERATION

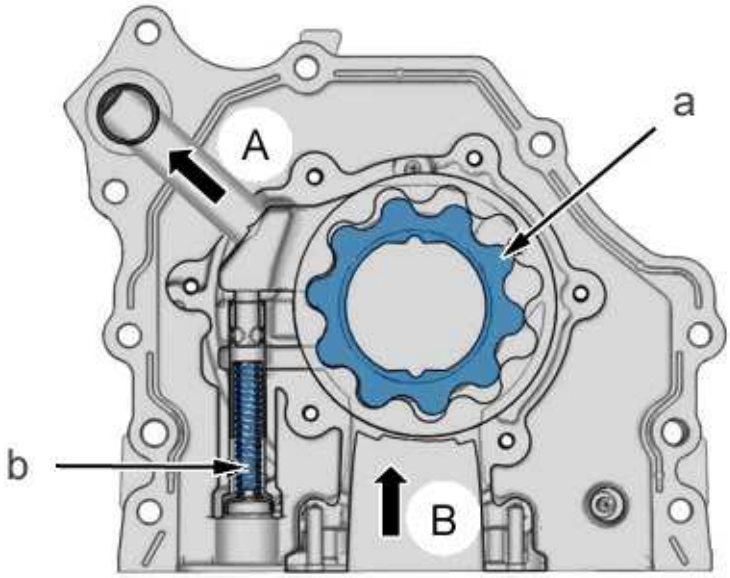

b1fa01cd

"A" Oil outlet .

"B" Oil inlet .

"a" Gear wheel .

"b" Overpressure valve return spring .

The rotation of the gear pressurises the oil .

When the pressure delivered by the pump is too great, the pressure release valve opens .

4 - DATA

Description	Value	Unit
Pressure regulation threshold	8	Bar

5 - INITIALISATION / INITIALISATION

Not applicable .

DESCRIPTION - OPERATION : ELECTRIC HEATER FOR OIL VAPOUR RECYCLING (BLOW-BY)

1 - DESCRIPTION

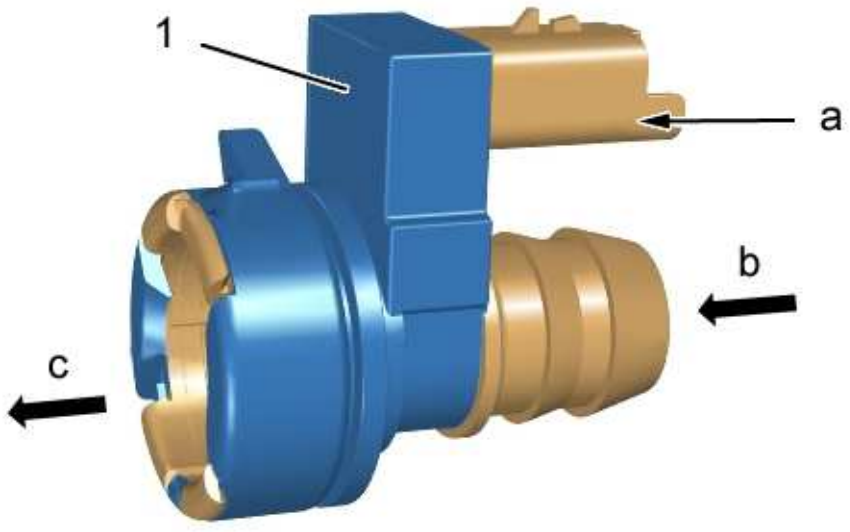

b1ka00ad

(1) Electric heater for oil vapour recycling (Blow-by) .

"a" 2-way black connector .

"b" Inlet for the recycled oil vapours (Blow-by) coming from the oil decanter .

"c" Outlet for the recycled oil vapours (Blow-by) going towards the inlet .

Supplier : HUTCHINSON .

2 - ROLE

The electric heater reheats the recycled oil vapours coming from the oil decanter in order to prevent the ducts from becoming clogged in very cold weather .

The cold causes the water normally present in the oil vapours to form an ice deposit blocking the passage of the gases into the cylinder block, which can then entail the engine breaking up due to the build-up of pressure in the sump .

3 - OPERATION

The electrical resistor in the electric heater for oil vapour recycling is operated by the engine ECU in the following conditions :

- Ignition on
- Engine running
- Outside air temperature below -2 ± 2°C
- The engine ECU no longer operates the electrical resistor in the electric diesel fuel heater when the air temperature reaches + 3 ± 2°C

NOTE : A retention of the supply of the electric diesel fuel heater may be commanded for a few seconds after the ignition is switched off, depending on the air temperature

4 - ELECTRICAL SPECIFICATIONS

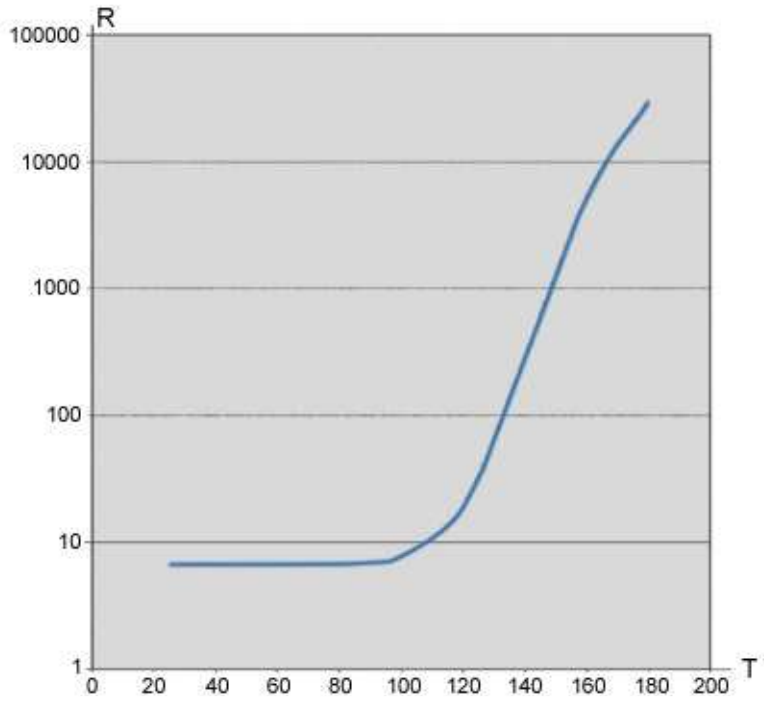

b1ka00bd

"R" Resistance (ohm) .

"T" Temperature (°C) .

Description	Minimum value	Nominal value	Maximum value
Supply voltage	8 V	13,6 V	16 V
Power	-	-	2 A (At 13,6 V)

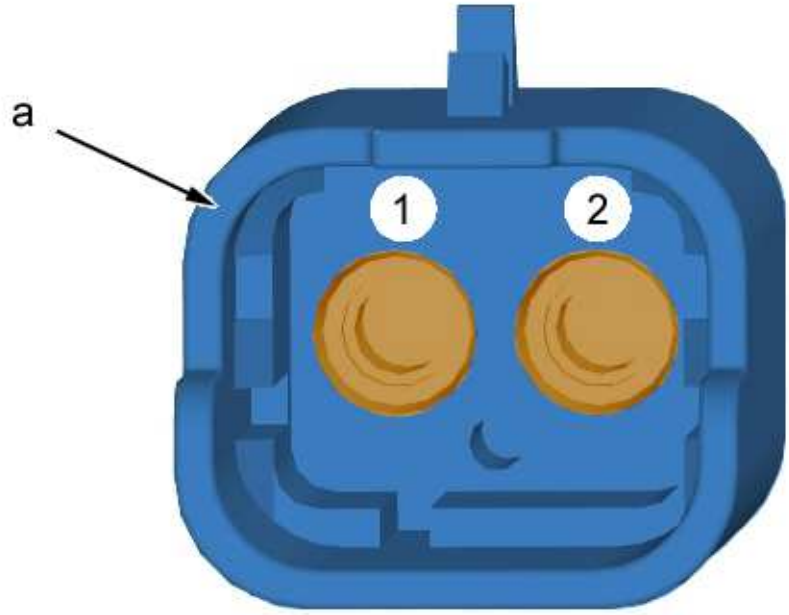

d2aa03cd

"a" 2-way black connector	
Channel No.	Allocation of the tracks of the connector
1	12V supply
2	Earth

5 - INITIALISATION / INITIALISATION

Not applicable .

DESCRIPTION - OPERATION : VACUUM PUMP

1 - DESCRIPTION



b3fa04pd

(1) Vacuum pump.

"a" Outlet to the vacuum reserve for electrovalves.

"b" Output to the brake servo unit.

Supplier : BOSCH.

2 - ROLE

The vacuum pump supplies the vacuum required to control the following components :

- Control electrovalve for the EGR heat exchanger by-pass (*)
- Proportional electrovalve controlling the variable resistance turbocharger (*)
- Proportional electrovalve controlling the fixed geometry turbocharger (*)
- Exhaust heat saver electrovalve (*)
- Brake servo

(*) According to model.

3 - OPERATION

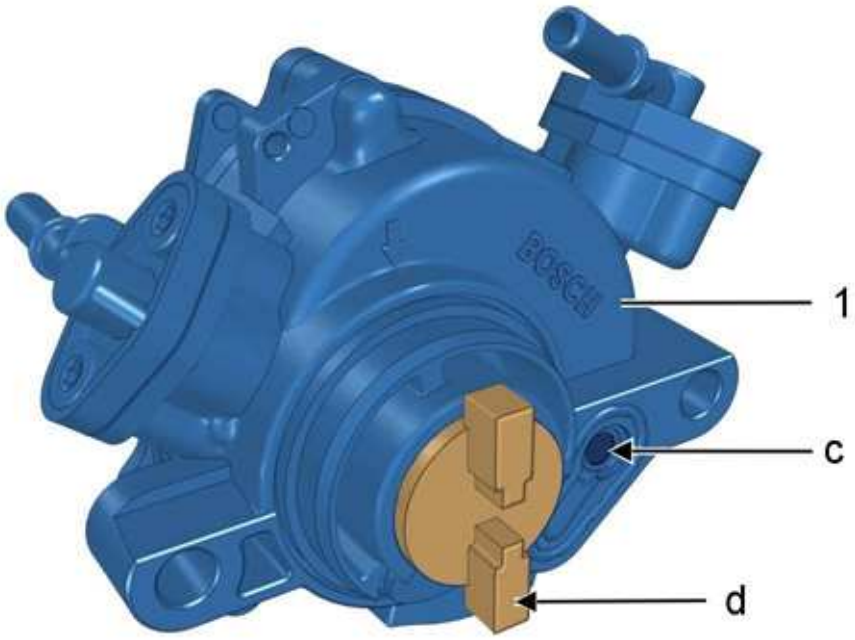

b3fa04qd

(1) Vacuum pump.

"c" Vacuum pump lubrication.

"d" Flexible coupling.

The vacuum pump is a vane pump driven directly at the end of the camshaft.

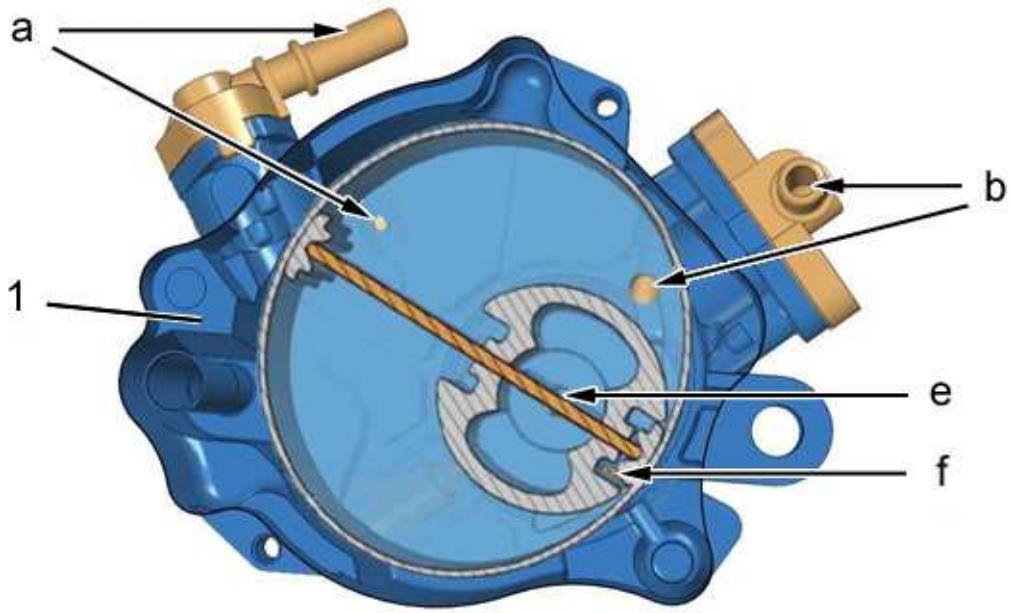

b3fa04rd

(1) Vacuum pump.

"a" Outlet to the vacuum reserve for electrovalves.

"b" Output to the brake servo unit.

"e" Moving plate.

"f" Venting.

The rotation of the moving plate creates a vacuum in the vacuum pump.

4 - ELECTRICAL SPECIFICATIONS

Not applicable.

5 - PROGRAMMING/INITIALISATION

Not applicable.

LOCATION : COMPONENTS OF THE FUEL CIRCUIT

NOTE : (*) According to version

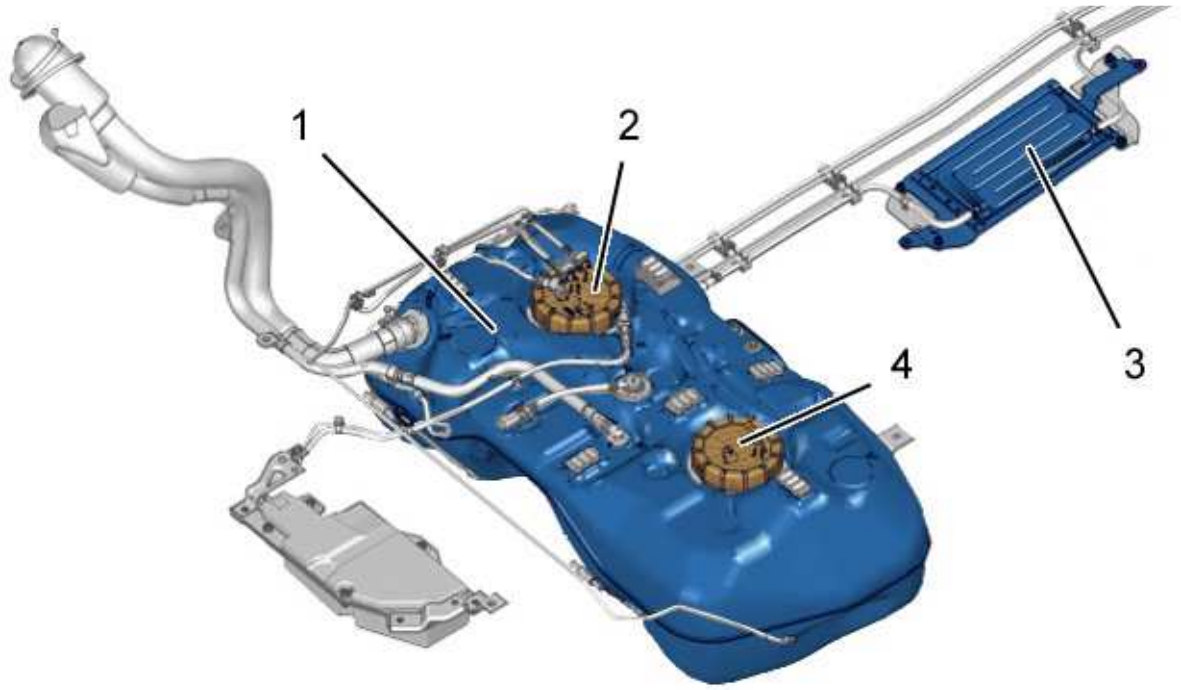

b1hb18nd

(1) Fuel tank .

(2) Primary gauge pump module.

(3) Fuel cooler (under the bodyshell).

(4) Secondary fuel gauge (*).

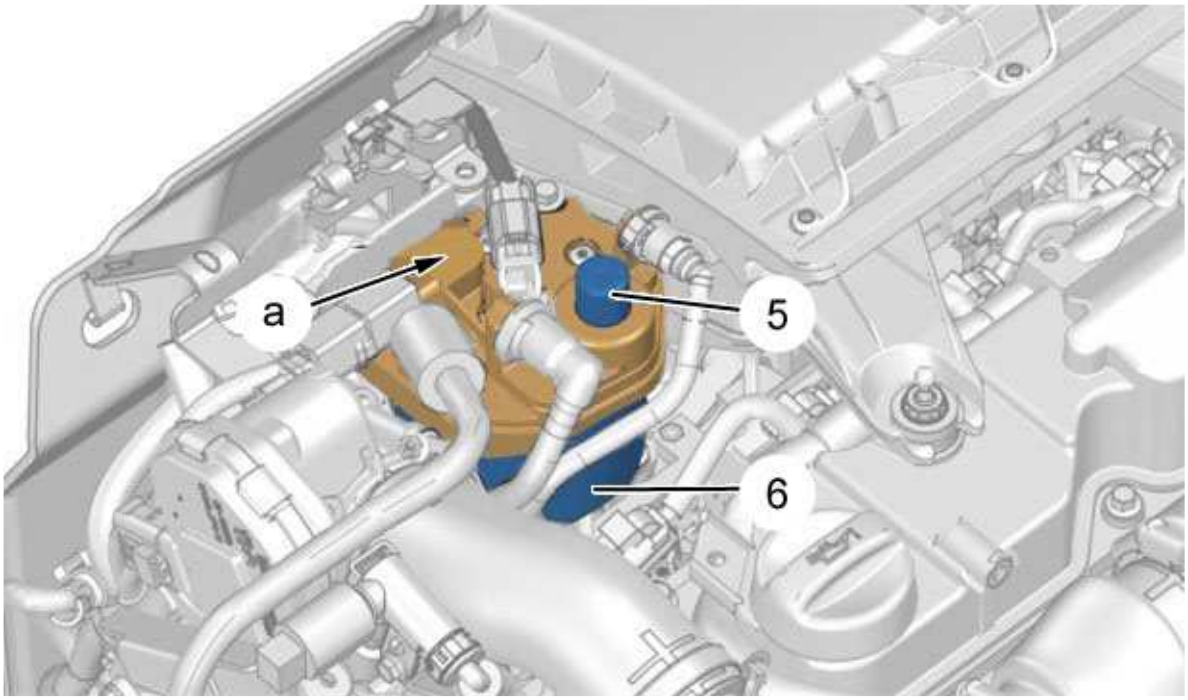

b1hb18md

(5) Manual priming pump.

(6) Fuel filter body.

"a" Fuel heater (Fuel heating function incorporated in the fuel filter housing).

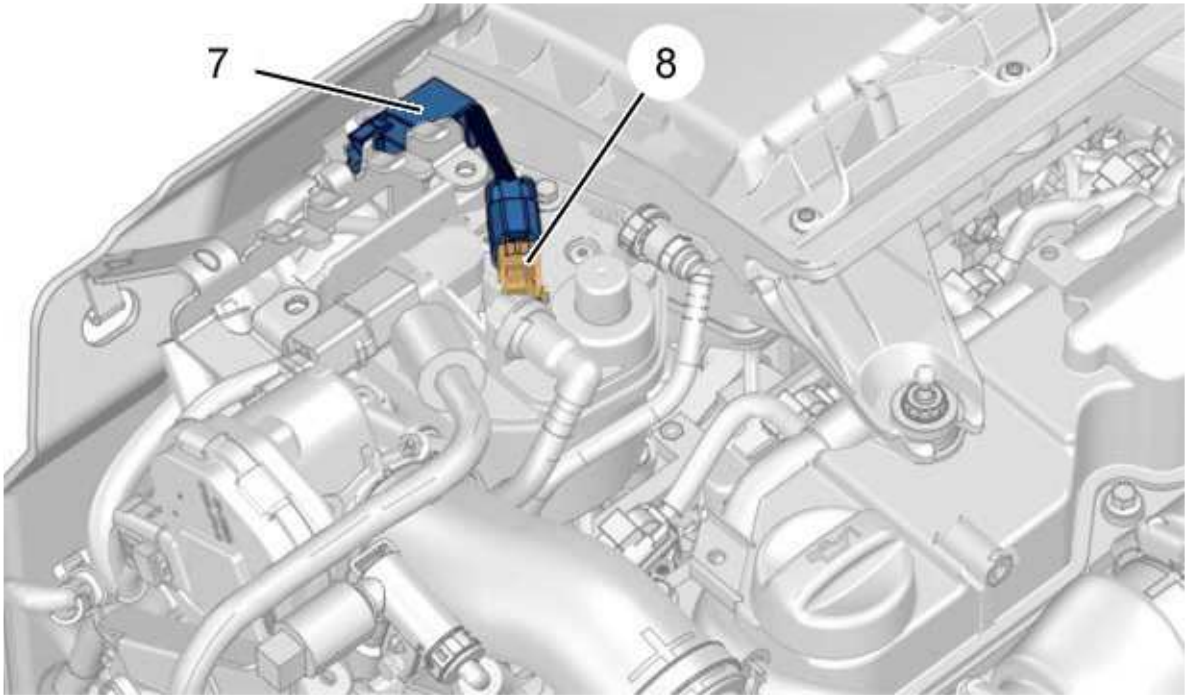

b1hb18od

(7) Conditioner/Water in diesel sensor (*).

(8) Bleeding the fuel filter (Integral water-in-diesel-fuel sensor) (*).

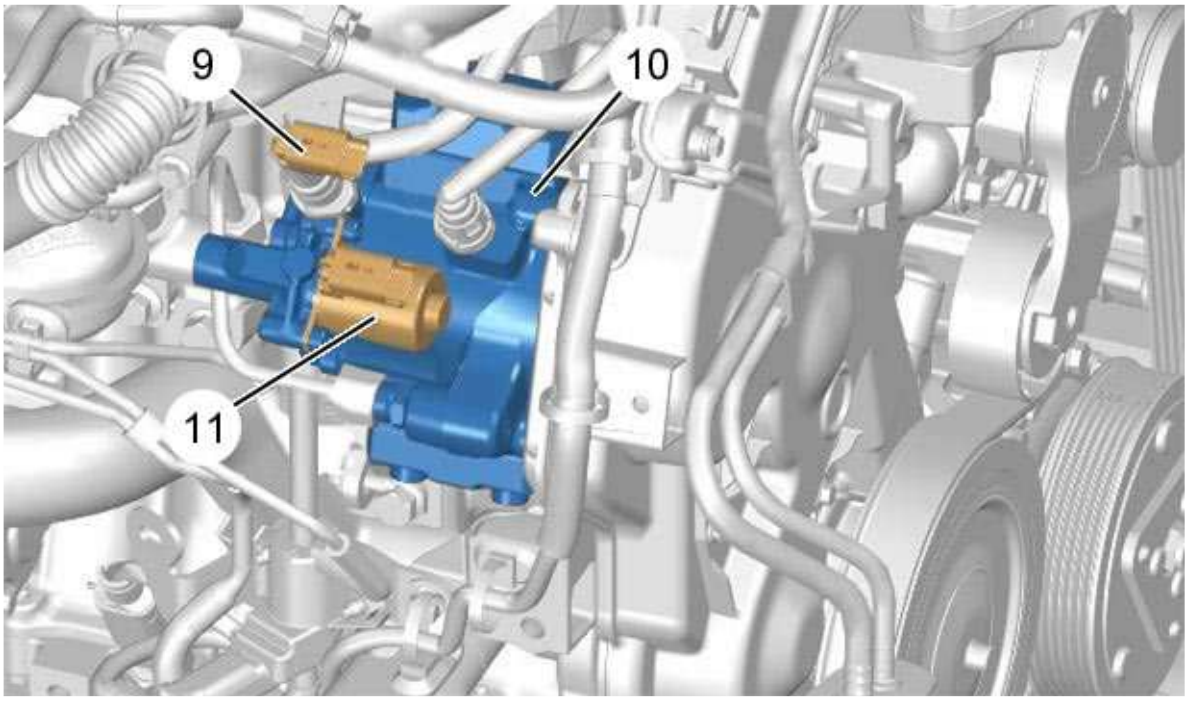

b1hb18pd

(9) Fuel temperature sensor.

(10) Fuel high pressure injection pump.

(11) Fuel flow regulator.

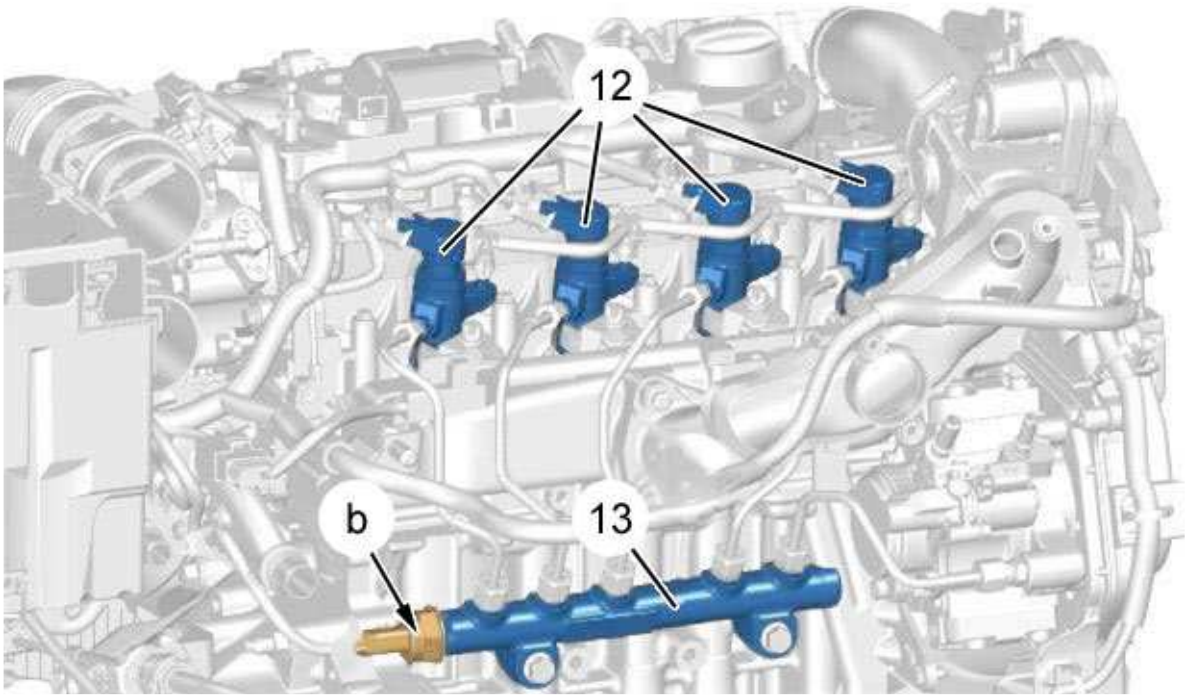

b1hb18qd

(12) Diesel injectors (1, 2, 3, 4).

(13) Fuel high pressure common injection rail .

"b" High pressure fuel sensor .

DESCRIPTION - OPERATION : FUEL FILTER

1 - DESCRIPTION



d4ea0god

(1) Fuel filter .

"a" Intake of fuel from the tank .

"b" Manual priming pump .

"c" Fuel filter outlet (Diesel fuel return to tank) .

"d" Water decanting outlet .

"e" Fuel filter outlet to the high pressure fuel pump .

2 - ROLE

Role of the fuel filter :

- To filter the fuel
- To decant the water
- To heat the fuel

NOTE : Fuel heater function incorporated in the fuel filter

3 - OPERATION

The fuel enters the fuel filter .

The fuel is filtered by filtering element .

The water contained in the fuel is decanted and stored in the water collector of the fuel filter .

4 - ELECTRICAL SPECIFICATIONS

Not applicable .

5 - INITIALISATION / INITIALISATION

Not applicable .

DESCRIPTION - OPERATION : FUEL HIGH PRESSURE COMMON INJECTION RAIL

1 - DESCRIPTION

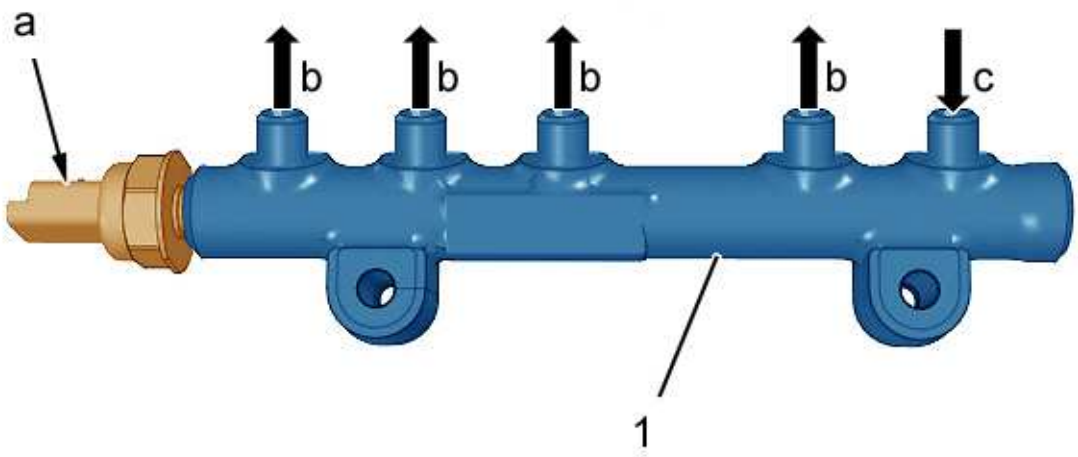

b1ha0cdd

(1) Fuel high pressure common injection rail .

"a" Fuel high pressure sensor .

"b" Fuel outlets to the diesel injectors .

"c" Fuel inlet coming from the high pressure pump .

2 - ROLE

Role of the high pressure fuel common injection rail :

- To store the amount of fuel required by the engine regardless of the operating phase
- To damp the pulses created by injections
- To link the components of the fuel high pressure circuit

Components connected to the fuel high pressure common injection rail :

- High pressure fuel supply pipe
- Diesel injector supply pipes
- Fuel high pressure sensor

3 - OPERATION

The fuel high pressure common injection rail is supplied at "c" by the fuel high pressure pump, then it redirects the diesel fuel to the diesel injectors at "b" .

4 - DATA

Continuous maximum pressure	Peak maximum pressure	Accidental pressure	Unit
1650	1850	2500	Bar

5 - PROGRAMMING/INITIALISATION

Not applicable .

DESCRIPTION - FUNCTION : TURBOCHARGER AIR COOLER

1 - DESCRIPTION

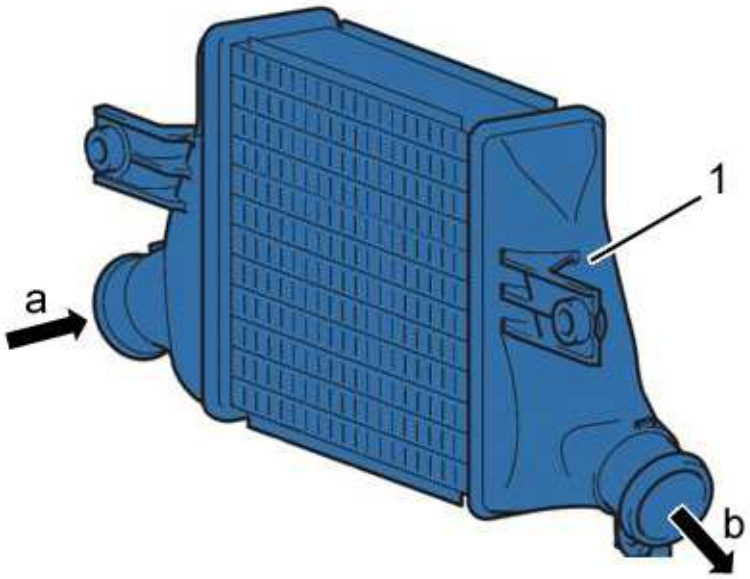

d4ea5rbd

(1) Turbocharger air cooler.

"a" Turbocharger air inlet.

"b" Turbocharger air outlet.

2 - ROLE

The turbocharger air cooler cools the air entering the cylinders, to increase the density of air in the cylinders.

Due to the increase of the air density, the motor's performances increase.

3 - FUNCTION

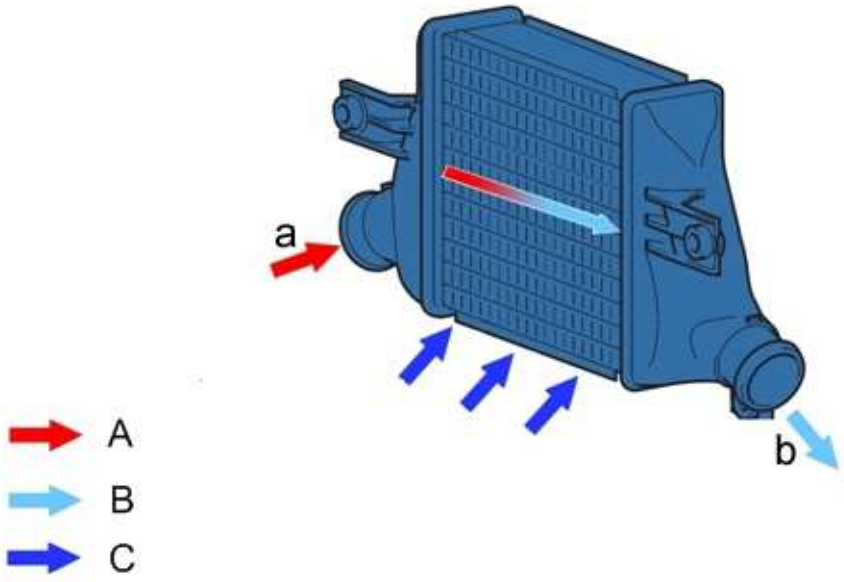

d4ea5rcd

"A" Hot air.

"B" Cooled air.

"C" Exterior air .

"a" Turbocharger air inlet.

"b" Turbocharger air outlet.

The walls of the turbocharger air cooler are cooled by contact with the outside air coming from the front of the vehicle.

The turbocharged air is cooled by being in contact with the walls of the turbocharger air cooler.

4 - ELECTRICAL FEATURES

Not applicable.

5 - PROGRAMMING/INITIALISATION

Not applicable.

DESCRIPTION - FUNCTION : CATALYTIC CONVERTER

1 - DESCRIPTION

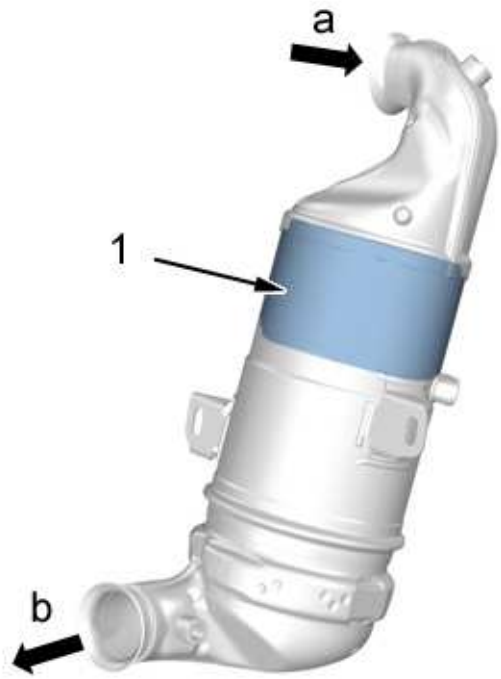

b1ja00pd

(1) catalytic converter .

"a" Exhaust gas inlet .

"b" Exhaust gas outlet .

make : FAURECIA .

Composition of the cat converter :

- A stainless steel casing
- A thermic insulator
- A ceramic honeycomb core impregnated with precious metals

2 - ROLE

The purpose of the 2-way catalytic converter is to transform, by oxidation, the carbon monoxide (CO) and the unburnt hydrocarbons (HC) into water (H2O) and carbon dioxide (CO2) .

The second role of the catalytic converter is to permit an increase in the temperature of the exhaust gas, by post-combustion of the unburnt hydrocarbons (HC) resulting from the post-injection .

3 - FUNCTION

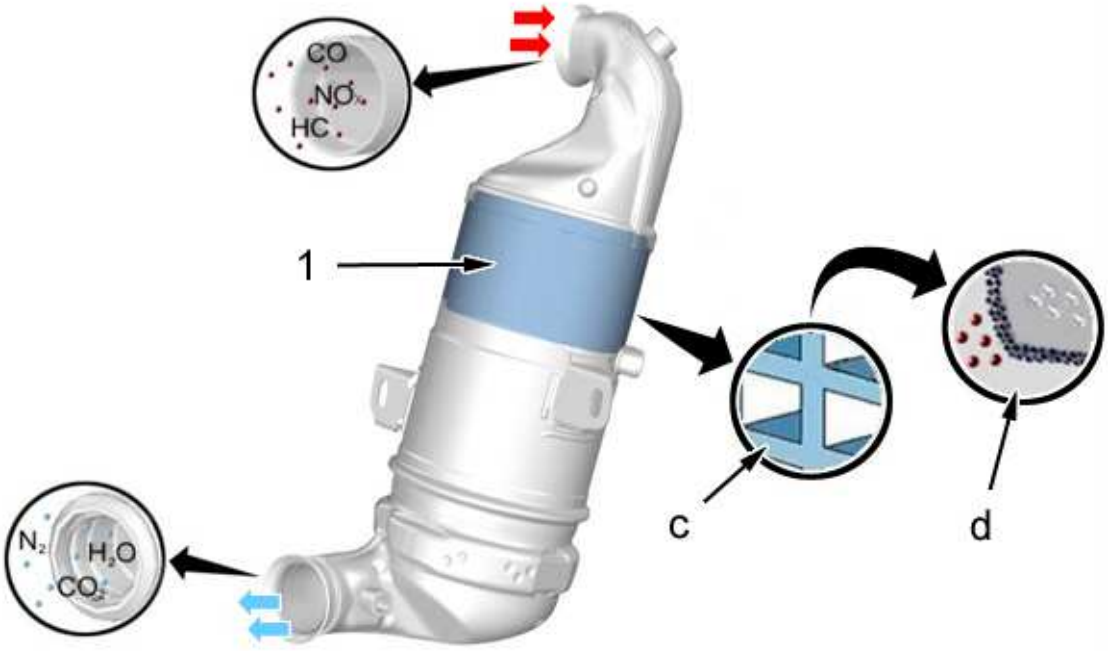

b1ja00qd

(1) catalytic converter .

"c" honeycomb ceramic block .

"d" Precious metals .

The carbon monoxide (CO) and the unburnt hydrocarbons (HC) are transformed by a chemical reaction caused by the catalytic converter .

Temperatures of the exhaust gases entering the cat converter :

- Approximately 150°C (Without regeneration)
- Approximately 350°C (With regeneration)

During the regeneration phase, the catalytic converter burns the fuel resulting from the post-injection at the catalytic converter and allows the exhaust gas to reach 450°C .

4 - DATA

Not applicable .

5 - LEARNING / INITIALISATION

Not applicable .

DESCRIPTION - FUNCTION : PARTICLE FILTER

1 - DESCRIPTION

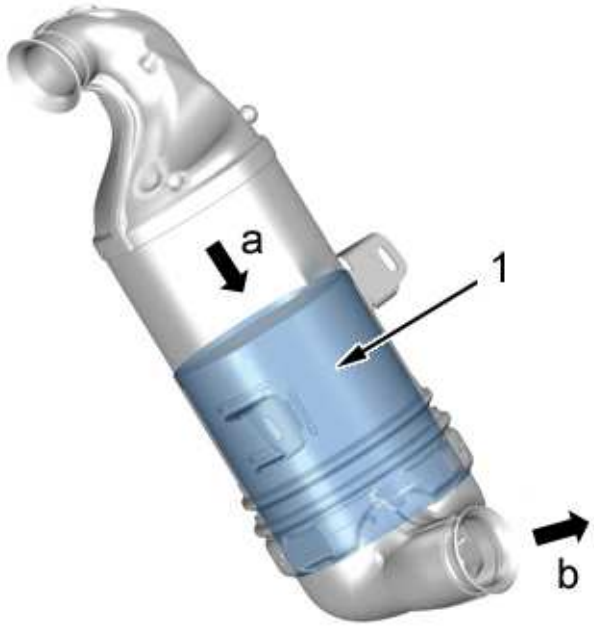

b1ja00nd

(1) Particle filter .

"a" Exhaust gas inlet (after the catalytic converter) .

"b" Exhaust gas outlet .

make : FAURECIA .

The particle filter is a porous structure of silicon carbide including channels arranged so as to force the exhaust gases to pass through the walls .

Components retained in the particle filter :

- Carbon particles
- Cerine
- Deposits from the engine oil and engine wear

2 - ROLE

The particle filter traps carbon particles as the exhaust gases pass through .

3 - FUNCTION

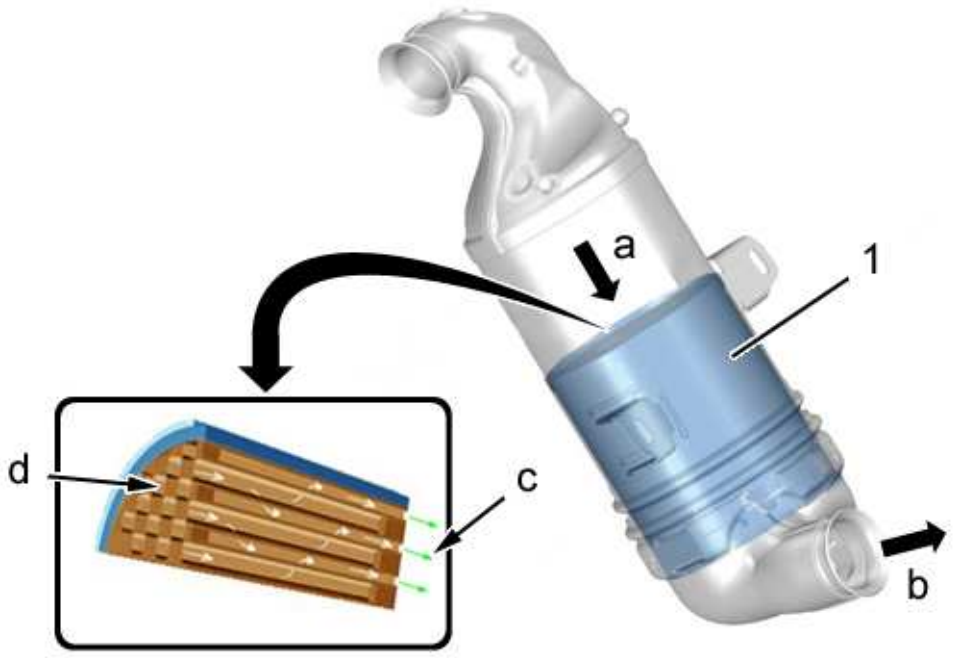

b1ja00od

"a" Exhaust gas inlet (after the catalytic converter) .

"b" Exhaust gas outlet .

"c" Outlet channels .

"d" Inlet channels .

The particle emission filter is made up of entry channels closed at their end, which forces the exhaust gas to go through the walls of the channels. These work as a filter and retain the particles .

Essentially consisting of carbon and hydrocarbons, these particles on the particle filter burn in the presence of oxygen at a temperature of 550°C (natural regeneration or with the assistance of post injection) .

The use of cerine makes it possible to lower the combustion temperature of the particles to 450°C (Temperature of the exhaust gas at the outlet from the catalytic converter during the regeneration phase) .

Cerine is an inorganic material which does not burn and is retained in the particle filter in the form of a solid deposit .

> **NOTE :** The accumulation of particles whilst the engine is operating leads to the progressive clogging up of the particle filter

4 - ELECTRICAL FEATURES

Not applicable .

5 - LEARNING / INITIALISATION

Programming is necessary if the component is replaced (Refer to the diagnostic tools documentation) .

DESCRIPTION - OPERATION : PRE-POST HEAT BOX

1 - DESCRIPTION

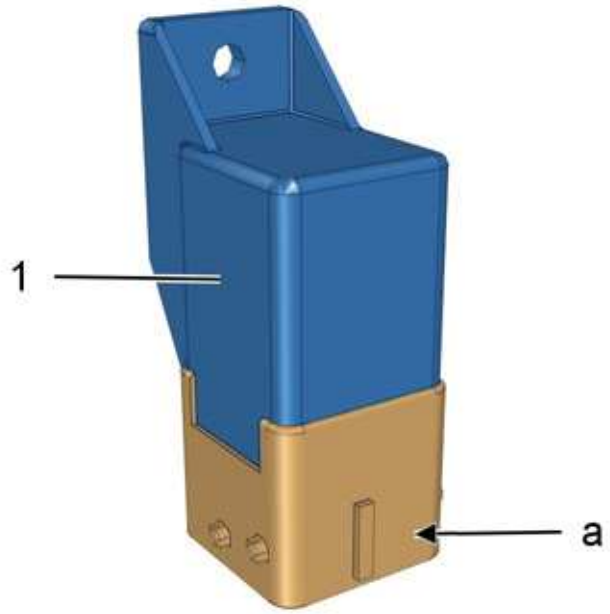

b1ha0ctd

(1) Pre-post heat box .

"a" 8-way black connector .

Supplier : MAGNA .

2 - ROLE

The pre-postheating control unit manages the functioning of the preheater plugs in the following phases :

- Starting and operating from cold
- Emission standard

3 - ELECTRICAL SPECIFICATIONS

Description	Minimum value	Nominal value	Maximum value
Voltage for functioning range	6 Volts	-	16 Volts

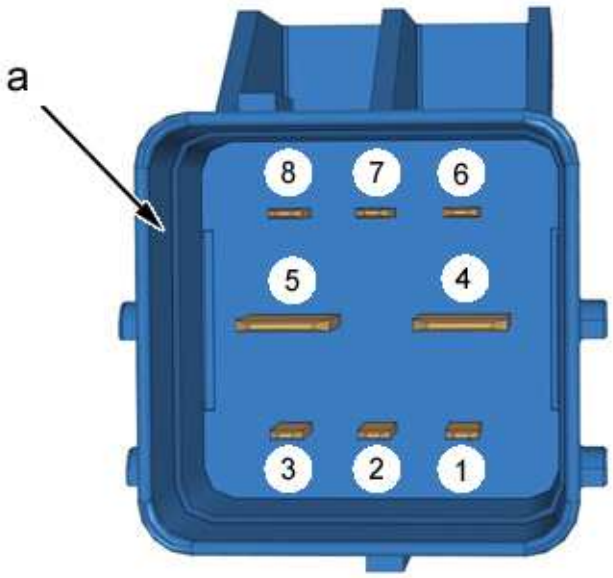

d2aa03bd

"a" 8-way black connector	
Channel number	Allocation of the tracks of the connector
1	Glow plug 3
2	Glow plug 1
3	Diagnosis
4	Battery positive
5	Earth
6	Glow plug 4
7	Glow plug 2
8	Control

4 - INITIALISATION / INITIALISATION

Not applicable .

DESCRIPTION - FUNCTION : ENGINE ECU (CONTINENTAL SID807 EVO)

1 - DESCRIPTION

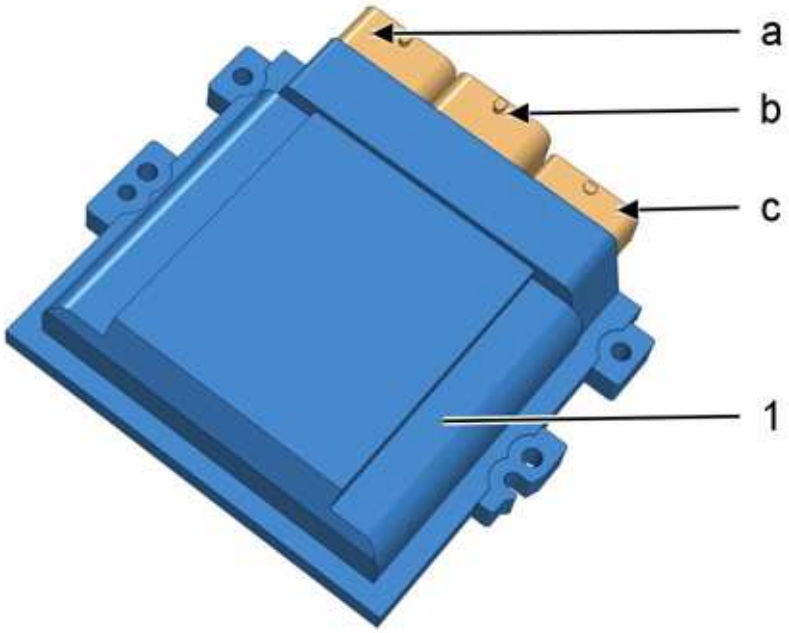

d4ea0ikd

(1) Engine ECU CONTINENTAL SID807.

"a" 53-way black connector (CH).

"b" 53-way brown (CMI) connector.

"c" 48-way grey connector (CME).

make : CONTINENTAL.

2 - ROLE

The engine management ECU manages the entire injection system.

The engine management ECU software incorporates :

- Check functionalities of injection and pollution control
- Driving improvement strategies
- Engine immobiliser function
- Emergency strategies
- Fan unit and warning lamp operating management
- The diagnostic with memorisation of failures
- The cruise control and speed limiter function (*)

(*) According to version.

The engine management ECU electrically controls the following components :

- Diesel injectors
- Fuel flow regulator
- Control electrovalve for the EGR heat exchanger by-pass (EGR)
- Variable geometry turbocharger electrovalve
- Exhaust heat saver electrovalve (RTE) (*)
- Pre and post-heating control unit
- Diesel fuel heater
- "Blow-by" heaters (*)
- Exhaust gas recycling valve

(*) According to version.

The atmospheric pressure sensor cannot be separated from the engine ECU .

The engine management ECU has 2 power stages which are able to supply the very high control current necessary for the operation of the diesel injectors.

3 - ELECTRICAL FEATURES

3 - 1 - 53-way black connector (CH)

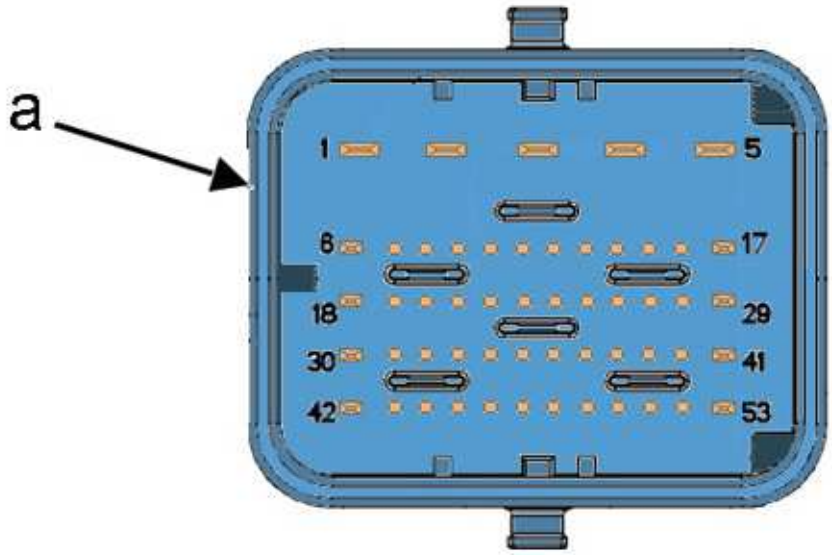

d4ea09pd

"a" 53-way black connector (CH)	
Channel No.	Allocation of channels of connector
1	Engine ECU power supply input
2	Engine ECU supply input
3	Earth
4	Earth

5	Engine ECU supply input
6	Engine ECU power supply input
7	Channel not connected
8	Diesel additive pump control (Particulate emission filter)
9	Acquisition of ignition key position (+ starting)
10	Channel not connected
11	Channel not connected
12	Cooling fan control output 2
13	Cooling fan control output 1
14	Channel not connected
15	Information ./: Extra stoplamp signal
16	Channel not connected
17	Channel not connected
18	Engine ECU power supply input
19	Acquisition of ignition key position (+APC)
20	+5V supply : Battery level sensor
21	Supply : N°2 position sensor for accelerator pedal
22	Channel not connected
23	Signal : Measures the battery level sensor voltage
24	Channel not connected
25	Information : clutch pedal position(ON/OFF)
26	Channel not connected
27	Channel not connected
28	Main relay control output
29	Starter motor relay control
30	Engine ECU power supply input
31	Channel not connected
32	Information : Cruise control lever acquisition
33	Signal : Measures current from the battery level sensor
34	Input : Accelerator pedal position sensor signal n° 2
35	Input : Accelerator pedal position sensor signal n° 1
36	Channel not connected
37	Channel not connected
38	Channel not connected
39	Channel not connected
40	B-CAN high
41 (*)	Air conditioning compressor control
42	Information : Starter motor status
43	Channel not connected
44	Earth : N°2 position sensor for accelerator pedal
45	Channel not connected
46	+5V supply : N°1 position sensor for accelerator pedal
47	Earth of the accelerator pedal position sensor n°1
48	Earth : Battery level sensor
49	Earth : Cruise control lever
50	Channel not connected
51	Channel not connected
52	B-CAN low
53	Earth
(*) According to version	

3 - 2 - 53-way brown (CMI) connector

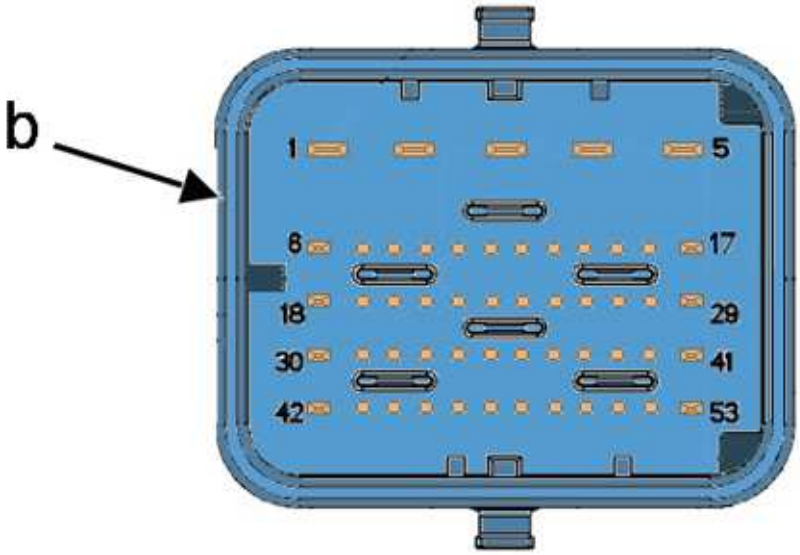

d4ea09qd

"b" 53-way brown (CMI) connector	
Channel No.	Allocation of channels of connector
1	Channel not connected
2	Proportional oxygen sensor heater control output
3	Channel not connected
4	control: Fuel pump flow regulator
5	Oil vapour heater (blow-by) and diesel heater supply
6	Control - of the EGR valve motor
7	Channel not connected
8	Channel not connected
9	Earth : Air flow meter sensor
10	Channel not connected
11	Exhaust gas recycling heat exchanger bypass control solenoid valve control output (EGR)
12	Channel not connected
13	Channel not connected
14	Channel not connected
15	Output : Pre-post heating unit control
16	Variable geometry turbocharger electrovalve control output
17	Power supply + battery of the following components : Air flow meter sensor ; Electrovalve controlling the EGR exchanger by-pass ; Oxygen sensor
18	Control + of the EGR valve motor
19	Channel not connected
20	Diesel fuel temperature sensor signal input
21	Channel not connected
22	Input : Signal from the inlet air temperature sensor

23	Exhaust gas recycling heat exchanger bypass flap position repeat sensor signal input (EGR)
24	Diesel fuel high pressure sensor signal input
25	Variable geometry turbocharger position copy sensor signal input
26	EGR valve position copy sensor signal input
27	Channel not connected
28	Inlet air mixer position repeat sensor signal
29	Power supply + battery of the following components : Fuel high pressure injection pump ; Variable geometry turbocharger control solenoid valve
30	Inlet air mixer motor - control
31	Exhaust gas recycling (E.G.R.) electrovalve earth
32	Channel not connected
33	Earth : Particle emission filter upstream exhaust gas temperature sensor
34	Earth : Inlet air pressure and temperature sensor
35	Diesel fuel high pressure sensor earth
36	Earth : Variable geometry turbocharger position repeat sensor
37	Earth : Inlet air mixer flap position sensor
38	Signal: Particle filter differential pressure sensor
39	Inlet air pressure sensor signal
40	Particle emission filter differential pressure sensor +5V supply
41	Water in diesel sensor battery + supply
42	Inlet air mixer motor + control
43	Channel not connected
44	Channel not connected
45	Earth : Diesel fuel temperature sensor
46	Particle emission filter upstream exhaust gas temperature sensor signal
47	Signal : Flow meter air temperature
48	LIN (alternator)
49	Channel not connected
50	Sensor +5V supply (diesel high pressure sensor)
51	+5V supply of the following components : Inlet air mixer flap position repeat sensor ; Exhaust gas recycling module EGR ; Variable geometry turbocharger position repeat sensor ; Position copy sensor for the EGR heat exchanger by-pass flap
52	+5V supply : Inlet air pressure and temperature sensor
53	Channel not connected
(*)According to version	

3 - 3 - 48-way grey connector (CME)



d4ea09rd

"c" 48-way grey connector (CME)	
Channel No.	Allocation of channels of connector
A1	Supply of cylinder reference sensor (+5V)
A2	Supply of the engine speed sensor (+5V)
A3	Channel not connected
A4	Lambda A - signal : Proportional oxygen sensor
B1	Channel not connected
B2	Channel not connected
B3	Channel not connected
B4	Lambda A + signal : Proportional oxygen sensor
C1	Channel not connected
C2	Engine coolant temperature sensor signal input
C3	Signal input + : Proportional oxygen sensor
C4	Signal input - : Proportional oxygen sensor
D1	Channel not connected
D2	Earth : Particle filter differential pressure sensor
D3	Channel not connected
D4	Channel not connected
E1	Channel not connected
E2	Channel not connected
E3	Channel not connected
E4	Information input : Water in diesel sensor
F1	Channel not connected
F2	Earth : EGR bypass flap position repeat sensor
F3	Channel not connected
F4	Channel not connected
G1	Cylinder reference sensor signal input
G2	Earth : Coolant temperature sensor

G3	Air flowmeter sensor signal input
G4	Channel not connected
H1	Channel not connected
H2	Earth of the engine r.p.m sensor
H3	Channel not connected
H4	Engine oil pressure switch signal input
J1	Cylinder reference sensor earth
J2	Channel not connected
J3	Channel not connected
J4	Pre-post heating diagnostic information
K1	Channel not connected
K2	Engine speed sensor signal input
K3	Channel not connected
K4	Channel not connected
L1	Control output + : Diesel injector 3
L2	Control output + : Diesel injector 2
L3	Control output + : Diesel injector 4
L4	Control output + : Diesel injector 1
M1	Control output - : Diesel injector 3
M2	Control output - : Diesel injector 2
M3	Control output - : Diesel injector 4
M4	Control output - : Diesel injector 1

4 - PROGRAMMING/INITIALISATION

The engine management ECU software is updated by downloading (ECU fitted with a flash EPROM) ; Refer to the diagnostic tools documentation : "Learning -Initialisation".

FLOW CHART : HDI DIRECT INJECTION SYSTEM CONTINENTAL SID 807 (ENGINE DV6C)

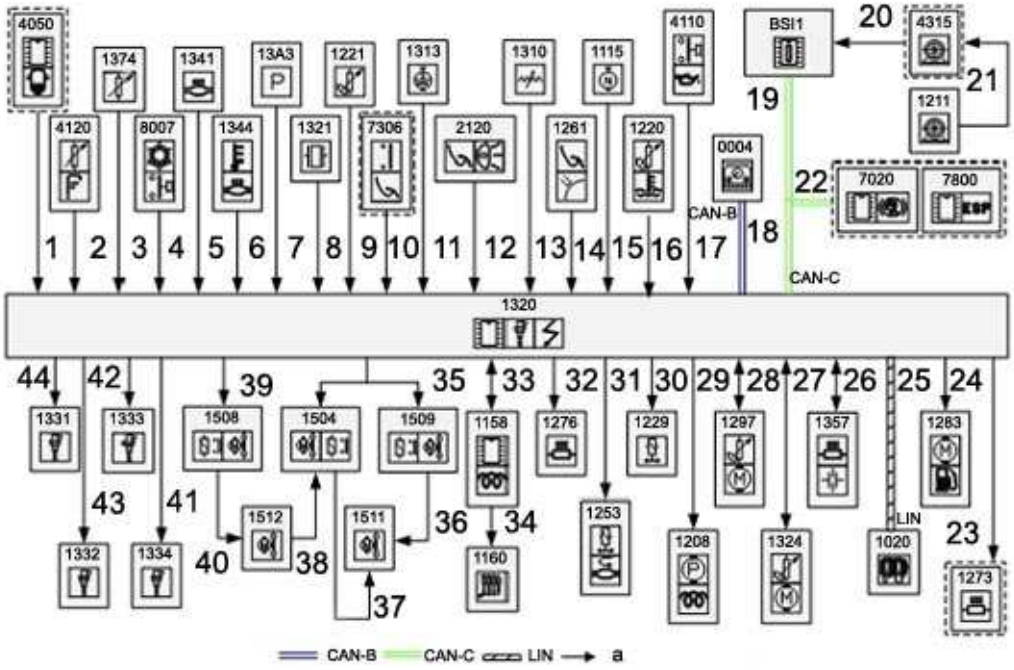

d4ea6rhd

Key : "a" Wire connection.

Components description table	
element	Designation
BSI1	Built-in systems interface
0004	Instrument panel
1020	Alternator
1115	Cylinder reference sensor
1158	Pre-post heating control unit
1160	Pre-heater plugs
1208	diesel injection pump
1211	Fuel gauge pump
1220	Coolant temperature sensor
1221	Diesel fuel thermal sensor
1229	Variable geometry turbocharger pressure regulation solenoid valve
1253	Exhaust gas recirculation (EGR) wired solenoid valve
1261	Accelerator pedal position sensor
1273 (*)	Oil breather re-heat resistor 1
1276	Diesel fuel heater
1283	Fuel additive pump
1297	Electrically-controlled exhaust gas recycling valve
13A3	Inlet air temperature and pressure sensor
1310	Air flowmeter
1313	Engine speed sensor
1320	Engine ECU

1321	Diesel high pressure sensor
1324	Electric mixer with turbocharging air cooler position repeat
1331	Diesel injector - Cylinder No. 1
1332	Diesel injector - Cylinder No. 2
1333	Diesel injector - Cylinder No. 3
1334	Diesel injector - Cylinder No. 4
1341	Particle filter differential pressure sensor
1344	Upstream exhaust gas high temperature sensor
1357	Proportional oxygen sensor
1374	Position repeat sensor for the control diaphragm of the dump valve
1504	Left-hand and right-hand fans serial supply relay
1508	Cooling fan slow speed supply relay
1509	Cooling fan fast speed supply relay
1511	Right-hand fan
1512	Left-hand fan
2120	Brake twin function switch
4050 (*)	Water in fuel sensor
4110	Engine oil pressure switch
4120	Engine oil level sensor
4315 (*)	Fuel gauge
7020 (*)	ABS ECU
7306 (*)	Cruise control safety switch (clutch)
7800 (*)	ESP ECU
8007	Air conditioning pressure switch
(*) According to version	

Description of the exchanges of information			
Connection number	signal	Transmitter / Receiver	Nature of signal
1 (*)	Information on presence of water in the diesel fuel	4050 / 1320	By wire
2	Engine oil level information	4120 / 1320	By wire
3	Dump valve position repeat information	1374 / 1320	By wire
4	Refrigerant pressure information	8007 / 1320	By wire
5	Particle emission filter clogging level information	1341 / 1320	By wire
6	Exhaust gas temperature information	1344 / 1320	By wire
7	Engine intake inlet air temperature information	13A3 / 1320	By wire
	Engine intake inlet air pressure information		
8	Information on the diesel fuel high pressure (Fuel high pressure common injection rail)	1321 / 1320	By wire
9	Diesel fuel temperature information	1221 / 1320	By wire
10 (*)	Clutch pedal pressed information	7306 / 1320	By wire
11	Engine speed and position information	1313 / 1320	By wire
12	Information on depressing the brake pedal	2120 / 1320	By wire
13	Air flow admitted by the engine information	1310 / 1320	By wire
	Inlet air temperature before turbocharger information		
14	Accelerator pedal position information	1261 / 1320	By wire
15	Camshaft position information	1115 / 1320	By wire

16	Engine coolant temperature information	1220 / 1320	By wire
17	Engine oil pressure low information	4110 / 1320	By wire
18	Fault indicator lights on	BSI1 / 0004	CAN-B
	Engine management ECU fault information		
	Particle emission filter clogging level information		
19	Cruise control or speed limiter reference values	BSI1 / 1320	CAN-C
	Quantity of fuel added information		
	Particle emission filter clogging risk information	1320 / BSI1	
	Minimum additive level reached information		
	Engine running information		
	Engine management ECU fault information		
	Request for activation of the heated rear screen to assist with regeneration of the particle emission filter		
20 (*)	Fuel gauge signals from the pump gauge module and from the secondary fuel gauge	4315 / BSI1	By wire
21 (*)	Fuel gauge signal from the pump gauge module	1211 / (4315 - BSI1)	By wire
22 (*)	Vehicle speed information	(7020 - 7800) / 1320	CAN-C
		(7020 - 7800) / BSI1	
23 (*)	Control of the heater element for the oil vapours resuction 1	1320 / 1273	By wire
24	Control of the fuel additive pump	1320 / 1283	By wire
25	Control of the alternator	1320 / 1020	LIN
	Alternator type information	1020 / 1320	
	Alternator faults information		
26	Proportional oxygen sensor heating control	1320 / 1357	By wire
	Information on mixture coming from the oxygen sensor	1357 / 1320	By wire
27	Turbocharging air cooler electric mixer control	1320 / 1324	Open cycle ratio
	Turbocharging air cooler electric mixer position information	1324 / 1320	By wire
28	Electrical control of the EGR electrovalve	1320 / 1297	Open cycle ratio
	Electric EGR solenoid valve position information	1297 / 1320	By wire
	EGR exchanger by-pass position information		
29	Control of the fuel flow regulator	1320 / 1208	Open cycle ratio
30	Control of the turbocharger pressure regulation electrovalve	1320 / 1229	Open cycle ratio
31	Exhaust gas recirculation wired solenoid valve control	1320 / 1253	Open cycle ratio
32	Control of the diesel fuel heater	1320 / 1276	By wire
33	Pre-post heating relay control	1320 / 1158	By wire
	Pre-post heat unit diagnostics information	1158 / 1320	By wire

34	Control of pre-heater plugs	1158 / 1160	By wire
35	High-speed control	1320 / 1504 1320 / 1509	By wire
36	Right-hand fan high speed supply	1509 / 1511	By wire
37	Right-hand fan low speed supply	1504 / 1511	By wire
38	Right-hand fan low speed supply	1512 / 1504	By wire
39	Low speed control High-speed control	1320 / 1508	By wire
40	Left-hand fan low speed or high speed supply	1508 / 1512	By wire
41	Fuel injector control cylinder 4	1320 / 1334	By wire
42	Fuel injector control cylinder 3	1320 / 1333	By wire
43	Fuel injector control cylinder 2	1320 / 1332	By wire
44	Fuel injector control cylinder 1	1320 / 1331	By wire
(*) According to version			

FUNCTION : PRE-HEATING AND POSTHEATING

1 - FLOW CHART

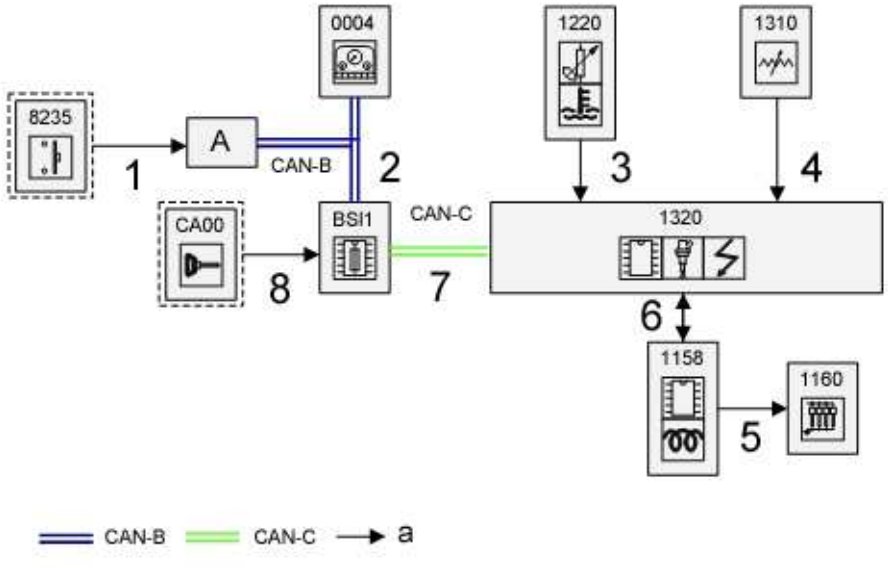

d4ea6pkd

Key : "a" Wire connection.

Components description table	
Element	Designation
A	Hands-free access control unit
BSI1	Built-in systems interface
CA00 (*)	Ignition switch
0004	Instrument panel
1158	Pre-postheating control unit
1160	Pre-heater plugs
1220	Engine coolant temperature sensor
1310	Air flow meter
1320	Engine ECU
8235 (*)	Engine starting switch
(*) According to version	

Description of the exchanges of information			
Connection number	signal	Transmitter/receiver	Nature of signal
1 (*)	Engine starting switch information	8235 / A	filament
2	Engine starting request	A / BSI1	CAN-B network
	Engine starting switch information		
	Control of displaying of the preheating warning lamp	BSI1 / 0004	
3	Engine coolant temperature information	1220 / 1320	filament

4	Inlet air temperature information	1310 / 1320	filament
5	Activation of the pre-postheating plugs	1158 / 1160	filament
6	Control of the pre-postheating unit	1320 / 1158	filament
	Information Pre-post heating unit control fault	1158 / 1320	filament
7	Request for display of the preheating warning lamp	1320 / BSI1	CAN-C network
8 (*)	Ignition key position information	CA00 / BSI1	filament
(*) According to version			

2 - PRE-HEATING

2 - 1 - Role

The preheater plugs enable the temperature to rise rapidly in the combustion chambers prior to the engine being started, when starting from cold or when the outside temperature is low.

Role of preheating :

- To facilitate starting from cold (The air is heated up to enable the injected diesel fuel to combust more easily)
- To reduce smoke emissions (The heated air reduces the incidence of unburnt gases)

NOTE : The change from preheating to postheating occurs without interruption during the starting phase

2 - 2 - Function

The engine ECU controls the pre-postheating control unit by means of an open cycle ratio.

The electrical supply of the preheater plugs is via the pre-postheating control unit, as a function of the commands from the engine ECU.

Phases of electrical supply of the preheater plugs :

- Rapid heating
- Stabilised heating

The maximum activation time for rapid heating is no more than 2 seconds.

The rapid heating phase enables the temperature of the preheater plugs to rise as rapidly as possible, to aid combustion.

During the rapid heating phase, the pre-postheating control unit is controlled by an open cycle ratio of 99%.

The stabilised heating phase comes in after the rapid heating phase, to maintain the temperature of the preheater plugs, while waiting for the engine to start.

During the stabilised phase, the pre-postheating control unit is controlled by an open cycle ratio of around 60%.

If a pre-post heating control unit failure occurs, the engine management ECU memorises a fault.

The preheating times are determined by the engine ECU as a function of the following parameters :

- Coolant temperature (Measurement done by the engine coolant temperature sensor)
- Atmospheric pressure (Measurement done by the atmospheric pressure sensor internal to the engine ECU)

2 - 3 - Activation conditions

The preheating is activated for 1,9 s if the following conditions are met :

- Engine coolant temperature lower than 15°C (Lower than 25°C at an altitude of more than 2000 m)
- Battery voltage more than 6,5 V

NOTE : Lighting of the preheating warning lamp is requested when the engine coolant temperature is lower than or equal to 10°C

3 - POST HEATING

3 - 1 - Role

Within the first few seconds of the engine starting, the temperature in the combustion chambers does not permit a combustion of sufficient quality, this causing the engine to be unstable at idle and to emit excessive pollution.

Role of postheating :

- To prolong the operation of the preheater plugs after the cold starting phase
- To guarantee the correct quality of combustion after starting
- Reducing the emissions of pollutants in the first few minutes after starting
- To stabilise the engine at idle
- To reduce blue smoke emissions

3 - 2 - Function

The engine ECU controls the pre-postheating control unit by means of an open cycle ratio.

The unit supplies the pre-heater plugs with power in accordance with the orders of the engine management ECU.

If a pre-post heating control unit failure occurs, the engine management ECU memorises a fault.

The postheating times are determined by the engine ECU as a function of the following elements :

- The temperature of the coolant fluid (measured by the engine coolant temperature sensor)
- The atmospheric pressure sensor (measured by the atmospheric pressure sensor internal to the engine ECU)

NOTE : The postheating timing can vary as a function of the inlet air temperature

3 - 3 - Activation conditions

The preheating is activated immediately the engine starts, for an engine coolant temperature as high as 50°C.

The duration of the postheating varies according to the engine speed and engine load but cannot exceed 900 seconds.

> **NOTE :** The glow plugs are only activated when the engine is operating in medium load conditions, in order to prevent the engine overheating

3 - 4 - Activation of the postheating for reduction of blue smoke at altitude

In order to limit the emission of blue smoke, especially at altitude (atmospheric pressure less than 900 mbar), the timing of the activation of the preheater plugs is defined in the base mapping, taking account of the following parameters :

- Inlet air temperature
- Engine coolant temperature
- engine torque
- The atmospheric pressure

FUNCTION : FUEL SUPPLY

1 - SCHEMATIC DIAGRAM

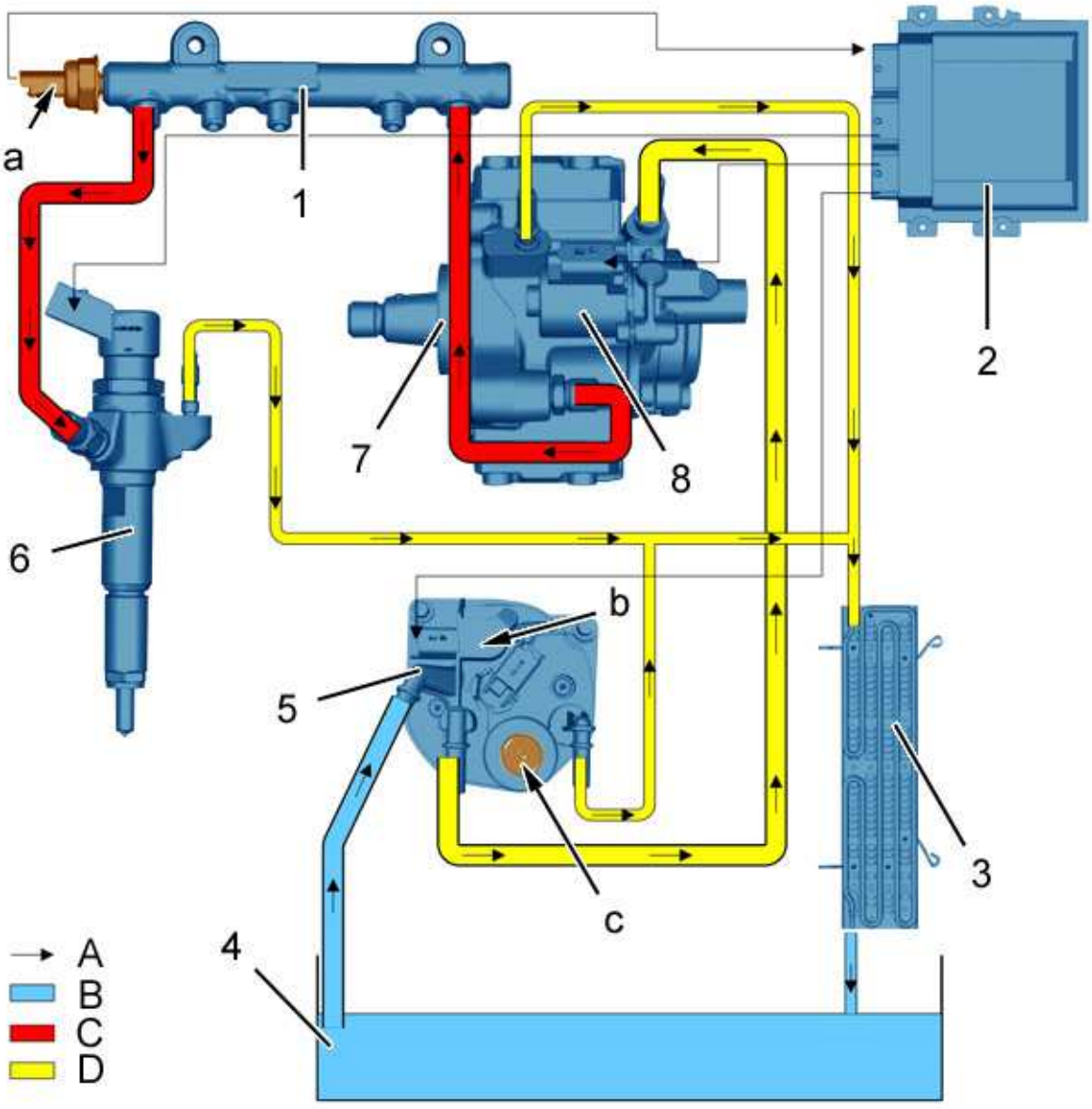

d4ea0t3p

Key :

- "A" Electrical links
- "B" Low pressure fuel circuit
- "C" High pressure fuel circuit
- "D" Heated low pressure fuel circuit

Reference	Designation	Electrical diagram correspondence
(1)	Fuel high pressure common injection rail	-
(2)	Engine ECU	1320
(3)	Fuel cooler	-

(4)	Fuel tank	-
(5)	Fuel filter	-
(6)	Diesel injector (1) ; (2) ; (3) ; (4)	(1331, 1332, 1333, 1334)
(7)	high pressure fuel pump	1208
(8)	Fuel flow regulator	1208
"a"	Fuel high pressure sensor	1321
"b"	Integral diesel fuel heater	1276
"c"	Manual fuel primer pump	-

2 - CONTROL OF THE INJECTION

The engine ECU receives and converts the demands from the driver, or from the vehicle (ABS, ESP, automatic gearbox), into information on the necessary torque that is required of the engine.

The engine ECU determines the quantity of fuel that is necessary to provide the engine torque that is required.

Depending on the quantity of fuel calculated, the engine ECU determines the following parameters :

- Fuel pressure in the fuel high pressure common injection rail
- Fuel injection time

To comply with the pollution norms, to limit the noise of combustion, and to improve the driving quality, the engine ECU determines the following parameters :

- Fuel injection advance necessary (Start of injection)
- Number of fuel injections per engine cycle
- Time of each injection of fuel during an engine cycle

3 - FUEL PRESSURE IN THE FUEL HIGH PRESSURE COMMON INJECTION RAIL

3 - 1 - General

When the engine speed and engine load are low, the engine does not require the maximum fuel injection pressure.

To reduce the injection pressure, the engine ECU commands the flow regulator to limit the supply of fuel at the high pressure pump.

The high pressure fuel sensor measures the pressure in the fuel high pressure common injection rail.

The engine ECU calculates a control current for the flow regulator, as a function of the pressure measured by the fuel high pressure sensor.

3 - 2 - Specificities

The high pressure pump provides a maximum injection pressure of 1600 bars, in the fuel high pressure common injection rail (The pressure is regulated by a mechanical valve internal to the pump).

The injection pressure required is calculated as a function of the following parameters :

- Intake air temperature

- Engine speed
- Engine load
- Coolant temperature
- Diesel fuel temperature

NOTE : The minimum fuel injection pressure to enable engine starting is 150 bars

The engine ECU may request a temporary increase in the engine power. In this case the maximum injection pressure changes to 1650 bars in stages of 40 seconds, with pauses of 40 seconds between 2 activations for a total of 20 hours cumulative.

The engine ECU requests the temporary increase in power when there is a heavy acceleration in engine speed in the following conditions :

- Coolant temperature above 75°C
- Temperature of the air entering the engine 55°C
- Atmospheric pressure higher than 950 mbar
- Engine speed above 2500 rpm

4 - INJECTION TIME

4 - 1 - General

Fuel injection pressure being equal, a longer (or shorter) injection time allows more (or less) fuel to be injected.

When there is a large engine load need, fuel injection pressure being equal, the fuel injection time is extended to obtain the maximum engine torque.

The fuel injection time corresponds to the time during which the engine ECU commands the fuel injectors to be open.

4 - 2 - Specificities

The fuel injection time is calculated as a function of the following parameters :

- Intake air temperature
- Engine speed
- Engine load
- Coolant temperature
- Fuel pressure in the fuel high pressure common injection rail

5 - COMPENSATION FOR FUEL INJECTOR DRIFT

The repeated injection cycles cause a wearing of the fuel injectors which creates a drift in the flow of fuel injected.

The drift in the flow of fuel injected causes combustion noise and an increase in pollution.

The engine ECU compensates for the drift in the flow of fuel injected by applying a correction of the injection time, making this either longer or shorter.

Actions by the engine ECU to determine the correction to be applied to the injection time :

- Stabilising the injection pressure at different points (400, 800 and 1200 bars) during a "driver pedal release"
- Controlling the fuel injectors one by one, progressively increasing the injection time
- Recording the flywheel acceleration generated by the fuel injection

  NOTE : When the flywheel acceleration corresponds to a fuel injection flow of 1 mg/stroke, the engine ECU records in its memory the injection time necessary to obtain this flow

The engine ECU detects the fuel injector drift when the following conditions are met :

- No pressing of the accelerator pedal
- No pressing of the clutch or brake pedal
- Vehicle speed higher than 40 km/h
- Engine speed between 1400 and 2500 rpm
- Coolant temperature between 70°C and 100°C
- Air temperature higher than - 5°C
- Fuel temperature between 20°C and 90°C

6 - ADAPTATION OF THE MIXTURE

The engine ECU can reset the engine mixture to compensate for the injector and air flow sensor drifts.

The mixture adaptation operates in 2 stages :

- The programming of the nominal mixture
- The correction of the drift in the mixture

6 - 1 - Programming the nominal mixture

The engine ECU programmes the nominal mixture during the first 300 kilometres of the life of the vehicle.

When the driver releases the accelerator pedal, the engine ECU compares the values from the oxygen sensor with those from the air flow sensor to calculate the actual flow of fuel injected.

The fuel flow calculated makes it possible to obtain a torque value which is compared with the actual torque value, the difference between these two values being memorised in the engine ECU mapping.

The operation is repeated at different (engine speed/load) operating points to produce a complete mapping that gives a nominal mixture value on a new engine.

6 - 2 - Correction of the drift in the mixture

After the first 300 kilometres, the engine ECU records the mixture measured in a mixture drift mapping.

The engine ECU compares the nominal mixture mapping with the mixture drift mapping and defines a new torque value to correct the mixture drift.

The corrected torque value is directly taken into account in the mappings for the exhaust gas recycling, the air flow and the turbo pressure.

6 - 3 - Conditions for activation of the measuring for mixture adaptation

The strategy for adaptation of the mixture is activated depending on the following conditions :

- Engine coolant temperature at 70 °C
- Air temperature : 13 °C
- Atmospheric pressure higher than 940 mbar
- No pressing of the accelerator pedal
- No pressing of the brakes or clutch
- Stable pressure in the fuel injection rail
- Stable turbo pressure
- Stable inlet air flow
- Stable oxygen sensor information
- Engine positioned within a range of engine speed / Torque which is specific and indicated

NOTE : The mixture adaptation is not carried out at idle

7 - FUEL INJECTION FLOW

7 - 1 - General

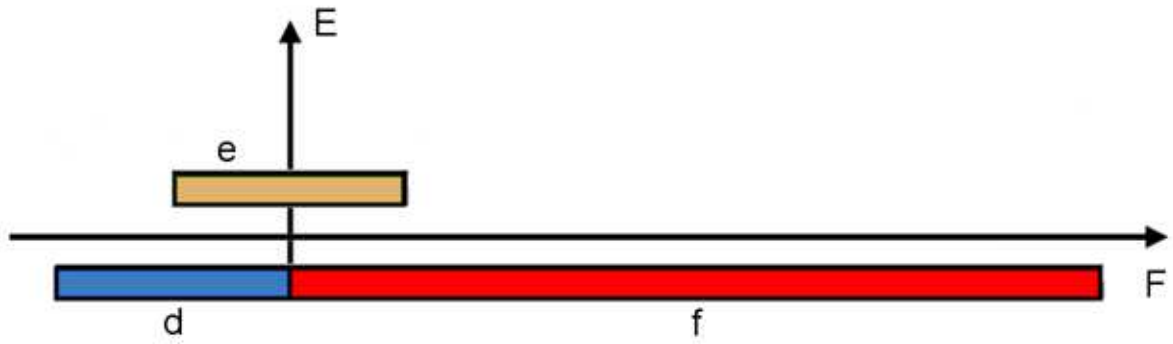

d4ea0t6d

"E" Top dead centre.

"F" Crankshaft angle.

The fuel injected into the combustion chamber requires time to ignite.

The engine ECU injects the fuel before top dead centre to compensate for the delay in the fuel igniting.

The moment of injection provides for an optimum combustion with maximum pressure in the cylinder, to push on the piston as it descends.

The moment of injection is determined by the crankshaft angle relative to top dead centre.

There is one moment of injection for each injection of fuel in an engine cycle :

- The fuel pre-injections are positioned in the range "d"
- The main fuel injections are positioned in the range "e"
- The fuel post-injections are positioned in the range "f"

7 - 2 - Specificities

The engine ECU determines the moment of injection as a function of the following parameters :

- Information from the camshaft sensor
- Information from the engine speed sensor
- Engine load
- Air temperature
- Engine coolant temperature
- Vehicle speed
- Atmospheric pressure

In the engine starting phase : The engine ECU increases the injection advance so as to facilitate engine starting and reduce pollutant emissions.

During the particle emission filter regeneration phase :

- The engine ECU retards the injection
- The combustion terminates in the catalytic converter, which increases the temperature of the exhaust gases

8 - NUMBER OF FUEL INJECTIONS PER ENGINE CYCLE

8 - 1 - General

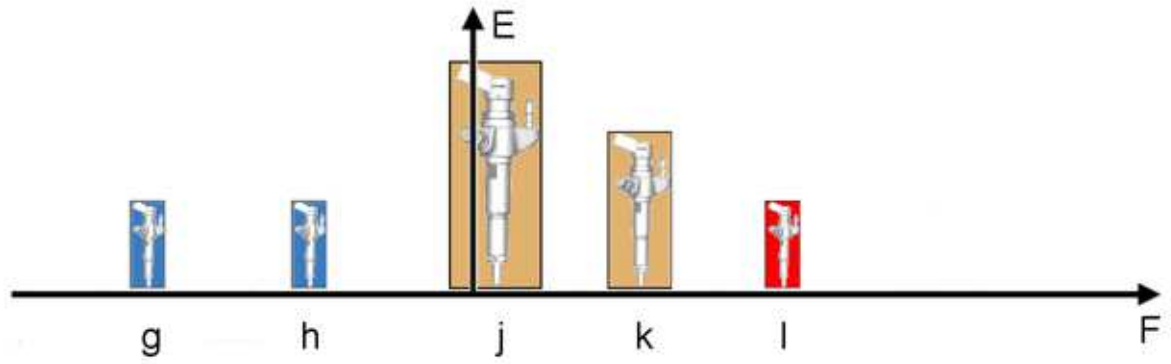

d4ea0t9d

"E" Top dead centre.

"F" Crankshaft angle.

"g" First pre-injection.

"h" Second pre-injection.

"j" First main injection.

"k" Second main injection ("split" injection).

"l" post-injection.

Pre-injections inject a small quantity of fuel prior to the main injection, in order to increase the temperature in the combustion chamber.

The rise in temperature in the combustion chamber enables the diesel fuel to ignite sooner and more rapidly than in a main injection (reduction in the fuel combustion noise).

The majority of the fuel quantity is injected in the main injection; the combustion produced by the diesel fuel igniting generates the movement of the piston (Creation of torque).

The main injection can be separated, giving rise to a second main injection called "Split injection".

"Split injection" generates an increase in the temperature of the exhaust gases, which reduces the emissions of nitrous oxide (NOx).

The post-injection, used on vehicles that have a particle filter, consists of injecting a quantity of fuel

during the exhaust phase in order to increase the temperature of the exhaust gases.

The increase in the temperature of the exhaust gases enables the destruction of the particulates that are retained in the particle filter.

> **NOTE :** The quantity of fuel needed for one engine cycle is spread over the 3 types of injection

8 - 2 - Specificities

The engine ECU can order up to 5 injections per engine cycle :

- 3 injections ; Engine idling (2 pre-injections ; 1 main injection)
- 1 ; 2 ; 3 or 4 injections ; Engine under load (1 or 2 pre-injections ; 1 or 2 main injections ("Split", depending on engine speed)
- 5 injections during regeneration of the particle filter (2 pre-injections ; 1 main injection ; 1 or 2 post-injections)

The "split injection" comes in when the vehicle speed is between 75 km/h and 125 km/h.

> **NOTE :** "Split" injection cannot be activated during a regeneration of the particle filter

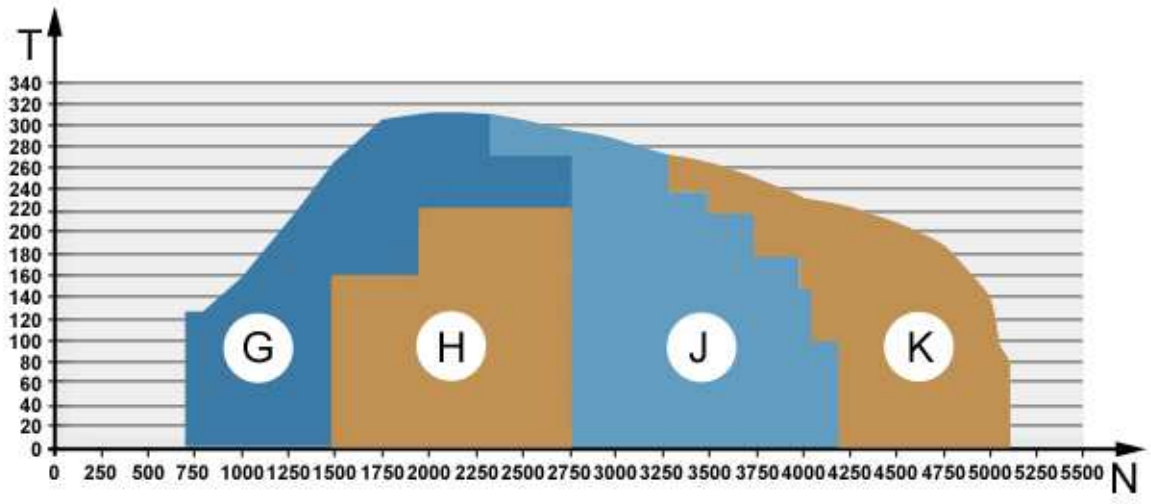

d4ea0tcd

Example of the changes in the number of injections per cycle.

"T" Engine torque.

"N" Engine speed.

"G" Zone with 2 pre-injections and 1 main injection.

"H" Zones with 2 pre-injections and 2 main injections ("split" injection).

"J" Zone with 1 pre-injection and 1 main injection.

"K" Zone with 1 main injection only.

As the engine speed increases, so the duration of each engine cycle diminishes :

- The engine ECU no longer has the time to order multiple injections
- The number of injections per cycle diminishes

9 - OIL INGESTION STRATEGY

A risk of autocombustion exists when oil from the lubrication circuit in a diesel engine happens to penetrate into the combustion chamber in a sufficient quantity.

Such autocombustions are outside the control of the engine ECU, and can rapidly destroy the engine.

To prevent destruction of the engine, the engine ECU uses an oil ingestion strategy.

9 - 1 - Detection of engine racing (Oil ingestion)

The engine ECU detects oil ingestion in the following instances :

- Engine speed higher than 6500 rpm for at least 2 seconds
- Turbocharging pressure greater than 2600 mbar absolute when the accelerator is released
- Richness more than 0,5 when the accelerator pedal is released

9 - 2 - Engine stopping following racing

The engine ECU makes the engine cut out as soon as an oil ingestion is detected.

Actions by the engine ECU to make the engine cut out :

- Forcing the closure of the inlet air mixer
- Forcing the closure of the EGR valve
- Opening of the variable geometry turbocharger
- Prohibiting the injection of fuel

Once the engine has cut out, the engine ECU authorises restarting in reduced flow downgrade mode only, limiting the engine speed to 1750 rpm. An operation using the diagnostic tool is necessary in order to restore normal operation.

10 - REDUCED FLOW

The engine ECU can apply 4 injection flow limitation strategies in the event of a fault in a component of the injection system or in the accelerator pedal sensor.

The flow limitation strategies authorise operation of the engine but with limited engine speed and engine torque, the severity of the limitation depending on the fault.

When an accelerator pedal sensor fault is detected, the idle speed changes to 1300 rpm.

FUNCTION : FUEL ADDITIVE FUNCTION

1 - SCHEMATIC DIAGRAM

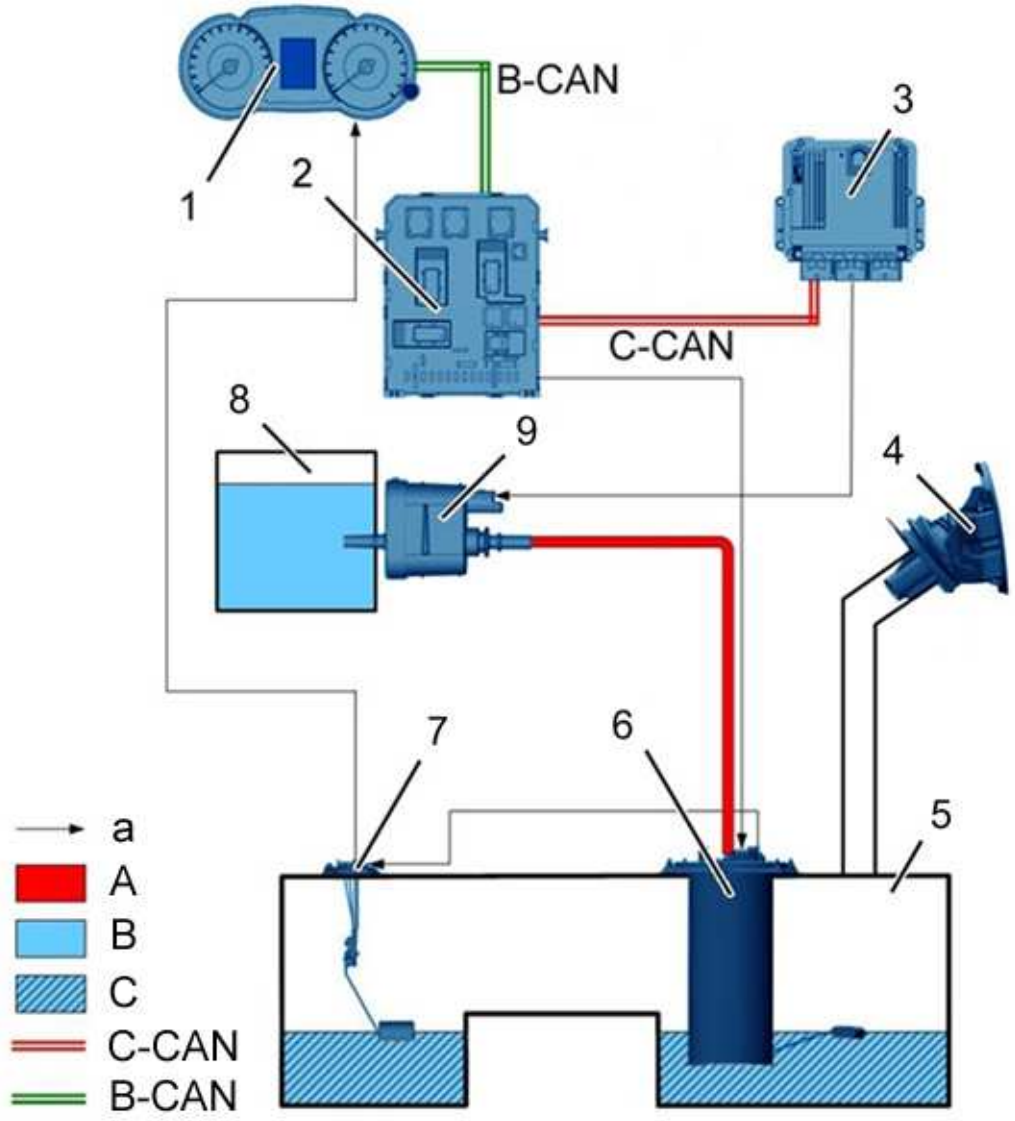

d4ea6w7p

Key :

- "a" Electrical links
- "A" Additive under pressure
- "B" additive
- "C" Diesel

Reference	Designation	Electrical diagram correspondence
1	Instrument panel	0004
2	Built-in systems interface	BSI1
3	Engine ECU	1320

4	Fuel filler cap	-
5	Fuel tank	-
6	Fuel tank unit	1211
7	Fuel gauge	4315
8	Additive tank	
9	Fuel additive pump	1283

2 - ROLE

The fuel additive function keeps the particle filter operational by aiding the combustion of the captured particles, performing the following actions :

- Lowering the temperature of combustion of the particles to 450°C (instead of 550°C)
- Impregnating the particles that are gathering in the combustion chamber
- Spreading the combustion of the particles

3 - PERFORMANCE OF THE FUEL ADDITIVE FUNCTION

3 - 1 - Engine ECU

The engine ECU receives the information on the amount of fuel put in the vehicle, via the BSI, from the following components :

- Fuel gauge
- Wheel speed sensors

Depending on the quantity of fuel put in, the engine ECU takes the following actions :

- To determine the quantity of additive to be injected into the fuel tank
- To control the fuel additive pump

The engine management ECU sends a request for an addition of additive of a total volume broken down into requests for one or more volumes of between 1600 and 1632 mm³ to the fuel additive pump, via the intermediary of the built-in systems interface.

The engine ECU records in memory the weight of additive that is accumulated in the particle filter.

The engine ECU authorises or prohibits the applying of additive, as a function of the following parameters :

- State of the additive pump
- Level of additive remaining
- State of clogging of the particle filter
- Fuel gauge state

  NOTE : The engine ECU sends an alert on the risk of clogging of the particle filter and on the level of additive being insufficient, as a function of the quantity of additive injected and of the weight of additive accumulated in the particle filter

3 - 2 - Fuel additive pump

The fuel additive pump injects the precise quantity of additive under pressure, as requested by the

engine ECU, into the fuel tank.

> **NOTE :** The injection pressure of the additive is fixed by an injection valve calibrated to 0,230 ± 0,05 bar (Relative pressure)

The additive pump sends to the engine ECU, via the BSI, the following information :

- Status of additive system (diagnosis of the additive system)
- Quantity of additive actually added

3 - 3 - Built-in systems interface (BSI1)

Role of the BSI :

- To memorise faults and to command alerts sent to the instrument panel
- To receive and transmit to the engine ECU information on the quantity of fuel put in
- To serve as a bridge between the engine ECU and the fuel additive pump

When the vehicle is stationary (wheel speed sensor information) and the ignition switched off ; The BSI1 memorises the level of fuel present in the tank.

When the ignition is switched on again and the vehicle starts moving, the BSI1 acquires and compares the level of fuel with the latest value memorised. If the new value is higher, the BSI1 transmits to the engine ECU the quantity of fuel that has been added.

The BSI receives the following information from the engine ECU :

- Minimum fuel additive level warning
- Risk of particle filter clogging

The BSI sends the following information from the engine ECU :

- State of the additive pump
- Fuel gauge state

4 - CONDITIONS FOR USE OF THE FUEL ADDITIVE FUNCTION

The engine controlled ECU controls the fuel additive pump when the following conditions met :

- Vehicle speed above 40 km/h or last fuel addition over 300 seconds
- Internal combustion engine running
- Starter switch in the ignition positive position
- Adequate additive level

> **NOTE :** When one of the necessary parameters disappears during the additive injection, the operation continues until the end

5 - LEARNING / INITIALISATION

The fuel additive function is subject to personalised maintenance.

FUNCTION : AIR SUPPLY

1 - SCHEMATIC DIAGRAM

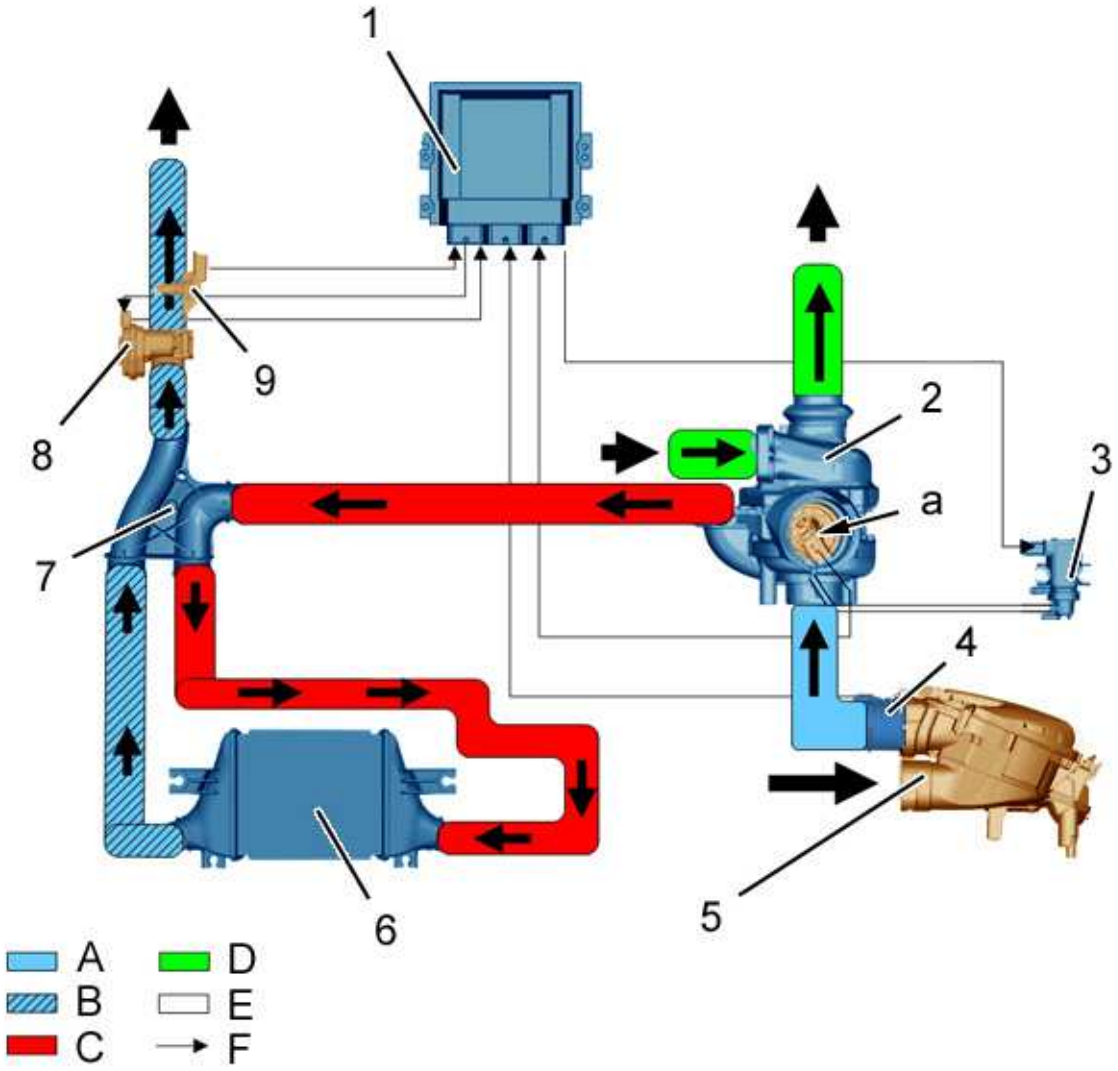

b1ha0kup

Key :

- "A" Fresh air
- "B" Cooled compressed air
- "C" Hot compressed air
- "D" Exhaust gas
- "E" Control vacuum
- "F" Electrical links

Referenc	Designation	Electrical diagram correspondence

"a"	Turbocharger blades control diaphragm (With position copy sensor)	1374
(1)	Engine ECU	1320
(2)	Variable geometry turbocharger	-
(3)	Proportional electrovalve controlling the variable resistance turbocharger	1229
(4)	Air flowmeter by mass	1310
(5)	Air filter unit	-
(6)	Turbocharger air cooler	-
(7)	Intermediate inlet union	-
(8)	Air metering valve	1324
(9)	Inlet air pressure and temperature sensor	13A3

2 - MANAGEMENT OF THE AIR SUPPLY

The air supply management is in two parts :

- Regulation of the inlet air flow
- Regulation of the turbo air pressure

2 - 1 - Regulation of the inlet air flow

To regulate the air flow, the engine ECU has to have the following types of data for different points on the EGR and air circuits :

- The inlet air pressure
- The inlet air temperature
- The air flow mass

The engine ECU receives the following types of information :

- The positions of the inlet air metering unit and the exhaust gas recycling (EGR) valve
- The air flow mass and temperature values as provided by the air flowmeter and the pressure and temperature values as provided by the inlet air pressure and temperature sensor

As well as the values measured by the air flowmeter and the inlet air pressure and temperature sensor, the engine ECU estimates values for air pressure, flow and temperature at strategic points in the engine cycle.

The association of the values measured, the values estimated and the positions of the EGR valve and inlet air metering unit enables the engine ECU to know precisely the flow of air entering the engine according to the positions of the EGR valve and inlet air metering unit.

The engine ECU adapts the mass of air entering the engine to the needs relating to the different life phases (idling, full load, EGR recycling, etc.).

The air flow entering the engine is regulated through control of the following components :

- Air intake mixer
- Exhaust gas recycling valve (EGR)

2 - 2 - Turbo air pressure

At an equal temperature, the mass of air entering the cylinder increases with the turbo air pressure.

The turbo air pressure delivered by the turbocharger increases with the engine speed.

The engine ECU has to adapt the quantity of air entering the cylinders to the requirements of the user.

> **NOTE :** The maximum turbo pressure is 2600 mbar absolute

The engine ECU is able to manage the variable geometry according to 2 modes of operation :

- Piloted mode
- Regulated mode

Piloted mode : To obtain the turbo pressure required, the engine ECU operates the variable geometry control electrovalve in accordance with a variable geometry position reference value.

Regulated mode : The engine ECU commands the variable geometry electrovalve so that it regulates the turbo pressure as a function of an absolute reference for air pressure.

> **NOTE :** In the event of a turbo air pressure sensor fault, the turbocharger management goes into piloted mode and a regulation of the fuel flow may be applied

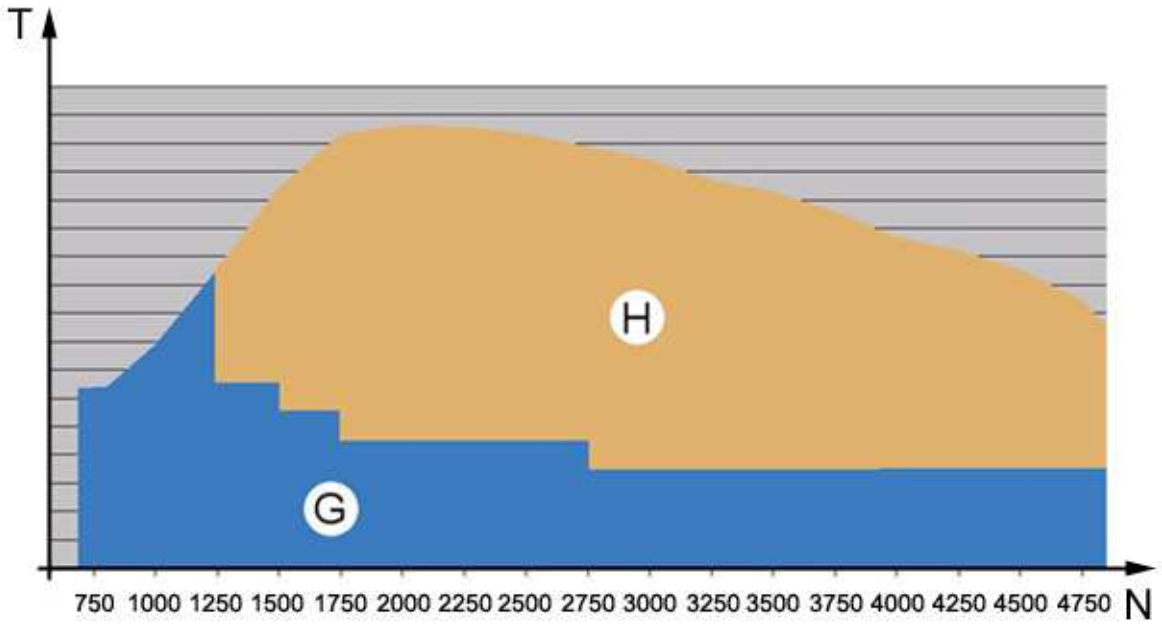

b1ha0icd

"G" Zone : Regulated.

"H" Zone : piloted.

"T" engine torque.

"N" Engine speed.

The turbo air pressure reference is calculated from the following parameters :

- Engine speed
- Engine load
- Engine coolant temperature
- Inlet air temperature

The position of the turbocharger in programmed in two stages :

- Programming of the upper limit for foot-off provided the coolant temperature is lower than 60°C, and for full load
- The lower limit is programmed at the Power Latch

FUNCTION : PARTICULATE FILTER REGENERATION

1 - GENERAL PRINCIPAL

The purpose of the regeneration is to eliminate the particulates retained on the walls of the particle filter.

Regeneration consists of periodically burning off the particles accumulated in the particle filter.

Regeneration may occur naturally if the temperature of the exhaust gases is sufficient.

Regeneration may be triggered by the engine management ECU if the temperature of the exhaust gas is too low and the particle filter is clogged.

The engine management ECU artificially increases the temperature of the exhaust gas by post injection : This is the "regeneration assistance" phase.

> **NOTE :** The driving conditions directly affect the temperature of the exhaust gases and consequently the temperature inside the particle filter

The engine management ECU manages the following elements continuously :

- The condition of the filter with the function ; Monitoring of the particle filter load level
- Regeneration assistance using the function ; Regeneration assistance management

2 - FUNCTION : MONITORING OF THE PARTICLE FILTER LOAD LEVEL

Role :

- To determine the condition of the particle filter (clogging level)
- To request activation of the regeneration assistance function, when required
- To ensure the effectiveness of the regeneration assistance function

Main information used for monitoring the particle filter :

- Calculation of the weight of soot present in the particle filter
- Differential pressure (measure)
- Exhaust gas temperature (downstream of the catalytic converter)
- Inlet air flow
- Information on mixture coming from the oxygen sensor

> **NOTE :** The first two pieces of data are dependent on the particle filter load level

3 - CALCULATION OF THE WEIGHT OF SOOT PRESENT IN THE PARTICLE FILTER

The engine management ECU incorporates maps modelling the weight of soot present in the particle filter, according to the type of driving encountered by the vehicle.

The engine management ECU calculates the emissions of soot from the vehicle each time it is driven (in grammes).

The calculation of the emissions of soot takes into account :

- Emissions based on stabilised points (engine speed/torque) recorded in a mapping
- A correction in accordance with the difference in the mixture

The combination of these two values determines the theoretical moment of the regeneration.

4 - OPERATING SAFETY FEATURES : DIFFERENTIAL PRESSURE

> **WARNING :** The differential pressure is used only as SAFETY vis-à-vis the particle filter and/or the engine. In the event of the filter becoming overloaded or clogged (very unfavourable driving conditions)

The amount of particles present in the filter causes its load loss to vary (input / output differential pressure).

This permanently measured value represents the load level of the particle filter.

The engine management ECU's maps incorporate 4 levels of operation determined by graphs, from the calculation of the volume of the flow of exhaust gas.

The volume flow rate of exhaust gases is essentially calculated from the following parameters :

- Differential pressure
- Inlet air flow
- Atmospheric pressure
- Exhaust gas temperature (downstream of the catalytic converter)

4 - 1 - Load levels of the particle filter

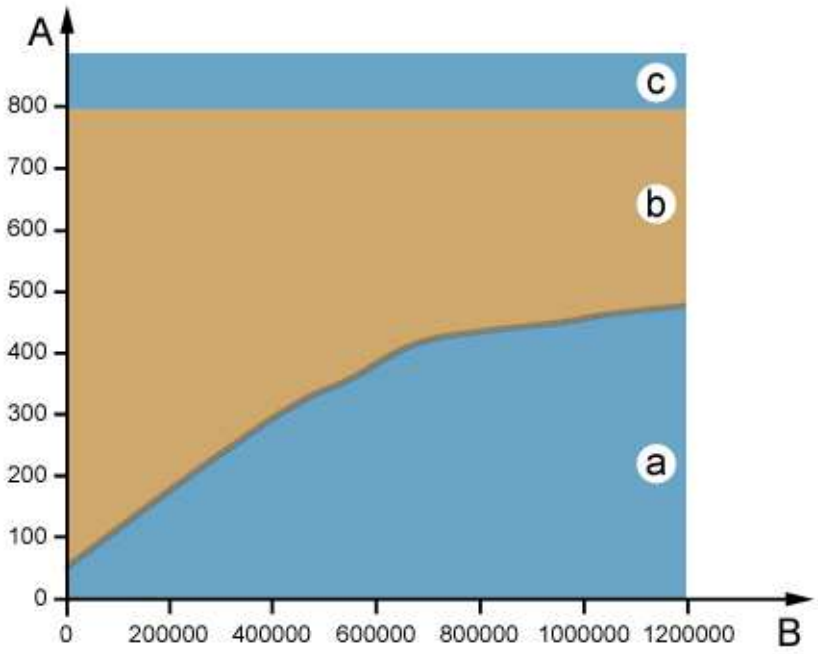

b1ha0fzd

"A" : Differential pressure (mbar).

"B" : Volume flow rate of exhaust gases (l/h).

"a" : Intermediate zone.

"b" : Filter overloaded.

"c" : Blocked filter.

> **NOTE :** These states can be read using the diagnostic tool, in parameter measurements

The objective of the engine management ECU is a continuous "a" status (whatever the vehicle mileage).

The engine management ECU issues a regeneration assistance request to return to zone "a" (depending on the driving conditions).

The engine management ECU requests activation of the regeneration assistance function in the following case : Load level of the filter in zone "b" or "c".

4 - 2 - Filter punctured

The differential pressure is less than a limit, depending on volume flow rate.

Possible fault causes :

- Incorrect information from the differential pressure sensor
- Sealing fault of the exhaust pipe, upstream/downstream information pipes
- Filter actually punctured
- Particle Emission Filter absent

The engine management ECU interrupts any regeneration assistance request and signals a fault accompanied by lighting of a warning lamp on the instrument panel.

> **NOTE :** The "filter punctured" fault may be due to an excess temperature during a regeneration as the amount of burnt particles may be too great

4 - 3 - Filter overloaded

This is a warning state (Zone "b").

4 - 4 - Blocked filter

The differential pressure is continuously higher than 800 mbars (maximum counter-pressure permitted by the engine), or higher than a threshold which depends on the flow volume (Zone "c").

Possible fault causes :

- Regeneration assistance ineffective
- Filter clogged with cerine
- Incorrect information from the differential pressure sensor
- No additive

The engine management ECU interrupts any regeneration assistance request and signals a fault.

> **ESSENTIAL :** If the "filter clogged" fault occurs, it is essential to locate the origin of the clogging or else the filter will be damaged

5 - CORRECTION OF THE LOAD LEVELS DEPENDING ON THE AMOUNT OF CERINE

The cerine present in the fuel :

- Is not burnt with the soot
- Builds up on the walls of the particle filter

Therefore, the engine management ECU continuously adapts its maps in relation to the quantity of cerine accumulated in the particle filter.

6 - EFFECT OF THE DRIVING CONDITIONS ON THE DIFFERENTIAL PRESSURE

The change in differential pressure also depends on the following parameters :

- Fuel consumption (fuel with additive) (quantity of additive present in the filter)
- Vehicle driving conditions (activation of post injection)
- Exhaust gas temperature
- Speed of the exhaust gases in the particle filter

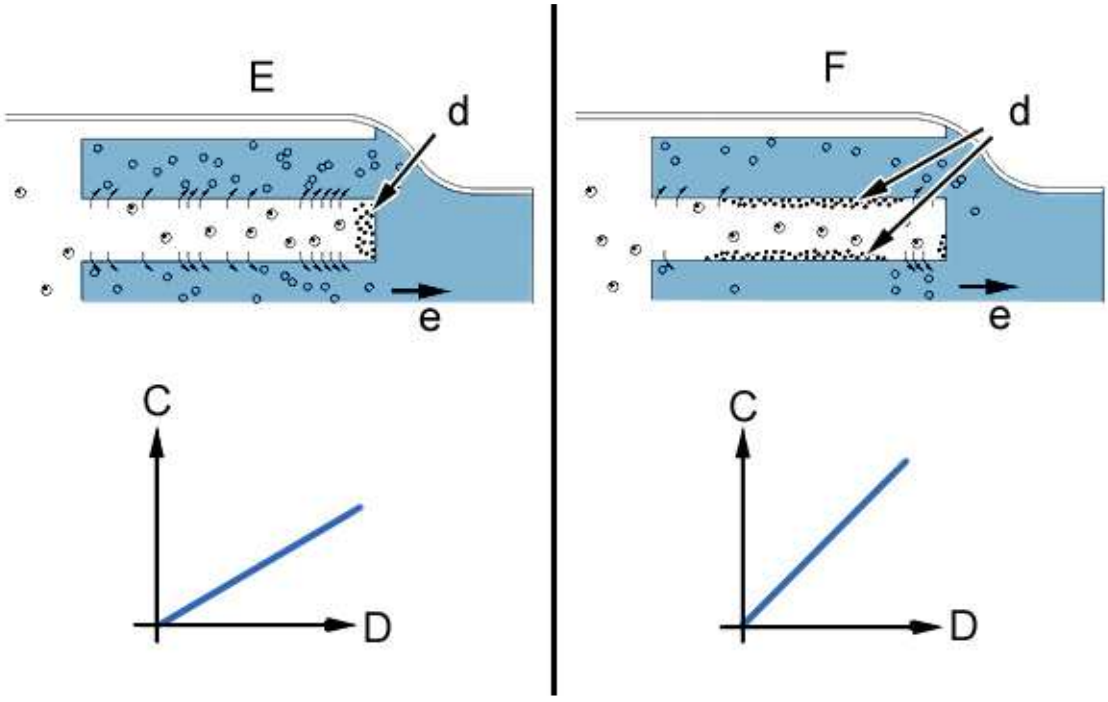

b1ha0g0d

"C" : Volume flow rate of exhaust gases (l/h).

"D" : Differential pressure (mbar).

"E" : Road or motorway type driving (before regeneration).

"F" : Urban type driving (before regeneration).

"d" : Deposits (cerine, soot, unburned hydrocarbons, oil deposits, etc).

"e" : Filtered exhaust gases.

Example "E" :

- The deposits form at the bottom of the particle filter
- The gases pass easily through the channels, the differential pressure is low

Example "F" :

- The deposits form in a stratified layer on the channels
- The gases have problems passing through the channels, the differential pressure is high

> **WARNING :** For the same amount of albanite and for the same vehicle mileage, the differential pressure may vary

7 - FUNCTION : REGENERATION ASSISTANCE MANAGEMENT

Role :

- To manage requests from the monitoring function
- To activate the functions required for regeneration, depending on the monitoring states
- To determine the required level of regeneration assistance
- To control the effects of post injection on engine operation

Regeneration consists of periodically burning the particles that have accumulated on the filter and allowing it to remain in zone "a".

Filter regeneration depends on the temperature of the exhaust gases which must be above the soot combustion limit.

There are 3 methods of regeneration :

- Natural regeneration
- Artificial regeneration (regeneration assistance)
- Regeneration in after sales

7 - 1 - Natural regeneration

When the exhaust temperature reaches the regeneration limit itself (high engine load) :

- The particles burn naturally in the particle filter
- No external actions are performed to activate regeneration

In a natural regeneration, or in any type of assisted regeneration, the particle filter monitor records the quantity of particles being burned.

7 - 2 - Artificial regeneration (regeneration assistance)

The regeneration assistance is a set of provisions managed by the engine management ECU, the aim of which is to increase the temperature of the exhaust gas to the regeneration threshold.

7 - 3 - Ascertaining the required level of regeneration assistance

There are two types of regeneration assistance, depending on the thermal status of the exhaust line :

- Level 1 regeneration assistance (cartographic maps for cold exhaust pipe and catalytic converter) (catalytic converter pre-heating, up to 250°C)
- Level 2 regeneration assistance (mapping for hot exhaust line. Temperature higher than 250°C)

7 - 4 - Level 1 regeneration assistance

When the monitoring function estimates that the soot level is considerable and that the capability of the engine to regenerate the particle filter (driving conditions, temperature, etc.) is sufficient, it requests the activation of the level 1 regeneration assistance.

When each activation request is issued, the engine management ECU carries out the following operations :

- Prohibition of regulation of EGR (exhaust gas recycling)
- Request for activation of electrical consumers (Heated rear screen ; Heated mirrors ; electric cooling fan unit)
- Under-setting the main injection to increase the exhaust temperature
- Manipulation of the air mixer

7 - 5 - Level 2 regeneration assistance

The principle is identical to the level 1 regeneration assistance, but the addition of post-injections allows the temperature of the exhaust gas to be higher.

The change from level 1 to level 2 regeneration assistance depends on the following conditions :

- Exhaust temperature
- Until the temperature has reached 250°C

The engine management ECU activates one or two post-injections depending on the engine speed and the engine load.

7 - 6 - Regeneration assistance activation conditions (through the monitoring function)

Parameters which can activate regeneration assistance :

- Amount of soots present in the particle filter
- Differential pressure

parameters	Nature of signal	Regeneration assistance
		Amount of soots present in the particle

Amount of soots present in the particle filter (calculation)	Activation	filter since the last regeneration (above a threshold) (*)
	Deactivation	Effective post injection time (above a threshold) (*)
Differential pressure (measure)	Activation	Differential pressure (above a threshold)
	Deactivation	Effective post injection time (above a fixed threshold)
Differential pressure sensor fault	Activation	Differential pressure sensor fault
	Deactivation	Effective post injection time (above a fixed threshold)

(*) Depending on the driving conditions.

7 - 7 - Differential pressure

The parameter of differential pressure activates the regeneration help independently of the information on soot amounts.

When it is this condition determining activation of the regeneration assistance, to stop the regeneration assistance it is necessary for time for effective post-injection to have elapsed (The post-injection time allows for the soots to be completely burnt up, given normal operation).

The post injection time limit is used :

- To prevent a post injection time which is too long (engine deterioration, dilution of engine oil)
- To limit the over-consumption of fuel

NOTE : The engine management ECU orders a regeneration of at least 10 minutes when there is a request for regeneration due to an excessively high differential pressure

7 - 8 - Other conditions

Other conditions allowing activation of regeneration assistance :

- History of vehicle usage
- Capability of the engine to regenerate instantaneously
- Distance travelled since the last regeneration

History of vehicle usage ; The engine management ECU records the distances between the last 10 regenerations :

- The record of the driving conditions is updated every hour-and-a-half
- The engine management ECU defines the vehicle's driving profile and anticipates the most favourable moment for activation of the regeneration of the particle filter, in relation to the history of use of the vehicle

Regeneration capability : The engine management ECU determines a regeneration capability (in %) according to the vehicle condition at a given moment "T" (exhaust gas temperature, speed, acceleration under full load, etc.). Depending on the regeneration capability, the engine management ECU can request regeneration assistance.

Distance travelled since the last regeneration : The engine management ECU records the distance covered since the last regeneration and orders regeneration assistance when the distance exceeds a certain threshold (between 800 and 1000 km).

> **NOTE :** Regeneration of the particle filter can only be ordered when the engine coolant temperature is above 60°C

7 - 9 - Regeneration in after sales

After sales regeneration assistance can be carried out using the diagnostic tool.

During a regeneration in after sales, the engine management ECU updates the particle filter soot load level.

8 - EFFECTS OF REGENERATION ASSISTANCE ACTIVATION

8 - 1 - Prohibition of exhaust gas recycling (EGR) regulation

Each time the regeneration assistance is activated, the engine management ECU prohibits the exhaust gas recycling (E.G.R.) regulation : Exhaust gas recycling valve closed (preventing any pumping phenomena).

8 - 2 - Activation of electrical consumers

Function of activation of electrical consumers :

- To increase the resistant torque of the alternator, leading to an increase in engine load
- To aid the rise in temperature of the exhaust gases
- To place the engine operating point quickly within the conditions allowing efficient post injection

The engine management ECU activates electrical consumers which absorb a high level of power (alternator saturation request).

In order to avoid a drop in voltage, the electrical consumers are activated in stages, the engine management ECU applies a timed period of 10 seconds between each electrical consumer activation.

Chronology of activation of the electrical consumers (*) :

- Request to the BSI 1 for activation of the heated rear screen
- Control of the fan assembly

(*) Allowed by the load shedding level of the vehicle (for as long as the battery voltage is greater than 12,8 volts).

> **NOTE :** The electrical consumers are deactivated in the reverse order to activation and in stages separated by a timed period of 5 seconds

8 - 3 - Closing of the butterfly housing mixer - Valve system

The butterfly housing mixer is controlled to meet the air flow management needs during the particle filter regeneration phase.

The butterfly housing mixer varies the pressure of the air admitted in relation to its degree of opening.

The closing of the butterfly housing mixer enables the following operations :

- Limiting the quantity of fresh air inducted by the engine
- Augmenting the combustion richness of the mixture
- Increasing of the engine load by compensation from the engine management ECU
- To aid the rise in temperature of the exhaust gases
- Improving of the effectiveness of the post-injection by appropriate management of the air flow

8 - 4 - Post-injection

The catalytic converter, located upstream of the particle filter, is an oxidation catalytic converter.

In the presence of unburned hydrocarbons (HC), the thermal efficiency of the catalytic converter increases.

The temperature of the exhaust gases increases.

During post injection :

- Fuel is injected after Top Dead Centre (30 - 160° crankshaft)
- The temperature of the exhaust line rises progressively until it is permanently higher than the threshold for regeneration

Once the regeneration limit has been reached, post injection is maintained until all particles have been removed.

The flow and post injection time are determined by cartographic maps taking into account engine operating conditions.

> **NOTE :** Post-injection at idle or return to idle, to limit cooling of the particle filter

8 - 5 - Effects on engine operation

At constant engine speed and load, post injection leads to an increase in engine torque.

In order to maintain the same level of driving pleasure and prevent engine hesitation during the post injection, the engine management ECU software incorporates the following strategies :

- Reduction in main injection flow
- Boost pressure regulation

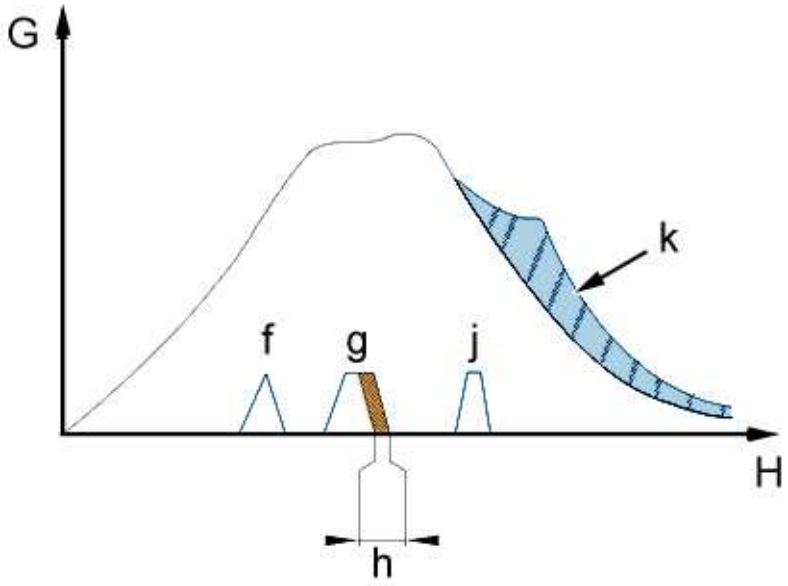

b1ha0g1d

"G" : Cylinder pressure (bar).

"H" : Time(s).

"f" : Pre-injection.

"g" : Main injection.

"h" : Reduction in main injection time.

"j" : Post-injection.

"k" : Reduction in cylinder pressure.

Reducing the main injection flow allows the increase in torque due to post injection to be cancelled.

To remain at the same (iso) engine torque during the regeneration assistance, the fuel flow is regulated.

9 - DISPLAYING FAULTS - BACK-UP OPERATING MODES

9 - 1 - Displaying faults

The appearance of certain faults in the particle filtration system leads to the illumination of the engine diagnostic LED.

The particle filter failure warning light comes on if there is a fault in the following components or information :

- Differential pressure sensor

- Exhaust gas temperature sensors (downstream of the catalytic converter)
- Holed particle filter

When the particle filter is clogged, the particle filter clogged warning light is switched on on the instrument panel.

9 - 2 - Back-up operating modes

The injection system manages the following back-up modes : An operating mode with a reduced fuel flow.

9 - 3 - Reduced fuel flow

This back-up operating mode limits fuel flow, and the engine speed cannot under any circumstances exceed 2750 rpm.

The injection system switches to "reduced flow" mode when a fault is present on one of the following components :

- Clogged particle filter
- Differential pressure sensor (*)

9 - 4 - Fuel additive function - Operation in degraded modes

2 main strategies are used if the additive systems develops faults.

Fuel sender fault.

The engine management ECU makes an addition equivalent to filling of the fuel tank ; When the fuel tank filling condition is detected.

Failure in communication on the multiplexed CAN network.

The engine management ECU makes an addition equivalent to filling of the fuel tank ; When communications are interrupted for more than 10 seconds.

10 - DRIVER'S INFORMATION FUNCTION

10 - 1 - Diagnostic warning lamp

Normal operation of the warning lamp :

- The lamp illuminates when the ignition is switched on
- After the ignition is switched on, the LED extinguishes after a 4 second timer

Warning lamp not operating as normal :

- The lamp illuminates when the ignition is switched on
- The warning lamp remains on

10 - 2 - Risk of particle filter clogging

In the event of prolonged idling, regeneration assistance is ineffective (exhaust gas temperature insufficient).

The filter is clogged by particles.

The engine management ECU informs the BSI1.

The BSI1 requests the displaying of a message on the multifunction screen (risk of particle filter clogging).

The aim is to encourage the customer to adapt his driving to facilitate particle filter regeneration.

Within 100 kilometres after the message appears, the customer must drive for at least 3 minutes at a speed greater than 50 km/h which should cause the message to disappear.

Failure to comply with this recommendation will lead to the following fault : Clogged particle filter.

The engine management ECU informs the BSI1 which requests activation of the following components :

- Request to switch on the particle filter clogged warning light
- Request to display a message on the multifunction screen (antipollution problem)

10 - 3 - Minimum level of additive reached

The engine management ECU informs the BSI 1 which requests the displaying of a message on the multifunction screen (minimum diesel additive level) (after the ignition is switched on) (*).

(*) Depending on vehicle equipment.

Procedure for service LED switching off.

After refilling the additive reservoir, the service warning lamp remains on until the additive quantity counter has been reset to zero.

FUNCTION : EXHAUST GAS RECYCLING (EGR)

1 - SCHEMATIC DIAGRAM

1 - 1 - Non-cooled exhaust gases

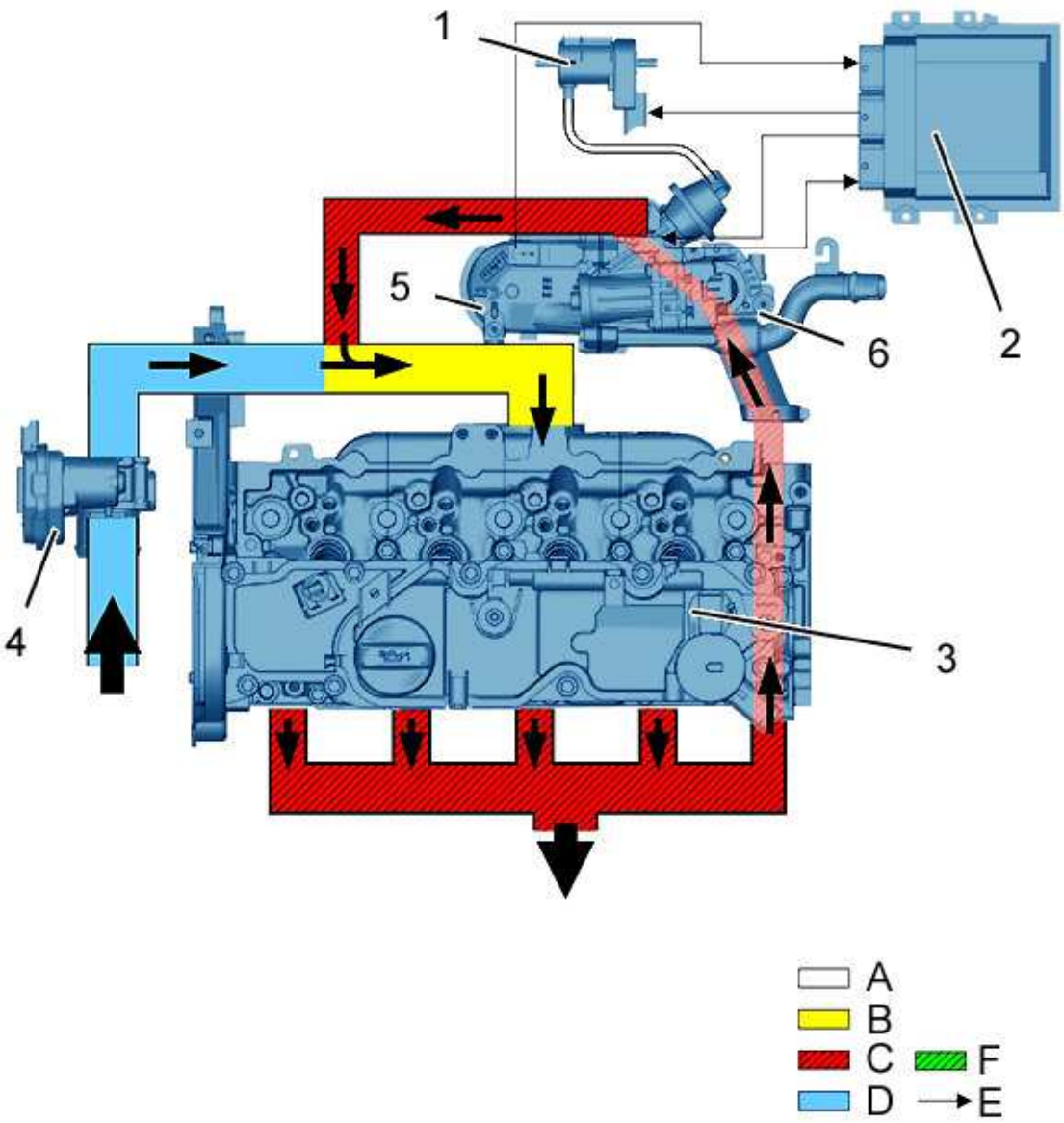

b1ka00op

Key :

- "A" Control vacuum
- "B" Mixture of inlet air and recycled exhaust gas
- "C" Exhaust gas
- "D" Air inlet
- "E" Electrical links
- "F" Cooled exhaust gases

Reference	Designation	Electrical diagram correspondence
1	Electrovalve controlling the EGR exchanger by-pass	1253
2	Engine ECU	1320
3	Cylinder head	-
4	Air intake mixer	1324
5	Exhaust gas recycling (EGR) heat exchanger	-
6	Electrically-controlled exhaust gas recycling valve (EGR)	1297

1 - 2 - Cooled exhaust gases

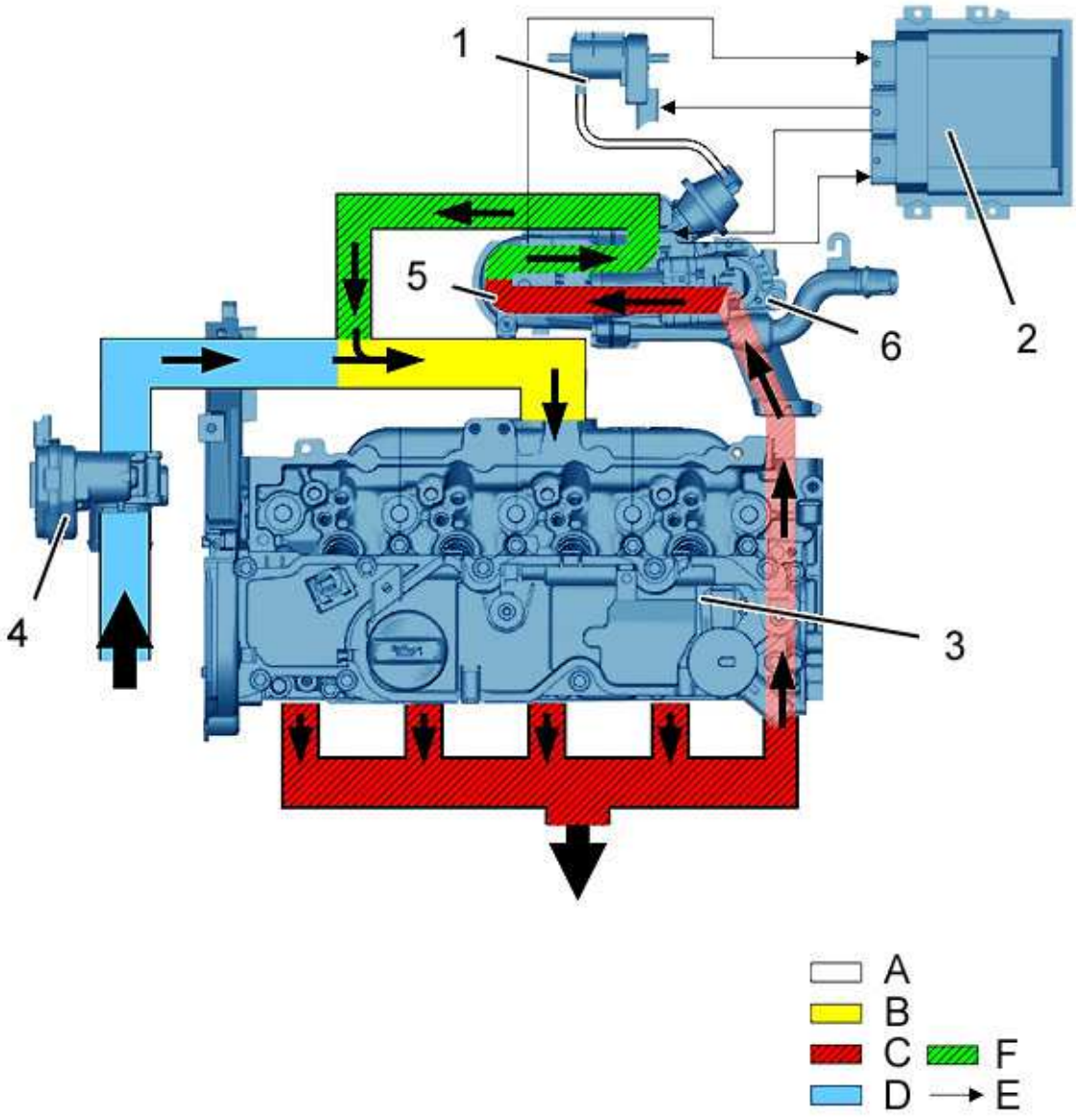

b1ha0elp

Key :

- "A" Control vacuum
- "B" Mixture of inlet air and recycled exhaust gas
- "C" Exhaust gas
- "D" Air inlet
- "E" Electrical links
- "F" Cooled exhaust gases

Reference	Designation	Electrical diagram correspondence
1	Electrovalve controlling the EGR exchanger by-pass	1253
2	Engine ECU	1320
3	Cylinder head	-
4	Air intake mixer	1324
5	Exhaust gas recycling (EGR) heat exchanger	-
6	Electrically-controlled exhaust gas recycling valve (EGR)	1297

2 - ROLE

To comply with the emission standards, the quantity of nitrous oxide (NOx) thrown out by the exhaust must be the lowest possible.

The exhaust gas recycling (EGR) device reduces the amount of nitrogen oxide (NOx) emitted by the exhaust.

3 - FUNCTION

3 - 1 - Exhaust gas recycling

The high temperatures, caused by the excess air combustion mode proper to diesel engines, produce a large amount of nitrous oxide (NOx).

The admission of exhaust gas into the combustion chamber reduces the quantity both of oxygen and of nitrogen present at combustion.

The temperature of combustion is then lessened, which reduces the amount of nitrous oxide (NOx) emitted.

Some of the exhaust gas is diverted into a duct linking the exhaust to the air intake.

This duct is closed by an electric EGR valve.

On the command of the engine ECU, the electric EGR valve opens, giving the exhaust gases a controlled access to the inlet manifold.

NOTE : Too large a quantity of recycled exhaust gas causes an increase in emissions of

soot, of carbon monoxide (CO) and of hydrocarbons (HC) by reason of poor combustion due to lack of air

In addition to opening the electric EGR valve, the engine ECU orders the air mixer to close partially.

The closing of the air mixer causes :

- A vacuum in the inlet manifold, drawing in the exhaust gases
- A diminution of the amount of air entering

3 - 2 - Cooling of the recycled exhaust gases

Cooling of the exhaust gases enables the emissions of nitrous oxide (NOx) to be further reduced.

The exhaust gases are able to be cooled, in order to prevent the total mix of air from reaching too high a temerature (Mixture of inlet air and recycled exhaust gas).

In certain operating phases, the exhaust gases do not have to be cooled before being admitted into the combustion chamber (Notably during cold starts, to allow the engine to warm up more rapidly).

The engine ECU, by means of a pneumatic electrovalve, operates a by-pass by which the exhaust gases go directly to the air inlet without passing through the EGR exchanger.

The by-pass is activated up to an engine coolant temperature of 60°C.

3 - 3 - Initialisation of the stops of the electric EGR valve

To mitigate ageing and clogging of the EGR valve, the engine ECU performs an automatic initialisation of the lower stop when the valve is closed (during full load, foot off or power latch).

The upper stop is calculated by adding 3 V to the position registered at the lower stop, the upper stop being updated at each initialisation of the lower stop.

Taking account of the stop positions initialised automatically and comparing them with the original position initialised at the factory, the engine ECU adapts the setting for control of the EGR valve.

Initialisation of stops is not possible if the battery voltage is lower than 10 V or higher than 14 V.

NOTE : Initialisation can be performed using the diagnostic tool, see Diagnostic Tool Functions

3 - 4 - Cleaning of the electric EGR valve

To prevent soiling of the electric EGR valve, there is a cleaning phase on switching on the ignition.

This cleaning phase consists of 5 successive opening and closing cycles.

At the end of the cleaning cycle, the engine management ECU tries to reach the upper stop (maximum opening) of the electric EGR valve :

- If during this attempt a blockage is detected, the cleaning cycle is repeated
- If, after this second attempt, the valve remains stuck, a fault appears

3 - 5 - Cleaning of the by-pass of the EGR heat exchanger

The engine ECU operates the cleaning (2 up/downs) of the by-pass of the EGR heat exchanger when the engine is running.

Cleaning is activated if the following conditions are met :

- Deceleration (Engine speed between 4000 and 1200 rpm)
- Coolant temperature between 60°C and 120°C

3 - 6 - Antisticking the electric EGR valve

The engine ECU estimates the state of sticking of the electric EGR valve, as a function of the following factors :

- Speed of movement of the gate of the electric EGR valve
- Errors in regulation of the position of the electric EGR valve

If the electric EGR valve begins to stick or sticks : The engine ECU controls the electric EGR valve via a conventional control signal, followed by a vibratory signal to make the electric EGR valve vibrate and thus avoid sticking.

> **NOTE :** The amplitude of the vibratory signal depends on the degree of sticking detected by the engine ECU. The antisticking strategy is used only during phases where the electric EGR valve is being operated

4 - ACTIVATION CONDITIONS

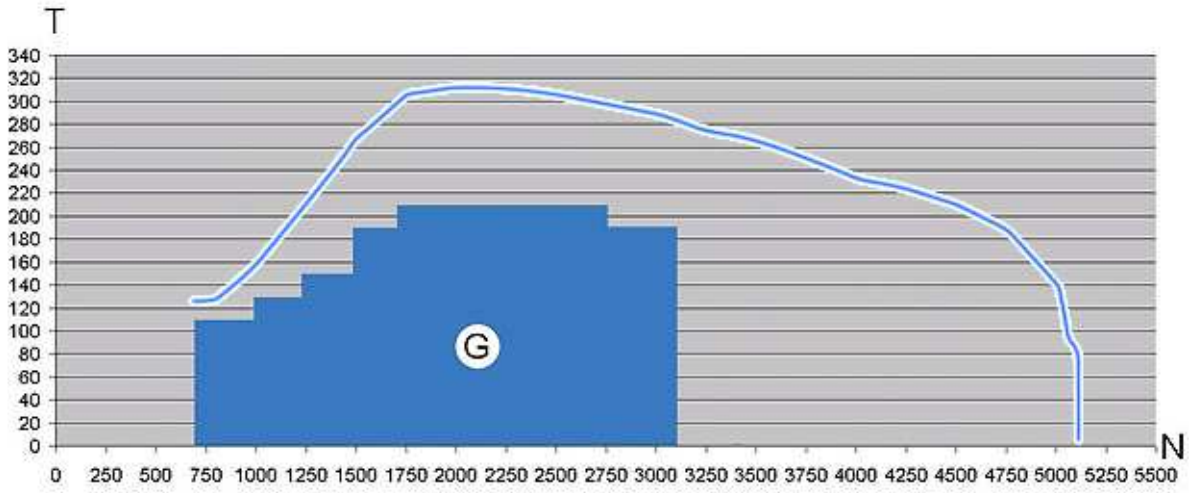

b1ka00pd

"G" Zone of activation of the electric EGR valve.

"N" Engine speed.

"T" Indicated engine torque.

The zone "G" defines the range within which the electric EGR valve is activated.

OPERATING METHODS : DV6C ENGINE (STOP AND START)

1 - PRESENTATION

Stop and start function.

2 - LOCATION

Elements of the stop and start function.

3 - MAN/MACHINE INTERFACE

Stop and start.

4 - DESCRIPTION OF OPERATION : SENSOR CONNECTION

Braking vacuum sensor (1356).

Clutch pedal top position sensor (7306).

Clutch pedal bottom position sensor (1906).

Gear lever in neutral switch. (1405).

5 - DESCRIPTION OF OPERATION : ACTUATOR

Reinforced starter (1010).

6 - DESCRIPTION OF OPERATION : COMPUTER

Central voltage retaining device ECU (1012).

7 - FLOW CHART

Stop and start.

8 - FUNCTION

Stop and Start system.

PRESENTATION : STOP AND START FUNCTION

1 - MAIN ARCHITECTURE OF THE STOP AND START SYSTEM

Special features :

- Reinforced starter
- Special battery
- Stop and Start function activation/deactivation switch
- Gear lever neutral sensor
- Clutch pedal bottom position sensor
- Clutch pedal top position sensor
- Braking vacuum sensor
- Central voltage retaining device ECU

2 - STOP AND START SYSTEM

Special feature of the Stop and Start system :

- Central voltage retaining device ECU
- Management of the load and of the discharging of the battery
- Management of the restarting of the engine by the reinforced starter

LOCATION : ELEMENTS OF THE STOP AND START FUNCTION

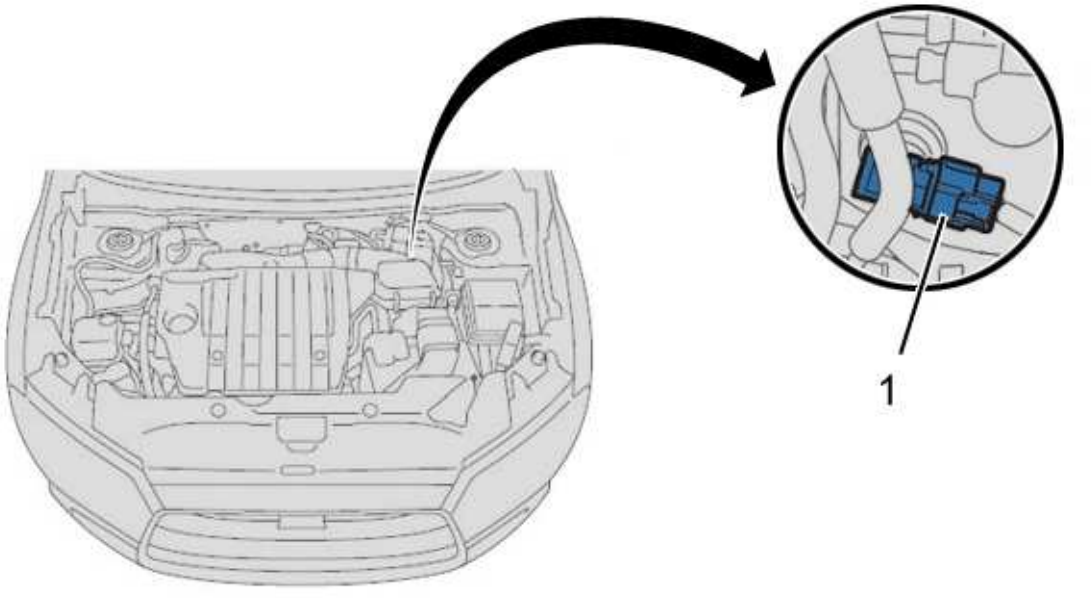

b1hb12td

(1) Braking vacuum sensor.

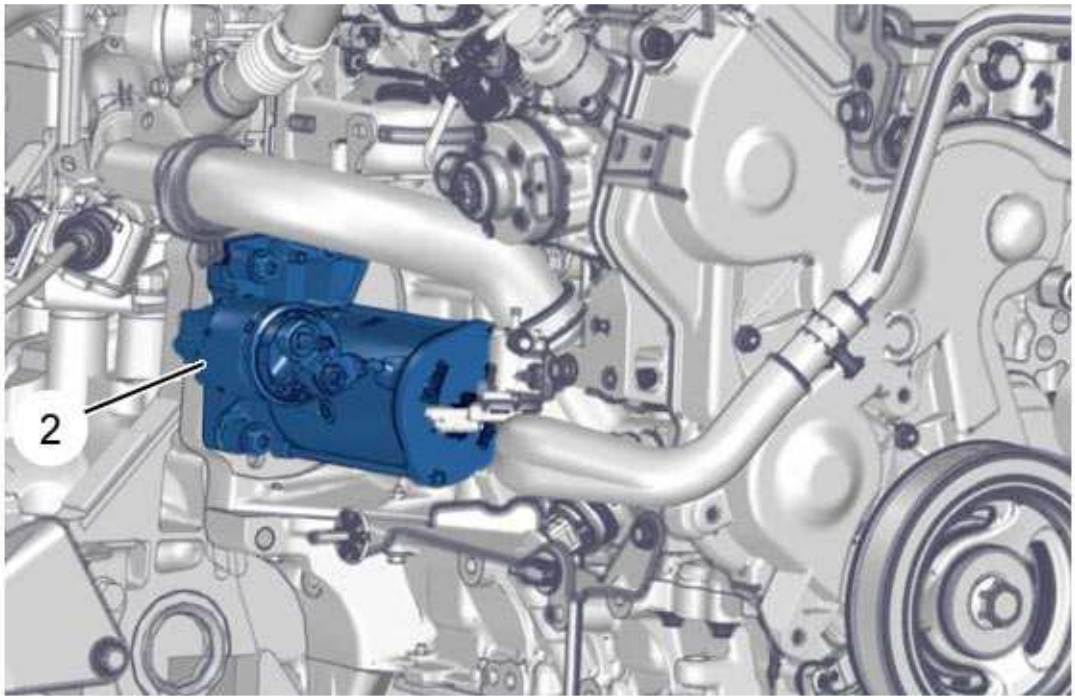

b1hb17ad

(2) Reinforced starter.

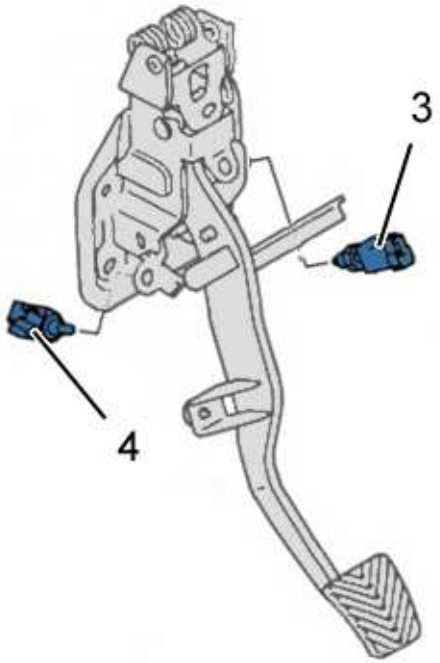

b1hb12vd

(3) Clutch pedal high position switch.

(4) Clutch pedal low position switch.

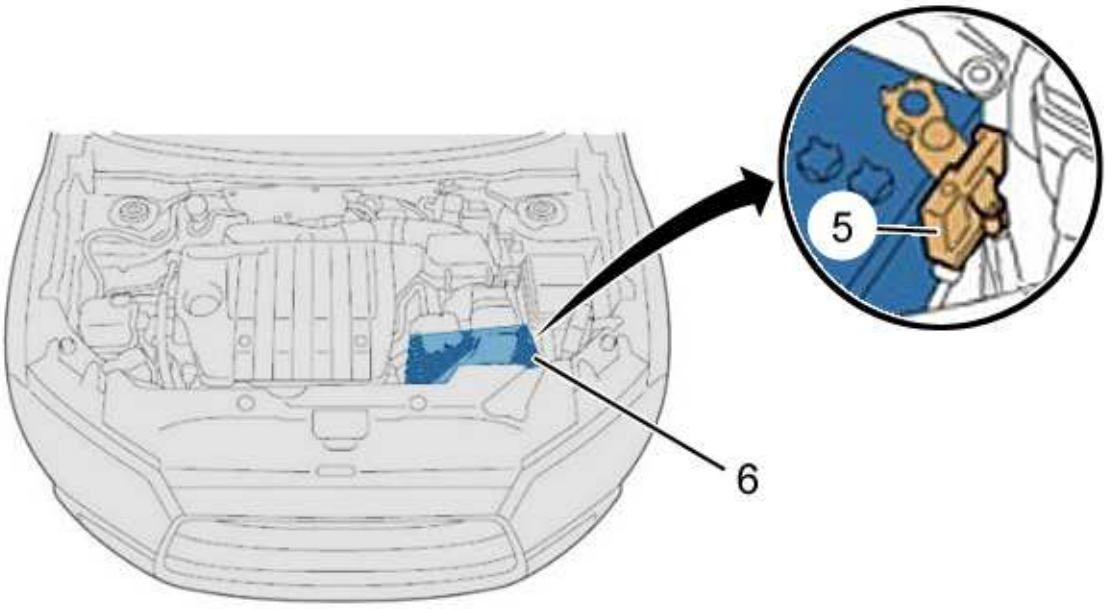

b1hb12wd

(5) Battery charge status unit.

(6) Special battery.

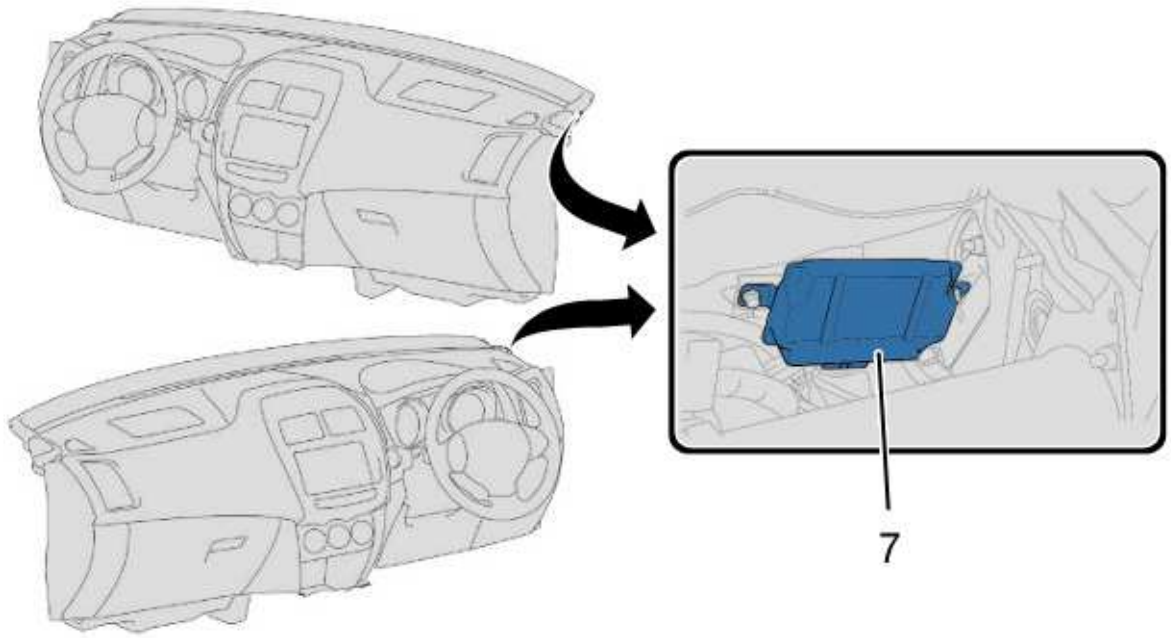

b1hb12xd

(7) Central voltage retaining device ECU.

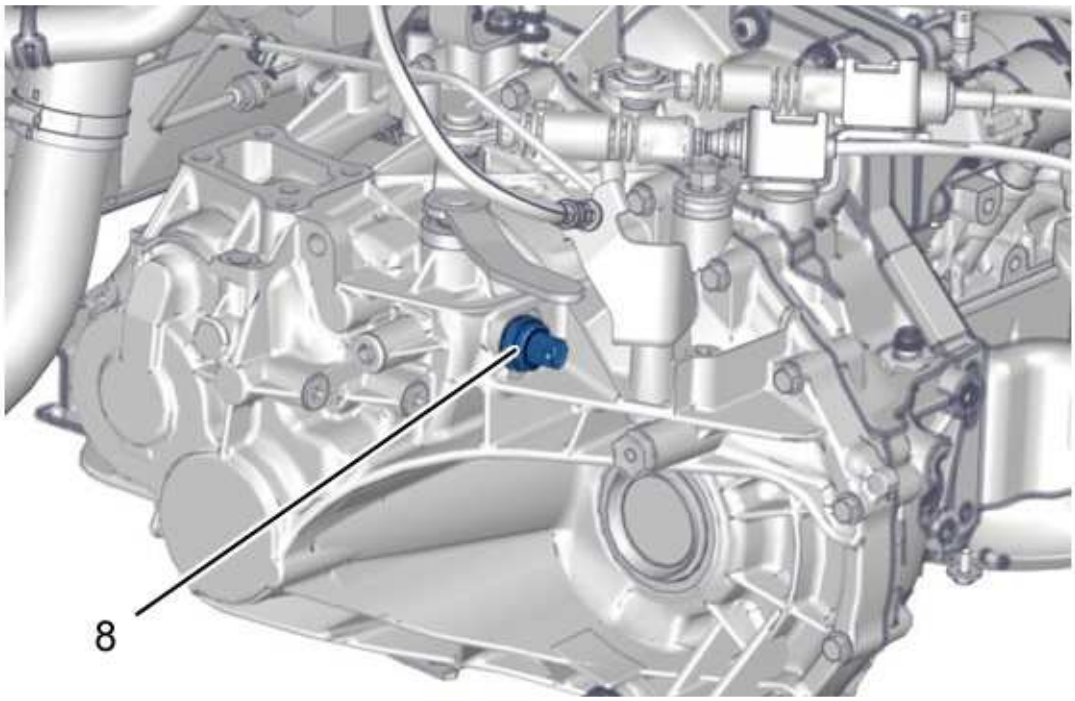

b1hb17bd

(8) Neutral detection sensor.

MAN/MACHINE INTERFACE : STOP AND START

1 - ACTIVATION / DEACTIVATION / ADJUSTMENTS

NOTE : (*) According to version

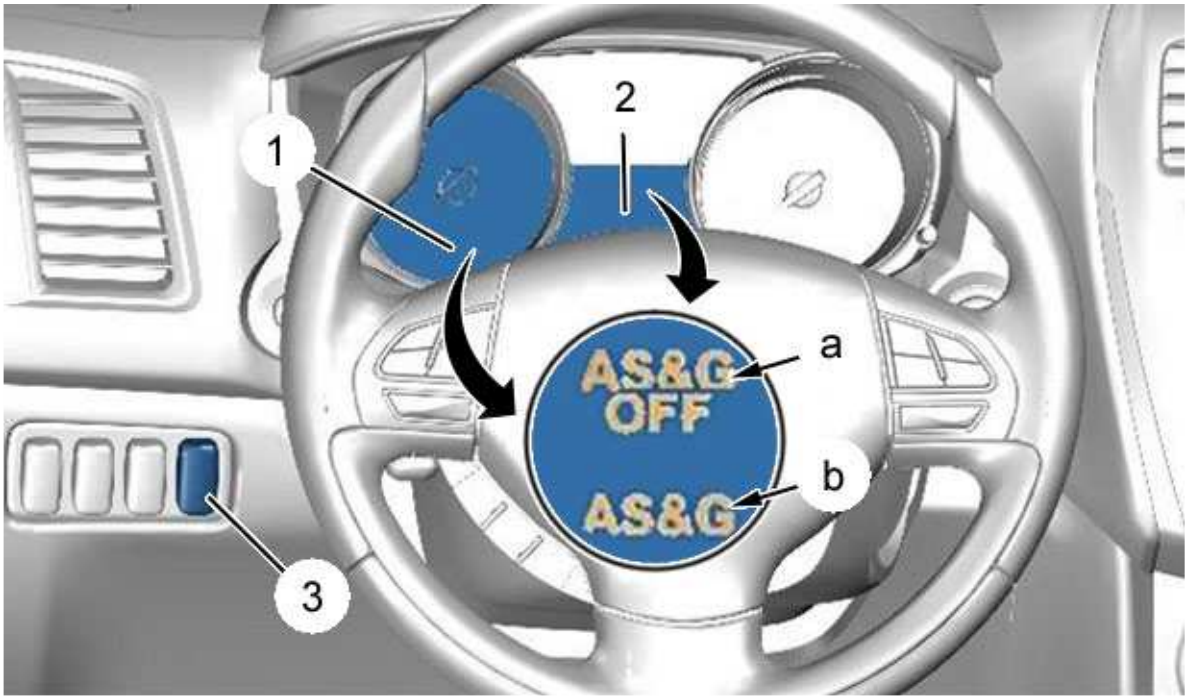

d4ea5w1d

(1) Distance recorder.

(2) Instrument panel display matrix (*).

(3) Stop and Start function activation/deactivation switch.

"a" Deactivation/fault warning lamp for the Stop and Start function (AS&G OFF).

"b" Activation warning lamp for the Stop and Start function (AS&G).

NOTE : The warning lamps AS&G OFF and AS&G display on either the mileage recorder or the instrument panel display matrix (*)

2 - PRESENTATION OF THE SYSTEM INFORMATION

2 - 1 - Activating/deactivating the Stop and Start function

NOTE : The Stop and Start function is operational when you switch on the ignition

A single press on the switch for activating/deactivating the Stop and Start function deactivates the automatic stopping of the engine.

Information on deactivation of the Stop and Start function :

- Lighting of the warning lamp on the Stop and Start function activation/deactivation switch
- Display of the warning lamp " AS&G OFF" on the instrument panel matrix (*)
- Display of the warning lamp " AS&G OFF" on the mileage recorder

A single press on the switch for activating/deactivating the Stop and Start function reactivates the automatic stopping of the engine.

Information on activation of the Stop and Start function :

- Display of the warning lamp " AS&G" on the instrument panel matrix (*)
- Display of the warning lamp " AS&G" on the mileage recorder
- Extinction of the warning lamp on the Stop and Start function activation/deactivation switch

2 - 2 - Information displayed on the instrument panel

AS&G system	Conditions	Warning lamp AS&G OFF	Warning lamp AS&G
Off	Starting switch on "ON" (engine off), Several seconds later	Indicator lamp lit	Off
	While the engine is running	Indicator lamp lit	Off
On	Starting switch on "ON" (engine off), For several seconds	Lamp off	Off
	Engine at idle and during driving	Lamp off	Lamp off
	During the automatic stopping	Lamp off	Indicator lamp lit
	Boot open	Lamp off	Flashing warning lamp
	If the driver's seat belt is not fastened when the ignition is switched on	Lamp off	Flashing warning lamp
	The gear lever is not in neutral, during the engine automatic stop	Lamp off	Flashing warning lamp
ON/OFF	After the ignition is switched, for a few seconds	Indicator lamp lit	Indicator lamp lit
	Fault on the Stop and Start system	Flashing warning lamp	Lamp off

NOTE : After a flashing of the warning lamp "AS&G", restarting must always occur, either with the key or with the starting switch

2 - 3 - Stop and start function fault

Appearance of a fault on the Stop and Start system causes the warning lamp AS&G OFF to flash.

Disappearance of a fault on the Stop and Start system causes the warning lamp AS&G OFF to go off.

DESCRIPTION - FUNCTION : BRAKING VACUUM SENSOR

1 - DESCRIPTION

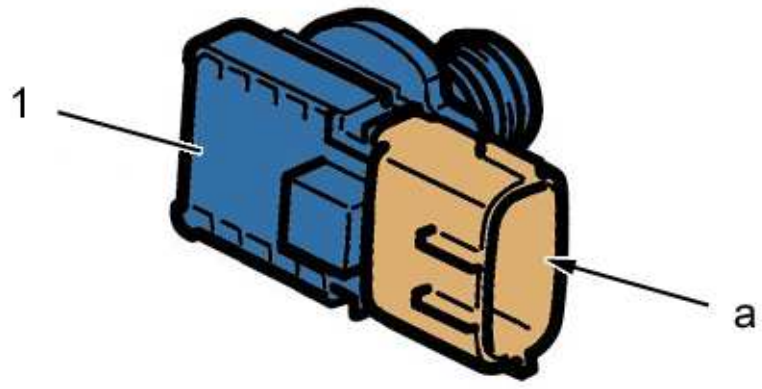

d4ea5v5d

(1) Braking vacuum sensor.

"a" 3-way grey connector .

2 - ROLE

The braking vacuum sensor measures the brake servo vacuum.

3 - FUNCTION

The braking vacuum sensor is a passive sensor of the piezo-resistive type, with integral electronics, supplied with +5V by the engine ECU.

The piezo-resistive sensor receives the vacuum on its surface.

The vacuum applied on the piezo-resistive element changes the resistance of the sensor.

In relation to the resistance of the piezo-resistive sensor, the integral electronics generates a voltage that is proportional to the vacuum measured.

4 - ELECTRICAL FEATURES

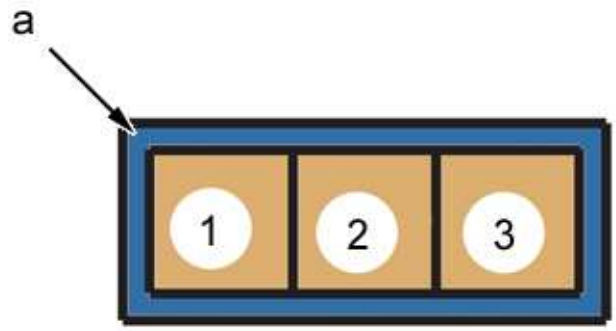

d4ea5v6d

"a" 3-way grey connector	
Channel number	Allocation of channels of connector
1	Earth
2	Sensor signal
3	Supply voltage 5V

5 - PROGRAMMING/INITIALISATION

Not applicable.

DESCRIPTION - FUNCTION : CLUTCH PEDAL SWITCH (CLUTCH PEDAL PRESSED)

1 - DESCRIPTION

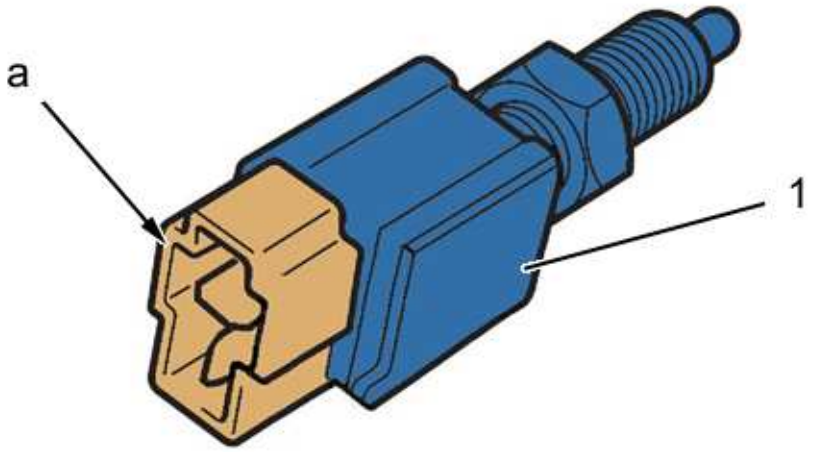

d4ea601d

(1) Clutch pedal switch(Clutch pedal pressed).

"a" Bonnet locking 2.

2 - ROLE

The clutch pedal switch informs the engine management ECU when the driver presses the clutch pedal.

3 - FUNCTION

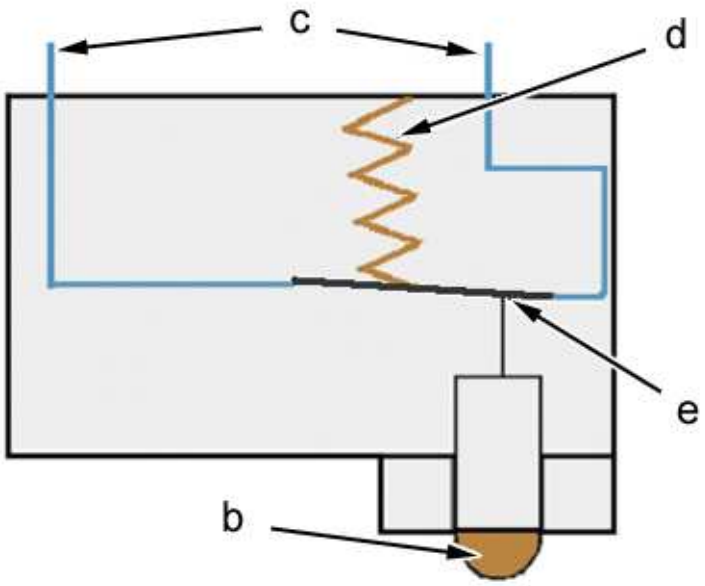

b2bm027d

"b" Contact with the clutch pedal mechanism.

"c" Electrical outputs from the switch.

"d" Return spring.

"e" Electrical contact blade.

The clutch pedal switch is a switch the initial status of which is closed.

When the driver presses the clutch pedal, the contact "b" moves the electrical contact blade "e".

When the electrical contact blade "e" is no longer in contact with the electrical outputs "c", the ECUs receive the information "clutch pedal pressed".

4 - ELECTRICAL FEATURES

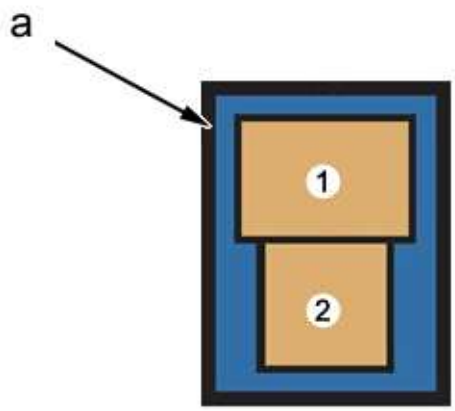

d4ea602d

"a" Bonnet locking 2	
Channel number	Allocation of channels of connector
1	Earth
2	Clutch switch information

5 - PROGRAMMING/INITIALISATION

Not applicable.

DESCRIPTION - FUNCTION : CLUTCH PEDAL LOW POSITION SWITCH

1 - DESCRIPTION

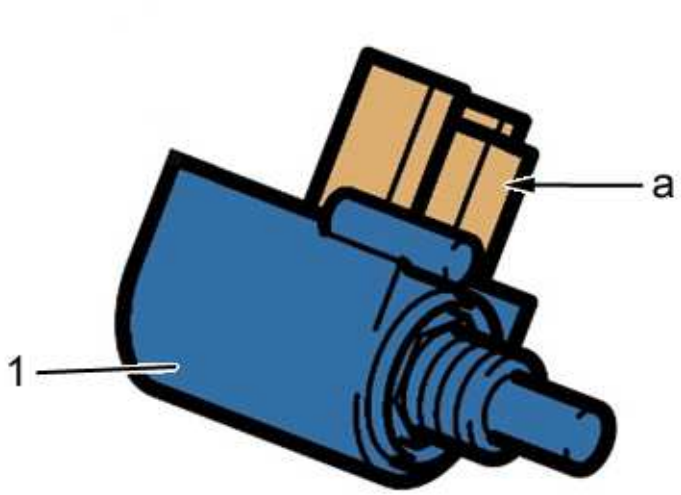

d4ea61wd

(1) Clutch pedal low position switch.

"a" Bonnet locking 2.

2 - ROLE

The clutch pedal low position switch informs the Stop and Start ECU when the driver releases the clutch pedal.

3 - FUNCTION

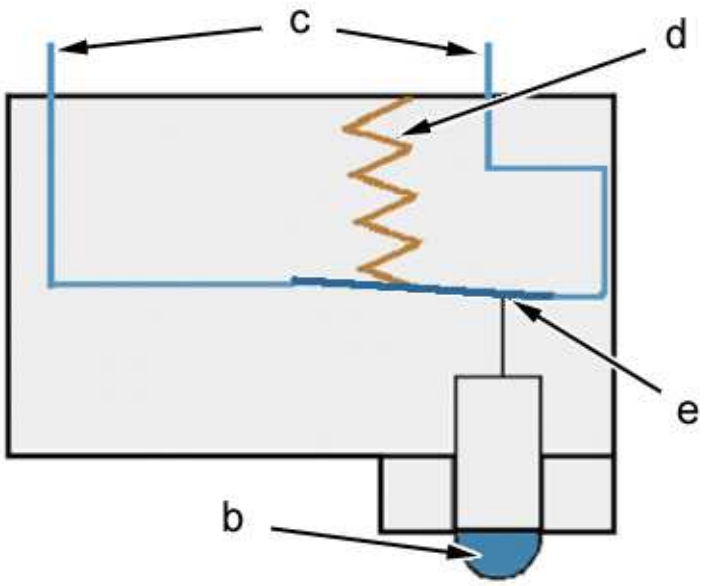

d4ea61xd

"b" Contact with the clutch pedal mechanism.

"c" Electrical outputs from the switch.

"d" Return spring.

"e" Electrical contact blade.

The clutch pedal low position switch is a switch whose initial status is open.

When the driver releases the clutch pedal, the contact "b" moves the electrical contact blade "e".

When the electrical contact blade "e" is in contact with the electrical outputs "c", the engine ECU receives the information "clutch pedal released".

4 - ELECTRICAL FEATURES

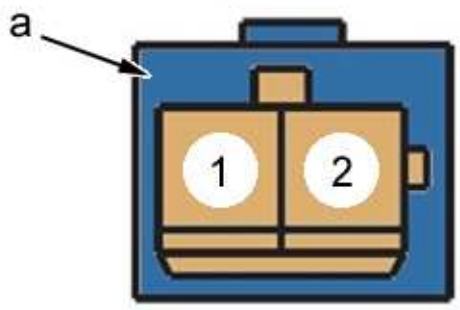

d4ea61yd

"a" Bonnet locking 2	
Number of channels	Allocation of channels of connector
1	12 volts supply
2	Information : Clutch pedal released

5 - PROGRAMMING/INITIALISATION

Not applicable.

DESCRIPTION - FUNCTION : GEAR LEVER IN NEUTRAL SWITCH.

1 - DESCRIPTION

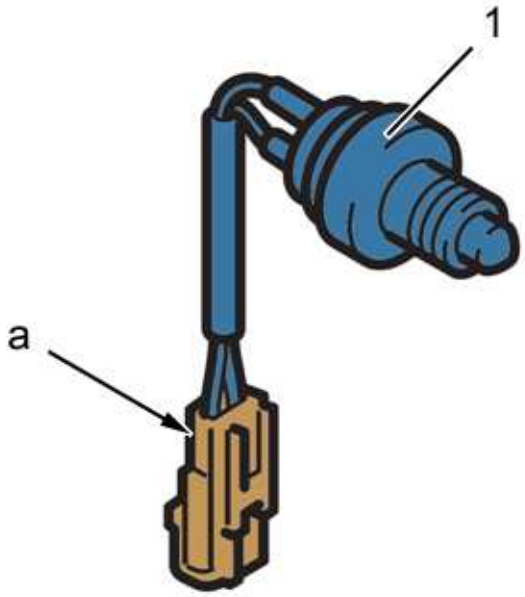

d4ea6iad

(1) Gear lever in neutral switch..

"a" 2-way black connector.

2 - ROLE

The gear lever in neutral switch informs the Stop and Start ECU that the gear lever is placed in neutral.

3 - FUNCTION

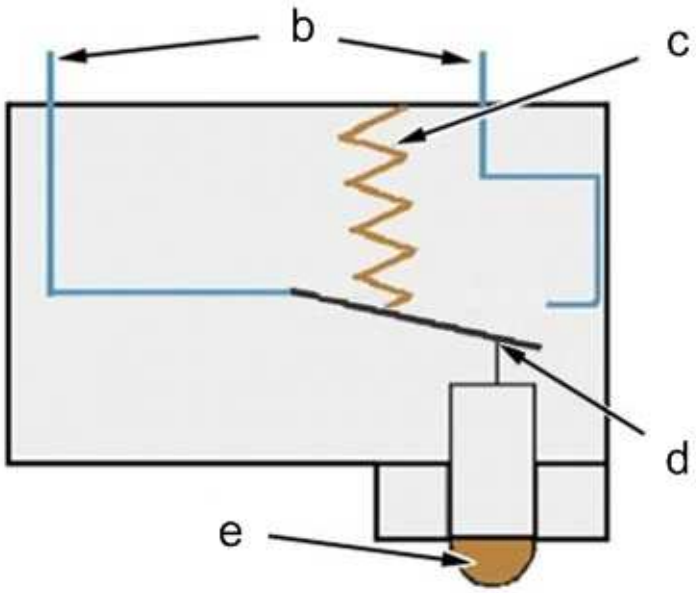

d4ea6ibd

"b" Electrical outputs from the switch.

"c" Return spring.

"d" Electrical contact blade.

"e" Contact with the gear lever in neutral mechanism.

The gear lever in neutral switch is a switch that is open in its initial status.

When the gear lever is in neutral, the contact "e" drives the electrical contact blade "d".

When the electrical contact blade "d" is in contact with the electrical outputs "b", the "gear lever in neutral" information is sent.

4 - ELECTRICAL FEATURES

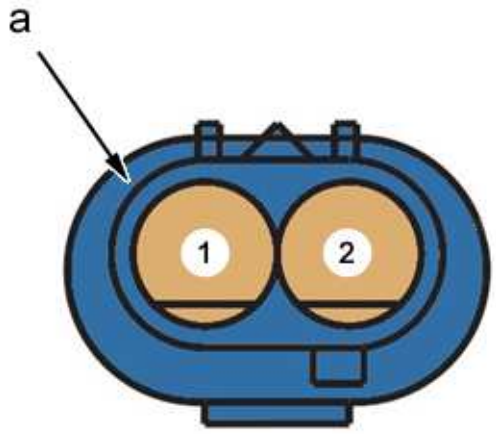

d4ea5v3d

"a" 2-way black connector	
Channel No.	Allocation of channels of connector
1	Position signal : Gear lever in neutral
2	Supply 12V

5 - PROGRAMMING/INITIALISATION

Not applicable.

DESCRIPTION - FUNCTION : REINFORCED STARTER

1 - DESCRIPTION

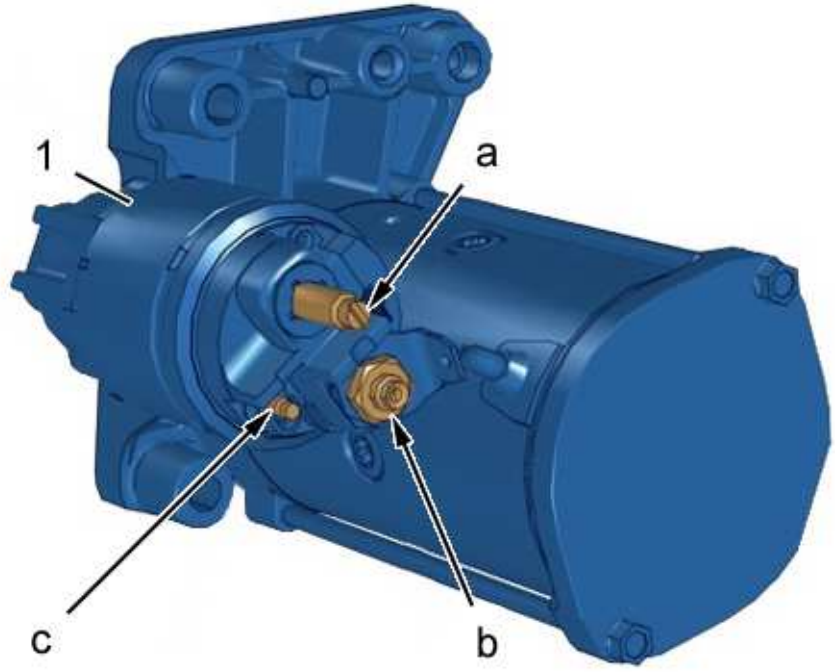

d4ea6m1d

(1) Reinforced starter.

"a" Supply terminal (Battery +).

"b" Brushes control terminal.

"c" Solenoid control terminal (ignition switched +).

Supplier : VALEO.

2 - ROLE

The role of the reinforced starter is to carry out the initial start-up of the engine and the subsequent automatic start-ups.

3 - FUNCTION

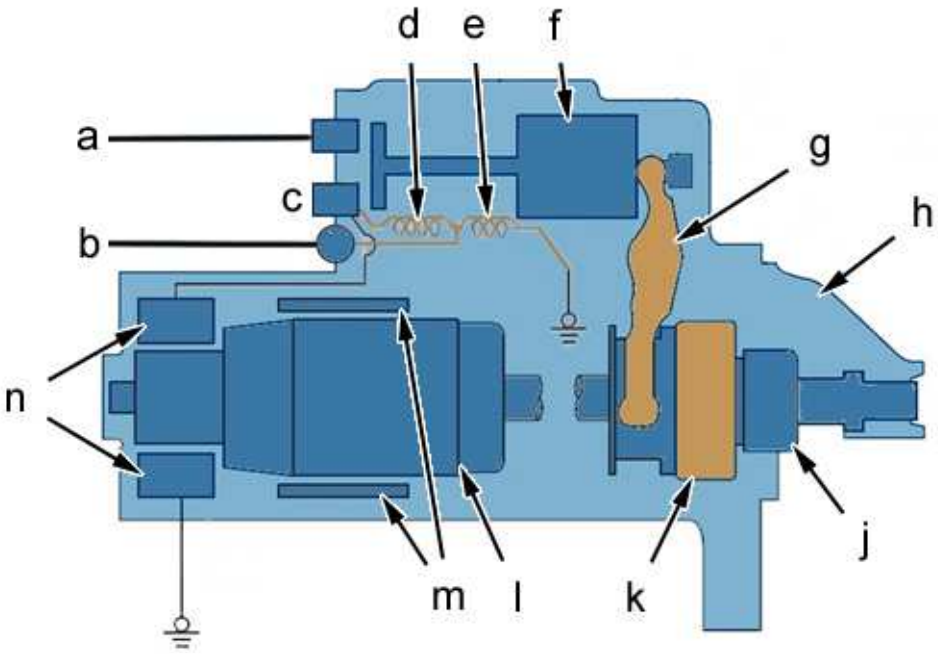

d4ea5zrd

"a" Supply terminal (Battery +).

"b" Brushes control terminal.

"c" Solenoid control terminal (ignition switched +).

"d" Trip coil.

"e" Hold coil.

"f" Plunger.

"g" Fork .

"h" Reinforced starter body.

"j" Reinforced starter pinion.

"k" Free wheel clutch.

"l" Reinforced starter armature.

"m" Reinforced starter field coil.

"n" Brush.

The starter body "h" is in contact with an earth.

The plunger "f" and the fork "g" move transversely when the solenoid control terminal "b" is supplied.

The transverse movement of the plunger "f" creates contact between the supply terminal "a" and the brushes control terminal "c".

The transverse movement of the plunger "f" is transmitted to the reinforced starter pinion "j" via the fork "g".

The supply of the solenoid control terminal "b" is transmitted to the reinforced starter armature "i" via wiring inside the reinforced starter.

A magnetic field driving rotation of the armature and of the reinforced starter pinion "j" is created when the brushes "n" are supplied.

4 - ELECTRICAL FEATURES

Normal supply	11,5 V
Maximum supply current	430A
Resistance of the solenoid	1,25 ± 0,11 ohms
Number of teeth of the reinforced starter pinion	11

5 - PROGRAMMING/INITIALISATION

Not applicable.

DESCRIPTION - FUNCTION : CENTRAL VOLTAGE RETENTION DEVICE

NOTE : (*) According to version

1 - DESCRIPTION

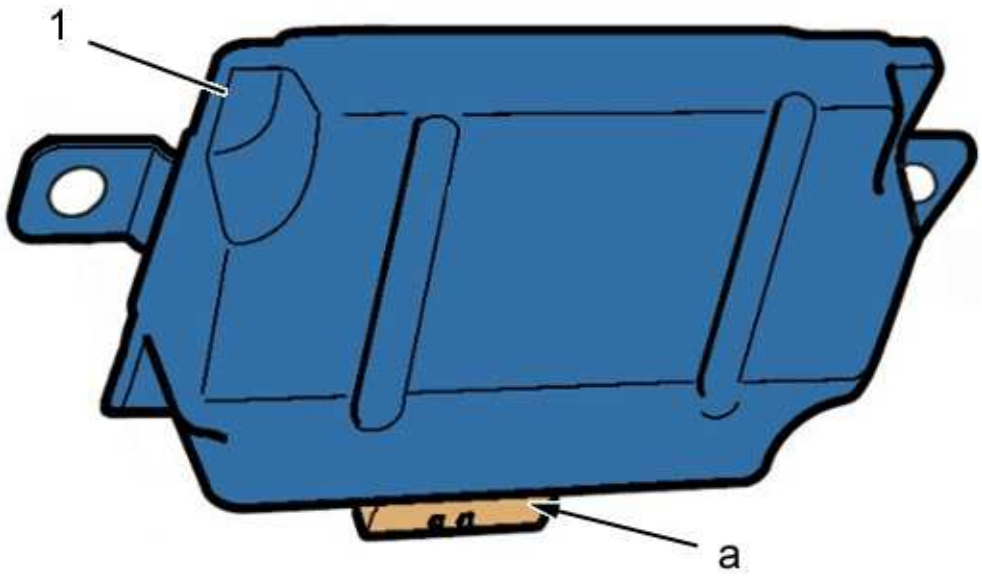

d4ea63rd

(1) Central voltage retaining device ECU.

"a" 10-way grey connector .

2 - ROLE

Functions of the central voltage retention device :

- Maintaining of the supply for the onboard equipment sensitive to drops in voltage during the engine stopping phases (In particular the audio system and GPS navigation) (*)
- Maintaining of the supply for the onboard equipment sensitive to drops in voltage during the phases of restarting of the engine by the Stop and Start function

3 - FUNCTION

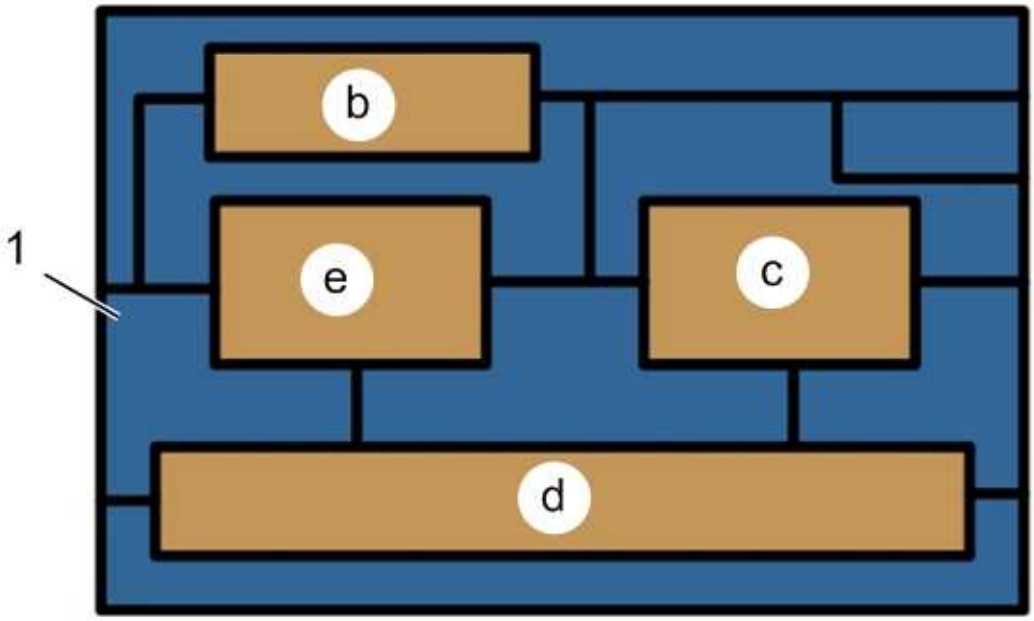

d4ea63sd

(1) Central voltage retaining device ECU.

"b" Turbo section.

"c" + ignition on relay.

"d" Control interface.

"e" Turbo relay.

On automatic restarting, the Stop and Start system ECU sends the central voltage retaining device ECU the signal to request a voltage increase.

If there is a fault on the voltage increase control system, the central voltage retaining device ECU sends a diagnostic signal to the Stop and Start system ECU.

4 - ELECTRICAL SPECIFICATIONS

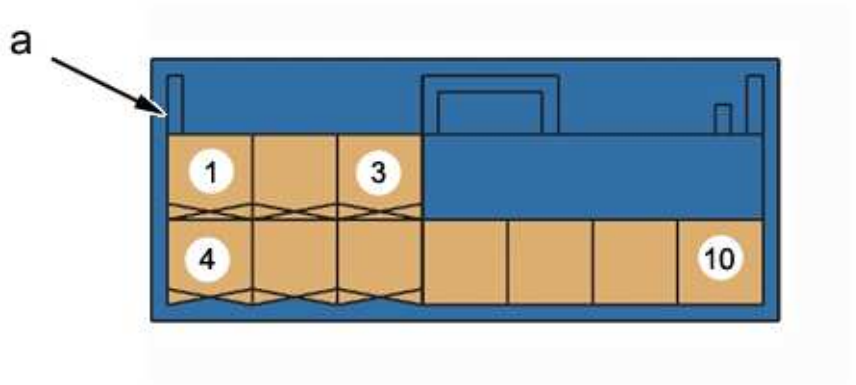

d4ea63td

"a" 10-way grey connector	
Channel number	Allocation of the tracks of the connector
1	Channel not connected
2	Channel not connected
3	Channel not connected
4	Diagnostic signal from the CC/CC converter
5	Control signal from the Stop and Start ECU
6	+accessories supply
7	Hands-free kit ECU
8	Supply for the onboard equipment
9	Battery +
10	Earth

5 - LEARNING / INITIALISATION

Not applicable.

FLOW CHART : STOP AND START

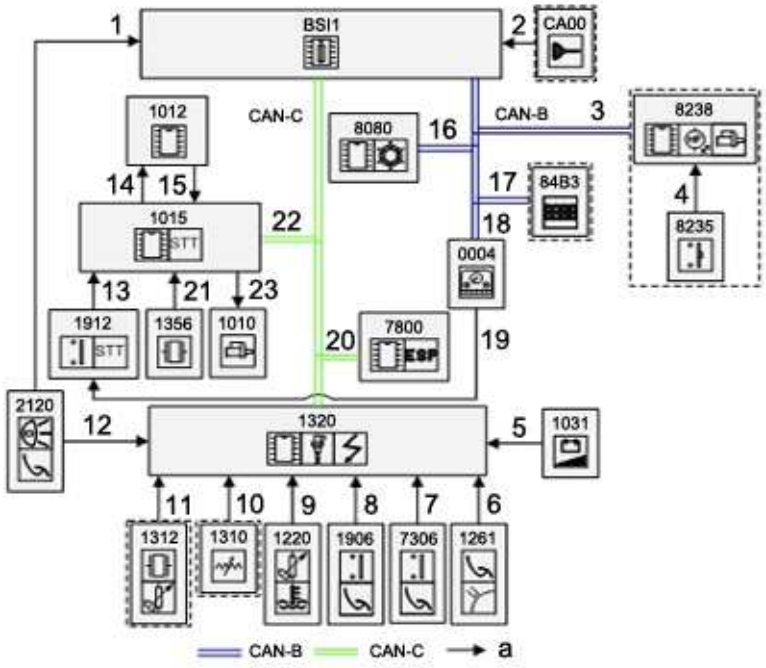

d4ea6itd

Key : "a" Wire connection.

Components description table	
Element	Description
BSI1	Built-in systems interface
CA00 (*)	Ignition switch
0004	Instrument panel
1010	Starter
1012	Central voltage retention device
1015	Stop and Start ECU
1031	Battery charge status unit
1220	Engine coolant temperature sensor
1261	Accelerator pedal position sensor
1310 (*)	Air flow meter
1312 (*)	Inlet air temperature and pressure sensor
1320	Engine ECU
1356	Braking vacuum sensor
1906	Clutch pedal switch (clutched)
1912	Stop and Start switch
2120	Brake dual-function switch
7306	Clutch pedal switch (Released)
7800	ESP ECU
8080	Air conditioning ECU
8235 (*)	Engine starting switch
8238 (*)	Hands-free starting unit
84B3 (*)	Instrument panel dot matrix display

(*) According to version

Description of the exchanges of information			
Connections	Signal	Transmitter/receiver	Nature of signal
1	Information : Main brake switch	2120 / BSI1	By wire
2 (*)	Ignition switch position	CA00 / BSI1	By wire
3 (*)	Engine starting switch information	8238/ BSI1	B CAN
4 (*)	Engine starting switch information	8235 / 8238	By wire
5	Information : Battery charge status	1031 / 1320	By wire
6	Accelerator pedal position information	1261 / 1320	By wire
7	Clutch pedal position information (Released)	7306 / 1320	By wire
8	Clutch pedal position information (clutched)	1906 / 1320	By wire
9	Engine coolant temperature information	1220 / 1320	By wire
10 (*)	Air flow data	1310 / 1320	By wire
11 (*)	Inlet air temperature information	1312 / 1320	By wire
12	Information : Main brake switch	2120 / 1320	By wire
13	Activation control/Deactivation of the Stop and Start function	1912 / 1015	By wire
14	control : Central voltage retention device	1015 / 1012	By wire
15	Information : Status of the central voltage retaining device	1012 / 1015	By wire
16	Heated rear screen activation information	8080 / BSI1	B CAN
	Exterior temperature information		
	Passenger compartment temperature information		
	Air conditioning demand information		
17 (*)	Information : Status of the stop and start function	BSI1 / 84B3	B CAN
18 (*)	Information : Status of the stop and start function	BSI1 / 0004	B CAN
19	Lighting of the warning light : Stop and Start function activation/deactivation switch	0004/ 1912	By wire
20	Vehicle speed information	7800 / 1320	C CAN
		7800 / BSI1	
		7800 / 1012	
21	Information on the braking circuit vacuum	1356 / 1015	By wire
	Information : Status of the stop and start function	1015 / BSI1	
	Information : Main brake switch		
	Heated rear screen activation information		
	Exterior temperature information		

22	Passenger compartment temperature information	BSI1 / 1015	C CAN
	Air conditioning demand information		
	Information : Seat belt buckled		
	Information : Bonnet closed		
	Information : Battery charge status	1320 / 1015	
	Accelerator pedal position information		
	Clutch pedal position information (Released)		
	Clutch pedal position information (clutched)		
	Engine coolant temperature information		
	Information : Intake air pressure (*)		
	Air flow data (*)		
	Information : Particulate filter regeneration (*)		
23	Starter solenoid control	1015 / 1010	By wire
(*) According to version			

FUNCTION : STOP AND START SYSTEM

NOTE : (*) Automatic air conditioning (RFTA)

1 - GLOSSARY

Status	Description
Initial starting	Starting with the key or starter switch (Starting of the engine by the starter motor) (*)
Engine off (Cut-off)	Engine stopped or stalled (an action on the key or starter switch is necessary in order to start the engine) (*)
Engine stopped (STOP)	Engine stopped by the Stop and Start function (a restarting is possible without any action on the key or starter switch) (*)
Restarting of the engine (START)	Restarting of the engine
(*) According to equipment	

2 - STOP AND START FUNCTION

Stop and start function :

- To stop the engine automatically when the vehicle is stationary
- To restart the engine automatically

The stop and start function reduces fuel consumption and polluting emissions.

2 - 1 - Authorisation to stop the engine

User conditions necessary for permitting the automatic stopping of the engine :

- Stop and start function activated
- No pressing of the accelerator pedal
- Gear lever in neutral
- Clutch pedal released
- Driver's seat belt fastened
- Bonnet closed
- Cabin temperature corresponding to the driver's requirement (*)
- No deicing/demisting of the windscreen

NOTE : (*) Automatic air conditioning (RFTA)

Conditions required by the Stop and Start system for permitting automatic stopping of the engine	4A92 engine	4N13 / DV6C engine
Exceeding of 30 seconds after starting by using the key or starter switch	X	X
Exceeding of 10 seconds after an automatic restarting	X	X
Exceeding of a speed of approximately 5 km/h after either a normal or automatic starting	X	X

Engine ECU not detecting any fault in the Stop and Start system	X	X
Stop and Start ECU not detecting any fault in the Stop and Start system	X	X
No regeneration of the particle filter	X	
Pressure in the brake servo greater than 0,26 bar	X	X
Outside temperature higher than around 3 °C	X	X
Electrical consumption less than 50 A	X	X
Discharging of the battery less than 3 Ah	X	X
Coolant temperature of 60°C	X	
Coolant temperature of 50°C		X
Engine coolant temperature lower than or equal to 90°C		X

2 - 2 - Prohibition of stopping of the engine

User conditions necessary for prohibiting the automatic stopping of the engine :

- Stop and start function deactivated
- Accelerator pedal pressed
- Gear lever not in neutral
- Clutch pedal pressed
- Driver's seat belt not fastened
- Bonnet open
- Deicing/demisting of the windscreen
- Cabin temperature not corresponding to the driver's requirement (variation in cabin temperature of ± 3°C relative to the driver's requirement) (*)

Conditions required by the Stop and Start system for prohibiting automatic stopping of the engine	4A92 engine	4N13 / DV6C engine
Not exceeding 30 seconds after the first starting using the key/starter switch	X	X
Not exceeding 10 seconds after an automatic starting	X	X
Vehicle speed lower than 5 km/h after either a normal or automatic starting	X	X
Engine ECU detecting a fault in the Stop and Start system	X	X
Stop and Start ECU detecting a fault in the Stop and Start system	X	X
Regeneration of the particulate emissions filter in progress		X
Pressure in the brake servo less		

than 0,26 bar	X	X
Outside temperature lower than around 3 °C	X	X
Electrical consumption greater than 50 A	X	X
Discharging of the battery greater than 3 Ah	X	X
Inside temperature low (*)	X	X
Temperature adjustment on maximum hot or maximum cold in automatic mode (*)	X	X
Engine coolant temperature lower than 60°C	X	
Engine coolant temperature lower than 50°C		X
Coolant temperature above 90°C		X

NOTE : (*) Automatic air conditioning (RFTA)

2 - 3 - Request for restarting of the engine

User conditions necessary for authorising the automatic restarting of the engine :

- With brake pedal released
- Clutch pedal pressed
- Deactivation of the Stop and Start system by the driver
- Gear lever in neutral
- Deicing/demisting of the windscreen
- Air conditioning request
- Cabin temperature not corresponding to the driver's requirement (variation in cabin temperature of ± 3°C relative to the driver's requirement) (*)

Conditions required by the Stop and Start system for authorising automatic restarting of the engine	4A92 engine	4N13 / DV6C engine
Engine coolant temperature lower than 55°C	X	X
Electrical consumption greater than 50 A	X	X
Discharging of the battery greater than 3 Ah	X	X
Pressure in the brake servo less than 0,26 bar	X	X
Vehicle speed higher than 5 km/h	X	X
Regeneration of the particulate emissions filter in progress		X
Temperature adjustment on maximum hot or on maximum cold in automatic mode (*)	X	X

NOTE : (*) Automatic air conditioning (RFTA)

2 - 4 - Prohibition of restarting of the engine

Conditions prohibiting restarting of the engine :

- Bonnet open
- Driver's seat belt not fastened
- Clutch pedal released

3 - FUNCTION

3 - 1 - Operation of the central voltage retaining device "At rest"

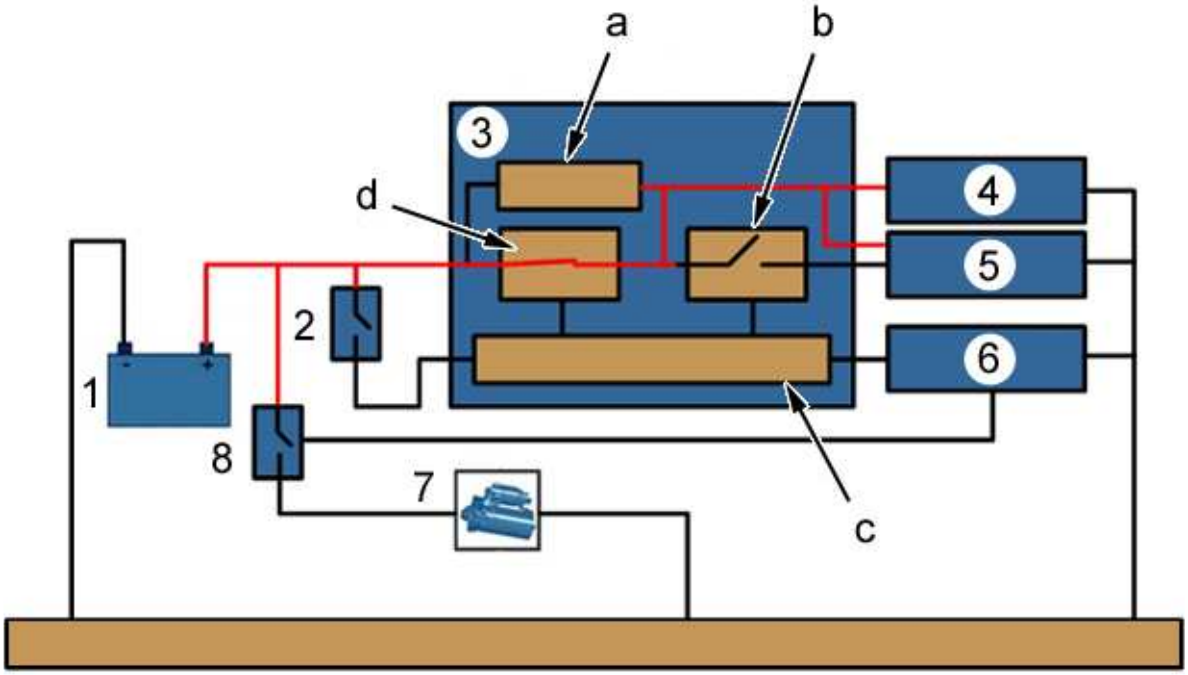

d4ea6a9d

(1) Battery.

(2) Ignition switch.

(3) Central voltage retention device.

(4) Assembly of accessories.

(5) Multifunction screen.

(6) Stop and Start ECU.

(7) Reinforced starter.

(8) Relay (Reinforced starter control).

"a" Turbo section.

"b" Relay (After ignition +).

"c" Control interface.

"d" Turbo relay.

When the ignition is switched off, the voltage entering the central voltage retention device is forwarded to the assembly of accessories (4) and the multifunction screen (5), this requiring a permanent "+".

3 - 2 - Operation of the central voltage retaining device "Reawakened" (Not in automatic starting phase)

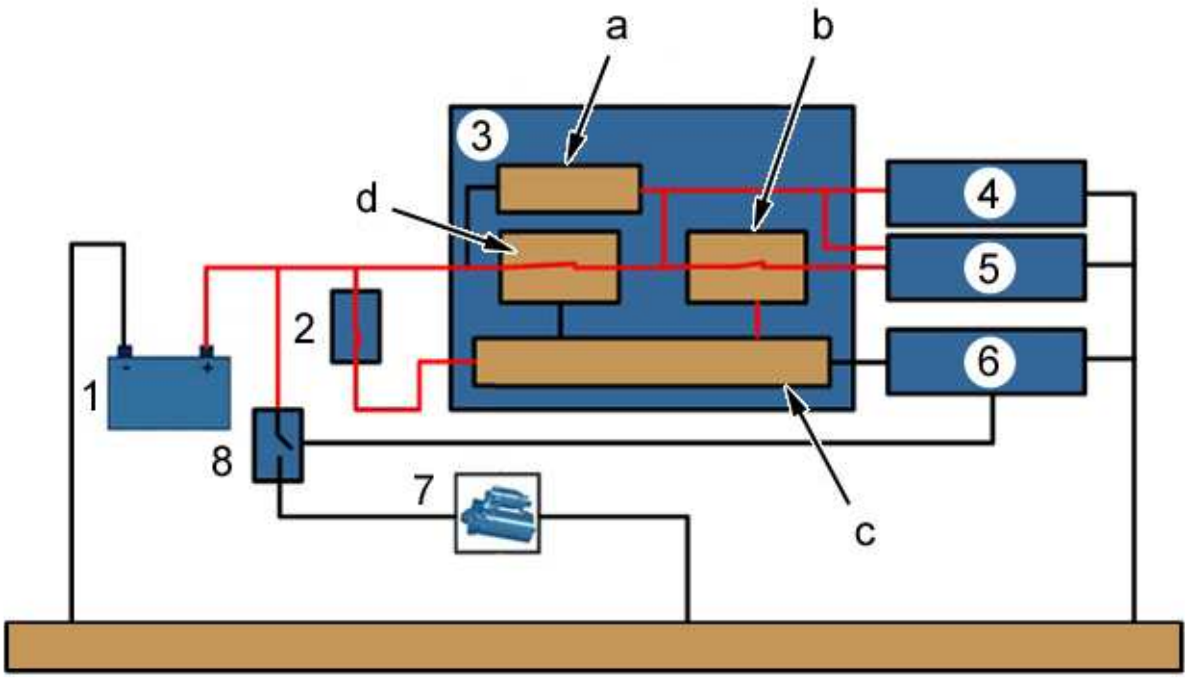

d4ea6aad

(1) Battery.

(2) Positions switch (Ignition positive).

(3) Central voltage retention device.

(4) Assembly of accessories.

(5) Multifunction screen.

(6) Stop and Start ECU.

(7) Reinforced starter.

(8) Relay (Reinforced starter control).

"a" Turbo section.

"b" Relay (After ignition +).

"c" Control interface.

"d" Turbo relay.

During an ignition "+" phase, the control interface "c" actions the ignition "+" relay "b" in order to supply the multifunction screen (5).

3 - 3 - Operation of the central voltage retaining device "Reawakened" (During a starting or an automatic restarting)

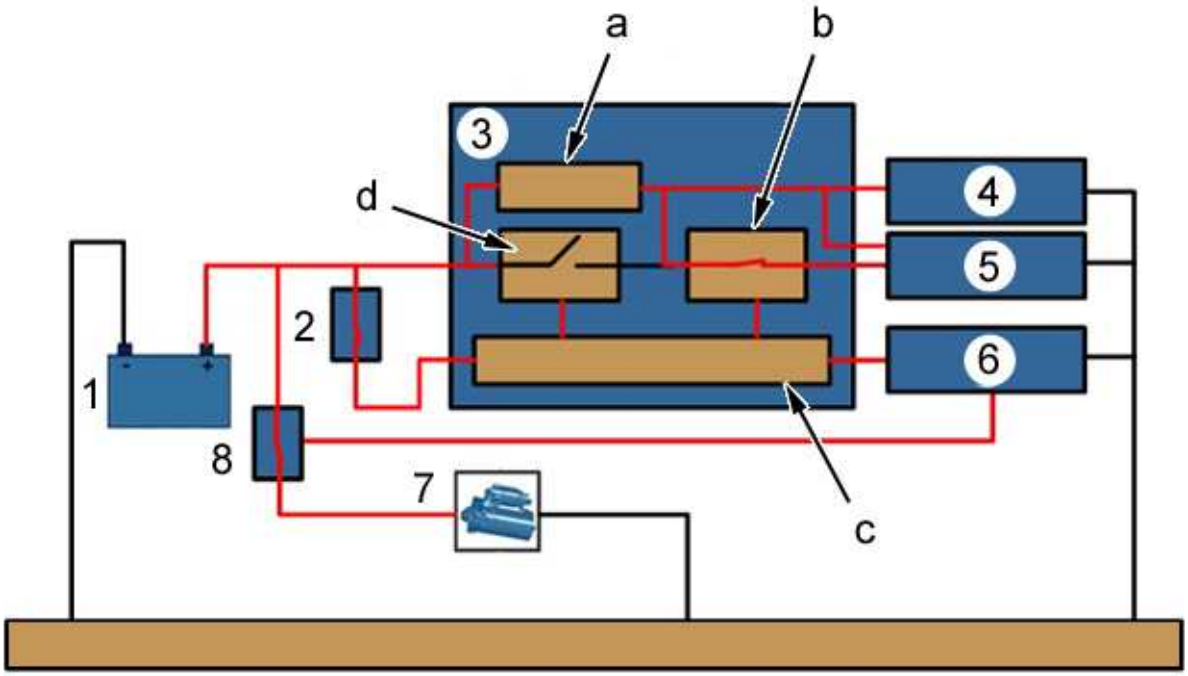

d4ea6abd

(1) Battery.

(2) Ignition switch.

(3) Central voltage retention device.

(4) Assembly of accessories.

(5) Multifunction screen.

(6) Stop and Start ECU.

(7) Reinforced starter.

(8) Relay (Reinforced starter control).

"a" Turbo section.

"b" Relay (After ignition +).

"c" Control interface.

"d" Turbo relay.

During a starting or an automatic restarting, the Stop and Start ECU (6) commands the opening of the turbo relay "d" via the control interface "c".

The voltage entering the device is reduced by the consumption of current of the reinforced starter.

The turbo relay "d" increases the voltage entering the device via the turbo section "a".

TABLE : FAULT CODES - ENGINE DV6C (CONTINENTAL SID807) BRANCH 2

> **WARNING :** A fault code followed by the mention "After-Sales" appears in the case of a problem that is likely to be detected by the customer. These fault codes should be dealt with only if the complaint indicated by the customer corresponds to one of the possible customer complaints associated with the fault code (Refer to the fault codes table to check the faulty component concerned)

Two cases are possible :

- The fault code corresponds to the customer complaint indicated : Deal with fault code
- The fault code does not correspond to the customer complaint indicated : Do not deal with the fault code

> **WARNING :** It is possible for 2 fault codes bearing the same title to be present at the same time : One fault code with the mention "After-Sales" and the other without. These 2 fault codes are recorded from similar strategies. In this case, deal with the fault code that is without the mention "After-Sales"

Fault codes	After sales description of the fault code
P0001	Control of the fuel flow regulator : Open circuit
P0002	Control of the fuel flow regulator : Incoherence of the control current of the flow regulation valve
P0003	Control of the fuel flow regulator : Short circuit to earth
P0004	Control of the fuel flow regulator : Short circuit to positive
P0016	Synchronisation : Incoherence between the information from the engine speed sensor and the camshaft sensor
P0017	Starting monitoring : Synchronisation time too long
P0030	Oxygen sensor heating : Open circuit
P0031	Oxygen sensor heating : Short circuit to earth
P0032	Oxygen sensor heating : Short circuit to positive
P0053	Oxygen sensor heating : Resistance of the oxygen sensor heating circuit outside tolerance, sensor aged
P0069	Coherence fault : At idle, lack of coherence between the manifold inlet pressure measurement and the atmospheric pressure measurement
P0070	Intersystems CAN : Outside temperature value received via the CAN not valid
P0087	Fuel circuit : The pressure measured in the injection rail is less than the setting
P0088	Fuel circuit : Pressure measured in the injection rail above the reference
P0093	Fuel circuit : Incoherence on the fuel pressure with the flow regulator jammed open
P0097	Measurement of the manifold inlet air temperature : Short circuit to earth : Temperature too high
	Measurement of the manifold inlet air temperature :

P0098	Short circuit to positive or open circuit : Temperature too low
P009A	Measurement of the manifold inlet air temperature : Calculation of the ambient air temperature impossible
P0100	Air flow measure : Quantity of air above the maximum threshold
P0102	Air flow measure : Signal incoherent (frequency too low)
P0112	Measurement of the air temperature at the air flow sensor : Short circuit to earth : Temperature too high
P0113	Measurement of the air temperature at the air flow sensor : Short circuit to positive or open circuit : Temperature too low
P0115	Engine water temperature measure : Temperature rise test
P0117	Engine water temperature measure : Short circuit to earth : Value too high
P0118	Engine water temperature measure : Short circuit to positive or open circuit : Value too low
P0130	Measurement of the concentration of oxygen : Open circuit on one of the pins of the sensor (not heating)
P0131	Measurement of the concentration of oxygen : Short circuit to earth
P0132	Measurement of the concentration of oxygen : Short circuit to positive
P0135	Oxygen sensor heating : Estimated temperature too high or too low, sensor heating no longer working
P0182	Fuel temperature measure : Short circuit to earth : Value too high
P0183	Fuel temperature measure : Short circuit to positive or open circuit : Value too low
P0190	Fuel circuit : When stopped, the pressure of the injection rail decreases too slowly
P0191	Measurement of the pressure in the fuel injection rail : Voltage variation outside the tolerance
P0192	Measurement of the pressure in the fuel injection rail : Short circuit to earth : Pressure too low
P0193	Measurement of the pressure in the fuel injection rail : Short circuit to positive : Pressure too high
P0201	Injector 1 signal. : Open circuit
P0202	Injector 2 signal. : Open circuit
P0203	Injector 3 signal. : Open circuit
P0204	Injector 4 signal. : Open circuit
P0215	Main relay control : Poor operation of the relay, the ECU is not being supplied as it should be
P0222	Measurement of the accelerator pedal position : Short circuit to earth on the signal from track 1
P0223	Measurement of the accelerator pedal position : Short-circuit to positive or open circuit on the signal from track 1

P0227	Measurement of the accelerator pedal position : Short circuit to earth on the signal from track 2
P0228	Measurement of the accelerator pedal position : Short-circuit to positive or open circuit on the signal from track 2
P0234	Charge pressure regulation : Air pressure above the reference value
P0237	Measurement of the manifold inlet pressure : Short circuit to earth : Pressure too low
P0238	Measurement of the manifold inlet pressure : Short circuit to positive or open circuit : Pressure too high
P0243	Turbocharger control : Open circuit
P0245	Turbocharger control : Short circuit to earth
P0246	Turbocharger control : Short circuit to positive
P0262	Injector 1 signal. : Short circuit between two wires
P0263	No. 1 cylinder : Injector resetting outside tolerance
P0265	Injector 2 signal. : Short circuit between two wires
P0266	No. 2 cylinder : Injector resetting outside tolerance
P0268	Injector 3 signal. : Short circuit between two wires
P0269	No. 3 cylinder : Injector resetting outside tolerance
P0271	Injector 4 signal. : Short circuit between two wires
P0272	No. 4 cylinder : Injector resetting outside tolerance
P0299	Charge pressure regulation : Air pressure below the reference value
P0335	Engine speed measurement : Loss of signal
P0336	Engine speed measurement : Signal absent when starting
P0337	Engine speed measurement : Signal inconsistent, either too many or not enough teeth seen on one rev
P0339	Engine speed measurement : Sudden increase in the measurement
P0341	Measurement of the camshaft position : Camshaft signal not available
P0342	Measurement of the camshaft position : Loss of camshaft signal while the engine is running
P0343	Camshaft position sensor circuit : Loss of camshaft signal while the engine is running : High status
P0405	Measurement of the position of the EGR valve : Open circuit or short circuit to earth
P0406	Measurement of the position of the EGR valve : Short circuit to positive
P0421	Catalytic converter : Detected absent
P0409	EGR valve : Valve detected jammed closed during the ECU switching to dormant mode phase
P0461	Intersystems CAN : Fuel level information incorrect or absent
P0489	EGR valve : Position incorrect (too open)
P0490	EGR valve : Position incorrect (too closed)
P0493	Fan : Twin speed : Incoherence between the reference

	value (no control) and the status of the fan assembly
P0494	Fan : Twin speed : Incoherence between the reference value (low speed) and the status of the fan assembly
P0495	Fan : Twin speed : Incoherence between the reference value (high speed) and the status of the fan assembly Variable Speed : Short-circuit to earth or to the battery or open circuit on the status of the cooling fan
P0500	Intersystems CAN : Speed information incorrect or absent
P050B	Starting monitoring : Starting time too long
P0516	Battery temperature sensor : Voltage below the minimum threshold
P0517	Battery temperature sensor : Voltage higher than the maximum threshold
P0530	Air conditioning pressure sensor : Short circuit to earth
P0562	Battery voltage measurement : System voltage too low
P0563	Battery voltage measurement : System voltage too high
P0571	Intersystems CAN : Lack of coherence of the brake pedal position sent by the BSI
P0579	Cruise control : Plausibility fault
P0590	Intersystems CAN : Vehicle cruise control fault
P0591	Intersystems CAN : Vehicle cruise control information incorrect
P0606	Computer : Fault internal to "Watchdog" (CMM)
P0615	Starter : Temperature excessive or open circuit on the relay
P0620	Alternator : Alternator electrical fault
P0625	Alternator : Alternator low voltage fault
P0626	Alternator : Alternator high voltage fault
P062B	Downloading / Configuration : Downloading of the resetting of the injectors not carried out
P062D	Injectors control : Injection bank supply voltage outside tolerance
P0630	Downloading / Configuration : VIN numbering fault
P063C	Alternator : Alternator fault
P063D	Alternator : Alternator fault
P0645	A/C compressor engagement actuator : Open circuit
P0646	A/C compressor engagement actuator : Voltage too low
P0647	A/C compressor engagement actuator : Voltage too high
P0658	5V sensors supply n°1 (Air conditioning pressure sensor, Rail pressure sensor, EGR valve position sensor, Variable geometry turbocharger position sensor, Air mixer position sensor, Turbocharging pressure sensor, Particle emission filter differential pressure sensor, EGR exchanger bypass position sensor) : Voltage too low
P0659	5V sensor supply no. 1 (Air conditioning pressure sensor ; Rail pressure sensor ; EGR valve position sensor ; Variable geometry turbo position sensor ; Air

	mixer position sensor ; Supercharging pressure sensor ; Particle filter differential pressure sensor ; EGR exchanger bypass position sensor) : Voltage too high
P065A	Alternator : Alternator mechanical fault
P065A	Alternator : Alternator fault
P0667	ECU internal temperature measurement : Voltage variation outside the tolerance
P0668	ECU internal temperature measurement : Short circuit to earth
P0669	ECU internal temperature measurement : Short circuit to positive
P0691	electric cooling fan unit: Short-circuit to earth or open circuit on the control of cooling fan 1
P0692	electric cooling fan unit: Short-circuit to positive on the control of cooling fan 1
P0693	electric cooling fan unit: Short-circuit to earth or open circuit on the control of cooling fan 2
P0694	electric cooling fan unit: Short-circuit to positive on the control of cooling fan 2
P0703	Measurement of the brake pedal position : Incoherence between the two brake sensors detected under acceleration
P0704	Measurement of the clutch pedal position : Absence of pedal presses on a great variation of speed
P0812	Intersystems CAN : The engine receives the information that reverse gear is engaged even though that is not possible
P0831	Measurement of the clutch pedal position : No pressing of the pedal while driving for a certain time
P0A1A	Alternator : Alternator communication fault
P0A3B	Alternator : Alternator temperature fault
P0A88	Battery : Voltage of the system below the minimum threshold
P0A89	Battery : Voltage of the system above the maximum threshold
P1114	Computer : Stopping of the engine by injection cut-off fault
P1162	EGR valve : Valve detected as being jammed open during the ECU sleep phase
P1166	Fuel circuit : Maximum rail pressure exceeded
P1176	Fuel circuit : Pressure measured in the injection rail higher than the reference with the flow regulator stuck (Anti-sticking test)
P1192	Computer : Stopping of the engine by high pressure pump supply cut-off fault
P1199	Fuel circuit : Incoherence on the reserve fuel pressure (Nearing no fuel)
P11AA	Air circuit : Maximum turbo pressure exceeded
P11AB	Air circuit : Turbocharging pressure below the maximum

	threshold
P11B5	Fuel pressure regulator : Fuel pressure regulator
P1294	Fuel circuit : Critical maximum rail pressure exceeded at certain points
P12A1	No. 1 cylinder : Injector injects too much or remains jammed in the open position
P12A2	No. 1 cylinder : Injector not injecting enough, or poor cylinder compression
P12A4	No. 2 cylinder : Injector injects too much or remains jammed in the open position
P12A5	No. 2 cylinder : Injector not injecting enough, or poor cylinder compression
P12A7	No. 3 cylinder : Injector injects too much or remains jammed in the open position
P12A8	No. 3 cylinder : Injector not injecting enough, or poor cylinder compression
P12AA	No. 4 cylinder : Injector injects too much or remains jammed in the open position
P12AB	No. 4 cylinder : Injector not injecting enough, or poor cylinder compression
P12B3	EGR valve : Position incorrect (too open) (Service)
P12B4	EGR valve : Position incorrect (too closed) (Service)
P1349	Engine preheating : Short circuit to positive or open circuit on the relay control
P1350	Engine preheating : Short circuit to earth on the relay control
P1352	Engine preheating : Fault on the pre-heating relay or glow plugs
P1412	Particle filter : Engine reconfiguration activated following an electrical fault of the measurement of the differential pressure sensor or of the measurement of the particle emission filter temperature
P1442	Control of the additive pump by wire : Open circuit
P1443	Control of the additive pump by wire : Short circuit to earth
P1444	Control of the additive pump by wire : Short circuit to positive
P1445	Additive adding : The quantity of additive injected into the particulate emission filter has exceeded the maximum threshold The particulate emission filter must be changed
P1446	Additive adding : Calculated additive level below the critical threshold
P1457	Particle filter : Detected absent
P1459	EGR valve : Blocked pipe detected
P1490	Particle filter : Detected overloaded
P1496	turbocharger : Position incorrect in relation to the setting, too much turbo (Service)

P1497	turbocharger : Position incorrect relative to requirement, not enough turbo (Service)
P1498	Air mixer : Position incorrect (too closed) (Service)
P1499	Air mixer : Position incorrect (too open) (Service)
P14A7	EGR valve : Failure of the first programming operations
P14A9	Turbo actuator : Failure of the first initialisation
P14AA	Air mixer : Failure of the first programming operations
P1505	Intersystem CAN network : Collision information received by the engine ECU faulty
P150A	Starting monitoring : Key info plausibility fault
P151A	Starting monitoring : The time for unlocking the immobiliser is too long
P1536	Measurement of the brake pedal position : Lack of coherence between the two brake sensors detected on deceleration
P15B3	Additive adding : Additive level calculated lower than the minimum threshold
P160A	Downloading / Configuration : Homologation no. configuration fault
P1612	Computer : EEPROM internal fault (Coded anti-start)
P1613	Downloading / Configuration : Downloading fault of the configuration of the ECU
P1621	Computer : Software redundancy fault at the injection (trim level 2)
P1631	Computer : Internal fault (Injection with the foot lifted)
P1641	Computer : Failure of the initialisation of the injector bank, or harness fault
P1655	Engine running information : Short circuit to positive
P1656	Engine running information : Short circuit to positive
P1657	Engine running information : Open circuit
P1695	Controlled engine start and stop : Motor jammed
P1696	Controlled engine start and stop : Simultaneous starting and stopping request
P16A0	engine: Detection of runaway caused by oil ingestion after stalling
P16C5	Intersystems CAN : Button press filtering problem
P16C7	Intersystems CAN : Incorrect configuration of the vehicle concerning the speed limiter and the gearbox
P2031	Particle emission filter upstream temperature measurement : Plausibility when starting
P2032	Particle emission filter upstream temperature measurement : Short circuit to earth
P2033	Particle emission filter upstream temperature measurement : Short circuit to positive
P2101	Control of the air mixer : Overheating or excess current
P2102	Control of the air mixer : Electrical fault
P2127	Measurement of the air mixer position : Short circuit to earth
P2128	Measurement of the air mixer position : Short circuit to

	positive or open circuit
P2137	Measurement of the accelerator pedal position : Incoherence of the accelerator pedal tracks
P2144	Control of the EGR valve : Electrical fault
P2146	Control of injectors : Injection bank 1 : Short circuit
P2148	Injectors control : Injection bank 1 : Voltage too high
P2173	Air mixer : Position incorrect (too open)
P2175	Air mixer : Position incorrect (too closed)
P2187	Mixture of the system : Concentration of oxygen too high
P2188	Mixture of the system : Concentration of oxygen too low
P2227	Measurement of the atmospheric pressure : Voltage variation outside the tolerance
P2228	Measurement of the atmospheric pressure : Value too low
P2229	Measurement of the atmospheric pressure : Value too high
P2244	Mixture of the system : Integrated slave circuit of the sensor faulty
P2265	Water in diesel sensor : Open circuit or short circuit to the plus
P2291	Starting monitoring : Pressure increase in the injection rail too slow when starting
P2297	Oxygen sensor heating : Oxygen concentration not plausible when the pedal is released
P2299	Measurement of the accelerator pedal position : Pedal jammed or applied at the same time as the brake pedal
P2413	Control of the EGR valve : Overheating or excess current
P2425	Control of the Bypass of the EGR exchanger : Open circuit
P2426	Control of the Bypass of the EGR exchanger : Short circuit to earth
P2427	Control of the Bypass of the EGR exchanger : Short circuit to positive
P242F	Particle filter : Detected clogged
P2452	Measurement of the particle emission filter differential pressure : Plausibility before starting fault
P2454	Measurement of the particle emission filter differential pressure : Voltage too low
P2455	Measurement of the particle emission filter differential pressure : Voltage too high
P2562	turbocharger : Position incorrect relative to requirement, not enough turbo
P2563	turbocharger : Position incorrect in relation to the setting, too much turbo
P2564	Variable geometry turbocharger position measurement : Short circuit to earth
P2565	Measurement of the position of the turbocharger : Short circuit to positive or open circuit
P2670	Supply of sensors 5V no. 2 (Accelerator pedal sensor) :

	Voltage too low
P2671	Supply of sensors 5V no. 2 (Accelerator pedal sensor) : Voltage too high
P2685	Supply of sensors 5V no. 3 (Engine speed sensor ; Camshaft sensor) : Voltage too low
P2686	Supply of sensors 5V no. 3 (Engine speed sensor ; Camshaft sensor) : Voltage too high
P3007	Air circuit : Air flow lower than recommended
P3008	Air circuit : Air flow higher than recommended
P3026	Air circuit : Air flow higher than recommended (Service)
P3027	Air circuit : Air flow lower than recommended (Service)
U0073	Intersystems CAN : CAN in error
U0121	Intersystems CAN : Absence of communication with the ABS/ESP ECU
U0140	Intersystems CAN : Absence of communication with the BSI ECU
U0315	Intersystems CAN : Error in length or prohibited value on the ABS/ESP datastream
U0322	Intersystems CAN : Error in length or prohibited value on the BSI datastream
U1000	Computer : The engine ECU is detected mute by one of the ECUs on the network
U1113	Intersystems CAN : Absence of communication with the ABS/ESP ECU
U1118	Intersystems CAN : Absence of communication with the BSI ECU
U1121	Intersystems CAN : Absence of communication with the electric power steering ECU
U1133	LIN : The reversible alternator is confirmed absent
U1138	Intersystems CAN : Absence of communication with the controlled clutch ECU
U1218	Intersystems CAN : One of the parameters present in a datastream sent by the BSI is invalid
U1221	Intersystems CAN : Prohibited value of the electric power steering datastream
U1309	Intersystems CAN : Length or prohibited value error of the frame BV
U1313	Intersystems CAN : Error in length or prohibited value on the ABS/ESP datastream
U1318	Intersystems CAN : Error in length or prohibited value on the BSI datastream
U1321	Intersystems CAN : Error of length or prohibited value of the datastream transmitted by the electric power steering ECU
U1333	LIN : Error in length or prohibited value of the data from the voltage retention device
U1338	Intersystems CAN : Error of length or prohibited value of the datastream transmitted by the controlled clutch ECU
U1400	Alternator LIN network : Registering of a fault on the LIN

	network
U1401	Alternator LIN network : Recording of a fault on the slave node of the Alternator LIN

TABLE : FAULT CODES - STOP AND START ECU

Fault codes	After sales description of the fault code
B1301	CC/CC converter circuit : Electrical fault
B1302	CC/CC converter : Electrical fault
C0047	Brake vacuum sensor circuit : Electrical fault
C1101	Atmospheric pressure sensor circuit : Electrical fault
P0421	Catalytic converter : Detected absent
P081D	Circuit of the neutral position switch : No variations in the signal
P0830	Circuit of the clutch pedal upper switch : No variations in the signal
P0833	Circuit of the clutch pedal lower switch : No variations in the signal
P1459	EGR valve : Blocked pipe detected
U0001	Intersystem CAN network : Bus out of action
U0100	Intersystem CAN network : Timing of the engine ECU
U010F	No communication with the air conditioning ECU : Not characterised
U0121	Intersystem CAN network : Timing of the ABS/ESP ECU
U0141	Intersystem CAN network : Timing of the BSI
U1180	Intersystem CAN network : Timing of the instrument panel
U1201	Intersystem CAN network : Error in the vehicle speed signal

HELP IN DIAGNOSIS : THE ENGINE HAS STALLED - ENGINE DV6C (CONTINENTAL SID 807) BRANCH 2

1 - PRESENTATION : DOCUMENT

This document groups together the main diagnostic information for the vehicle concerned and supplements the diagnostic procedures in the diagnostic equipment.

2 - INSTRUCTIONS

General procedure for using the diagnostic assistance document and the diagnostic tool.

3 - GENERAL

Flow chart : Hdi direct injection system CONTINENTAL SID 807 (engine DV6C).

Operating methods : Hdi direct injection system CONTINENTAL SID 807 (engine DV6C).

4 - SPECIAL OPERATING FEATURES

> **WARNING :** On vehicles with hands-free access and starting, put the "hands-free" remote control in the electronic key reader so that all the operations and diagnostic services of the engine management ECU are functional

5 - PRELIMINARY CHECKS

Check the battery voltage.

Visually check the condition of the battery.

Check the connections of the battery.

6 - PROCEDURE BY FAULT CODES

The fault code tables contain all the fault codes relating the system.

6 - 1 - Table : Fault codes - Engine DV6C (CONTINENTAL SID 807) branch 2

> **WARNING :** A fault code followed by the mention "After-Sales" appears in the case of a problem that is likely to be detected by the customer. These fault codes should be dealt with only if the complaint indicated by the customer corresponds to one of the possible customer complaints associated with the fault code (Refer to the fault codes table to check the faulty component concerned)

Two cases are possible :

- The fault code corresponds to the customer complaint indicated : Deal with fault code

- The fault code does not correspond to the customer complaint indicated : Do not deal with the fault code

> **WARNING :** It is possible for 2 fault codes bearing the same title to be present at the same time : One fault code with the mention "After-Sales" and the other without. These 2 fault codes are recorded from similar strategies. In this case, deal with the fault code that is without the mention "After-Sales"

Fault codes	After sales description of the fault code	Rectificatio priority
P0001	Control of the fuel flow regulator : Open circuit	1
P0002	Control of the fuel flow regulator : Incoherence of the control current of the flow regulation valve	1
P0003	Control of the fuel flow regulator : Short circuit to earth	1
P0004	Control of the fuel flow regulator : Short circuit to positive	1
P0069	Coherence fault : At idle, lack of coherence between the manifold inlet pressure measurement and the atmospheric pressure measurement	3
P0070	Intersystem CAN network : Outside temperature value received via the CAN not valid	1
P0087	Fuel circuit : The pressure measured in the injection rail is less than the setting	1
P0088	Fuel circuit : Pressure measured in the injection rail above the reference	3
P0093	Fuel circuit : Incoherence on the fuel pressure with the flow regulator jammed open	3
P0100	Air flow measure : Quantity of air above the maximum threshold	3
P0117	Engine water temperature measure : Short circuit to earth : Value too high	1
P0118	Engine water temperature measure : Short circuit to positive or open circuit : Value too low	1
P0182	Fuel temperature measure : Short circuit to earth : Value too high	1
P0183	Fuel temperature measure : Short circuit to positive or open circuit : Value too low	1
P0190	Fuel circuit : When stopped, the pressure of the injection rail decreases too slowly	3
P0191	Measurement of the pressure in the fuel injection rail : Voltage variation outside the tolerance	3
P0192	Measurement of the pressure in the fuel injection rail : Short circuit to earth : Pressure too low	1
P0193	Measurement of the pressure in the fuel injection rail : Short circuit to positive : Pressure too high	1
P0201	Injector 1 signal. : Open circuit	1
P0202	Injector 2 signal. : Open circuit	1
P0203	Injector 3 signal. : Open circuit	1

P0204	Injector 4 signal. : Open circuit	1
P0234	Charge pressure regulation : Air pressure above the reference value	2
P0237	Measurement of the manifold inlet pressure : Short circuit to earth : Pressure too low	1
P0238	Measurement of the manifold inlet pressure : Short circuit to positive or open circuit : Pressure too high	1
P0262	Injector 1 signal. : Short circuit between two wires	1
P0263	No. 1 cylinder : Injector resetting outside tolerance	3
P0265	Injector 2 signal. : Short circuit between two wires	1
P0266	No. 2 cylinder : Injector resetting outside tolerance	3
P0268	Injector 3 signal. : Short circuit between two wires	1
P0269	No. 3 cylinder : Injector resetting outside tolerance	3
P0271	Injector 4 signal. : Short circuit between two wires	1
P0272	No. 4 cylinder : Injector resetting outside tolerance	3
P0299	Charge pressure regulation : Air pressure below the reference value	2
P0335	Engine speed measurement : Loss of signal	1
P0336	Engine speed measurement : Signal absent when starting	1
P0337	Engine speed measurement : Signal inconsistent, either too many or not enough teeth seen on one rev	1
P0339	Engine speed measurement : Sudden increase in the measurement	1
P0406	Measurement of the position of the EGR valve : Short circuit to positive	1
P0409	EGR valve : Valve detected jammed closed during the ECU switching to dormant mode phase	2
P0421	Catalytic converter : Detected absent	-
P0489	EGR valve : Position incorrect (too open)	2
P0490	EGR valve : Position incorrect (too closed)	2
P0500	Intersystem CAN network : Speed information incorrect or absent	1
P0516	Battery temperature sensor : Voltage below the minimum threshold	1
P0517	Battery temperature sensor : Voltage higher than the maximum threshold	1
P0562	Battery voltage measurement : System voltage too low	1
P0563	Battery voltage measurement : System voltage too high	1
P0606	Computer : Fault internal to "Watchdog" (CMM)	1
P0620	Alternator : Alternator electrical fault	1
P0625	Alternator : Alternator low voltage fault	1
P0626	Alternator : Alternator high voltage fault	1
P062B	Downloading / Configuration : Downloading of the resetting of the injectors not carried out	1
P062D	Injectors control : Injection bank supply voltage outside tolerance	1
P0630	Downloading / Configuration : VIN numbering fault	1
	5V sensors supply n°1 (Air conditioning pressure	

P0658	sensor, Rail pressure sensor, EGR valve position sensor, Variable geometry turbocharger position sensor, Air mixer position sensor, Turbocharging pressure sensor, Particle emission filter differential pressure sensor, EGR exchanger bypass position sensor) : Voltage too low	1
P0659	5V sensor supply no. 1 (Air conditioning pressure sensor ; Rail pressure sensor ; EGR valve position sensor ; Variable geometry turbo position sensor ; Air mixer position sensor ; Supercharging pressure sensor ; Particle filter differential pressure sensor ; EGR exchanger bypass position sensor) : Voltage too high	1
P065A	Alternator : Alternator mechanical fault	1
P0667	ECU internal temperature measurement : Voltage variation outside the tolerance	1
P0668	ECU internal temperature measurement : Short circuit to earth	1
P0669	ECU internal temperature measurement : Short circuit to positive	1
P0703	Measurement of the brake pedal position : Incoherence between the two brake sensors detected under acceleration	3
P0704	Measurement of the clutch pedal position : Absence of pedal presses on a great variation of speed	3
P0831	Measurement of the clutch pedal position : No pressing of the pedal while driving for a certain time	3
P0A1A	Alternator : Alternator communication fault	1
P0A3B	Alternator : Alternator temperature fault	1
P0A88	Battery : Voltage of the system below the minimum threshold	1
P0A89	Battery : Voltage of the system above the maximum threshold	1
P1114	Computer : Stopping of the engine by injection cut-off fault	3
P1162	EGR valve : Valve detected as being jammed open during the ECU sleep phase	2
P1166	Fuel circuit : Maximum rail pressure exceeded	3
P1176	Fuel circuit : Pressure measured in the injection rail higher than the reference with the flow regulator stuck (Anti-sticking test)	3
P1192	Computer : Stopping of the engine by high pressure pump supply cut-off fault	3
P1199	Fuel circuit : Incoherence on the reserve fuel pressure (Nearing no fuel)	3
P1294	Fuel circuit : Critical maximum rail pressure exceeded at certain points	3
P12A1	No. 1 cylinder : Injector injects too much or remains jammed in the open position	3
	No. 1 cylinder : Injector not injecting enough, or poor	

P12A2	cylinder compression	3
P12A4	No. 2 cylinder : Injector injects too much or remains jammed in the open position	3
P12A5	No. 2 cylinder : Injector not injecting enough, or poor cylinder compression	3
P12A7	No. 3 cylinder : Injector injects too much or remains jammed in the open position	3
P12A8	No. 3 cylinder : Injector not injecting enough, or poor cylinder compression	3
P12AA	No. 4 cylinder : Injector injects too much or remains jammed in the open position	3
P12AB	No. 4 cylinder : Injector not injecting enough, or poor cylinder compression	3
P12B3	EGR valve : Position incorrect (Too open) (Service)	4
P12B4	EGR valve : Position incorrect (Too closed) (Service)	4
P1349	Engine preheating : Short circuit to positive or open circuit on the relay control	1
P1350	Engine preheating : Short circuit to earth on the relay control	1
P1352	Engine preheating : Fault on the pre-heating relay or glow plugs	1
P1459	EGR valve : Blocked pipe detected	-
P1490	Particle filter : Detected overloaded	3
P1498	Air mixer : Position incorrect (Too closed) (Service)	4
P1499	Air mixer : Position incorrect (Too open) (Service)	4
P14AA	Air mixer : Failure of the first programming operations	2
P160A	Downloading / Configuration : Homologation no. configuration fault	1
P1613	Downloading / Configuration : Downloading fault of the configuration of the ECU	1
P1621	Computer : Software redundancy fault at the injection (Level 2)	1
P1631	Computer : Internal fault (injection with no load)	1
P1641	Computer : Failure of the initialisation of the injector bank, or harness fault	1
P1696	Controlled engine start and stop : Simultaneous starting and stopping request	1
P16A0	engine : Detection of runaway caused by oil ingestion after stalling	3
P2146	Control of injectors : Injection bank 1 : Short circuit	1
P2148	Injectors control : Injection bank 1 : Voltage too high	1
P2175	Air mixer : Position incorrect (too closed)	2
P2227	Measurement of the atmospheric pressure : Voltage variation outside the tolerance	1
P2228	Measurement of the atmospheric pressure : Value too low	1
P2229	Measurement of the atmospheric pressure : Value too high	1
P2265	Water in diesel sensor : Open circuit or short circuit to	1

	the plus	
P2291	Starting monitoring : Pressure increase in the injection rail too slow when starting	3
P2299	Measurement of the accelerator pedal position : Pedal jammed or applied at the same time as the brake pedal	3
P2413	Control of the EGR valve : Overheating or excess current	1
P242F	Particle filter : Detected clogged	3
P2685	5V sensor supply no. 3 (Engine speed sensor ; Camshaft sensor) : Voltage too low	1
P2686	5V sensor supply no. 3 (Engine speed sensor ; Camshaft sensor) :Voltage too high	1
P3007	Air circuit : Air flow lower than recommended	3
P3008	Air circuit : Air flow higher than recommended	3
P3026	Air circuit : Air flow higher than recommended (Service)	4
P3027	Air circuit : Air flow lower than recommended (Service)	4
U0073	Intersystem CAN network : CAN in error	1
U0121	Intersystem CAN network : Absence of communication with the ABS/ESP ECU	1
U0140	Intersystem CAN network : Absence of communication with the BSI ECU	1
U0315	Intersystem CAN network : Error in length or prohibited value on the ABS/ESP datastream	1
U0322	Intersystem CAN network : Error in length or prohibited value on the BSI datastream	1
U1000	Computer : The engine ECU is detected mute by one of the ECUs on the network	1
U1113	Intersystem CAN network : Absence of communication with the ABS/ESP ECU	1
U1118	Intersystem CAN network : Absence of communication with the BSI ECU	1
U1121	Intersystem CAN network : Absence of communication with the electric power steering ECU	1
U1133	LIN : The reversible alternator is confirmed absent	1
U1138	Intersystem CAN network : Absence of communication with the controlled clutch ECU	1
U1218	Intersystem CAN network : One of the parameters present in a datastream sent by the BSI is invalid	1
U1221	Intersystem CAN network : Prohibited value of the electric power steering datastream	1
U1313	Intersystem CAN network : Error in length or prohibited value on the ABS/ESP datastream	1
U1318	Intersystem CAN network : Error in length or prohibited value on the BSI datastream	1
U1321	Intersystem CAN network : Error of length or prohibited value of the datastream transmitted by the electric power steering ECU	1
U1333	LIN : Error in length or prohibited value of the data from the voltage retention device	1

U1338	Intersystem CAN network : Error of length or prohibited value of the datastream transmitted by the controlled clutch ECU	1
U1400	Alternator LIN network : Registering of a fault on the LIN network	1
U1401	Alternator LIN network : Recording of a fault on the slave node of the Alternator LIN	1

6 - 2 - Table : Fault codes - Automatic gearbox ECU

Deal with the fault codes present in expert mode.

6 - 3 - Table : Fault codes - Controlled manual gearbox ECU

Deal with the fault codes present in expert mode.

7 - PROCEDURE BY SYMPTOMS

The procedure using customer symptoms applies only to cases without fault codes that relate to the given symptom.

The table below lists, by function and by sub-function, the areas/components where this symptom can arise.

Function	Sub function of the system	Suspect areas
Fuel supply system	Fuel system	Fuel
		Fuel filter
		Fuel pipe
		high pressure fuel pump
		Fuel flow regulation valve
		Fuel temperature sensor
		Fuel high pressure common injection rail
		Fuel high pressure sensor
		High pressure pipes
		Injectors
Fuel additive circuit	Fuel additive circuit	additive
		Additive pump
		Hoses
Air circuit	Induction circuit	Air cleaner
		Air inlet line
		Air flow meter
		turbocharger
		Turbo air cooler by-pass unit
		Air mixer
		Turbocharging air pressure sensor
	exhaust gas recirculation system (BITRON system)	Exhaust gas recycling valve
		Exhaust gas recirculation heat exchanger
		Exhaust gas recirculation line
		vacuum pump

	Vacuum circuit	Pipes
		Control electrovalve for the EGR heat exchanger by-pass
		Turbocharger solenoid valve
	Exhaust and particle filtration circuit	catalytic converter
		Particle filter upstream temperature sensor
		Particle filter
		Particle filter differential pressure sensor
Other constitutive elements	Engine cooling	engine coolant temperature sensor
		Coolant pump
		Coolant circuit
	Pre-post heating system (thermostarter)	Pre-post heater plugs
		Pre-post heating relay
	Lubrication system	oil
		oil pump
		Oil separator
	-	Ancillary drive belt
		atmospheric pressure sensor
		Engine ECU
		Accelerator pedal position sensor
		Mats
		Earth cables attached to the bodywork

8 - CHECK AFTER OPERATION

Put the vehicle under the conditions of appearance as described in the customer complaint, so as to check and confirm that the customer complaint has disappeared.

Methodology :

- Use the information linked to the fault code diagnosed, from the chapter "Table : fault codes"
- Use the information on the conditions of appearance described by the customer to achieve a diagnosis by symptom

INSTRUCTIONS : DIAGNOSTIC ASSISTANCE DOCUMENT

Aid to diagnosis can be used in the following modes :

- "diagnostic mode" as an addition to the diagnostic methods that are available in the diagnostic tool
- "expert mode" as an addition to the functions made available in the diagnostic tool

Once you are familiar with the customer complaint, keep to the sequence of the following stages in the repair diagnosis process.

1 - TAKING ACCOUNT OF THE CUSTOMER COMPLAINT

Be aware of the customer complaint and of the conditions of appearance as described on reception of the vehicle.

Reproduce the customer complaint.

2 - DIAGNOSTIC

When using the diagnostic tool to access diagnosis (including aid to diagnosis and methods) :

- Select : Power unit
- Select : Engine

2 - 1 - Pre-diagnosis

Consult the aid to diagnosis to arrive at the prediagnosis.

Methodology :

- Refer to chapter : Special operating features (*)
- Read the operating principles of the system in this chapter : General
- Carry out the operations described in the chapter : Preliminary checks

(*) The user may perceive certain operating features as malfunctions. The operating features correspond to normal operation and are in conformity with the vehicle specification. The list of operating features may vary depending on the vehicle's trim level.

2 - 2 - Straight to the point

Check whether the customer complaint flagged up can be resolved with the aid of a "straight to the point".

2 - 3 - Procedure by fault codes

The aid to diagnosis lists all the fault codes that relate to the customer complaint.

Consult the chapter : Table of fault codes.

Methodology :

- Consult the information relating to the fault codes
- If there are multiple fault codes, deal with them in the order of priority defined in the aid to diagnosis, indexing the lowest in priority
- Select the method by fault codes from the diagnostic tool

2 - 4 - Procedure by symptoms

> **WARNING :** Apply the procedure by fault codes and then the procedure by symptoms

The aid to diagnosis lists by symptoms all the suspect areas that relate to the customer complaint.

Consult the chapter : Procedure by symptoms.

Methodology :

- Look for the information that relates to the symptom
- Select the method by symptom from the diagnostic tool (in the absence of a fault code or if the method by fault codes is not successful)

2 - 5 - Expert mode

If it is not possible to demonstrate the part that is faulty using a method :

- In the aid to diagnosis, look for the information relating to the customer complaint and linked to the fault codes in the chapter "Method by fault codes" and/or linked to the symptoms in the chapter "Method by symptoms"
- If necessary use the functions made available in the diagnostic tool (Reading of fault codes, Parameter measures and Actuator tests)

3 - REPAIR

Repair the vehicle. (Repair or replacement of the faulty component).

4 - CHECK : AFTER REPAIR

Carry out the operations described in the chapter : Checks after repair.

Put the vehicle under the conditions of appearance as described in the customer complaint, so as to check and confirm that the customer complaint has disappeared.

Methodology :

- Use the information linked to the fault code diagnosed, from the chapter "Table : fault codes"
- Use the information on the conditions of appearance described by the customer to achieve a diagnosis by symptom
- Perform any additional checks as required by the Aid to Diagnosis so as to prevent the

causes from recurring, depending on the origin of the problem or on the repairs done on the vehicle

FLOW CHART : HDI DIRECT INJECTION SYSTEM CONTINENTAL SID 807 (ENGINE DV6C)

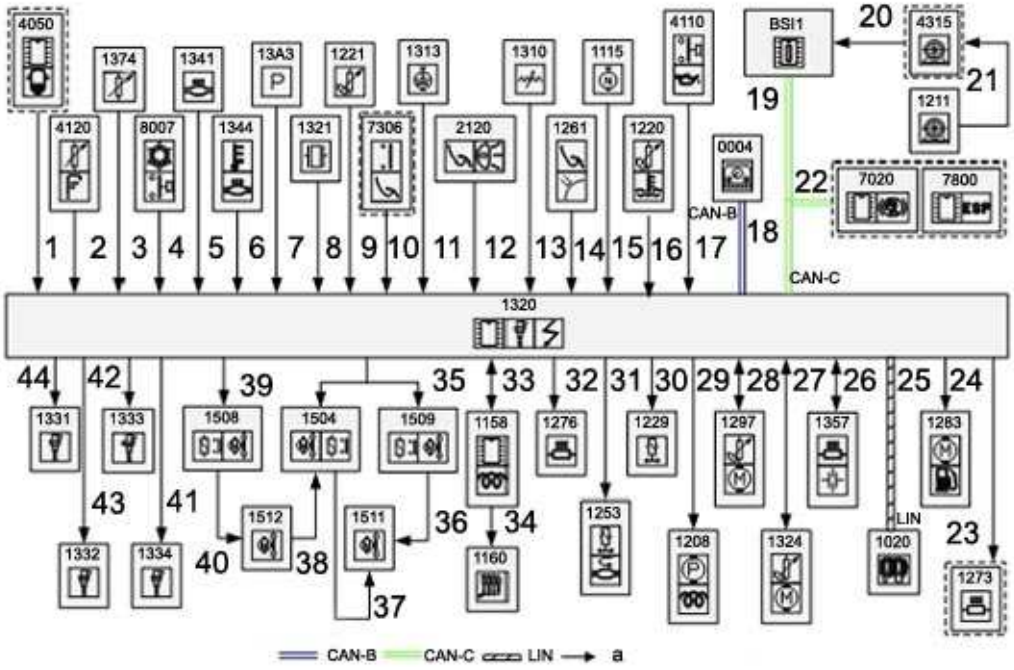

d4ea6rhd

Key : "a" Wire connection.

Components description table	
element	Designation
BSI1	Built-in systems interface
0004	Instrument panel
1020	Alternator
1115	Cylinder reference sensor
1158	Pre-post heating control unit
1160	Pre-heater plugs
1208	diesel injection pump
1211	Fuel gauge pump
1220	Coolant temperature sensor
1221	Diesel fuel thermal sensor
1229	Variable geometry turbocharger pressure regulation solenoid valve
1253	Exhaust gas recirculation (EGR) wired solenoid valve
1261	Accelerator pedal position sensor
1273 (*)	Oil breather re-heat resistor 1
1276	Diesel fuel heater
1283	Fuel additive pump
1297	Electrically-controlled exhaust gas recycling valve
13A3	Inlet air temperature and pressure sensor
1310	Air flowmeter
1313	Engine speed sensor
1320	Engine ECU

1321	Diesel high pressure sensor
1324	Electric mixer with turbocharging air cooler position repeat
1331	Diesel injector - Cylinder No. 1
1332	Diesel injector - Cylinder No. 2
1333	Diesel injector - Cylinder No. 3
1334	Diesel injector - Cylinder No. 4
1341	Particle filter differential pressure sensor
1344	Upstream exhaust gas high temperature sensor
1357	Proportional oxygen sensor
1374	Position repeat sensor for the control diaphragm of the dump valve
1504	Left-hand and right-hand fans serial supply relay
1508	Cooling fan slow speed supply relay
1509	Cooling fan fast speed supply relay
1511	Right-hand fan
1512	Left-hand fan
2120	Brake twin function switch
4050 (*)	Water in fuel sensor
4110	Engine oil pressure switch
4120	Engine oil level sensor
4315 (*)	Fuel gauge
7020 (*)	ABS ECU
7306 (*)	Cruise control safety switch (clutch)
7800 (*)	ESP ECU
8007	Air conditioning pressure switch
(*) According to version	

Description of the exchanges of information			
Connection number	signal	Transmitter / Receiver	Nature of signal
1 (*)	Information on presence of water in the diesel fuel	4050 / 1320	By wire
2	Engine oil level information	4120 / 1320	By wire
3	Dump valve position repeat information	1374 / 1320	By wire
4	Refrigerant pressure information	8007 / 1320	By wire
5	Particle emission filter clogging level information	1341 / 1320	By wire
6	Exhaust gas temperature information	1344 / 1320	By wire
7	Engine intake inlet air temperature information	13A3 / 1320	By wire
	Engine intake inlet air pressure information		
8	Information on the diesel fuel high pressure (Fuel high pressure common injection rail)	1321 / 1320	By wire
9	Diesel fuel temperature information	1221 / 1320	By wire
10 (*)	Clutch pedal pressed information	7306 / 1320	By wire
11	Engine speed and position information	1313 / 1320	By wire
12	Information on depressing the brake pedal	2120 / 1320	By wire
13	Air flow admitted by the engine information	1310 / 1320	By wire
	Inlet air temperature before turbocharger information		
14	Accelerator pedal position information	1261 / 1320	By wire
15	Camshaft position information	1115 / 1320	By wire

16	Engine coolant temperature information	1220 / 1320	By wire
17	Engine oil pressure low information	4110 / 1320	By wire
18	Fault indicator lights on	BSI1 / 0004	CAN-B
	Engine management ECU fault information		
	Particle emission filter clogging level information		
19	Cruise control or speed limiter reference values	BSI1 / 1320	CAN-C
	Quantity of fuel added information		
	Particle emission filter clogging risk information	1320 / BSI1	
	Minimum additive level reached information		
	Engine running information		
	Engine management ECU fault information		
	Request for activation of the heated rear screen to assist with regeneration of the particle emission filter		
20 (*)	Fuel gauge signals from the pump gauge module and from the secondary fuel gauge	4315 / BSI1	By wire
21 (*)	Fuel gauge signal from the pump gauge module	1211 / (4315 - BSI1)	By wire
22 (*)	Vehicle speed information	(7020 - 7800) / 1320	CAN-C
		(7020 - 7800) / BSI1	
23 (*)	Control of the heater element for the oil vapours resuction 1	1320 / 1273	By wire
24	Control of the fuel additive pump	1320 / 1283	By wire
25	Control of the alternator	1320 / 1020	LIN
	Alternator type information	1020 / 1320	
	Alternator faults information		
26	Proportional oxygen sensor heating control	1320 / 1357	By wire
	Information on mixture coming from the oxygen sensor	1357 / 1320	By wire
27	Turbocharging air cooler electric mixer control	1320 / 1324	Open cycle ratio
	Turbocharging air cooler electric mixer position information	1324 / 1320	By wire
28	Electrical control of the EGR electrovalve	1320 / 1297	Open cycle ratio
	Electric EGR solenoid valve position information	1297 / 1320	By wire
	EGR exchanger by-pass position information		
29	Control of the fuel flow regulator	1320 / 1208	Open cycle ratio
30	Control of the turbocharger pressure regulation electrovalve	1320 / 1229	Open cycle ratio
31	Exhaust gas recirculation wired solenoid valve control	1320 / 1253	Open cycle ratio
32	Control of the diesel fuel heater	1320 / 1276	By wire
33	Pre-post heating relay control	1320 / 1158	By wire
	Pre-post heat unit diagnostics information	1158 / 1320	By wire

34	Control of pre-heater plugs	1158 / 1160	By wire
35	High-speed control	1320 / 1504 1320 / 1509	By wire
36	Right-hand fan high speed supply	1509 / 1511	By wire
37	Right-hand fan low speed supply	1504 / 1511	By wire
38	Right-hand fan low speed supply	1512 / 1504	By wire
39	Low speed control High-speed control	1320 / 1508	By wire
40	Left-hand fan low speed or high speed supply	1508 / 1512	By wire
41	Fuel injector control cylinder 4	1320 / 1334	By wire
42	Fuel injector control cylinder 3	1320 / 1333	By wire
43	Fuel injector control cylinder 2	1320 / 1332	By wire
44	Fuel injector control cylinder 1	1320 / 1331	By wire
(*) According to version			

HELP IN DIAGNOSIS : DIAGNOSTIC WARNING LAMP LIGHTS - ENGINE DV6C (CONTINENTAL SID 807) BRANCH 2

1 - PRESENTATION : DOCUMENT

This document groups together the main diagnostic information for the vehicle concerned and supplements the diagnostic procedures in the diagnostic equipment.

2 - INSTRUCTIONS

General procedure for using the diagnostic assistance document and the diagnostic tool.

3 - GENERAL

Flow chart : Hdi direct injection system CONTINENTAL SID 807 (engine DV6C).

Operating methods : Hdi direct injection system CONTINENTAL SID 807 (engine DV6C).

4 - SPECIAL OPERATING FEATURES

> **WARNING :** On vehicles with hands-free access and starting, put the "hands-free" remote control in the electronic key reader so that all the operations and diagnostic services of the engine management ECU are functional

5 - PRELIMINARY CHECKS

Check the battery voltage.

Visually check the condition of the battery.

Check the connections of the battery.

6 - PROCEDURE BY FAULT CODES

The fault code tables contain all the fault codes relating the system.

6 - 1 - Table : Fault codes - Engine DV6C (CONTINENTAL SID 807) branch 2

> **WARNING :** A fault code followed by the mention "After-Sales" appears in the case of a problem that is likely to be detected by the customer. These fault codes should be dealt with only if the complaint indicated by the customer corresponds to one of the possible customer complaints associated with the fault code (Refer to the fault codes table to check the faulty component concerned)

Two cases are possible :

- The fault code corresponds to the customer complaint indicated : Deal with fault code

- The fault code does not correspond to the customer complaint indicated : Do not deal with the fault code

> **WARNING :** It is possible for 2 fault codes bearing the same title to be present at the same time : One fault code with the mention "After-Sales" and the other without. These 2 fault codes are recorded from similar strategies. In this case, deal with the fault code that is without the mention "After-Sales"

Fault codes	After sales description of the fault code	Rectificatio priority
P0001	Control of the fuel flow regulator : Open circuit	1
P0002	Control of the fuel flow regulator : Incoherence of the control current of the flow regulation valve	1
P0003	Control of the fuel flow regulator : Short circuit to earth	1
P0004	Control of the fuel flow regulator : Short circuit to positive	1
P0069	Coherence fault : At idle, lack of coherence between the manifold inlet pressure measurement and the atmospheric pressure measurement	3
P0087	Fuel circuit : The pressure measured in the injection rail is less than the setting	1
P0088	Fuel circuit : Pressure measured in the injection rail above the reference	3
P0093	Fuel circuit : Incoherence on the fuel pressure with the flow regulator jammed open	3
P0097	Measurement of the manifold inlet air temperature : Short circuit to earth : Temperature too high	1
P0098	Measurement of the manifold inlet air temperature : Short circuit to positive or open circuit : Temperature too low	1
P0100	Air flow measure : Quantity of air above the maximum threshold	3
P0102	Air flow measure : Signal incoherent (frequency too low)	3
P0112	Measurement of the air temperature at the air flow sensor : Short circuit to earth : Temperature too high	1
P0113	Measurement of the air temperature at the air flow sensor : Short circuit to positive or open circuit : Temperature too low	1
P0115	Engine water temperature measure : Temperature rise test	3

P0117	Engine water temperature measure : Short circuit to earth : Value too high	1
P0118	Engine water temperature measure : Short circuit to positive or open circuit : Value too low	1
P0190	Fuel circuit : When stopped, the pressure of the injection rail decreases too slowly	3
P0191	Measurement of the pressure in the fuel injection rail : Voltage variation outside the tolerance	3
P0192	Measurement of the pressure in the fuel injection rail : Short circuit to earth : Pressure too low	1
P0193	Measurement of the pressure in the fuel injection rail : Short circuit to positive : Pressure too high	1
P0201	Injector 1 signal. : Open circuit	1
P0202	Injector 2 signal. : Open circuit	1
P0203	Injector 3 signal. : Open circuit	1
P0204	Injector 4 signal. : Open circuit	1
P0234	Charge pressure regulation : Air pressure above the reference value	2
P0237	Measurement of the manifold inlet pressure : Short circuit to earth : Pressure too low	1
P0238	Measurement of the manifold inlet pressure : Short circuit to positive or open circuit : Pressure too high	1
P0243	Turbocharger control : Open circuit	1
P0245	Turbocharger control : Short circuit to earth	1
P0246	Turbocharger control : Short circuit to positive	1
P0262	Injector 1 signal. : Short circuit between two wires	1
P0265	Injector 2 signal. : Short circuit between two wires	1
P0268	Injector 3 signal. : Short circuit between two wires	1
P0271	Injector 4 signal. : Short circuit between two wires	1
P0299	Charge pressure regulation : Air pressure below the reference value	2
P0405	Measurement of the position of the EGR valve : Open circuit or short circuit to earth	1
P0406	Measurement of the position of the EGR valve : Short circuit to positive	1
P0421	Catalytic converter : Detected absent	-

P0489	EGR valve : Position incorrect (too open)	2
P0490	EGR valve : Position incorrect (too closed)	2
P0500	Intersystem CAN network : Speed information incorrect or absent	1
P0562	Battery voltage measurement : System voltage too low	1
P0563	Battery voltage measurement : System voltage too high	1
P062B	Downloading / Configuration : Downloading of the resetting of the injectors not carried out	1
P062D	Injectors control : Injection bank supply voltage outside tolerance	1
P0630	Downloading / Configuration : VIN numbering fault	1
P0658	5V sensors supply n°1 (Air conditioning pressure sensor, Rail pressure sensor, EGR valve position sensor, Variable geometry turbocharger position sensor, Air mixer position sensor, Turbocharging pressure sensor, Particle emission filter differential pressure sensor, EGR exchanger bypass position sensor) : Voltage too low	1
P0659	5V sensor supply no. 1 (Air conditioning pressure sensor ; Rail pressure sensor ; EGR valve position sensor ; Variable geometry turbo position sensor ; Air mixer position sensor ; Supercharging pressure sensor ; Particle filter differential pressure sensor ; EGR exchanger bypass position sensor) : Voltage too high	1
P1166	Fuel circuit : Maximum rail pressure exceeded	3
P11AB	Air circuit : Turbocharging pressure below the maximum threshold	3
P1294	Fuel circuit : Critical maximum rail pressure exceeded at certain points	3
P12A1	No. 1 cylinder : Injector injects too much or remains jammed in the open position	3
P12A2	No. 1 cylinder : Injector not injecting enough, or poor cylinder compression	3
P12A4	No. 2 cylinder : Injector injects too much or remains jammed in the open position	3
P12A5	No. 2 cylinder : Injector not injecting enough, or poor cylinder compression	3
P12A7	No. 3 cylinder : Injector injects too much or remains jammed in the open position	3
	No. 3 cylinder : Injector not injecting	

P12A8	enough, or poor cylinder compression	3
P12AA	No. 4 cylinder : Injector injects too much or remains jammed in the open position	3
P12AB	No. 4 cylinder : Injector not injecting enough, or poor cylinder compression	3
P1350	Engine preheating : Short circuit to earth on the relay control	1
P1352	Engine preheating : Fault on the pre-heating relay or glow plugs	1
P1412	Particle filter : Engine reconfiguration activated following an electrical fault of the measurement of the differential pressure sensor or of the measurement of the particle emission filter temperature	1
P1457	Particle filter : Detected absent	3
P1459	EGR valve : Blocked pipe detected	-
P160A	Downloading / Configuration : Homologation no. configuration fault	1
P1613	Downloading / Configuration : Downloading fault of the configuration of the ECU	1
P1641	Computer : Failure of the initialisation of the injector bank, or harness fault	1
P2031	Particle emission filter upstream temperature measurement : Plausibility when starting	1
P2032	Particle emission filter upstream temperature measurement : Short circuit to earth	1
P2033	Particle emission filter upstream temperature measurement : Short circuit to positive	1
P2101	Control of the air mixer : Overheating or excess current	1
P2102	Control of the air mixer : Electrical fault	1
P2127	Measurement of the air mixer position : Short circuit to earth	1
P2128	Measurement of the air mixer position : Short circuit to positive or open circuit	1
P2144	Control of the EGR valve : Electrical fault	1
P2146	Control of injectors : Injection bank 1 : Short circuit	1
P2148	Injectors control : Injection bank 1 : Voltage too high	1
P2173	Air metering valve : Position incorrect (too open)	2
P2175	Air metering valve : Position incorrect (too closed)	2
	Measurement of the atmospheric	

P2227	pressure : Voltage variation outside the tolerance	1
P2228	Measurement of the atmospheric pressure : Value too low	1
P2229	Measurement of the atmospheric pressure : Value too high	1
P2413	Control of the EGR valve : Overheating or excess current	1
P242F	Particle filter : Detected clogged	3
P2452	Measurement of the particle emission filter differential pressure : Plausibility before starting fault	3
P2454	Measurement of the particle emission filter differential pressure : Voltage too low	1
P2455	Measurement of the particle emission filter differential pressure : Voltage too high	1
P2562	Turbocharger : Position incorrect relative to requirement, not enough turbo	2
P2563	Turbocharger : Position incorrect in relation to the setting, too much turbo	2
P2564	Variable geometry turbocharger position measurement : Short circuit to earth	1
P2565	Measurement of the position of the turbocharger : Short circuit to positive or open circuit	1
P2670	N° 5 2 V sensors supply (Accelerator pedal sensor) : Voltage too low	1
P2671	N° 5 2 V sensors supply (Accelerator pedal sensor) :Voltage too high	1
P2685	N° 5 3 V sensors supply (Engine speed sensor ; Camshaft sensor) : Voltage too low	1
P2686	N° 5 3 V sensors supply (Engine speed sensor ; Camshaft sensor) :Voltage too high	1
P3007	Air circuit : Air flow lower than recommended	3
P3008	Air circuit : Air flow higher than recommended	3
U0073	Intersystem CAN network : CAN in error	1
U0121	Intersystem CAN network : Absence of communication with the ABS/ESP ECU	1
U0140	Intersystem CAN network : Absence of communication with the BSI ECU	1
U0315	Intersystem CAN network : Error in length or prohibited value on the ABS/ESP datastream	1
U0322	Intersystem CAN network : Error in length or prohibited value on the BSI datastream	1

U1000	Computer : The engine ECU is detected mute by one of the ECUs on the network	1

6 - 2 - Table : Fault codes - Automatic gearbox ECU

Deal with the fault codes present in expert mode.

6 - 3 - Table ; Fault codes - Controlled manual gearbox ECU

Deal with the fault codes present in expert mode.

7 - CHECK AFTER OPERATION

Put the vehicle under the conditions of appearance as described in the customer complaint, so as to check and confirm that the customer complaint has disappeared.

Use the information linked to the fault code diagnosed, from the chapter "Table : fault codes".

INSTRUCTIONS : DIAGNOSTIC ASSISTANCE DOCUMENT

Aid to diagnosis can be used in the following modes :

- "diagnostic mode" as an addition to the diagnostic methods that are available in the diagnostic tool
- "expert mode" as an addition to the functions made available in the diagnostic tool

Once you are familiar with the customer complaint, keep to the sequence of the following stages in the repair diagnosis process.

1 - TAKING ACCOUNT OF THE CUSTOMER COMPLAINT

Be aware of the customer complaint and of the conditions of appearance as described on reception of the vehicle.

Reproduce the customer complaint.

2 - DIAGNOSTIC

When using the diagnostic tool to access diagnosis (including aid to diagnosis and methods) :

- Select : "Power unit"
- Select : "Engine"

2 - 1 - Pre-diagnosis

Consult the aid to diagnosis to arrive at the prediagnosis.

Methodology :

- Refer to chapter : Special operating features (*)
- Read the operating principles of the system in this chapter : General
- Carry out the operations described in the chapter : Preliminary checks

(*) The user may perceive certain operating features as malfunctions. The operating features correspond to normal operation and are in conformity with the vehicle specification. The list of operating features may vary depending on the vehicle's trim level.

2 - 2 - Straight to the point

Check whether the customer complaint flagged up can be resolved with the aid of a "straight to the point".

2 - 3 - Procedure by fault codes

The aid to diagnosis lists all the fault codes that relate to the customer complaint.

Consult the chapter : Table of fault codes.

Methodology :

- Consult the information relating to the fault codes
- If there are multiple fault codes, deal with them in the order of priority defined in the aid to diagnosis, indexing the lowest in priority
- Select the method by fault codes from the diagnostic tool

2 - 4 - Expert mode

If it is not possible to demonstrate the part that is faulty using a method :

- Look in the aid to diagnosis for the information on how the custom complaint relates to the fault codes in the chapter "Method by fault codes"
- If necessary use the functions made available in the diagnostic tool (Reading of fault codes, Parameter measures and Actuator tests)

3 - REPAIR

Repair the vehicle. (Repair or replacement of the faulty component).

4 - CHECK: AFTER REPAIR

Carry out the operations described in the chapter : Checks after repair.

Put the vehicle under the conditions of appearance as described in the customer complaint, so as to check and confirm that the customer complaint has disappeared.

Methodology :

- Use the information linked to the fault code diagnosed, from the chapter "Table : fault codes"
- Perform any additional checks as required by the Aid to Diagnosis so as to prevent the causes from recurring, depending on the origin of the problem or on the repairs done on the vehicle

FLOW CHART : HDI DIRECT INJECTION SYSTEM CONTINENTAL SID 807 (ENGINE DV6C)

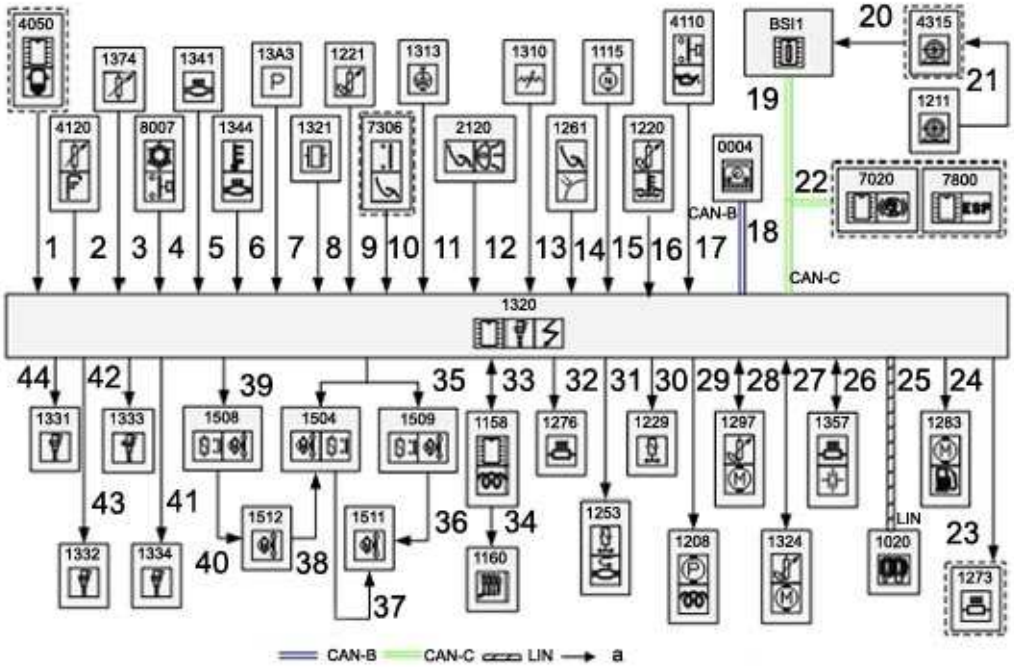

d4ea6rhd

Key : "a" Wire connection.

Components description table	
element	Designation
BSI1	Built-in systems interface
0004	Instrument panel
1020	Alternator
1115	Cylinder reference sensor
1158	Pre-post heating control unit
1160	Pre-heater plugs
1208	diesel injection pump
1211	Fuel gauge pump
1220	Coolant temperature sensor
1221	Diesel fuel thermal sensor
1229	Variable geometry turbocharger pressure regulation solenoid valve
1253	Exhaust gas recirculation (EGR) wired solenoid valve
1261	Accelerator pedal position sensor
1273 (*)	Oil breather re-heat resistor 1
1276	Diesel fuel heater
1283	Fuel additive pump
1297	Electrically-controlled exhaust gas recycling valve
13A3	Inlet air temperature and pressure sensor
1310	Air flowmeter
1313	Engine speed sensor
1320	Engine ECU

1321	Diesel high pressure sensor
1324	Electric mixer with turbocharging air cooler position repeat
1331	Diesel injector - Cylinder No. 1
1332	Diesel injector - Cylinder No. 2
1333	Diesel injector - Cylinder No. 3
1334	Diesel injector - Cylinder No. 4
1341	Particle filter differential pressure sensor
1344	Upstream exhaust gas high temperature sensor
1357	Proportional oxygen sensor
1374	Position repeat sensor for the control diaphragm of the dump valve
1504	Left-hand and right-hand fans serial supply relay
1508	Cooling fan slow speed supply relay
1509	Cooling fan fast speed supply relay
1511	Right-hand fan
1512	Left-hand fan
2120	Brake twin function switch
4050 (*)	Water in fuel sensor
4110	Engine oil pressure switch
4120	Engine oil level sensor
4315 (*)	Fuel gauge
7020 (*)	ABS ECU
7306 (*)	Cruise control safety switch (clutch)
7800 (*)	ESP ECU
8007	Air conditioning pressure switch
(*) According to version	

Description of the exchanges of information			
Connection number	signal	Transmitter / Receiver	Nature of signal
1 (*)	Information on presence of water in the diesel fuel	4050 / 1320	By wire
2	Engine oil level information	4120 / 1320	By wire
3	Dump valve position repeat information	1374 / 1320	By wire
4	Refrigerant pressure information	8007 / 1320	By wire
5	Particle emission filter clogging level information	1341 / 1320	By wire
6	Exhaust gas temperature information	1344 / 1320	By wire
7	Engine intake inlet air temperature information	13A3 / 1320	By wire
	Engine intake inlet air pressure information		
8	Information on the diesel fuel high pressure (Fuel high pressure common injection rail)	1321 / 1320	By wire
9	Diesel fuel temperature information	1221 / 1320	By wire
10 (*)	Clutch pedal pressed information	7306 / 1320	By wire
11	Engine speed and position information	1313 / 1320	By wire
12	Information on depressing the brake pedal	2120 / 1320	By wire
13	Air flow admitted by the engine information	1310 / 1320	By wire
	Inlet air temperature before turbocharger information		
14	Accelerator pedal position information	1261 / 1320	By wire
15	Camshaft position information	1115 / 1320	By wire

16	Engine coolant temperature information	1220 / 1320	By wire
17	Engine oil pressure low information	4110 / 1320	By wire
18	Fault indicator lights on	BSI1 / 0004	CAN-B
	Engine management ECU fault information		
	Particle emission filter clogging level information		
19	Cruise control or speed limiter reference values	BSI1 / 1320	CAN-C
	Quantity of fuel added information		
	Particle emission filter clogging risk information	1320 / BSI1	
	Minimum additive level reached information		
	Engine running information		
	Engine management ECU fault information		
	Request for activation of the heated rear screen to assist with regeneration of the particle emission filter		
20 (*)	Fuel gauge signals from the pump gauge module and from the secondary fuel gauge	4315 / BSI1	By wire
21 (*)	Fuel gauge signal from the pump gauge module	1211 / (4315 - BSI1)	By wire
22 (*)	Vehicle speed information	(7020 - 7800) / 1320	CAN-C
		(7020 - 7800) / BSI1	
23 (*)	Control of the heater element for the oil vapours resuction 1	1320 / 1273	By wire
24	Control of the fuel additive pump	1320 / 1283	By wire
25	Control of the alternator	1320 / 1020	LIN
	Alternator type information	1020 / 1320	
	Alternator faults information		
26	Proportional oxygen sensor heating control	1320 / 1357	By wire
	Information on mixture coming from the oxygen sensor	1357 / 1320	By wire
27	Turbocharging air cooler electric mixer control	1320 / 1324	Open cycle ratio
	Turbocharging air cooler electric mixer position information	1324 / 1320	By wire
28	Electrical control of the EGR electrovalve	1320 / 1297	Open cycle ratio
	Electric EGR solenoid valve position information	1297 / 1320	By wire
	EGR exchanger by-pass position information		
29	Control of the fuel flow regulator	1320 / 1208	Open cycle ratio
30	Control of the turbocharger pressure regulation electrovalve	1320 / 1229	Open cycle ratio
31	Exhaust gas recirculation wired solenoid valve control	1320 / 1253	Open cycle ratio
32	Control of the diesel fuel heater	1320 / 1276	By wire
33	Pre-post heating relay control	1320 / 1158	By wire
	Pre-post heat unit diagnostics information	1158 / 1320	By wire

34	Control of pre-heater plugs	1158 / 1160	By wire
35	High-speed control	1320 / 1504 1320 / 1509	By wire
36	Right-hand fan high speed supply	1509 / 1511	By wire
37	Right-hand fan low speed supply	1504 / 1511	By wire
38	Right-hand fan low speed supply	1512 / 1504	By wire
39	Low speed control High-speed control	1320 / 1508	By wire
40	Left-hand fan low speed or high speed supply	1508 / 1512	By wire
41	Fuel injector control cylinder 4	1320 / 1334	By wire
42	Fuel injector control cylinder 3	1320 / 1333	By wire
43	Fuel injector control cylinder 2	1320 / 1332	By wire
44	Fuel injector control cylinder 1	1320 / 1331	By wire
(*) According to version			

HELP IN DIAGNOSIS : STARTING PROBLEM - ENGINE DV6C (CONTINENTAL SID 807) BRANCH 2

1 - PRESENTATION : DOCUMENT

This document groups together the main diagnostic information for the vehicle concerned and supplements the diagnostic procedures in the diagnostic equipment.

2 - INSTRUCTIONS

General procedure for using the diagnostic assistance document and the diagnostic tool.

3 - SPECIAL OPERATING FEATURES

For vehicles with hands-free access and starting : If the durations of pressing of the engine starting switch are less than 250 ms, it is possible that the customer's request may not be taken into account (ignition not switched on, engine not started); on the other hand, this press on the engine starting switch will nevertheless trigger the vehicle's networks.

> **WARNING :** On vehicles with hands-free access and starting, put the "hands-free" remote control in the electronic key reader so that all the operations and diagnostic services of the engine management ECU are functional

4 - GENERAL

General description of the functions relating to the symptom.

The symptom "Starting problem" covers the following functions :

- Presentation : Multiplexed structure
- Presentation : Engine immobiliser
- Principles of operation : Engine immobiliser
- Principles of operation : Hands free starting
- Principles of operation : Electrical supply
- Flow chart : Hdi direct injection system CONTINENTAL SID 807 (engine DV6C)
- Operating methods : Hdi direct injection system CONTINENTAL SID 807 (engine DV6C)

5 - PRELIMINARY CHECKS

Check the battery voltage.

Visually check the condition of the battery.

Check the connections of the battery.

Check the fuel level on the instrument panel.

6 - PROCEDURE BY FAULT CODES

The fault code tables contain all the fault codes relating the system.

Table : Fault codes - Engine ECU (CONTINENTAL SID 807) branch 2.

> **WARNING :** A fault code followed by the mention "After-Sales" appears in the case of a problem that is likely to be detected by the customer. These fault codes should be dealt with only if the complaint indicated by the customer corresponds to one of the possible customer complaints associated with the fault code (Refer to the fault codes table to check the faulty component concerned)

Two cases are possible :

- The fault code corresponds to the customer complaint indicated : Deal with fault code
- The fault code does not correspond to the customer complaint indicated : Do not deal with the fault code

> **WARNING :** It is possible for 2 fault codes bearing the same title to be present at the same time : One fault code with the mention "After-Sales" and the other without. These 2 fault codes are recorded from similar strategies. In this case, deal with the fault code that is without the mention "After-Sales"

Fault codes	After sales description of the fault code	Rectificatio priority
P0001	Control of the fuel flow regulator : Open circuit	1
P0002	Control of the fuel flow regulator : Incoherence of the control current of the flow regulation valve	1
P0003	Control of the fuel flow regulator : Short circuit to earth	1
P0004	Control of the fuel flow regulator : Short circuit to positive	1
P0016	Synchronisation : Incoherence between the information from the engine speed sensor and the camshaft sensor	1
P0017	Starting monitoring : Synchronisation time too long	1
P0070	Intersystem CAN network : Outside temperature value received via the CAN not valid	1
P0087	Fuel circuit : The pressure measured in the injection rail is less than the setting	1
P0088	Fuel circuit : Pressure measured in the injection rail above the reference	3
P0093	Fuel circuit : Incoherence on the fuel pressure with the flow regulator jammed open	3
P0190	Fuel circuit : When stopped, the pressure of the injection rail decreases too slowly	3
P0191	Measurement of the pressure in the fuel injection rail : Voltage variation outside the tolerance	3
P0192	Measurement of the pressure in the fuel injection rail : Short circuit to earth : Pressure too low	1
P0193	Measurement of the pressure in the fuel injection rail :	1

	Short circuit to positive : Pressure too high	
P0201	Injector 1 signal. : Open circuit	1
P0202	Injector 2 signal. : Open circuit	1
P0203	Injector 3 signal. : Open circuit	1
P0204	Injector 4 signal. : Open circuit	1
P0215	Main relay control : Poor operation of the relay, the ECU is not being supplied as it should be	1
P0262	Injector 1 signal. : Short circuit between two wires	1
P0263	No. 1 cylinder : Injector resetting outside tolerance	3
P0265	Injector 2 signal. : Short circuit between two wires	1
P0266	No. 2 cylinder : Injector resetting outside tolerance	3
P0268	Injector 3 signal. : Short circuit between two wires	1
P0269	No. 3 cylinder : Injector resetting outside tolerance	3
P0271	Injector 4 signal. : Short circuit between two wires	1
P0272	No. 4 cylinder : Injector resetting outside tolerance	3
P0299	Charge pressure regulation : Air pressure below the reference value	2
P0335	Engine speed measurement : Loss of signal	1
P0336	Engine speed measurement : Signal absent when starting	1
P0337	Engine speed measurement : Signal inconsistent, either too many or not enough teeth seen on one rev	1
P0339	Engine speed measurement : Sudden increase in the measurement	1
P0341	Measurement of the camshaft position : Camshaft signal not available	1
P0342	Measurement of the camshaft position : Loss of camshaft signal while the engine is running	1
P0409	EGR valve : Valve detected jammed closed during the ECU switching to dormant mode phase	2
P0421	Catalytic converter : Detected absent	-
P0489	EGR valve : Position incorrect (too open)	2
P050B	Starting monitoring : Starting time too long	3
P0516	Battery temperature sensor : Voltage below the minimum threshold	1
P0517	Battery temperature sensor : Voltage higher than the maximum threshold	1
P0562	Battery voltage measurement : System voltage too low	1
P0563	Battery voltage measurement : System voltage too high	1
P0606	Computer : Fault internal to "Watchdog" (CMM)	1
P0615	Starter : Temperature excessive or open circuit on the relay	1
P0620	Alternator : Alternator electrical fault	1
P0625	Alternator : Alternator low voltage fault	1
P0626	Alternator : Alternator high voltage fault	1
P062B	Downloading / Configuration : Downloading of the resetting of the injectors not carried out	1
P062D	Injectors control : Injection bank supply voltage outside tolerance	1

P0630	Downloading / Configuration : VIN numbering fault	1
P0658	5V sensors supply n°1 (Air conditioning pressure sensor, Rail pressure sensor, EGR valve position sensor, Variable geometry turbocharger position sensor, Air mixer position sensor, Turbocharging pressure sensor, Particle emission filter differential pressure sensor, EGR exchanger bypass position sensor) : Voltage too low	1
P0659	5V sensor supply no. 1 (Air conditioning pressure sensor ; Rail pressure sensor ; EGR valve position sensor ; Variable geometry turbo position sensor ; Air mixer position sensor ; Supercharging pressure sensor ; Particle filter differential pressure sensor ; EGR exchanger bypass position sensor) : Voltage too high	1
P065A	Alternator : Alternator mechanical fault	1
P0667	ECU internal temperature measurement : Voltage variation outside the tolerance	1
P0668	ECU internal temperature measurement : Short circuit to earth	1
P0669	ECU internal temperature measurement : Short circuit to positive	1
P0A1A	Alternator : Alternator communication fault	1
P0A3B	Alternator : Alternator temperature fault	1
P0A88	Battery : Voltage of the system below the minimum threshold	1
P0A89	Battery : Voltage of the system above the maximum threshold	1
P1114	Computer : Stopping of the engine by injection cut-off fault	3
P1162	EGR valve : Valve detected as being jammed open during the ECU sleep phase	2
P1166	Fuel circuit : Maximum rail pressure exceeded	3
P1176	Fuel circuit : Pressure measured in the injection rail higher than the reference with the flow regulator stuck (Anti-sticking test)	3
P1192	Computer : Stopping of the engine by high pressure pump supply cut-off fault	3
P1199	Fuel circuit : Incoherence on the reserve fuel pressure (Nearing no fuel)	3
P1294	Fuel circuit : Critical maximum rail pressure exceeded at certain points	3
P12A1	No. 1 cylinder : Injector injects too much or remains jammed in the open position	3
P12A2	No. 1 cylinder : Injector not injecting enough, or poor cylinder compression	3
P12A4	No. 2 cylinder : Injector injects too much or remains jammed in the open position	3
P12A5	No. 2 cylinder : Injector not injecting enough, or poor cylinder compression	3

P12A7	No. 3 cylinder : Injector injects too much or remains jammed in the open position	3
P12A8	No. 3 cylinder : Injector not injecting enough, or poor cylinder compression	3
P12AA	No. 4 cylinder : Injector injects too much or remains jammed in the open position	3
P12AB	No. 4 cylinder : Injector not injecting enough, or poor cylinder compression	3
P12B3	EGR valve : Position incorrect (Too open) (Service)	4
P1349	Engine preheating : Short circuit to positive or open circuit on the relay control	1
P1350	Engine preheating : Short circuit to earth on the relay control	1
P1352	Engine preheating : Fault on the pre-heating relay or glow plugs	1
P1459	EGR valve : Blocked pipe detected	-
P1490	Particle filter : Detected overloaded	3
P150A	Starting monitoring : Key info plausibility fault	1
P151A	Starting monitoring : The time for unlocking the immobiliser is too long	1
P160A	Downloading / Configuration : Homologation no. configuration fault	1
P1612	Computer : Fault internal to the EEPROM (Coded immobiliser)	1
P1613	Downloading / Configuration : Downloading fault of the configuration of the ECU	1
P1621	Computer : Software redundancy fault at the injection (Level 2)	1
P1631	Computer : Internal fault (injection with no load)	1
P1641	Computer : Failure of the initialisation of the injector bank, or harness fault	1
P1695	Controlled engine start and stop : Motor jammed	1
P1696	Controlled engine start and stop : Simultaneous starting and stopping request	1
P2146	Control of injectors : Injection bank 1 : Short circuit	1
P2148	Injectors control : Injection bank 1 : Voltage too high	1
P2265	Water in diesel sensor : Open circuit or short circuit to the plus	1
P2291	Starting monitoring : Pressure increase in the injection rail too slow when starting	3
P2413	Control of the EGR valve : Overheating or excess current	1
P242F	Particle filter : Detected clogged	3
P2685	5V sensor supply no. 3 (Engine speed sensor ; Camshaft sensor) : Voltage too low	1
P2686	5V sensor supply no. 3 (Engine speed sensor ; Camshaft sensor) :Voltage too high	1
P3007	Air circuit : Air flow lower than recommended	3
P3027	Air circuit : Air flow lower than recommended (Service)	4

U0073	Intersystem CAN network : CAN in error	1
U0121	Intersystem CAN network : Absence of communication with the ABS/ESP ECU	1
U0140	Intersystem CAN network : Absence of communication with the BSI ECU	1
U0315	Intersystem CAN network : Error in length or prohibited value on the ABS/ESP datastream	1
U0322	Intersystem CAN network : Error in length or prohibited value on the BSI datastream	1
U1000	Computer : The engine ECU is detected mute by one of the ECUs on the network	1
U1113	Intersystem CAN network : Absence of communication with the ABS/ESP ECU	1
U1118	Intersystem CAN network : Absence of communication with the BSI ECU	1
U1121	Intersystem CAN network : Absence of communication with the electric power steering ECU	1
U1133	LIN : The reversible alternator is confirmed absent	1
U1138	Intersystem CAN network : Absence of communication with the controlled clutch ECU	1
U1218	Intersystem CAN network : One of the parameters present in a datastream sent by the BSI is invalid	1
U1221	Intersystem CAN network : Prohibited value of the electric power steering datastream	1
U1313	Intersystem CAN network : Error in length or prohibited value on the ABS/ESP datastream	1
U1318	Intersystem CAN network : Error in length or prohibited value on the BSI datastream	1
U1321	Intersystem CAN network : Error of length or prohibited value of the datastream transmitted by the electric power steering ECU	1
U1333	LIN : Error in length or prohibited value of the data from the voltage retention device	1
U1338	Intersystem CAN network : Error of length or prohibited value of the datastream transmitted by the controlled clutch ECU	1
U1400	Alternator LIN network : Registering of a fault on the LIN network	1
U1401	Alternator LIN network : Recording of a fault on the slave node of the Alternator LIN	1

7 - PROCEDURE BY SYMPTOMS

The symptoms method is not applicable when there are fault codes.

7 - 1 - Function : Energy management - Electrical supplies

Symptom	Sub function of the system	Suspect areas
		Battery (Impacts - Leak - Oxidation -

Starting problem	Battery	internal fault)
		Battery discharged (Cause internal fault or external discharge)
	Central power switch positive supply	Supplies protection and management unit
		Electrical harnesses
		Built-in systems interface
	Ignition positive supply (+APC)	Engine fuse box
		Built-in systems interface
		Electrical harnesses
	Engine starting switch	Switch supply (and its fuse)
		Electrical harnesses
		Switch
		Built-in systems interface

7 - 2 - Function : Coded immobiliser

Symptom	Sub function of the system	Suspect areas
Starting problem	Authentication - Identification	Electronic key
		Programming of electronic keys
		Body CAN harness
		Supply of the electronic key reader
		Electronic key reader
		Built-in systems interface
	Engine control ECU locking status	Intersystems CAN harness
		Engine ECU
		Built-in systems interface
		Matching of the engine ECU

7 - 3 - Function Starting the engine

Symptom	Sub function of the system	Suspect areas
	Acquisition of the signal coming from the engine starting switch	Electrical harness between the following two components : Electronic key reader / Built-in systems interface
		Electrical harness between the following two components : Built-in systems interface / Engine fuse box
		Electronic key reader
		Built-in systems interface
		Engine fuse box
	Starter	Starter motor protection fuse
		Starter
		Battery
		Electrical harnesses
		Locking of the engine
		Brake switch

Starting problem	Acquisition of the signal coming from the brake switch (Automatic or piloted manual gearbox)	Electrical harness between the following two components : Brake switch / Built-in systems interface
		Built-in systems interface
	Acquisition of the signal coming from the clutch master cylinder position sensor (Manual gearbox)	Clutch master cylinder position sensor
		Electrical harness between the following two components : Clutch master cylinder position sensor / Engine ECU
		Engine ECU
	Built-in systems interface	Configuration of the BSI : Type of starting
		Configuration of the BSI : Type of key
		Configuration of the BSI : Type of gearbox
	Engine ECU	Configuring the engine management ECU : Type of gearbox
		Configuring the engine management ECU : Type of starting
	Gearbox starting authorisation	Electrical harness between the following two components : automatic gearbox or piloted manual gearbox ECU / Engine ECU (*)
		Electrical harness between the following two components : multifunction switch / Engine ECU (*)
		multifunction switch (*)
		Automatic gearbox or piloted manual gearbox ECU (*)
		Engine ECU
	BSI starting authorisation	Electrical harness between the following two components : Engine ECU / Engine fuse box
		Engine ECU
		Engine fuse box
		Built-in systems interface
(*) According to vehicle equipment		

7 - 4 - Function : Power unit

Symptom	Sub function of the system	Suspect areas
	Coolant temperature	Water temperature sensor
		Electrical harnesses
	Synchronisation	Engine speed sensor
		Camshaft sensor
		Electrical harnesses
		Engine ECU
	Fuel supply	Fuel level
		Fuel filter
		Fuel gauge
		reservoir
		Fuel tank breather
		Fuel gauge tank unit
		Fuel grade

Starting problem	Air supply	Air duct
		Air cleaner
		Air metering valve
		Electrical harnesses
		Air flow meter
		Engine ECU
	Pre-post heating system (thermostarter)	Pre-heater plugs
		Pre-heater control unit
		Electrical harnesses
		Engine ECU
	Injection system	high pressure fuel pump
		Fuel high pressure sensor
		Fuel injectors
		Fuel high pressure common injection rail
		Hoses
		Electrical harnesses
		Engine ECU
		Manual priming pump
	Exhaust	Exhaust system
		Particle filter
		Exhaust gas recycling valve
	engine	Compression ratio

8 - CHECK AFTER OPERATION

Put the vehicle under the conditions of appearance as described in the customer complaint, so as to check and confirm that the customer complaint has disappeared.

Methodology :

- Use the information linked to the fault code diagnosed, from the chapter "Table : fault codes"
- Use the information on the conditions of appearance described by the customer to achieve a diagnosis by symptom

INSTRUCTIONS : DIAGNOSTIC ASSISTANCE DOCUMENT

Aid to diagnosis can be used in the following modes :

- "diagnostic mode" as an addition to the diagnostic methods that are available in the diagnostic tool
- "expert mode" as an addition to the functions made available in the diagnostic tool

Once you are familiar with the customer complaint, keep to the sequence of the following stages in the repair diagnosis process.

1 - TAKING ACCOUNT OF THE CUSTOMER COMPLAINT

Be aware of the customer complaint and of the conditions of appearance as described on reception of the vehicle.

Reproduce the customer complaint.

2 - DIAGNOSTIC

When using the diagnostic tool to access diagnosis (including aid to diagnosis and methods) :

- Select : Power unit
- Select : Engine

2 - 1 - Pre-diagnosis

Consult the aid to diagnosis to arrive at the prediagnosis.

Methodology :

- Refer to chapter : Special operating features (*)
- Read the operating principles of the system in this chapter : General
- Carry out the operations described in the chapter : Preliminary checks

(*) The user may perceive certain operating features as malfunctions. The operating features correspond to normal operation and are in conformity with the vehicle specification. The list of operating features may vary depending on the vehicle's trim level.

2 - 2 - Straight to the point

Check whether the customer complaint flagged up can be resolved with the aid of a "straight to the point".

2 - 3 - Procedure by fault codes

The aid to diagnosis lists all the fault codes that relate to the customer complaint.

Consult the chapter : Table of fault codes.

Methodology :

- Consult the information relating to the fault codes
- If there are multiple fault codes, deal with them in the order of priority defined in the aid to diagnosis, indexing the lowest in priority
- Select the method by fault codes from the diagnostic tool

2 - 4 - Procedure by symptoms

> **WARNING :** Apply the procedure by fault codes and then the procedure by symptoms

The aid to diagnosis lists by symptoms all the suspect areas that relate to the customer complaint.

Consult the chapter : Procedure by symptoms.

Methodology :

- Look for the information that relates to the symptom
- Select the method by symptom from the diagnostic tool (in the absence of a fault code or if the method by fault codes is not successful)

2 - 5 - Expert mode

If it is not possible to demonstrate the part that is faulty using a method :

- In the aid to diagnosis, look for the information relating to the customer complaint and linked to the fault codes in the chapter "Method by fault codes" and/or linked to the symptoms in the chapter "Method by symptoms"
- If necessary use the functions made available in the diagnostic tool (Reading of fault codes, Parameter measures and Actuator tests)

3 - REPAIR

Repair the vehicle. (Repair or replacement of the faulty component).

4 - CHECK : AFTER REPAIR

Carry out the operations described in the chapter : Checks after repair.

Put the vehicle under the conditions of appearance as described in the customer complaint, so as to check and confirm that the customer complaint has disappeared.

Methodology :

- Use the information linked to the fault code diagnosed, from the chapter "Table : fault codes"
- Use the information on the conditions of appearance described by the customer to achieve a diagnosis by symptom
- Perform any additional checks as required by the Aid to Diagnosis so as to prevent the

causes from recurring, depending on the origin of the problem or on the repairs done on the vehicle

PRESENTATION : MULTIPLEXED STRUCTURE

NOTE : (*) According to version

1 - FOREWORD

Multiplexing consists of sending several pieces of digital information between various items of electrical equipment, on a single transmission channel made up of 2 wires, "CAN high" and "CAN low".

1 - 1 - Definition of multiplexing

Multiplexing is a means of operating electrical equipment needing an specially adapted electrical installation.

A multiplexed architecture consists of a single circuit, the bus, which connects all of the ECUs.

All the messages sent on this circuit comprise an "information" part and a part for identification of the receiver or identification of the transmitter.

NOTE : These messages are referred to as "data streams"

Multiplexing uses the CAN communication protocol (Controller Area Network).

The associated architecture simplifies the harnesses and makes it possible to offer the customer new functions.

1 - 2 - Advantage of multiplexing

Multiplexing allows :

- Electrical harnesses to be simplified
- Improvement in the number of functions (for the same number of wires)

2 - ELECTRICAL STRUCTURE

2 - 1 - Presentation

The vehicle's electrical architecture permits the following services :

- Communication and operation of the various components of the system
- ECU diagnostics, configuration or downloading

The electrical architecture consists of the following networks :

- A CAN-C connecting all of the ECUs of the power train assembly and the systems managing the suspension and wheels
- A CAN-B, connecting the ECUs for the safety and comfort systems
- LIN

The two CAN-C and CAN-B networks are separated physically, but they converge in the built-in systems interface.

The built-in systems interface, considered the master ECU for the two networks, contains a function referred to as a gateway which permits the transfer of information and data from one network to another, even if the operating speed of the two networks is different :

- The speed of transmission of the data on the CAN-C network is 500 kbits/s. (High rate network)
- The speed of transmission of the data on the CAN-B network is 83,3 kbits/s. (Low speed network)
- The speed of transmission of the data on the LIN network is 19,2 kbits/s

2 - 2 - Distribution of the connections to the network

CAN-C network :

- Engine ECU
- Continuously variable transmission ECU
- Rear final drive controlled clutch ECU (Four wheel drive)
- Dynamic stability control ECU
- Gyrometer/accelerometer sensor (*)
- Electric power steering ECU
- Steering wheel angle sensor
- Driving headlamps ECU
- "stop & start" control ECU
- Parking assistance ECU

CAN-B network :

- Hands-free starting unit
- Hands-free access unit
- Control module transponder
- Instrument panel
- Airbag ECU
- Air conditioning ECU
- Radio ECU
- CAN interface unit
- Multimedia set

LIN :

- Steering wheel controls (Lights stalk and wash/wipe stalk)
- Driver's door electric window and locking control pad (*)
- Brightness sensor
- Ultrasonic sensor
- Alarm siren control unit
- Alarm siren

CAN-C DIAG network : Diagnostic socket .

> **NOTE :** The CAN-C, CAN-B, LIN, CAN-C DIAG networks close down when the engine is switched off

2 - 3 - First assembly flow chart (Up to RPO 13418)

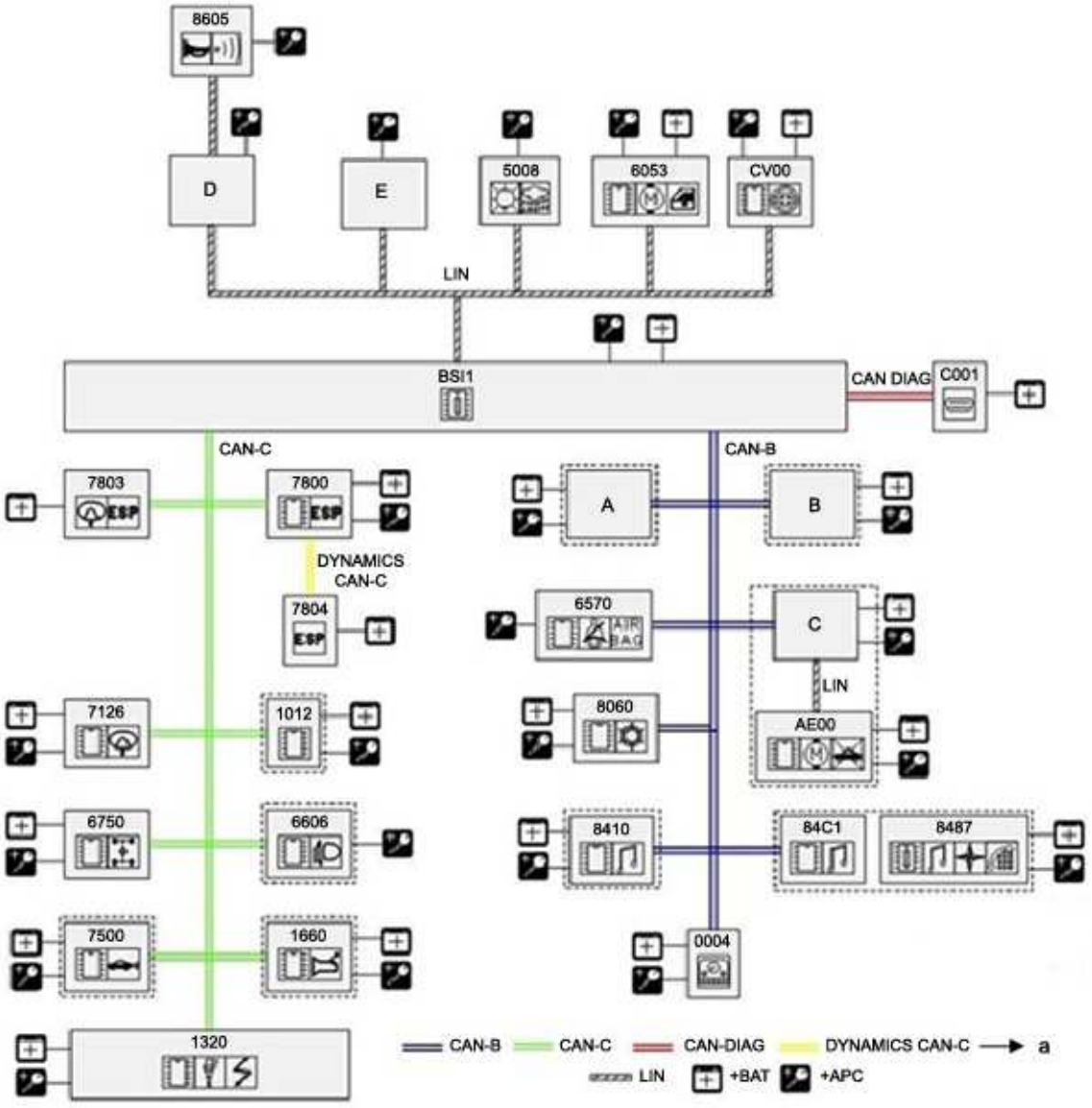

d4ea6sbp

"a" Wire connection.

Reference	Designation
A (*)	Hands-free access control unit
AE00 (*)	Electronic immobiliser
B (*)	Control module transponder
BSI1	Built-in systems interface
C (*)	Hands-free starting unit
C001	Diagnostic socket
CV00	Steering wheel controls
D	Alarm siren control unit
E	Ultrasonic sensor
0004	Instrument panel
1012 (*)	"stop & start" control ECU
1320	Engine ECU

1660 (*)	Continuously variable transmission ECU
5008	Rain and brightness sensor
6053	Driver's door electric window and locking control pad
6570	Airbag ECU
6750	Rear final drive controlled clutch ECU
6606 (*)	Driving headlamps ECU
7126	Electric power steering ECU
7500 (*)	Parking assistance ECU
7800	Dynamic stability control ECU
7803	Steering wheel angle sensor
7804	Gyroscope accelerometer sensor
8080	Air conditioning ECU
8410 (*)	Audio system
8487 (*)	Multimedia set
84C1 (*)	Multimedia interface unit
8605	Alarm siren
(*) According to version	

On the CAN-C network, the termination resistors are incorporated in the ECUs.

The built-in systems interface and the engine control ECU are the dominant ECUs.

The resistance value of the engine management ECU and the built-in systems interface is 120 ohms.

The resistance value of the other ECUs is 3 kohms.

NOTE : The engine fuse box is not of multiplexed type

2 - 4 - Second assembly flow chart (from RPO No. 13419)

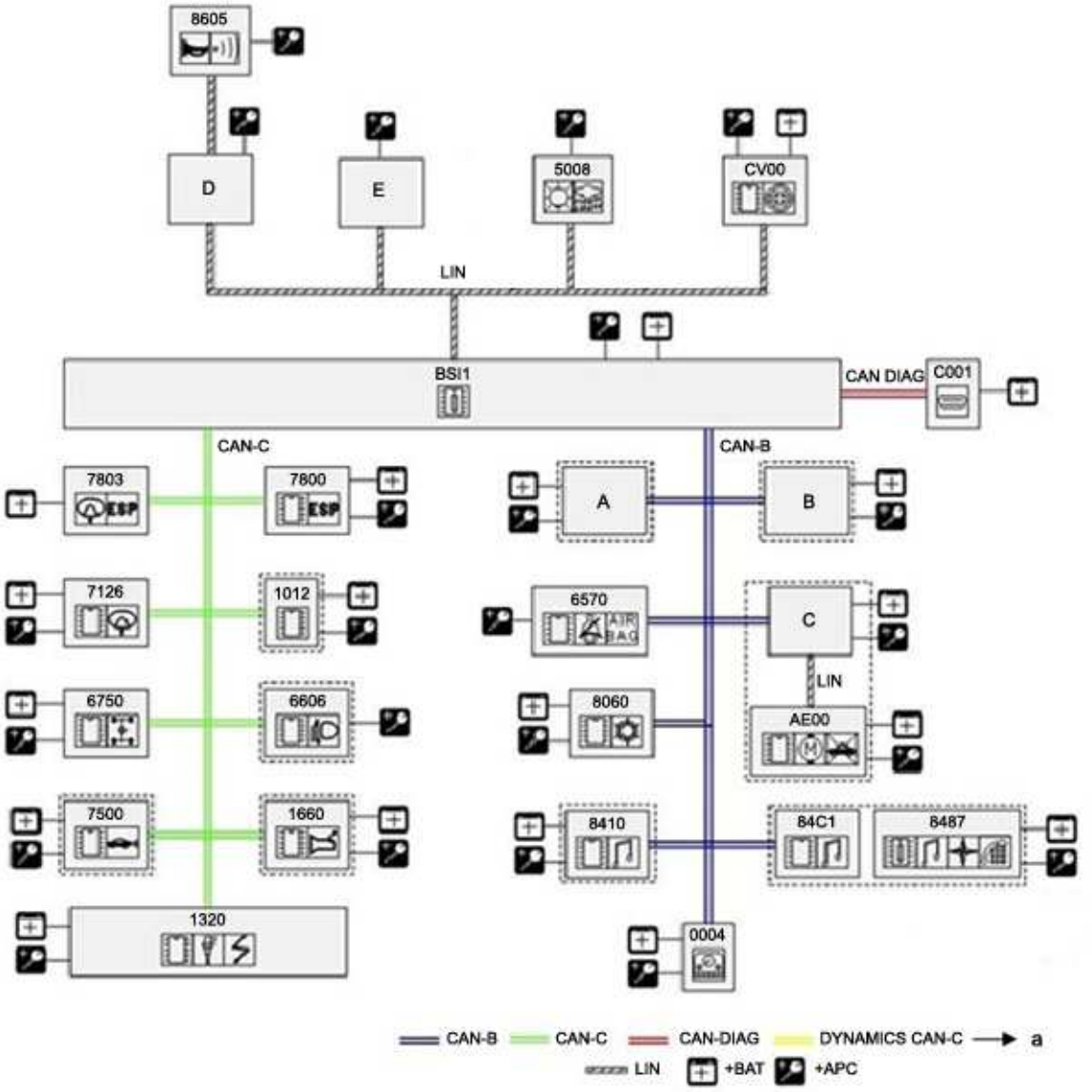

d4ea8tzp

"a" Wire connection.

Reference	Designation
A (*)	Hands-free access control unit
AE00 (*)	Electronic immobiliser
B (*)	Control module transponder
BSI1	Built-in systems interface
C (*)	Hands-free starting unit
C001	Diagnostic socket
CV00	Steering wheel controls
D	Alarm siren control unit
E	Ultrasonic sensor
0004	Instrument panel
1012 (*)	"stop & start" control ECU
1320	Engine ECU

1660 (*)	Continuously variable transmission ECU
5008	Rain and brightness sensor
6570	Airbag ECU
6750	Rear final drive controlled clutch ECU
6606 (*)	Driving headlamps ECU
7126	Electric power steering ECU
7500 (*)	Parking assistance ECU
7800	Dynamic stability control ECU
7803	Steering wheel angle sensor
8080	Air conditioning ECU
8410 (*)	Audio system
8487 (*)	Multimedia set
84C1 (*)	Multimedia interface unit
8605	Alarm siren
(*) According to version	

On the CAN-C network, the termination resistors are incorporated in the ECUs.

The built-in systems interface and the engine control ECU are the dominant ECUs.

The resistance value of the engine management ECU and the built-in systems interface is 120 ohms.

The resistance value of the other ECUs is 3 kohms.

NOTE : The engine fuse box is not of multiplexed type

3 - CAN-C NETWORK

3 - 1 - Presentation

The CAN-C consists of 2 twisted electrical wires.

The transmission of the information on this pair of wires takes place by means of the transmission of two levels of voltage, a high and a low associated respectively with the CAN-High wire and the CAN-Low wire.

The mathematical difference of these two levels of voltage generates two voltage values associated with the two logical levels 0 or 1.

The levels 0 and 1 constitute the elementary unit of information referred to as a BIT (binary digit) which, once duly combined, make up the information to be transmitted.

3 - 2 - Topology of the CAN-C (First assembly up to RPO number 13418)

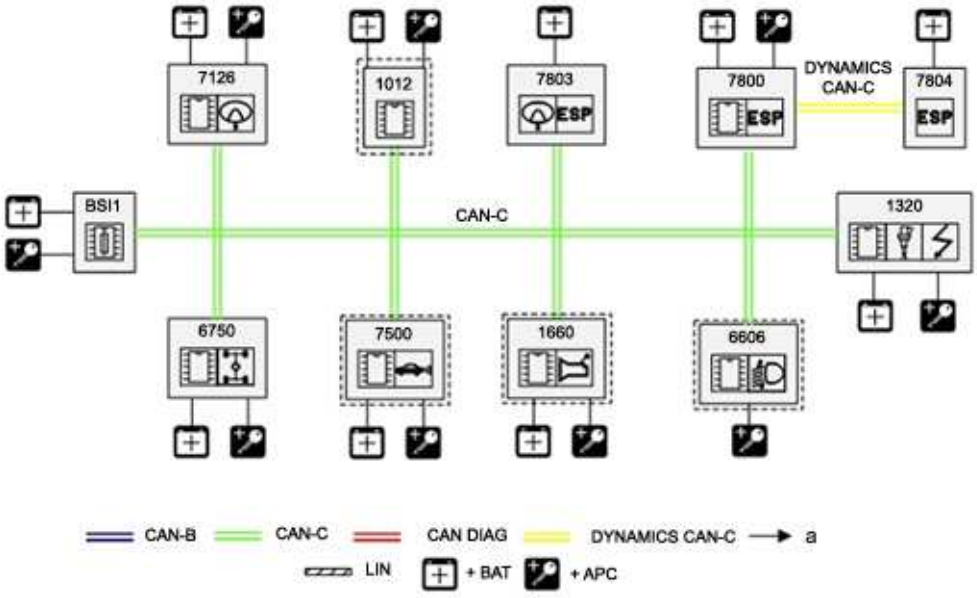

d4ea5mrd

"a" Wire connection.

Reference	Designation
BSI1	Built-in systems interface
1012 (*)	"stop & start" control ECU
1320	Engine ECU
1660 (*)	Continuously variable transmission ECU
6606 (*)	Driving headlamps ECU
6750	Rear final drive controlled clutch ECU
7126	Electric power steering ECU
7500 (*)	Parking assistance ECU
7800	Dynamic stability control ECU
7803	Steering wheel angle sensor
7804	Gyroscope accelerometer sensor
(*) According to version	

NOTE : The DYNAMICS CAN-C is exclusive to the communication between the gyrometer/accelerometer sensor and the dynamic stability control ECU

3 - 3 - Topology of the CAN-C (Second assembly from RPO number 13419)

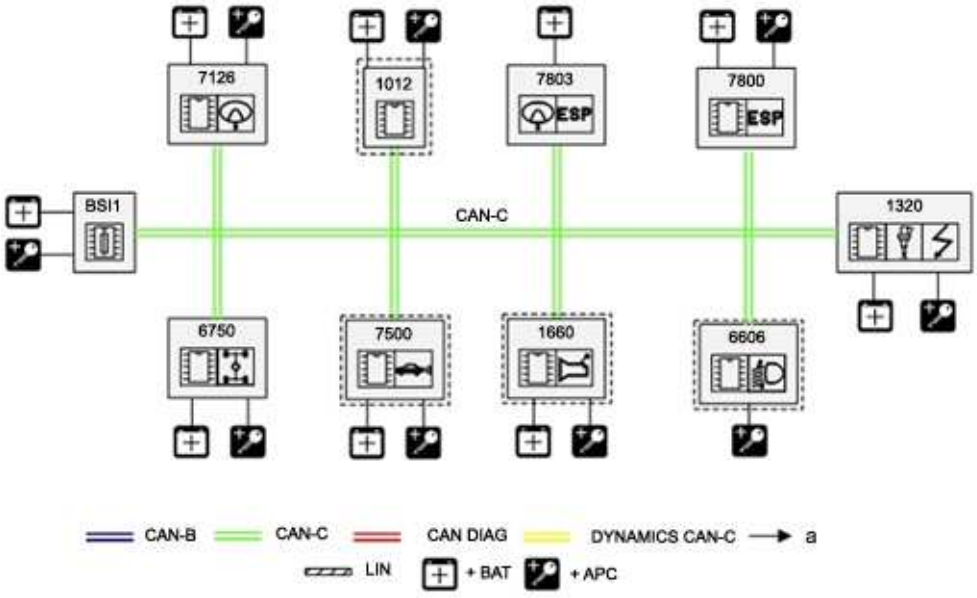

d4ea8u0d

"a" Wire connection.

Reference	Designation
BSI1	Built-in systems interface
1012 (*)	"stop & start" control ECU
1320	Engine ECU
1660 (*)	Continuously variable transmission ECU
6606 (*)	Driving headlamps ECU
6750	Rear final drive controlled clutch ECU
7126	Electric power steering ECU
7500 (*)	Parking assistance ECU
7800	Dynamic stability control ECU
7803	Steering wheel angle sensor
(*) According to version	

3 - 4 - Location of the ECUs of the CAN-C

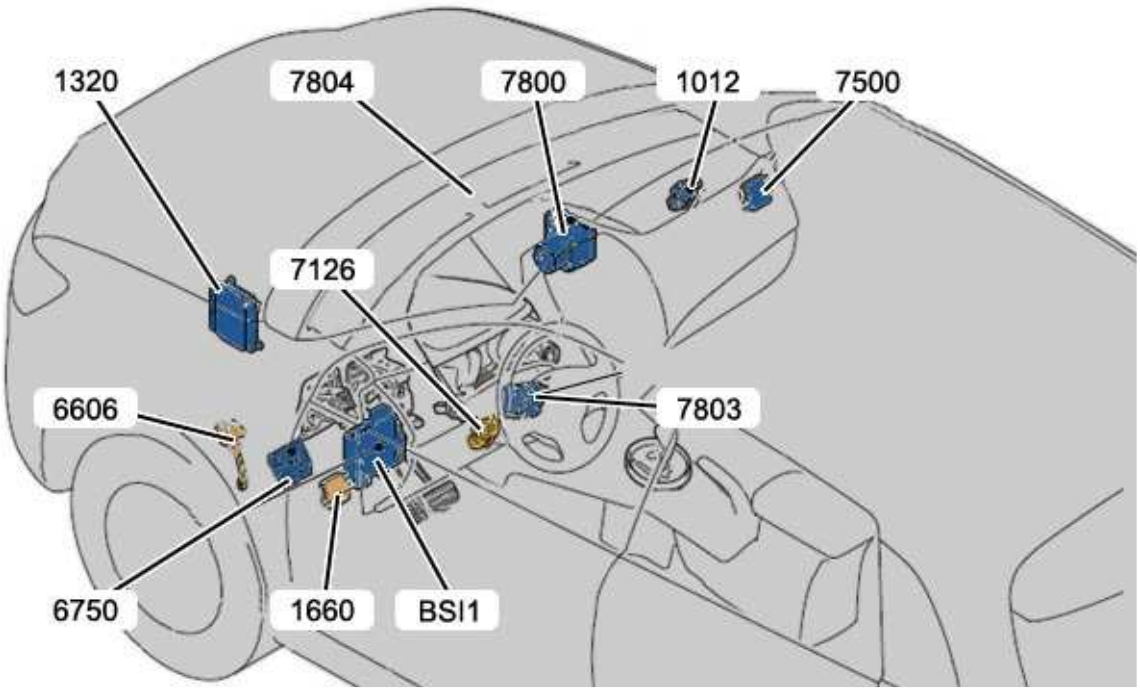

d4ea5msd

Reference	Designation
BSI1	Built-in systems interface
1012 (*)	"stop & start" control ECU
1320	Engine ECU
1660 (*)	Continuously variable transmission ECU
6606 (*)	Driving headlamps ECU
6750	Rear final drive controlled clutch ECU
7126	Electric power steering ECU
7500 (*)	Parking assistance ECU
7800	Dynamic stability control ECU
7803	Steering wheel angle sensor
7804 (*)	Gyroscope accelerometer sensor
(*) According to version	

4 - CAN-B NETWORK

4 - 1 - Presentation

The CAN-B consists of 2 electrical wires.

The transmission of the information on this pair of wires takes place by means of the transmission of two levels of voltage (volts), a high and a low associated respectively with the CAN-B High wire and the CAN-B Low wire.

The mathematical difference of these two levels of voltage generates two voltage values associated with the two logical levels 0 or 1.

> **NOTE :** As the CAN-B is "Fault Tolerant", the cutting of one of the two wires or a short circuit between the two CAN-B High and CAN-B Low wires permits network

communication, with the recording of fault information

4 - 2 - Topology of the CAN-B

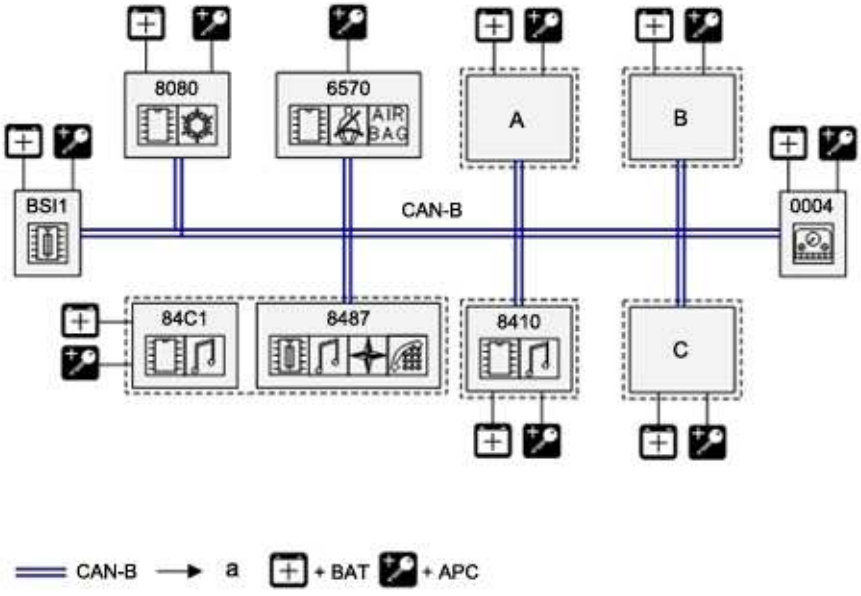

d4ea6scd

"a" Wire connection.

Reference	Designation
A (*)	Hands-free access control unit
B (*)	Control module transponder
BSI1	Built-in systems interface
C (*)	Hands-free starting unit
0004	Instrument panel
6570	Airbag ECU
8080	Air conditioning ECU
8410 (*)	Audio system
8487 (*)	Multimedia set
84C1 (*)	Multimedia interface unit
(*) According to version	

4 - 3 - Location of the ECUs of the CAN-B

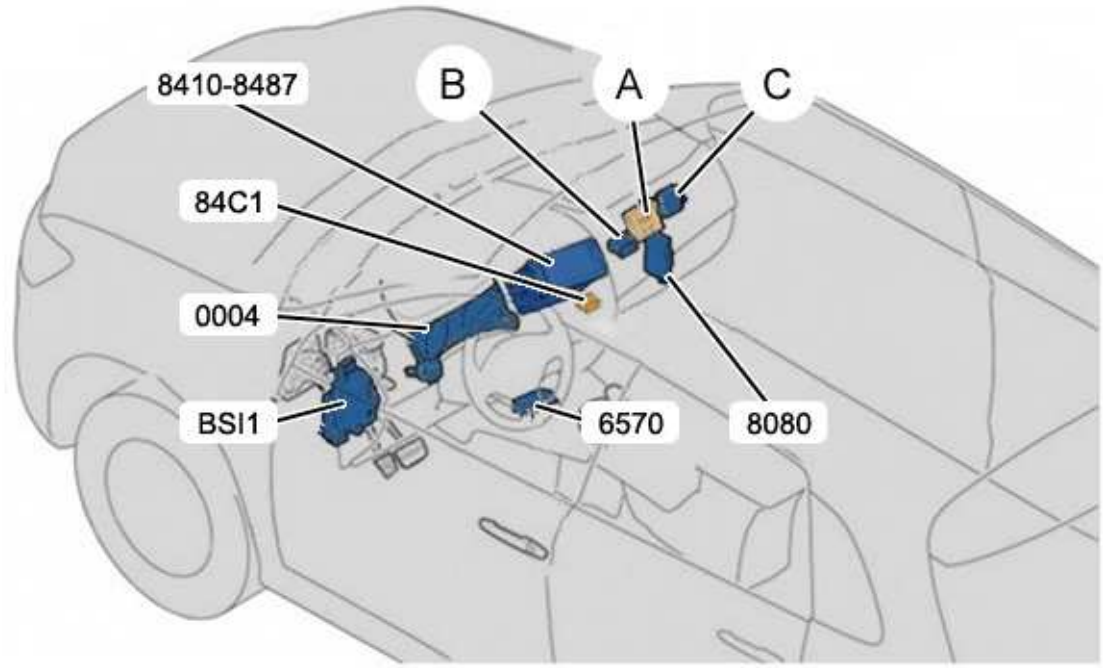

d4ea6sdd

Reference	Designation
A (*)	Hands-free access control unit
B (*)	Control module transponder
C	Hands-free starting unit
BSI1	Built-in systems interface
0004	Instrument panel
6570	Airbag ECU
8080	Air conditioning ECU
8410	Audio system
8487 (*)	Multimedia set
84C1 (*)	Multimedia interface unit
(*) According to version	

5 - REPRESENTATION OF THE CAN-C

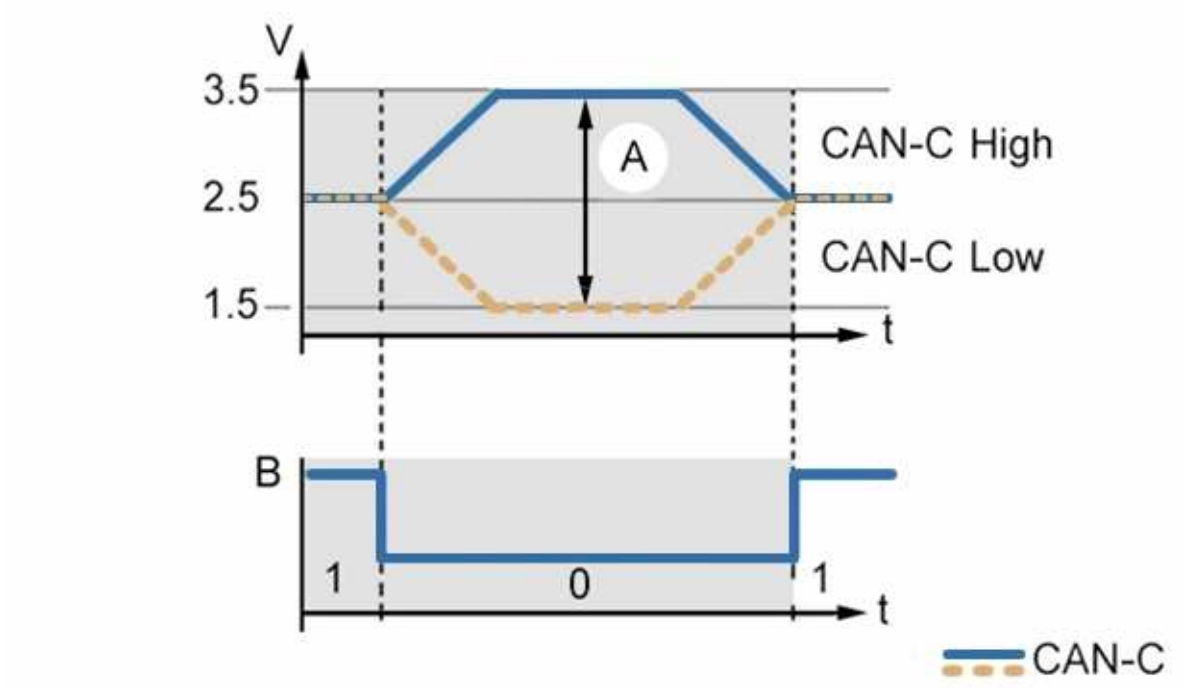

d4ea5mzd

Key :

- "A" Udiff : Difference in voltage between the two wires CAN-C High - CAN-C Low
- "B" Inter System CAN message (Status "0" or status "1")
- "V" Voltage in volts
- "t" Time scale

When the logical level is at (1), the status is called recessive.

When the logical level is at (0), the state is called dominant.

The network interface loses all possibility of dialogue when one of the following situations occurs on the CAN-C :

- Cutting of one of the two CAN wires ("High" and "Low")
- Short circuit between the two CAN wires ("High" and "Low")
- Short circuit of the CAN High cable or of the CAN Low cable to the ancillaries battery positive
- Short circuit of the CAN High cable or of the CAN Low cable to earth

5 - 1 - Priority in case of conflict betweeen transmissions

The system's protocol permits the management of overlapping problems when several ECUs wish to transmit a data stream simultaneously.

The ECU which transmits the non-priority message stops its transmission immediately to give way to the ECU bearing the priority message.

The priority message is, in effect, transmitted on the network without any interruption or delay.

The data stream which has priority of access wins the transmission on the bus.

A dominant level (0) always wins over a recessive level (1).

5 - 2 - CAN-C voltage level

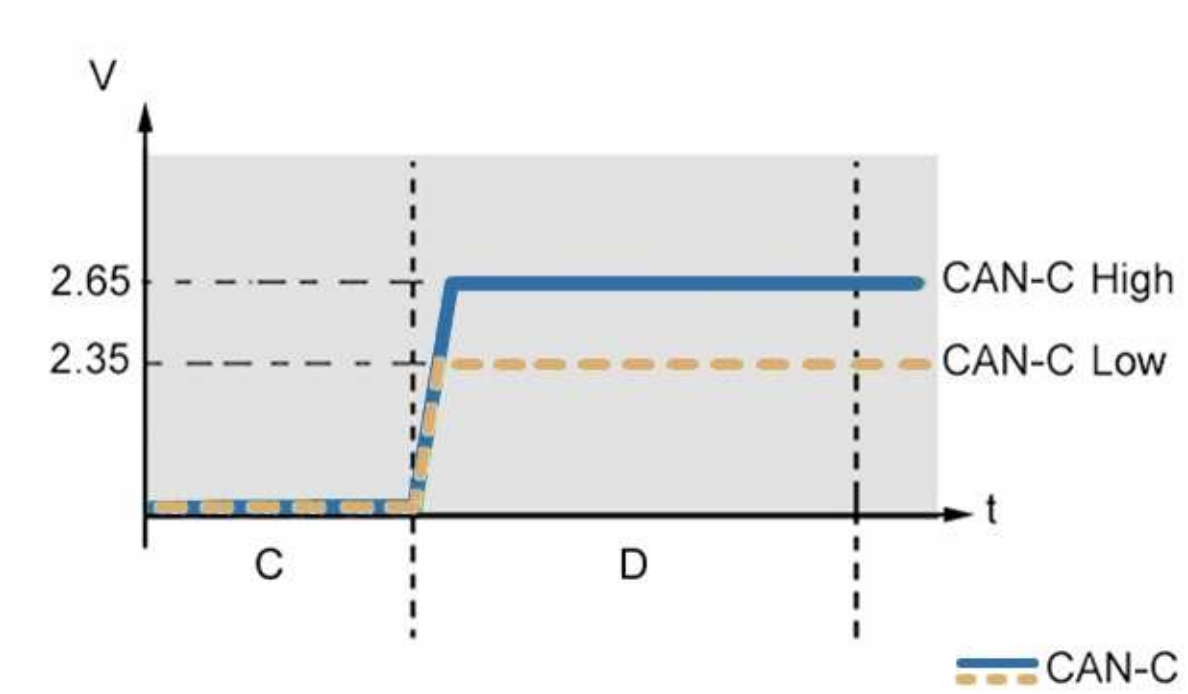

d4ea5n0d

Key :

- "C" CAN-C network on standby
- "D" CAN-C network active
- "V" Voltage in volts
- "t" Time scale

The Inter System CAN is characterised by its two average voltages during phases of network activity :

- CAN-C High : 2,65 V
- CAN-C Low : 2,35 V

The CAN-C is active when CAN-C High + CAN-C Low = 5 V.

NOTE : The voltage values represented are average voltages

5 - 3 - Content of the frames

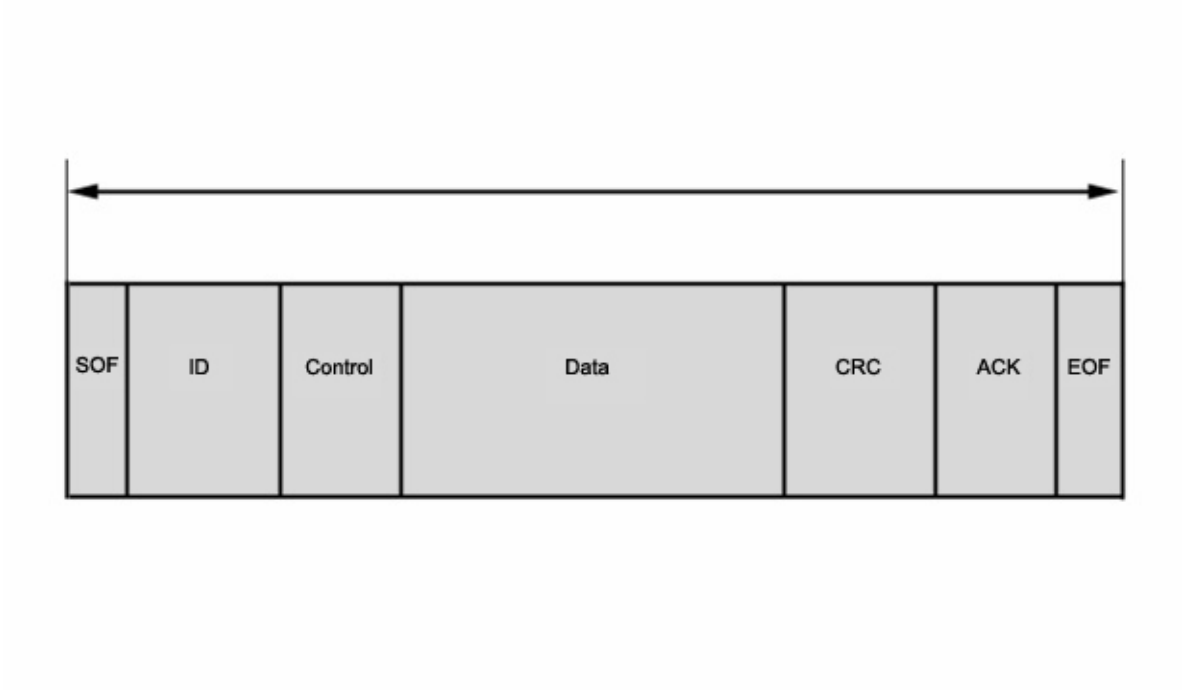

d4ea5n1d

The frames are made up of the following elements :

- "SOF" (Start of Frame)part: indication of the start of the frame
- "IUD" (Identifier) part: specification of the priority in the event of conflict
- "Control" part: specification of the type of frame, or of the length of the data...
- "Data" part: Values used for the data
- "CRC" (Cyclic Redundancy Check) part: check for errors in the data sent. The transmitting ECU carries out a redundancy calculation based on the transmitted data and stores the result. The receiving ECU detects the transmission errors by comparing the " CRC" part with the "Data" part
- "ACK" (Acknowledge) parts: acknowledgement of the reception of the data
- "EOF" (End Of Frame) part: indication of the end of the frame

6 - CAN-B NETWORK

6 - 1 - Presentation

The CAN-B consists of 2 electrical wires.

The transmission of the information on this pair of wires takes place by means of the transmission of two levels of voltage (volts), a high and a low associated respectively with the CAN-B High wire and the CAN-B Low wire.

The mathematical difference of these two levels of voltage generates two voltage values associated with the two logical levels 0 or 1.

> **NOTE :** As the CAN-B is "Fault Tolerant", the cutting of one of the two wires or a short circuit between the two CAN-B High and CAN-B Low wires permits network communication, with the recording of fault information

6 - 2 - CAN-B representation

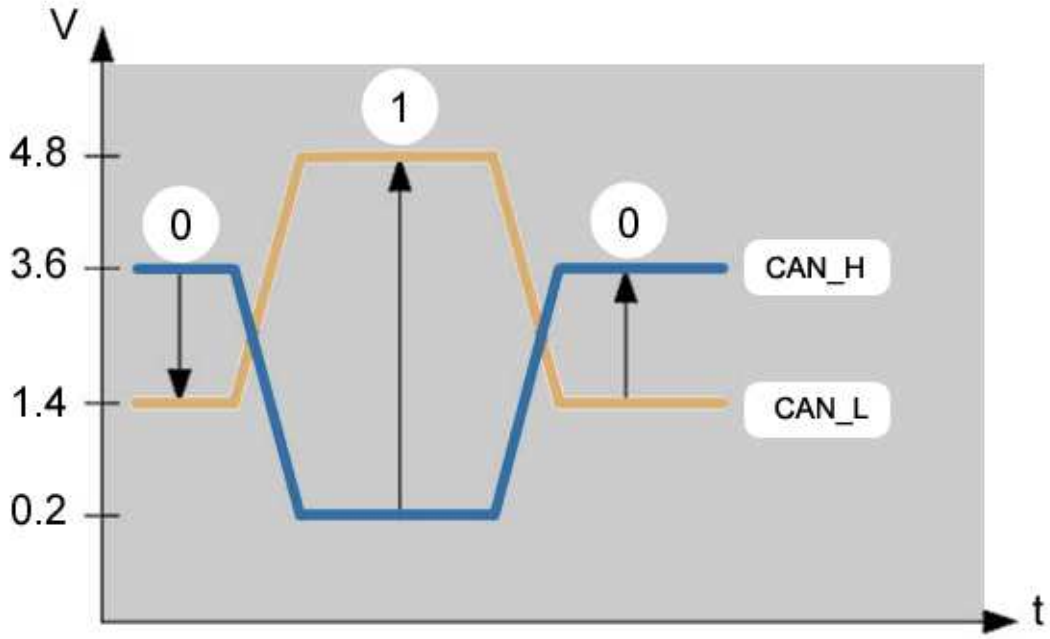

d4ea5n2d

Key :

- "V" Voltage in volts
- "T" Time scale

CAN-B High voltage - CAN-B Low voltage = 3,6 V - 1,4 V = + 2,2 V (Logic level 0).

CAN-B High voltage - CAN-B Low voltage = 0,2 V - 4,8 V = - 4,6 V (Logic level 1).

When the logical level is at "1", the status is called recessive ; When the logical level is at "0", the state is called dominant.

NOTE : The voltage values represented are average voltages

6 - 3 - CAN-B voltage level

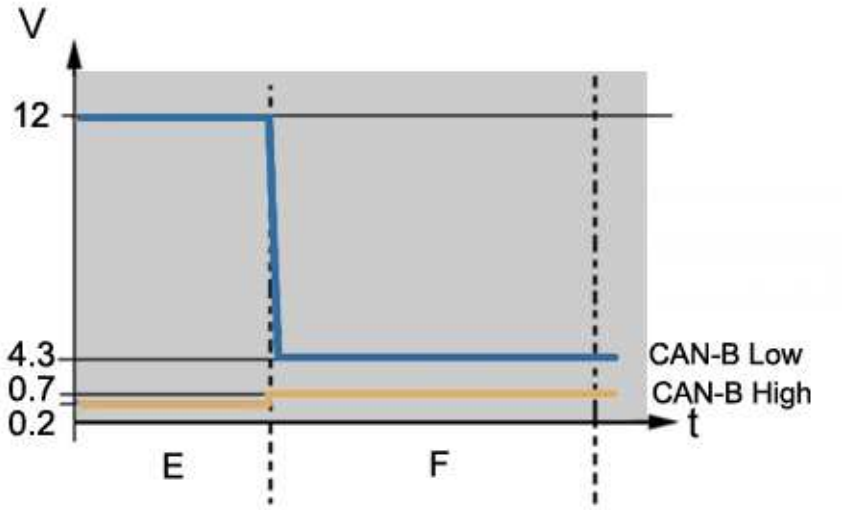

d4ea5n3d

Key :

- "V" Voltage in volts
- "T" Time scale
- "E" Network CAN-B dormant
- "F" CAN-B network active

NOTE : The voltage values represented are average voltages

7 - LIN

7 - 1 - Presentation

The LIN network consists of two wires, the first dedicated to data transmission, the second for the electrical supply.

The LIN network is a so-called "master-slave" network.

Only the Built-in Systems Interface is a master ECU and the other ECUs (slaves) can only respond to a request from the BSI.

Network LIN communicates in the following way :

- The master ECU carries out master and slave tasks, the slave ECU carry out the slave tasks
- When the master ECU carries out a master task, the frame, the header of which contains the task command information of the slave ECUs, is transmitted at regular intervals
- When the master ECU and a slave ECU carry out a slave task, the ECU called by the frame header sends a response that contains control data (the header and the response make up a message frame)
- The communication data is sent in blocks of groups of 10-bit data which contain a start bit and a

stop bit

7 - 2 - Topology of the LIN (First assembly up to RPO number 13418)

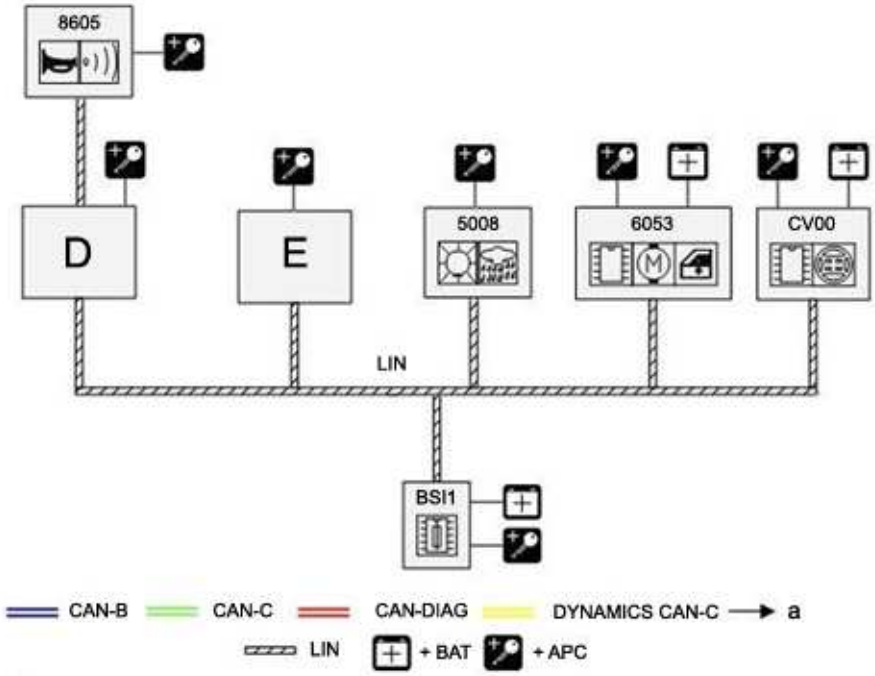

d4ea5n4d

"a" Wire connection.

Reference	Designation
BSI1	Built-in systems interface
CV00	Steering wheel controls
D	Alarm siren control unit
E	Ultrasonic sensor
5008	Brightness sensor
6053	Driver's door electric window and locking control pad
8605	Alarm siren

7 - 3 - Topology of the LIN (Second assembly from RPO number 13419)

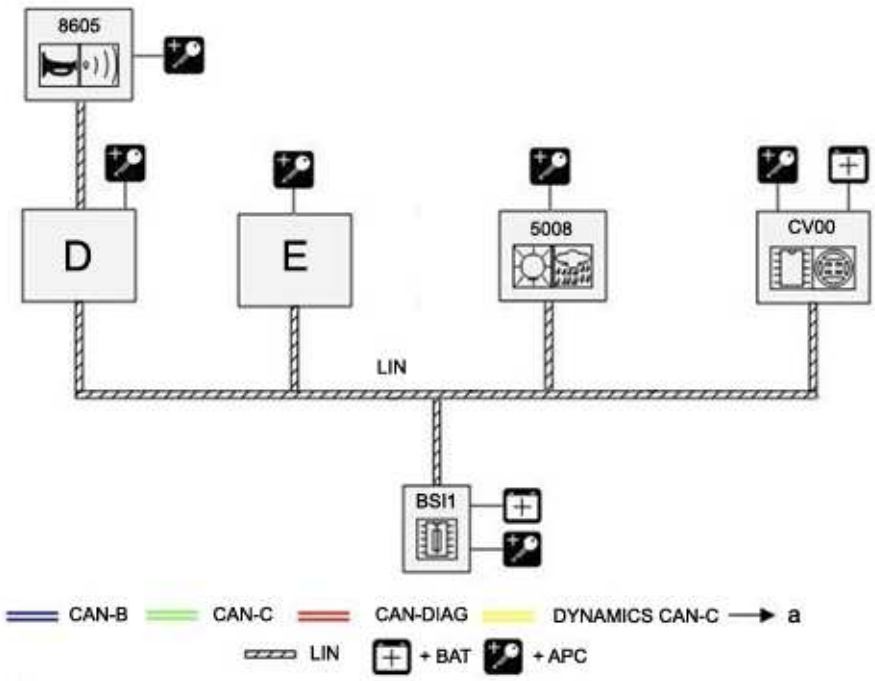

d4ea8u1d

"a" Wire connection.

Reference	Designation
BSI1	Built-in systems interface
CV00	Steering wheel controls
D	Alarm siren control unit
E	Ultrasonic sensor
5008	Brightness sensor
8605	Alarm siren

7 - 4 - Location of the ECUs of the LIN

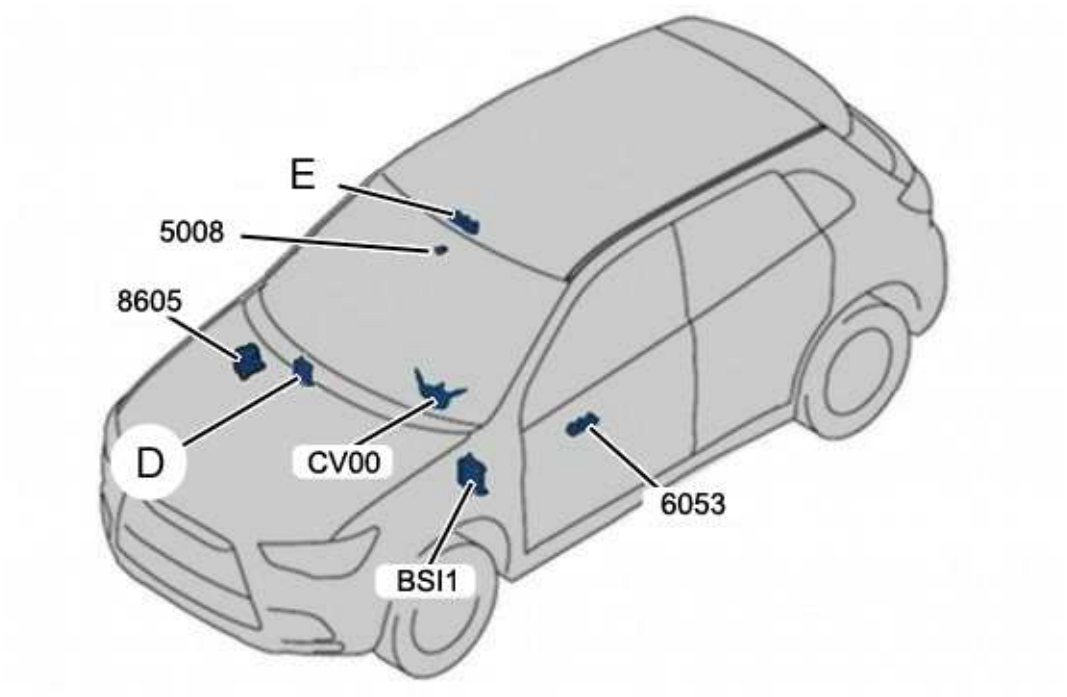

d4ea5n6d

Reference	Designation
BSI1	Built-in systems interface
CV00	Steering wheel controls
D	Alarm siren control unit
E	Ultrasonic sensor
5008	Brightness sensor
6053 (*)	Driver's door electric window and locking control pad
8605	Alarm siren
(*) According to version	

7 - 5 - LIN voltage level

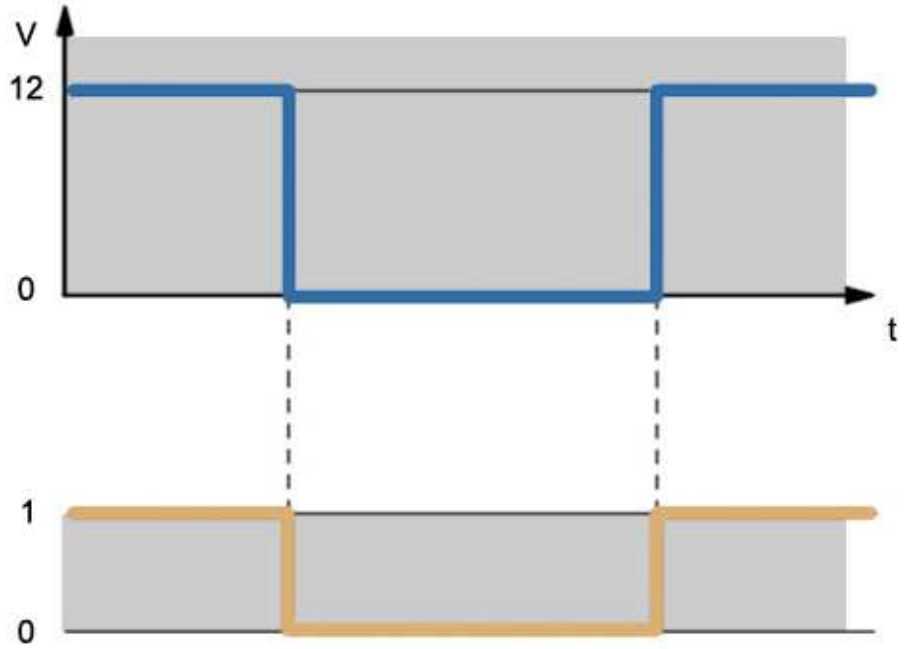

d4ea5n9d

Key :

- "V" Voltage in volts
- "T" Time scale

When each ECU sends or receives signals, the voltage of network LIN varies as follows :

- The voltage of the LIN varies between the voltage of the ancillaries battery (recessive status) and the earth (dominant status) producing the control signal
- If communication is not established, the LIN status remains recessive (ancillaries battery voltage)

NOTE : The voltage values represented are average voltages

8 - DIAGNOSTIC SOCKET (C001)

8 - 1 - Role

The diagnostic socket (C001) permits connection of the after sales tool to the vehicle and communication with all of the vehicle's ECUs.

8 - 2 - Location

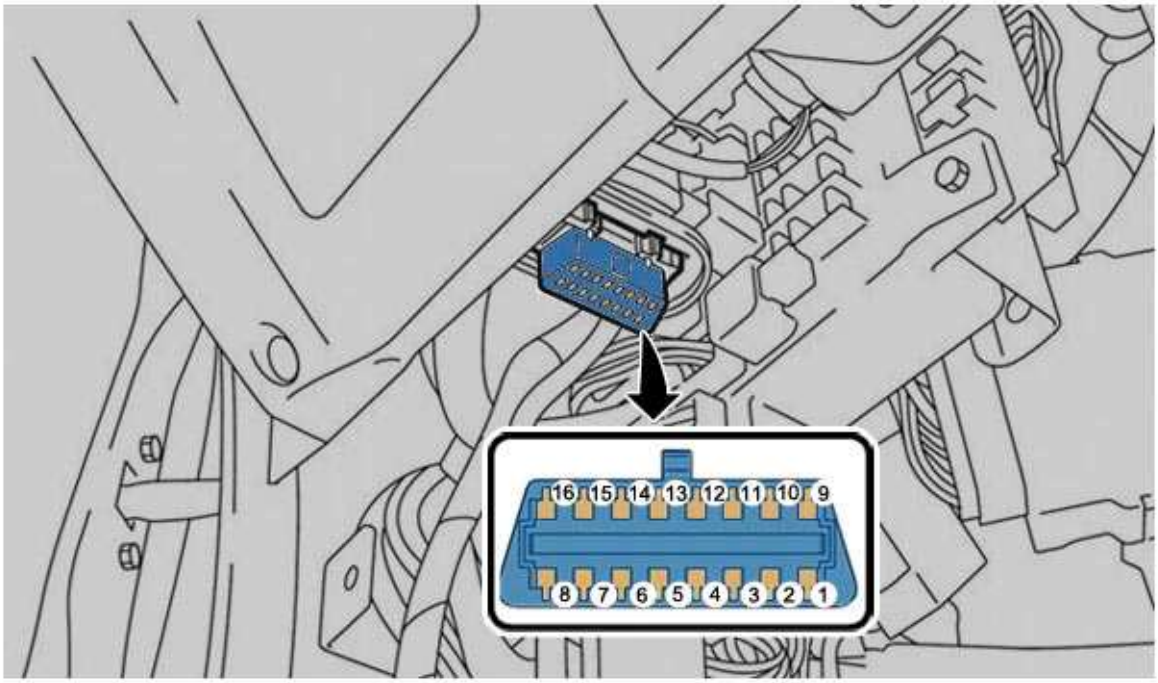

d4ea5nad

The diagnostic socket (16-way black connector) is located below the dashboard, on the driver's side (Near the built-in systems interface).

Channel number	Signal
1	Diagnostic check
2	Channel not connected
3	Channel not connected
4	Earth
5	Earth
6	CAN-C DIAG H (High)
7	EOBD : European On Board Diagnosis, diagnosis of anti-pollution equipment
8	Channel not connected
9	Channel not connected
10	Checking : Press
11	Channel not connected
12	Channel not connected
13	Channel not connected
14	CAN-C DIAG L (Low)
15	Channel not connected
16	Service battery positive

9 - CAN-C DIAG NETWORK

The transmission speed of the CAN-C DIAG network is 500 kbits/s.

Functions of the CAN-C DIAG.

Downloading of the software of the ECUs present on the CAN-C.

Returning of the information necessary for the EOBD (European On Board Diagnosis) standard permitting checking of the emission control information.

9 - 1 - Downloading

The CAN-C DIAG multiplexed network is specially integrated in the multiplexed architecture of the vehicle to download the software of the ECUs of the CAN.

9 - 2 - EOBD (European On Board Diagnosis) fault reading

The multiplexed CAN-C DIAG permits reading of the information incorporated in the engine management ECU by the statutory tool "SCANTOOL" and fulfils the statutory diagnostics requirement concerning pollutant emissions.

OPERATING METHODS : ENGINE IMMOBILISER

1 - FUNCTION AND INSTALLATION

Engine immobiliser (Without hands free access and starting).

Engine immobiliser (With hands-free access and starting).

2 - MAN/MACHINE INTERFACE

Engine immobiliser (Without hands free access and starting).

Engine immobiliser (With hands-free access and starting).

3 - DESCRIPTION OF OPERATION : SENSOR

Transponder coil.

4 - DESCRIPTION OF OPERATION : ACTUATOR

Not applicable.

5 - DESCRIPTION OF OPERATION : COMPUTER

Not applicable.

6 - FLOW CHART

Remote control battery warning (With hands-free access and starting).

Engine immobiliser (Without hands-free starting and access).

Hands free starting.

7 - FUNCTION

Engine immobiliser.

FUNCTION AND INSTALLATION : ENGINE IMMOBILISER (WITHOUT KEYLESS ACCESS AND STARTING)

1 - ROLE

Role of the engine immobiliser :

- Recognition of the high frequency remote control
- Control of locking / unlocking the engine management ECU

2 - LOCATION

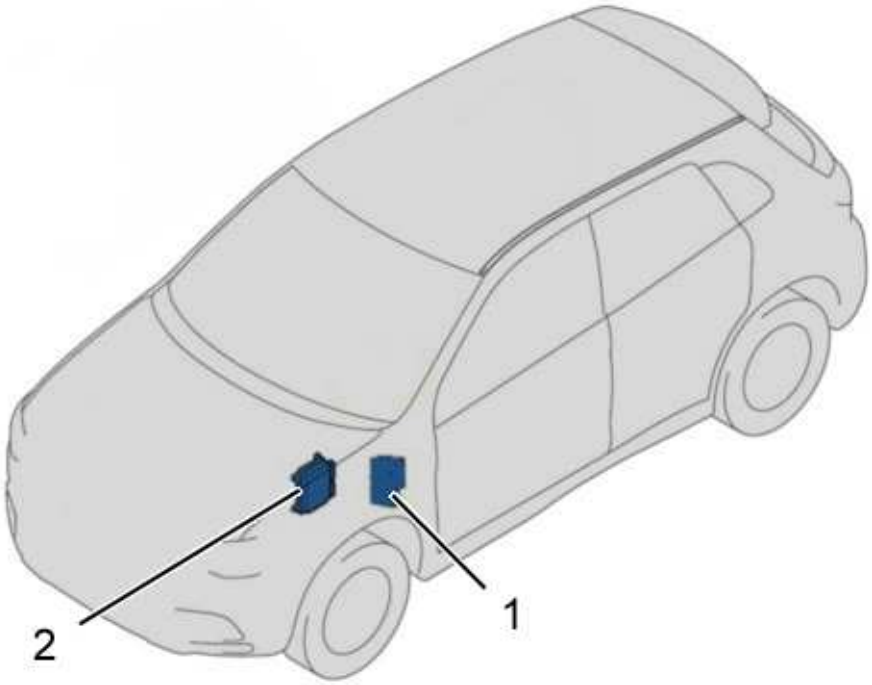

e1aa0cod

(1) Built-in systems interface .

(2) Engine ECU.

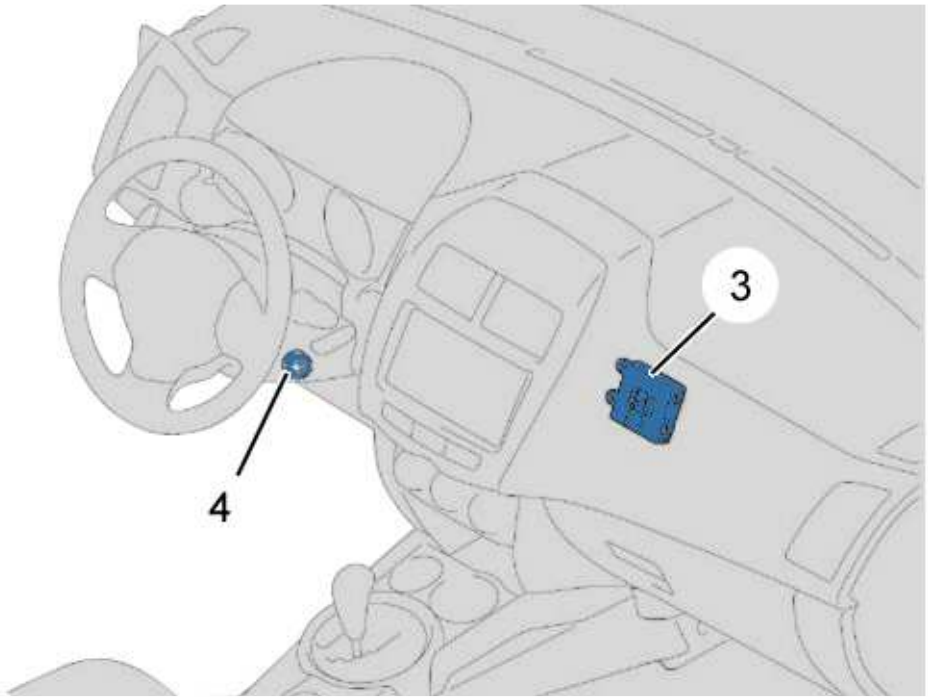

c5fa09cd

(3) Immobiliser unit.

(4) Transponder coil.

FUNCTION AND INSTALLATION : ENGINE IMMOBILISER (WITH KEYLESS ACCESS AND STARTING)

1 - ROLE

Role of the engine immobiliser :

- Recognition of the hands-free identifier transponder
- Control of locking / unlocking the engine management ECU

2 - LOCATION

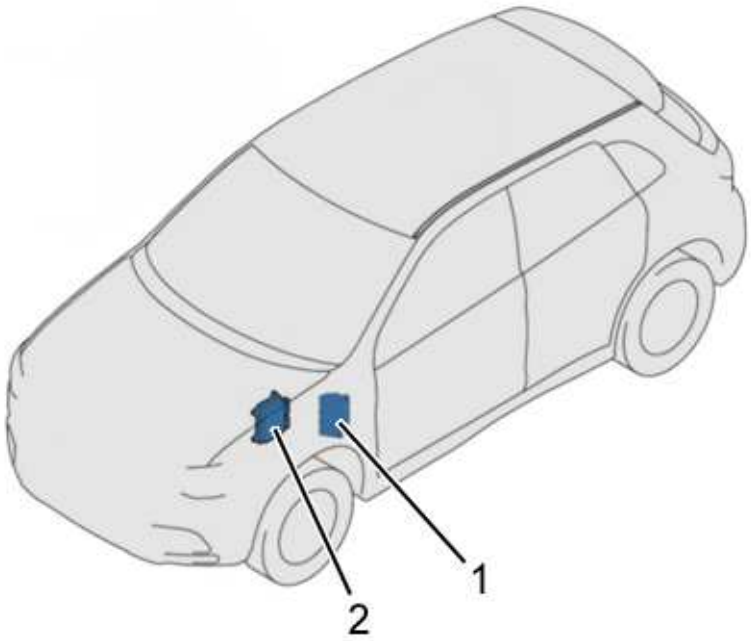

d4ea620d

(1) Built-in systems interface .

(2) Engine ECU.

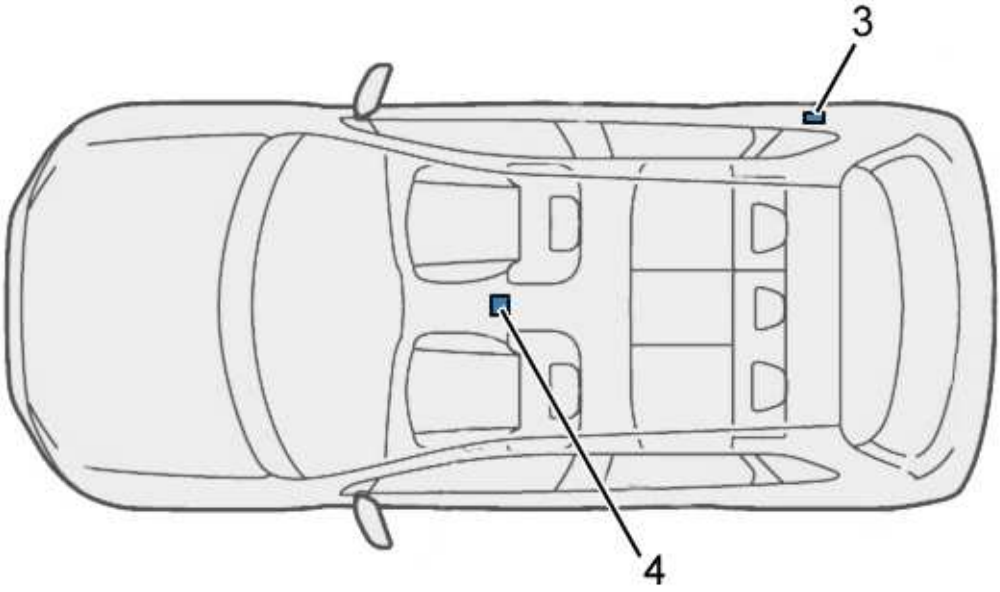

d4ea621d

(3) Central interior aerial.

(4) Boot interior aerial.

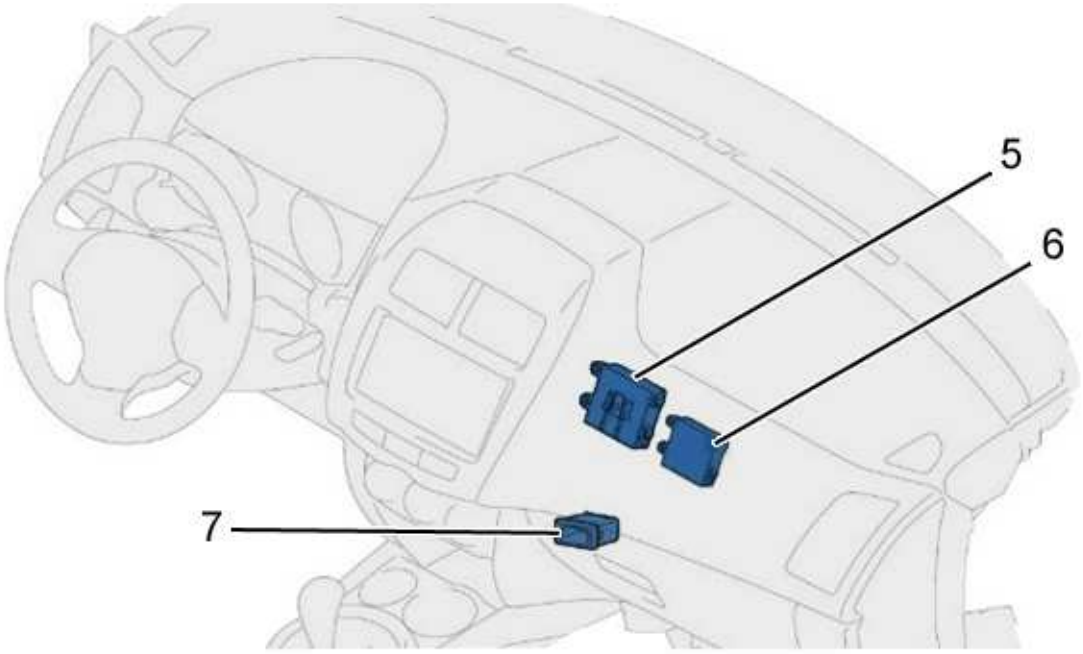

d4ea622d

(5) Hands free starter access ECU (Hands-free access).

(6) Hands free starter access ECU (Hands-free starting).

(7) Electronic key reader.

MAN/MACHINE INTERFACE : ENGINE IMMOBILISER (WITHOUT KEYLESS ACCESS AND STARTING)

1 - ACTIVATION / DEACTIVATION / ADJUSTMENTS

1 - 1 - Activation

The driver triggers the high frequency remote control transponder identification procedure when he inserts the mechanical key of the high frequency control in the ignition switch and switches on the ignition.

1 - 2 - Deactivation

It is not possible to deactivate the immobiliser function.

2 - PARAMETER SETTING

Not applicable.

3 - PRESENTATION OF THE SYSTEM INFORMATION

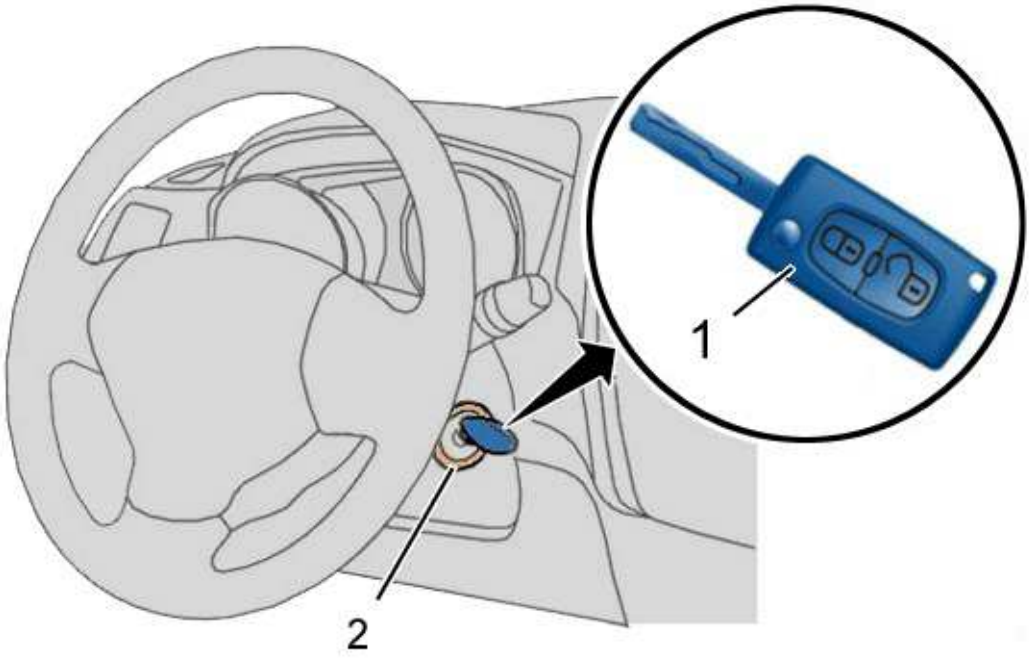

c5fa09ed

(1) High frequency remote control.

(2) Transponder coil.

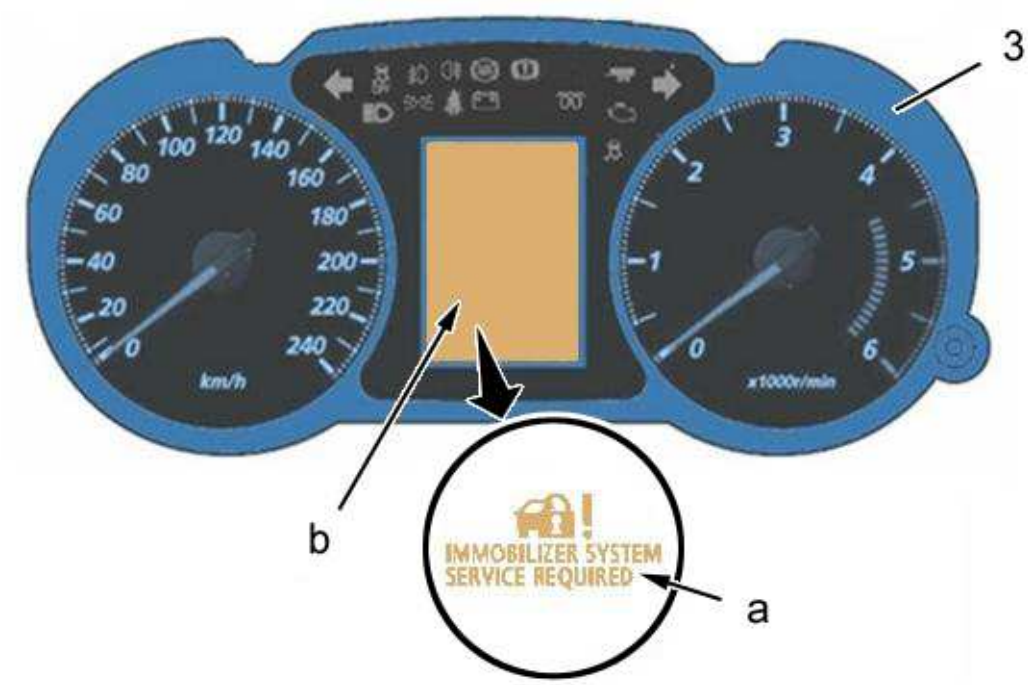

c5fa09fd

(3) Instrument panel.

"a" "SERVICE" message.

"b" Matrix screen on the instrument panel.

Signalling of the appearance of an immobiliser fault :

- Display of a message on the instrument panel matrix screen
- Emission of a sound alert

MAN/MACHINE INTERFACE : ENGINE IMMOBILISER (WITH KEYLESS ACCESS AND STARTING)

1 - ACTIVATION / DEACTIVATION / ADJUSTMENTS

1 - 1 - Activation

The driver triggers the hands-free identifier transponder identification procedure in the following cases :

- On pressing the engine starting switch
- On inserting the hands-free identifier in the electronic key reader and pressing the engine starting switch

1 - 2 - Deactivation

It is not possible to deactivate the immobiliser function.

2 - PARAMETER SETTING

Not applicable.

3 - PRESENTATION OF THE SYSTEM INFORMATION

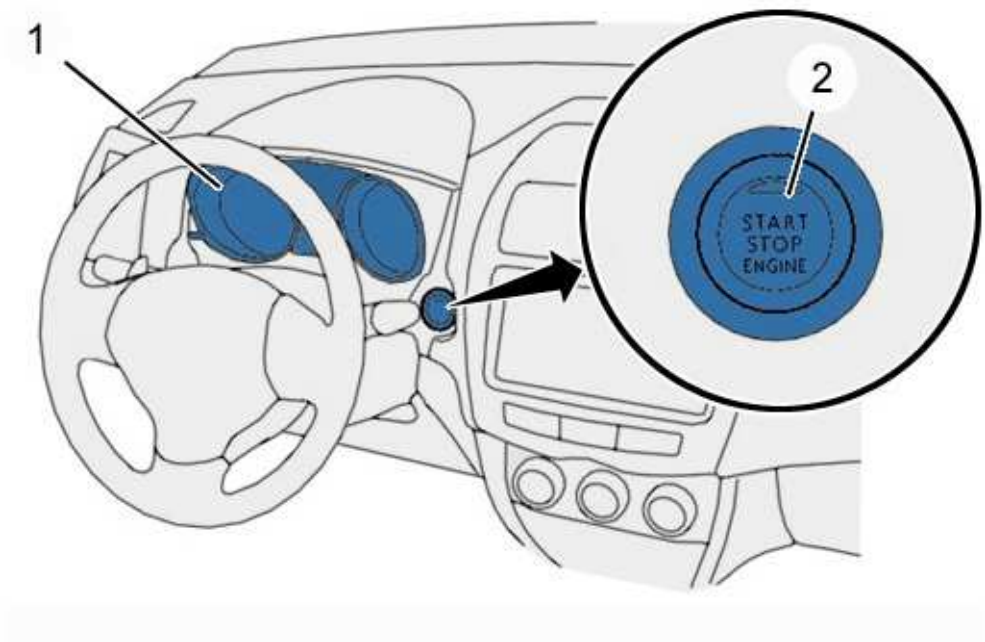

d4ea631d

(1) Instrument panel .

(2) Engine starting switch.

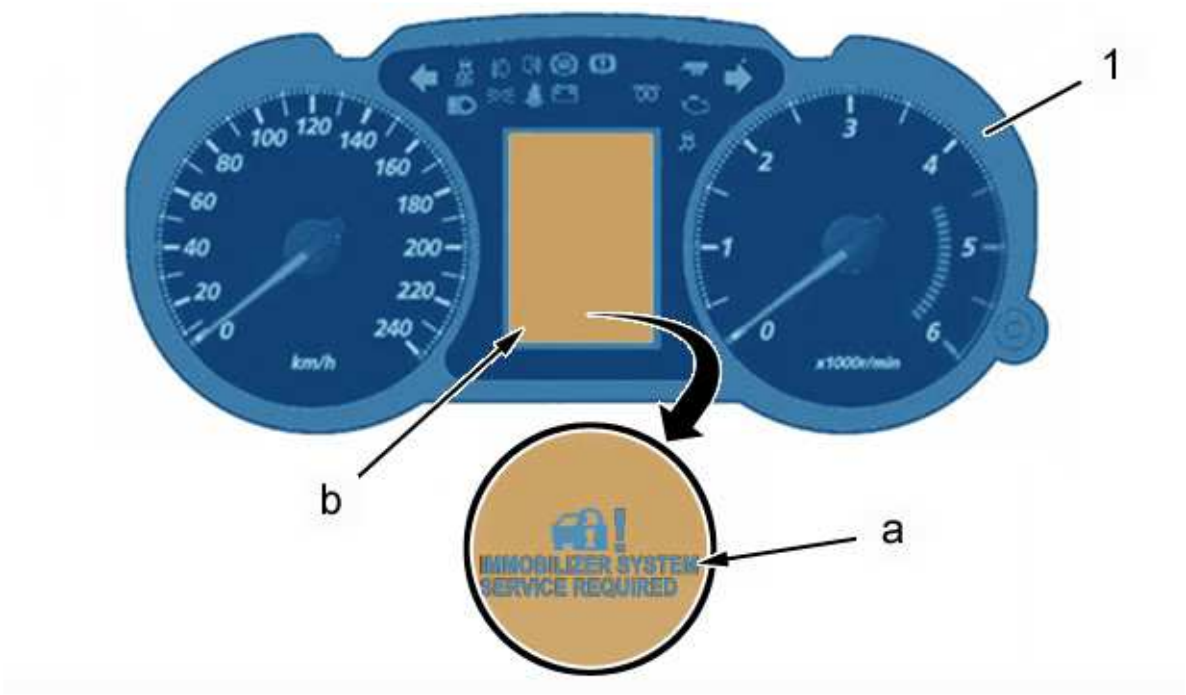

d4ea632d

(1) Instrument panel .

"a" Message "SERVICE".

"b" Matrix screen on the instrument panel.

Signalling of the appearance of an immobiliser fault :

- Display of a message on the instrument panel matrix screen
- Emission of a sound alert

DESCRIPTION - FUNCTION : TRANSPONDER COIL

1 - DESCRIPTION

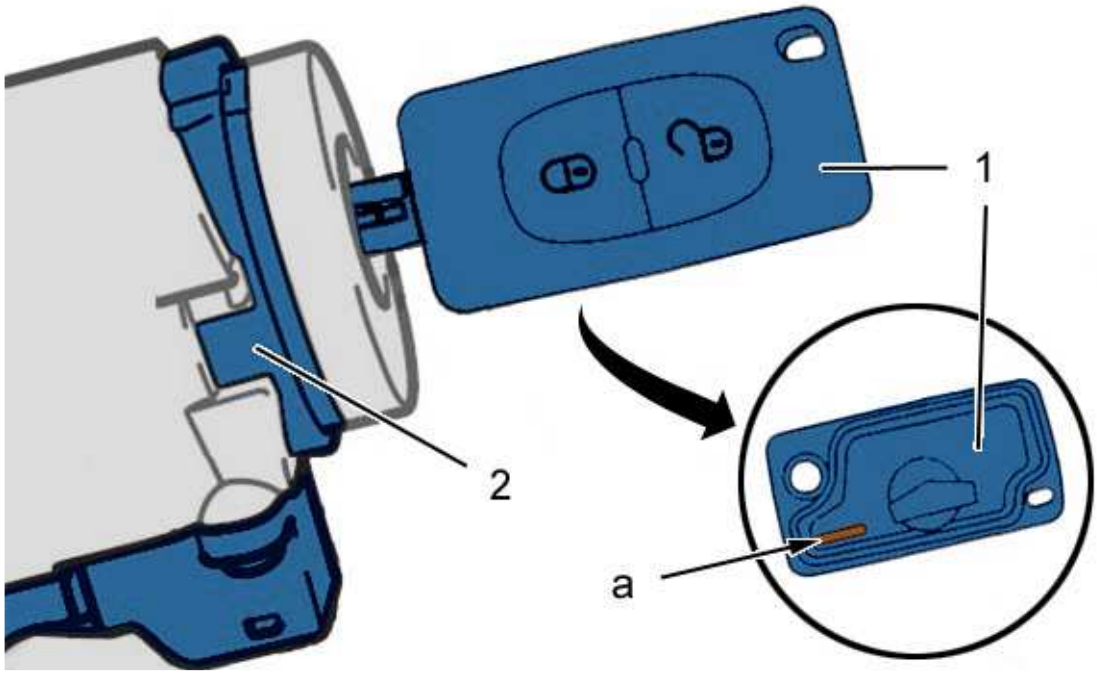

d4ea61rd

(1) Ignition key with integral transponder.

(2) Transponder coil with integral key recall switch.

"a" Ignition key transponder.

2 - ROLE

The transponder coil permits a dialogue between the transponder label on the ignition key and the immobiliser control unit.

3 - FUNCTION

Once the ignition key is inserted in the ignition switch and then the ignition is turned on, the immobiliser control unit sends an identification request to the ignition key via the transponder coil.

The transponder coil transmits the message to the ignition key transponder in the form of a radiofrequency signal.

The ignition key transponder replies by sending its own transponder identifier.

4 - ELECTRICAL FEATURES

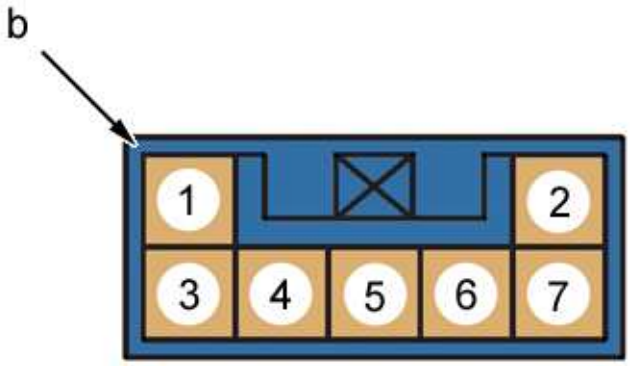

d4ea61sd

"b" 7 way connector	
Number of channels	Allocation of channels of connector
1	Lighting of ignition switch (-)
2	Lighting of ignition switch (+)
3	Aerial (-)
4	Key recall switch (earth)
5	Channel not connected
6	Key recall switch (To the BSI)
7	Aerial (+)

5 - LEARNING

Not applicable.

FLOW CHART : REMOTE CONTROL BATTERY WARNING (WITH KEYLESS ACCESS AND STARTING)

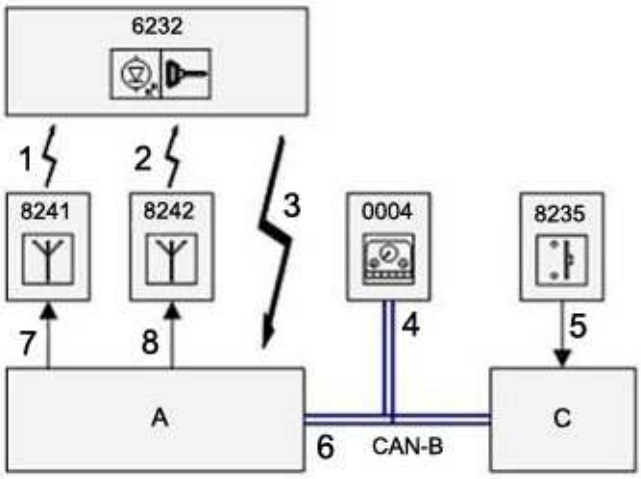

d4ea926d

Key : diagram symbols.

Components description table	
Components	Designation
A	Hands free starter access ECU (Hands-free access)
C	Hands free starter access ECU (Hands-free starting)
0004	Instrument panel
6232	High frequency remote control or hands-free identifier
8235	Engine starting switch
8241	Fascia panel interior aerial
8242	Central interior aerial

Description of the exchanges of information			
Connection number	signal	Signal transmitter/receiv	Nature of signal
1	Search for the hands-free identifier by the dashboard interior aerial	8241 / 6232	Low frequency connection
2	Search for the hands-free identifier by the central interior aerial	8242 / 6232	Low frequency connection
3	Hands-free identifier battery low information	6232 / A	Low frequency connection
	Response from the hands-free identifier		
	Request to display the symbol and		

4	the warning message "hands-free identifier battery low"	A / 0004	B CAN
5	Engine starting switch information	8235 / C	By wire
6	Engine starting switch information	C / A	B CAN
7	Dashboard interior aerial control	A / 8241	By wire
8	Central interior aerial control	A / 8242	By wire

FLOW CHART : ENGINE IMMOBILISER (WITHOUT KEYLESS ACCESS AND STARTING)

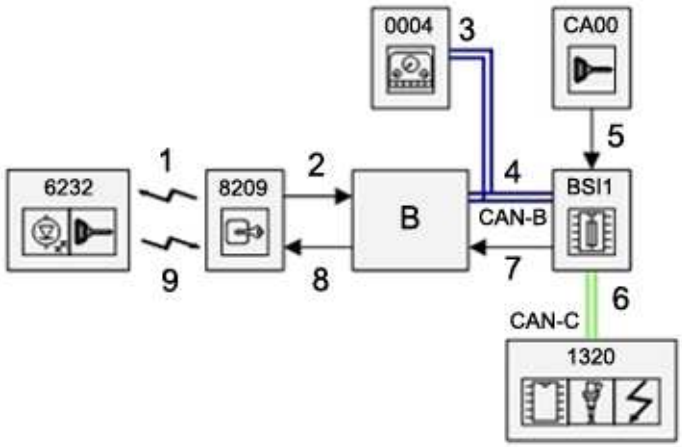

d4ea924d

Key : diagram symbols.

Components description table	
element	Designation
B	Immobiliser unit
BSI1	Built-in systems interface
CA00	Ignition switch
0004	Instrument panel
1320	Engine ECU
6232	High frequency remote control or hands-free identifier
8209	Transponder coil

Connection number	Signal	Signal transmitter/receiver	Nature of signal
1	High frequency remote control transponder identification request	8209 / 6232	Radio frequency connection
2	Transmission of the high frequency remote control transponder identifier	8209 / B	By wire
3	Request for display of transponder fault message	B / 0004	B CAN
4	High frequency remote control transponder identification request	B / BSI1	B CAN
5	Ignition switch position	CA00 / BSI1	Wire connection
6	High frequency remote control transponder identification request	BSI1 / 1320	C CAN
7	Ignition switch position	BSI1 / B	By wire

8	High frequency remote control transponder identification request	B / 8209	By wire
9	Transmission of the high frequency remote control transponder identifier	6232 / 8209	Radio frequency connection

FLOW CHART : HANDS-FREE STARTING

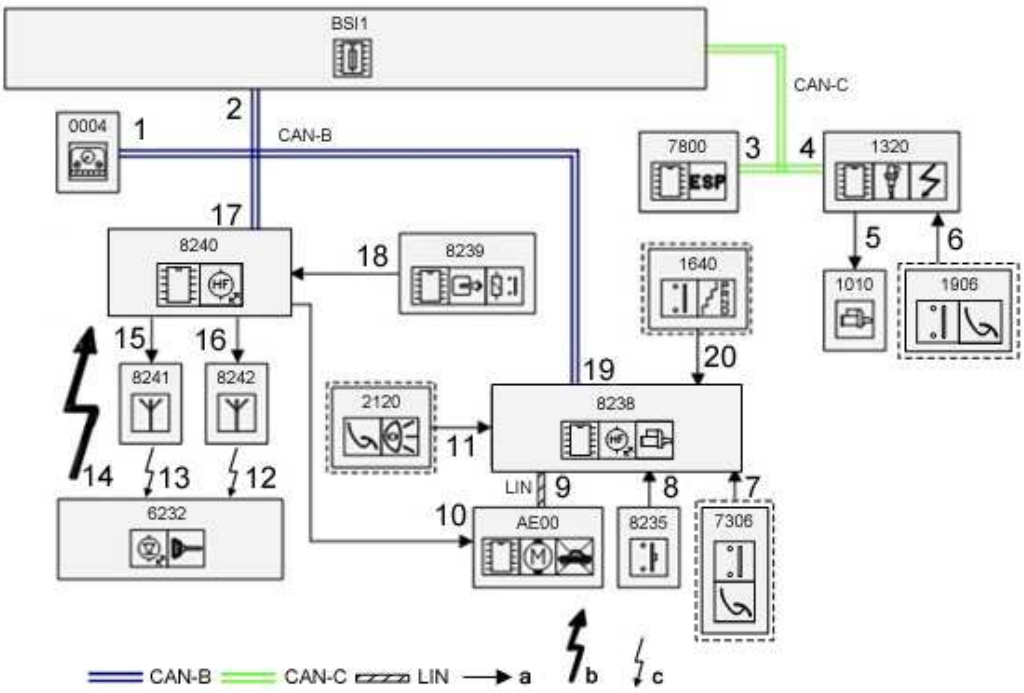

d4ea6skd

Components description table	
element	Designation
AE00	Electric steering lock
BSI1	Built-in systems interface
0004	Instrument panel
1010	Starter
1320	Engine ECU
1640 (*)	Continuously variable transmission programme selector
1906 (*)	Clutch interlocking switch
2120 (*)	Brake dual-function switch
6232	High frequency remote control or hands-free identifier
7306 (*)	Clutch switch
7800	Dynamic stability control ECU
8235	Engine starting switch
8238	Hands-free starting unit
8239	Electronic key reader
8240	Hands-free access control unit
8241	Fascia panel interior aerial (Interior aerial located in the centre console)
8242	Central interior aerial (Interior aerial located in the boot)
(*) According to version	

Description of the exchanges of information			
No. of link	signal	Signal transmitter/receiver	Nature of signal
	Request to display the hands-free starting function fault message		

1	Request to display the electric steering lock fault message	BSI1 / 0004	B CAN
	Request to display the hands-free identifier absent message		
	Request to display the hands-free identifier battery low warning message		
2	Engine starting request	8238 / BSI1	B CAN
	Gear selection lever position information (*)		
	Clutch pedal switch information (*)		
	Information specifying the press on the brake pedal (*)		
	Engine starting switch information		
	Hands-free starting function fault information		
	Electric steering lock system fault information		
	Door status information	BSI1/ 8238	
	Vehicle speed information		
	Pre-post heating status (*)		
	Request to display the hands-free starting function fault message	BSI1 / 0004	
	Request to display the electric steering lock fault message		
	Request to display the hands-free identifier absent message		
	Request to display the hands-free identifier battery low warning message		
3	Vehicle speed information	7800 / BSI1	C CAN
4	Engine running information	1320 / BSI1	C CAN
	Pre-post heating status		
	Clutch interlocking switch information (*)		
	Engine starting authorisation	BSI1/ 1320	
5	Starter solenoid control	1320 / 1010	By wire
6 (*)	Clutch interlocking switch information	1906 / 1320	By wire
7 (*)	Clutch switch information	7306 / 8238	By wire
8	Engine starting switch information	8235 / 8238	By wire
9	Electric steering lock status information	AE00 / 8238	LIN
	Electric steering lock locking/unlocking control	8238 / AE00	
10	Electric steering lock unlocking autorisation	8240 / AE00	By wire

11 (*)	Information on depressing the brake pedal	2120 / 8238	By wire
12	Search for the hands-free identifier by the central interior aerial (Interior aerial located in the boot)	8242 / 6232	Low frequency connection
13	Search for the hands-free identifier by the dashboard interior aerial (Interior aerial located in the centre console)	8241 / 6232	Low frequency connection
14	Response from the hands-free identifier	6232 / 8240	High frequency link
15	Dashboard interior aerial control (Interior aerial located in the centre console)	8240 / 8241	By wire
16	Central interior aerial control (Interior aerial located in the boot)	8240 / 8242	By wire
17	Hands-free identifier signal present	8240 / 8238	B CAN
	Request for identification of the hands-free identifier transponder		
	Response from the hands-free identifier transponder	8238 / 8240	
18	Identification of the hands-free identifier transponder	8239 / 8240	By wire
	Status of electronic key reader starting request		
19	Engine starting request	8238 / BSI1	B CAN
	Gear lever position information (*)		
	Clutch switch information (*)		
	Brake dual-function switch information (*)		
	Engine starting switch information		
	Hands-free starting function fault information		
	Electric steering lock system fault information		
	Side doors status information	BSI1/ 8238	
	Vehicle speed information		
	Pre-post heating status (*)		
20 (*)	Gear lever position information	1640 / 8238	By wire
(*) According to version			

FUNCTION : IMMOBILISER

1 - FUNCTION : IMMOBILISER (WITHOUT HANDS-FREE STARTING AND ACCESS)

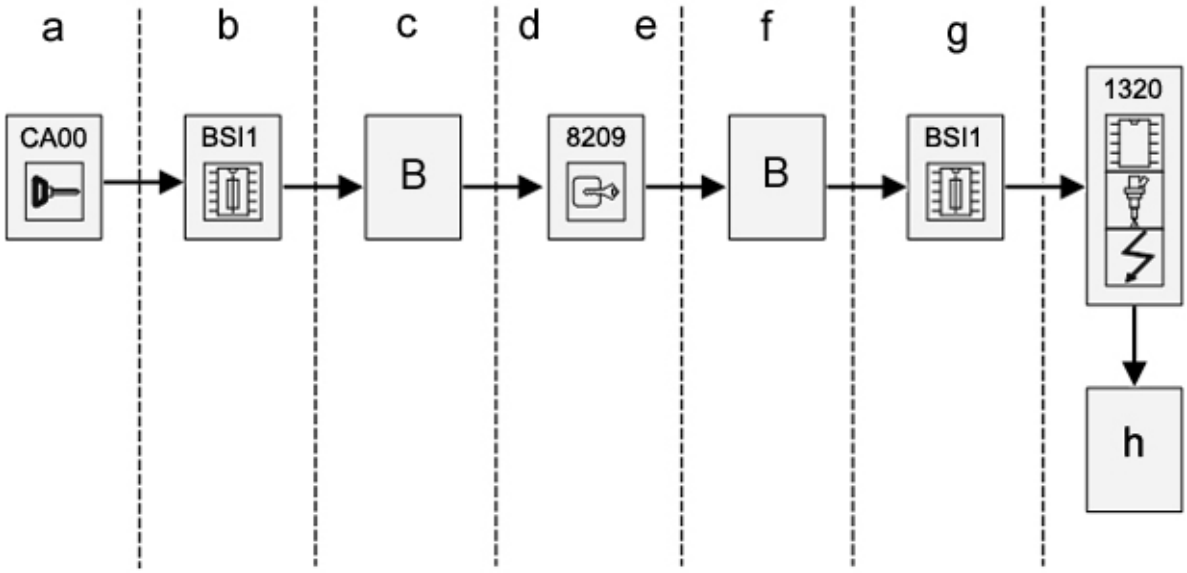

d4ea641d

B : Immobiliser unit.

BSI1 : Built-in systems interface.

CA00 : Ignition switch.

1320 : Engine ECU.

8209 : Transponder coil.

"a" : Insertion of the ignition key in the ignition switch and switching on of the ignition.

"b" : Supply : Immobiliser unit.

"c" : Key transponder identification request.

"d" : Request for key transponder identification.

"e" : Key transponder identified by the transponder coil.

"f" : Request to the built-in systems interface (BSI1) for identification of the transponder code.

"g" : Request to the engine management ECU for identification of the transponder code.

"h" : Starting of the engine is authorised.

The ignition key is inserted in the ignition switch then the ignition is switched on.

The built-in systems interface (BSI1) receives the position of the ignition switch then transmits the information to the immobiliser unit.

The immobiliser unit sends a request for identification of the ignition key via the transponder coil.

The immobiliser unit compares the identification code received from the ignition key with the code already recorded then sends a transponder code identification request to the built-in systems interface.

The engine management ECU receives the transponder code identification request from the built-in systems interface and authorises starting of the engine if the code already recorded matches.

NOTE : The immobiliser unit can record up to 8 different ignition keys in its memory

2 - FUNCTION : IMMOBILISER (WITH HANDS-FREE ACCESS AND STARTING)

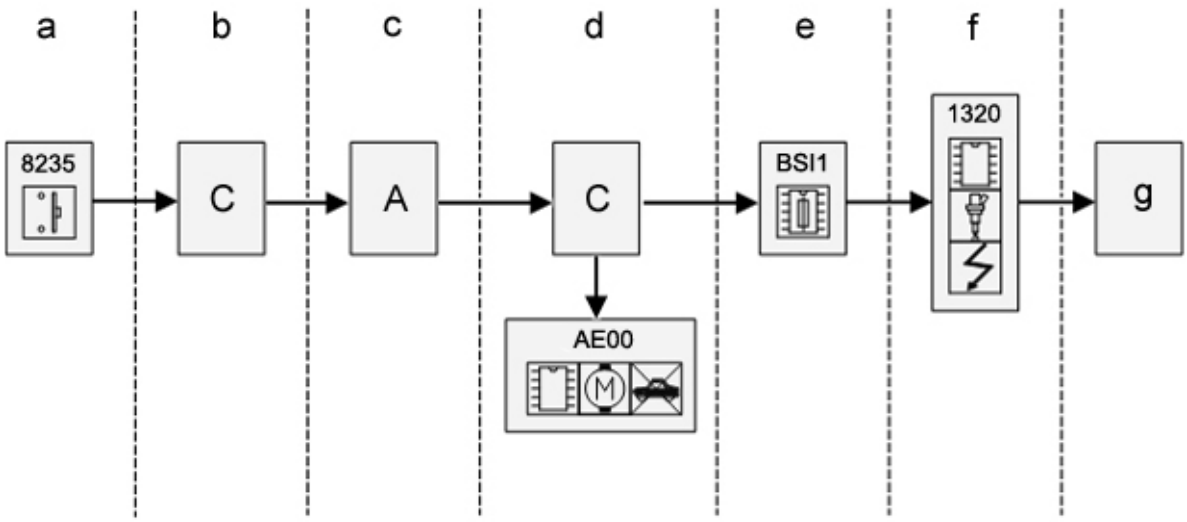

d4ea642d

A : Hands-free access control unit.

AE00 : Electric immobiliser.

BSI1 : Built-in systems interface.

C : Hands-free starting unit.

1320 : Engine ECU.

8235 : Engine starting switch.

"a" : Engine starting switch pressed.

"b" : Authentication request to the hands-free starting unit.

"c" : Hands-free identifier authentication request.

"d" : Comparison of the result of authentication. Authentication request to the electric ignition.

"e" : Transmission of the authentication request to the engine management ECU.

"f" : Comparison of the result of authentication.

"g" : Starting of the engine is authorised.

The engine starting switch is pressed once.

The hands-free starting unit sends a request for authentication to the hands-free access unit.

The hands-free access unit communicates with the hands-free identifier then sends the result to the hands-free starting unit.

> **NOTE :** If the battery is flat, the hands-free identifier can be inserted into the key reader then the procedure continues as normal using the engine starting switch

If the result conforms, the hands-free starting unit sends an authentication request to the electric ignition then, if successful, switches the supply to the built-in systems interface (BSI1).

If the engine starting switch is pressed a second time, the hands-free starting unit sends an authentication request to the engine management ECU.

If the results are the same, the unlocking sequence continues :

- The engine ECU is unlocked
- Starting of the engine is authorised

OPERATING METHODS : HANDS-FREE STARTING

1 - FUNCTION AND INSTALLATION

Hands-free starting.

2 - MAN/MACHINE INTERFACE

Hands-free starting.

3 - DESCRIPTION OF OPERATION : SENSOR

Electronic card reader (8239).

4 - DESCRIPTION OF OPERATION : ACTUATOR

Interior aerials (8241, 8249).

Electric steering lock (AE00).

5 - DESCRIPTION OF OPERATION : ECU

Hands-free unit (hands-free starting) (8240).

Hands-free unit (hands-free access) (8240).

6 - FLOW CHART

Hands-free starting.

7 - FUNCTION

Hands-free starting.

FUNCTION AND INSTALLATION : HANDS-FREE STARTING

1 - ROLE

Role of the hands-free starting :

- Detecting of a hands-free identifier
- Starting and stopping the vehicle's engine with a press on the engine starting switch
- Electrically locking and unlocking the steering column

2 - LOCATION

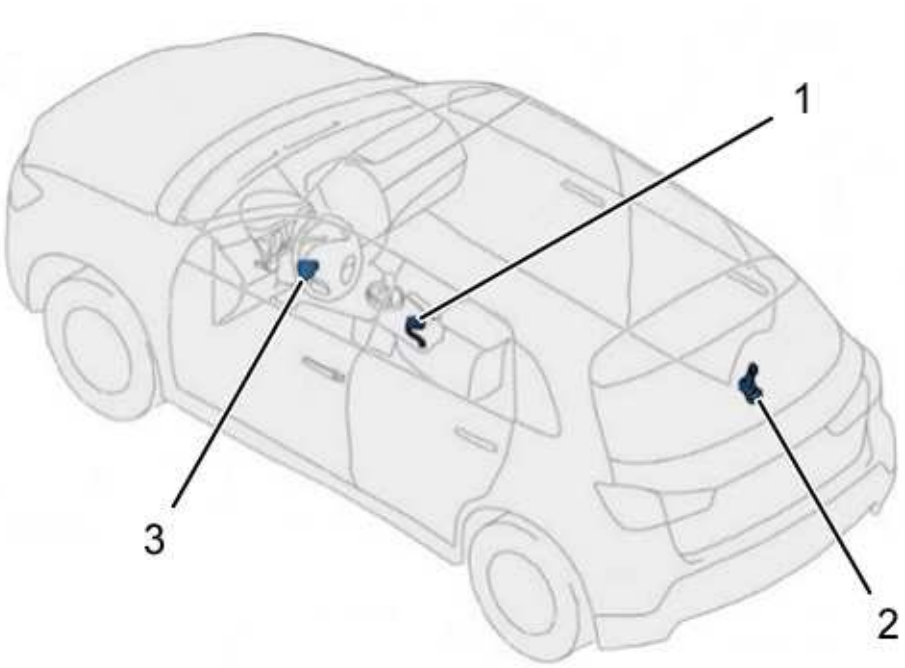

e1aa0chd

(1) Fascia panel interior aerial (Interior aerial located in the centre console).

(2) Central interior aerial (Interior aerial located in the boot).

(3) Electric steering lock.

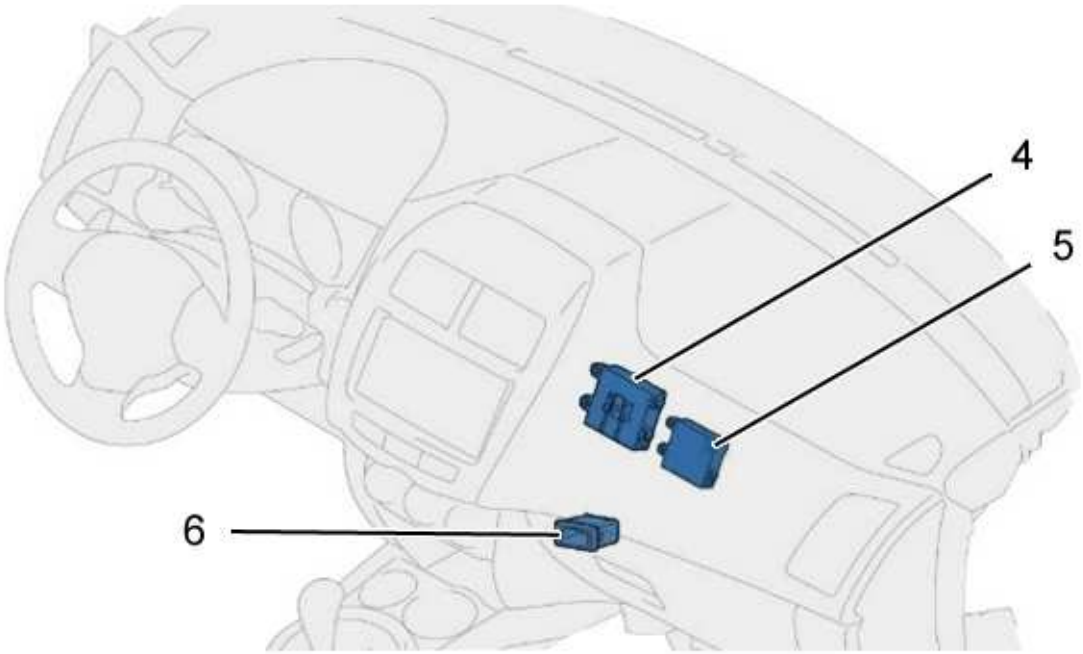

c5fa098d

(4) Hands-free kit (Hands-free access).

(5) Hands-free kit (Hands-free starting).

(6) Electronic key reader.

MAN/MACHINE INTERFACE : HANDS-FREE STARTING

1 - ACTIVATION/DEACTIVATION/ADJUSTMENTS

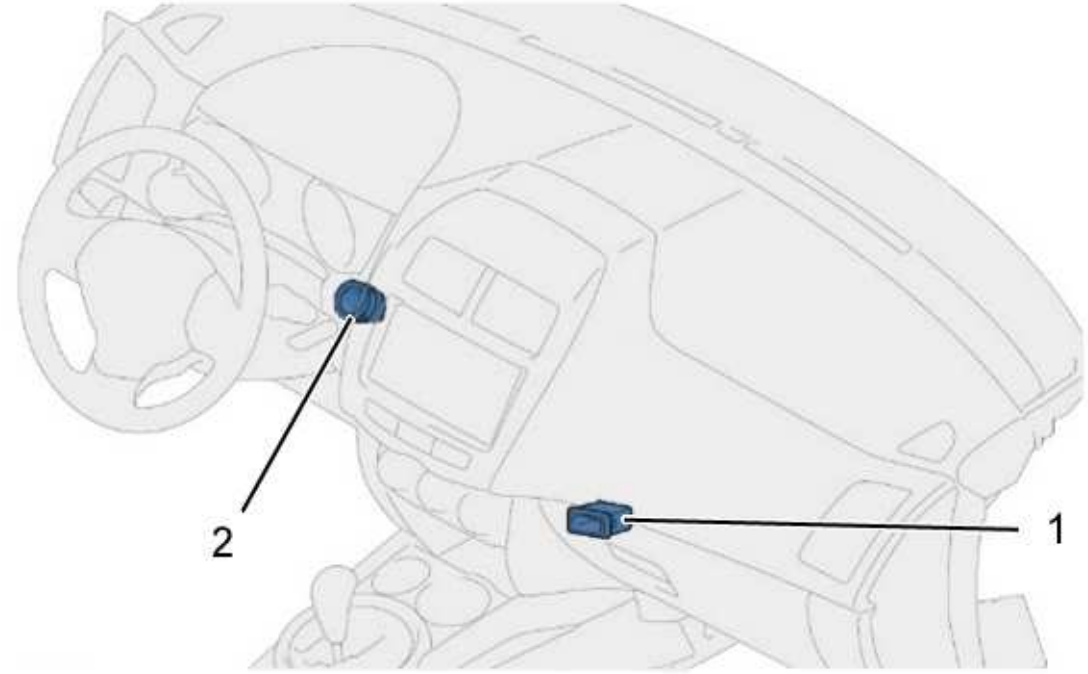

c5fa095d

(1) Electronic key reader.

(2) Engine starting switch .

1 - 1 - Activation

The first press on the engine starting switch activates the "accessories positive" supply mode and the engine starting switch indicator lamp lights up in orange.

A second press on the engine starting switch activates the "ignition positive" supply mode and permits starting of the engine, the engine starting switch indicator lamp lights up in green.

3 seconds after the engine is started, the indicator lamp on the engine starting switch goes off.

1 - 2 - Deactivation

When the vehicle is stationary with the engine running, pressing the engine starting switch stops the engine, the supply mode is switched to "OFF" and the indicator lamp on the engine starting switch goes off.

> **NOTE :** When the vehicle is moving or in an emergency only, pressing the engine starting switch for 3 seconds or 3 times in succession forces stopping of the engine. A press of 3 seconds or 3 consecutive presses on the engine starting switch will switch the supply mode to "ignition positive"

2 - PARAMETER SETTING

Not applicable.

3 - PRESENTATION OF THE SYSTEM INFORMATION

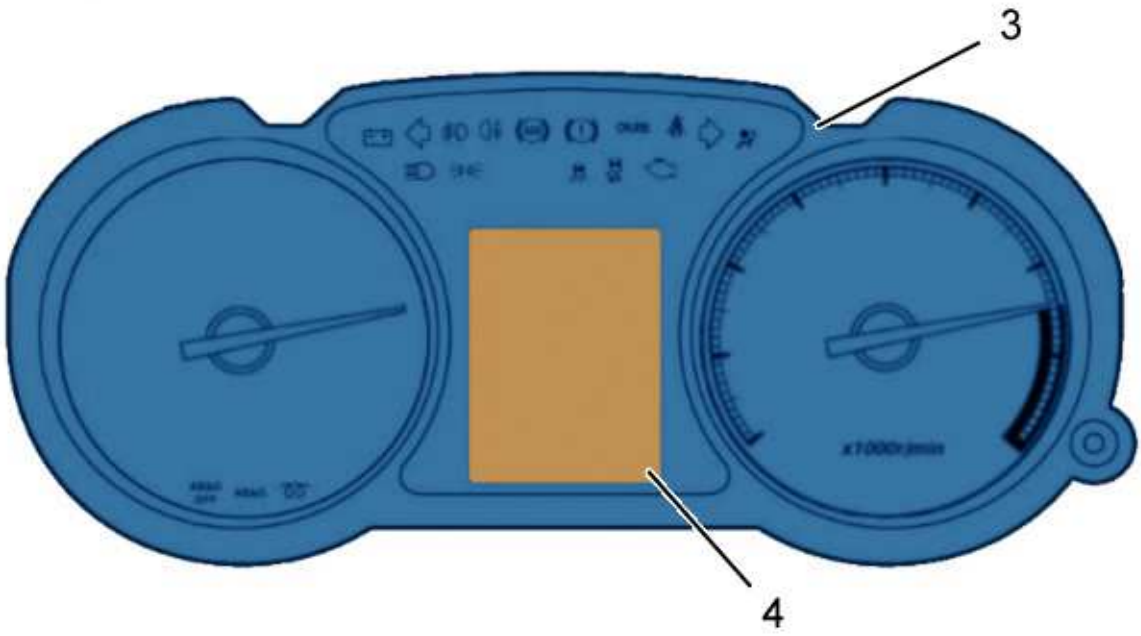

c5fa096d

(3) Instrument panel.

(4) Matrix screen on the instrument panel.

3 - 1 - Engine starting

Once the ignition has been switched on, a message is displayed on the instrument panel matrix screen indicating the procedure to be followed to start the engine.

3 - 2 - Unlocking the steering wheel

If the position of the steering wheel is interfering with the unlocking of the electric steering lock, a message is displayed on the instrument panel matrix screen, indicating the procedure to be followed to unlock the steering wheel correctly.

3 - 3 - Hands-free identifier not detected

When a request is made to start the engine, if the hands-free identifier is not detected by the interior aerials a message is displayed on the instrument panel matrix screen.

3 - 4 - Stopping the engine without the hands-free identifier

Stopping the engine does not require the presence of the hands-free identifier in the vehicle.

A simple press of the engine starting switch is enough to stop the engine.

3 - 5 - Hands-free identifier absent

When one of the doors is closed, with the engine running, if the hands-free identifier is no longer detected by the interior aerials a message is displayed on the instrument panel matrix screen.

DESCRIPTION - FUNCTION : ELECTRONIC KEY READER

1 - DESCRIPTION

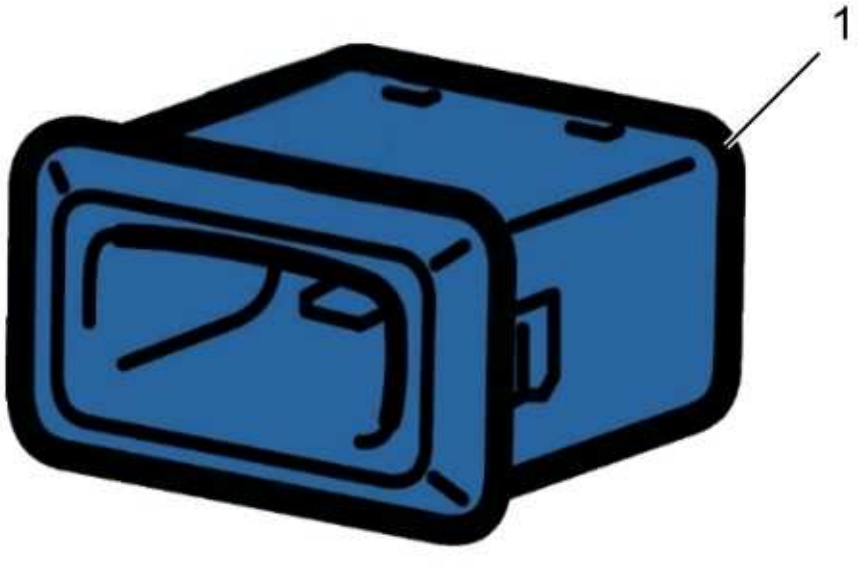

d4ea5ntd

(1) Electronic key reader.

2 - ROLE

Role of the electronic key reader :

- Identification and authentication of the hands-free identifier
- Starting the vehicle if the battery of the hands-free identifier is low
- Permitting of re-starting of the vehicle

3 - FUNCTION

When the battery of the hands-free identifier is low, hands-free starting is possible only if the hands-free identifier is inserted in the slot where the electronic key reader is located.

The electronic key reader is contacted by the hands-free access control unit in the following phases :

- Request for switching on the ignition and unlocking the steering column
- Closing of one of the vehicle doors (With the engine running)
- Opening of the driver's door after stopping of the engine (OFF supply mode)

The electronic key reader sends out a low frequency signal.

4 - ELECTRICAL FEATURES

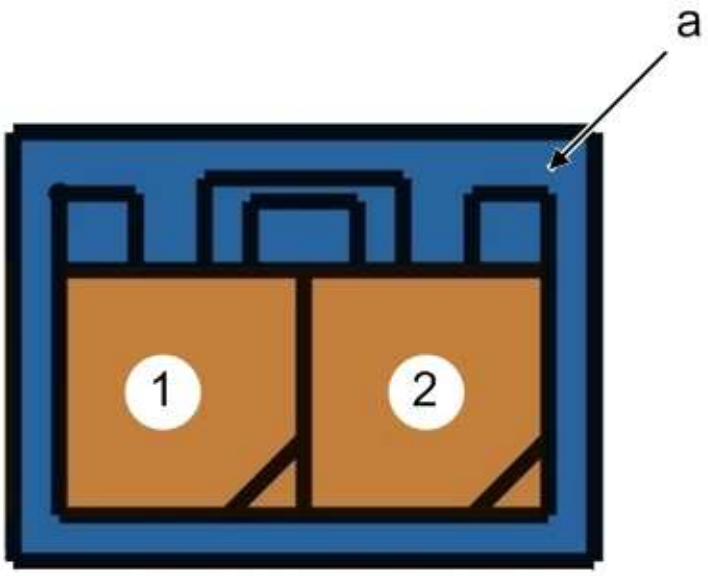

d2aa0a5d

"a" Bonnet locking 2	
Channel number	Allocation of channels of connector
1	+ signal
2	- signal

5 - PROGRAMMING/INITIALISATION

Not applicable.

DESCRIPTION - FUNCTION : INTERIOR AERIAL

1 - DESCRIPTION

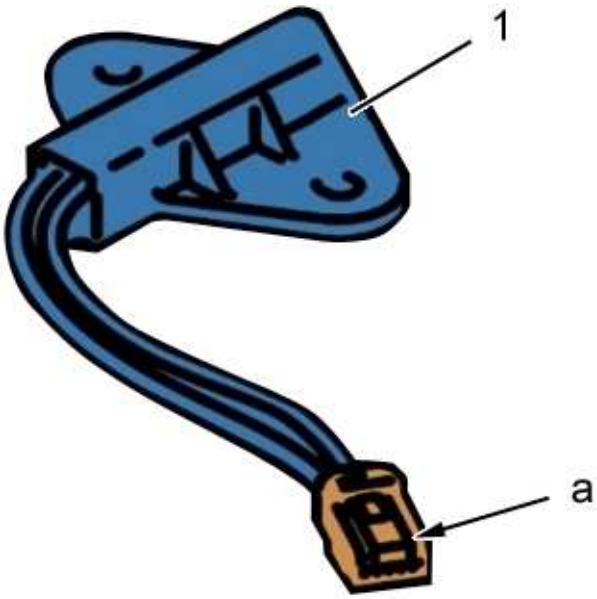

d5aa00id

(1) Interior aerial.

"a" Bonnet locking 5.

2 - ROLE

The interior aerials locate the hands-free identifier inside the vehicle.

3 - FUNCTION

The interior aerials are activated by the hands-free unit (hands-free access) during the following phases :

- Request for switching on ignition
- Engine starting request
- Request for switching off the engine
- Hands-free locking request

NOTE : After a request, the aerials transmit a low-frequency signal

4 - ELECTRICAL FEATURES

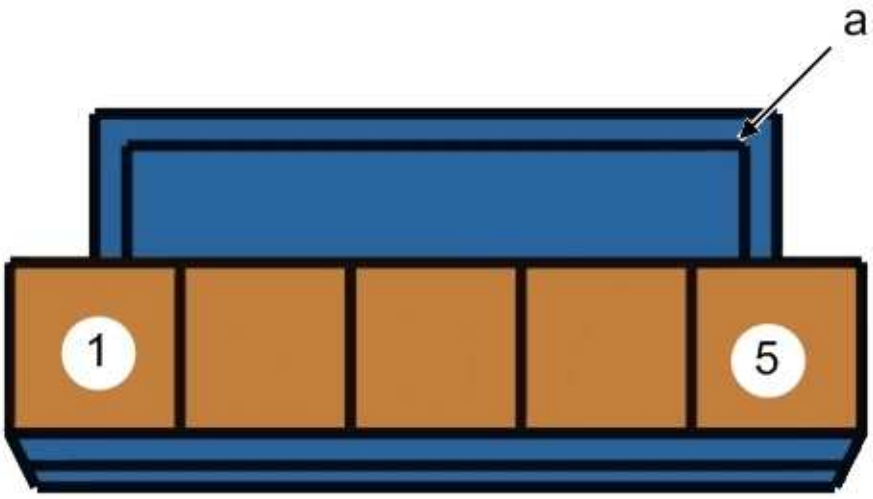

d2aa09zd

"a" Bonnet locking 5	
Channel number	Allocation of channels of connector
1	Positive signal
2	Not connected
3	Not connected
4	Not connected
5	Negative signal

5 - PROGRAMMING - INITIALISATION

Not applicable.

DESCRIPTION - FUNCTION : ELECTRIC STEERING LOCK

1 - DESCRIPTION

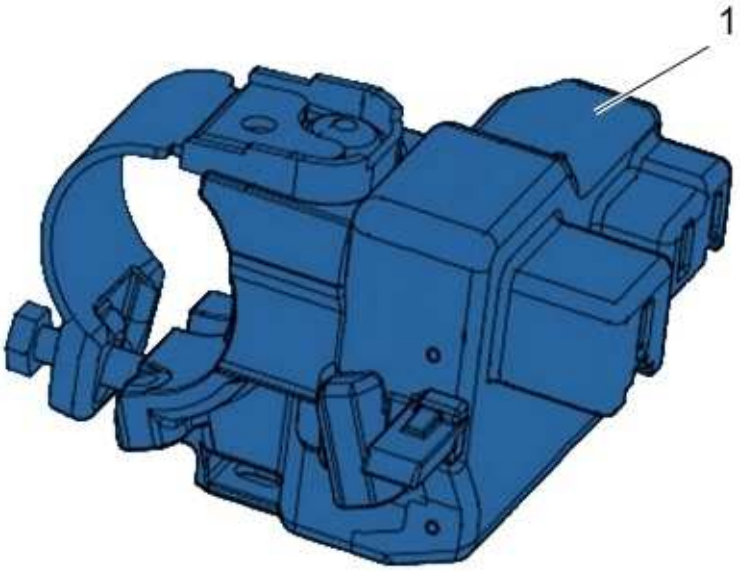

d4ea5nsd

(1) Electric steering lock.

2 - ROLE

The electric steering lock mechanically locks and unlocks the steering column, via an electric control.

3 - FUNCTION

Not applicable.

4 - ELECTRICAL FEATURES

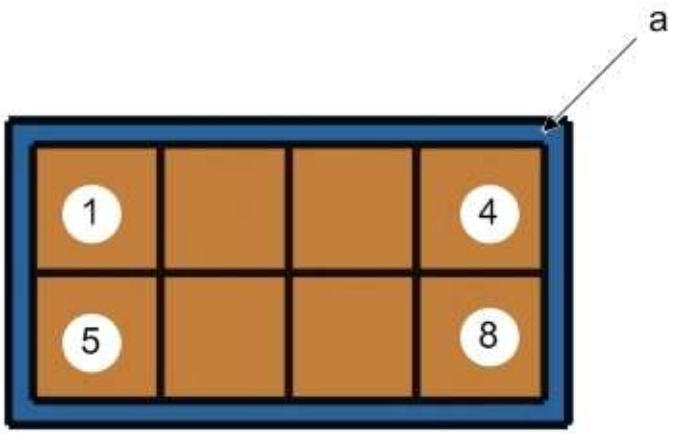

d2aa0a3d

"a" 8-way black connector	
Channel number	Allocation of channels of connector
1	Supply
2	Channel not connected
3	Receipt of the electric steering lock authorisation of operation signal by the hands-free unit (hands-free access)
4	Earth
5	Channel not connected
6	Electric steering lock control supply by the hands-free unit (hands-free starting)
7	Channel not connected
8	LIN

5 - PROGRAMMING - INITIALISATION

Not applicable.

DESCRIPTION - FUNCTION : HANDS-FREE UNIT (HANDS-FREE STARTING)

NOTE : (*) According to specification

1 - DESCRIPTION

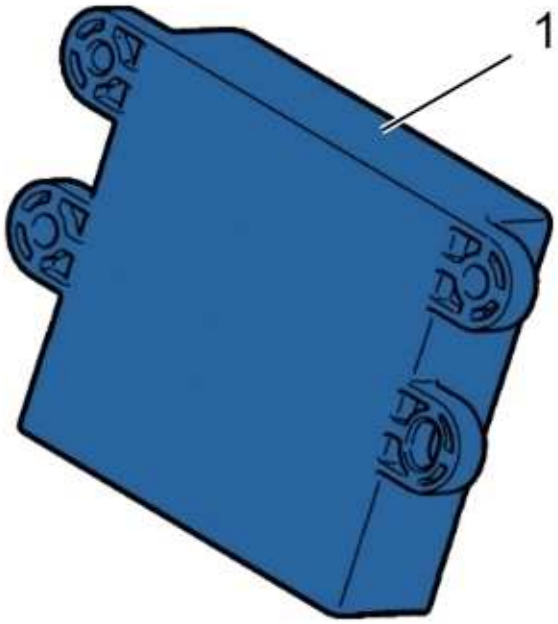

d4ea5ndd

(1) Hands-free unit (hands-free starting) .

2 - ROLE

Role of the hands-free unit (hands-free starting) :

- Storing of the faults detected
- System failure information
- Management of the authorisation of hands-free starting via the built-in systems interface
- Communication on the CAN with the hands-free unit (hands-free starting), the built-in systems interface, the instrument panel and the engine management ECU
- Control of the electric steering lock
- LIN communication with the electric steering lock
- Management of the engine starting switch
- Request for activation of the starter relay to the engine management ECU via the built-in systems interface
- Receipt of the information from the brake switch, and of the position of the selector lever in the case of vehicles equipped with a CVT gearbox (*)
- Receipt of the clutch pedal pressed information in the case of vehicles with a manual gearbox (*)
- Receipt of the electric steering lock authorisation of operation signal by the hands-free unit (hands-free starting) (Wire signal)
- Hands-free unit (hands-free starting) back-up supply
- Electric steering lock control supply

- "ignition positive" relays activation request
- Controls the main supply relay
- Request for activation of the starter relay to the engine management ECU (By wire)
- Controls the engine starting switch indicator lamps

3 - ELECTRICAL FEATURES

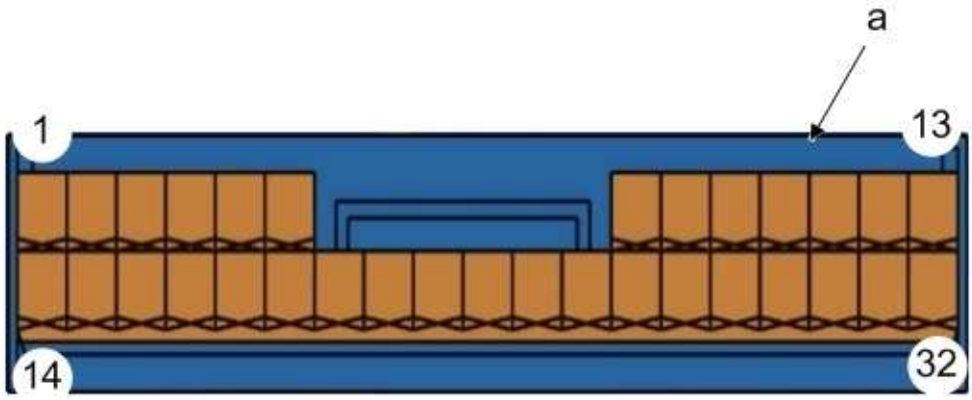

d4ea5ned

"a" Bonnet locking 32	
Channel number	Allocation of channels of connector
1	CAN-B High
2	Earth
3	Clutch switch information (*)
4	Engine starting switch indicator lamp control
5	Engine starting switch indicator lamp control
6	Engine starting switch lighting control
7	Ignition positive relay control
8	Channel not connected
9	Channel not connected
10	Ignition positive signal
11	Channel not connected
12	Hands-free unit (hands-free starting) back-up supply
13	Service battery positive
14	CAN-B Low
15	Earth
16	LIN (Electric steering lock)
17	Gear lever position "P" information (*)
18	Channel not connected
19	Engine starting switch position information

20	Channel not connected
21	Electric steering lock status information
22	Channel not connected
23	Starter control command
24	Channel not connected
25	Supply of the electric steering lock
26	Channel not connected
27	Information on brake pedal main switch status
28	Channel not connected
29	Engine starting switch position information
30	Channel not connected
31	Channel not connected
32	Service battery positive

4 - PROGRAMMING - INITIALISATION

Programming is necessary if the part is removed/refitted.

DESCRIPTION - FUNCTION : HANDS-FREE KIT (HANDS-FREE ACCESS)

1 - DESCRIPTION

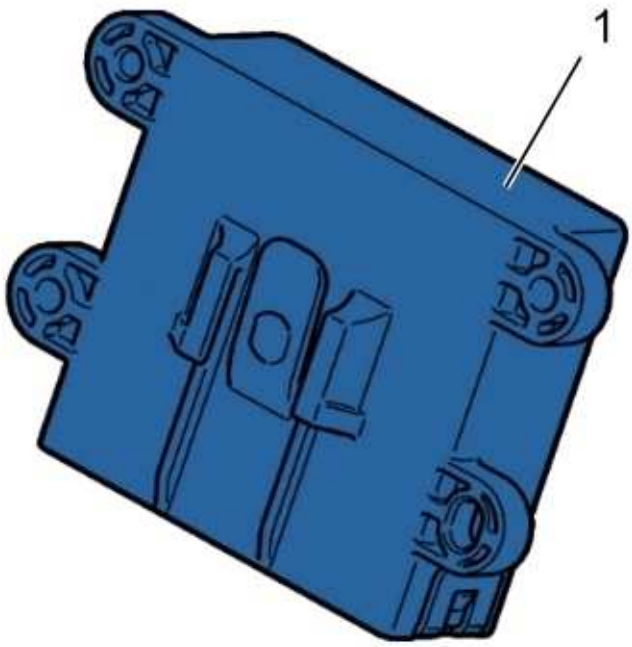

d4ea5ngd

(1) Hands-free unit (hands-free access) .

2 - ROLE

Role of the hands-free unit (hands-free access) :

- Management of the hands-free locking/unlocking via the built-in systems interface
- Authentication of the hands-free identifier for access to the vehicle
- Wake-up of the multiplexed networks when there is an opening request
- Storing of the faults detected
- System failure information
- Management of the interior and exterior aerials
- Management of the locking/unlocking switches on the door, boot and interior opening controls
- Supply of the exterior opening controls and the low frequency aerials
- Filtering of the messages from the hands-free identifier (button presses)

3 - ELECTRICAL FEATURES

3 - 1 - Bonnet locking 16

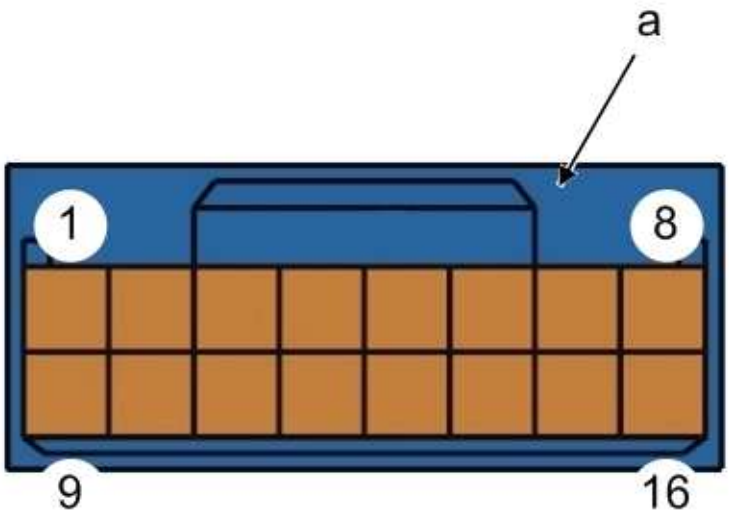

d2aa0a1d

"a" Bonnet locking 16	
Channel No.	Allocation of channels of connector
1	Electronic key reader positive signal
2	CAN-B Low
3	CAN-B High
4	Earth
5	Buzzer supply
6	Channel not connected
7	Ignition controlled +
8	Service battery positive
9	Electronic key reader negative signal
10	Channel not connected
11	Tailgate unlocking control
12	Channel not connected
13	Channel not connected
14	Tailgate locking control
15	Front right door locking/unlocking control
16	Front left door locking/unlocking control

3 - 2 - Bonnet locking 24

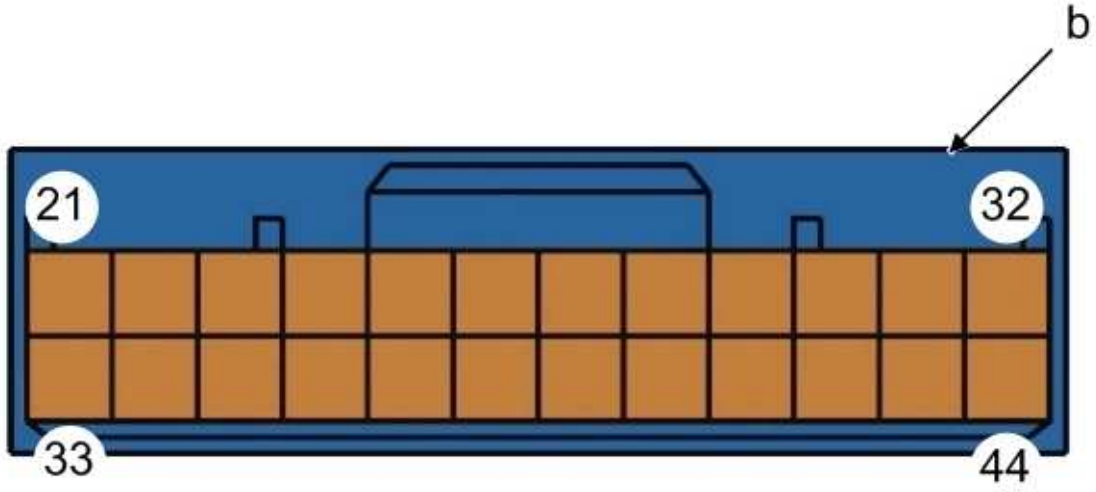

d2aa0a2d

"b" Bonnet locking 24	
Channel No.	Allocation of channels of connector
21	Hands-free unit (hands-free access) back-up supply
22	Channel not connected
23	Electronic steering lock control authorisation signal
24	Channel not connected
25	Channel not connected
26	Channel not connected
27	Channel not connected
28	Boot exterior aerial positive signal
29	Boot interior aerial positive signal
30	Passenger's door exterior aerial positive signal
31	Interior aerials positive signal
32	Driver's door exterior aerial positive signal
33	Buzzer earth
34	Channel not connected
35	Channel not connected
36	Channel not connected
37	Channel not connected
38	Channel not connected
39	Channel not connected
40	Boot exterior aerial negative signal
41	Boot interior aerial negative signal
42	Passenger's door exterior aerial negative signal
43	Interior aerials negative signal
44	Driver's door exterior aerial negative signal

4 - PROGRAMMING - INITIALISATION

Programming is necessary if the part is removed/refitted.

FLOW CHART : HANDS-FREE STARTING

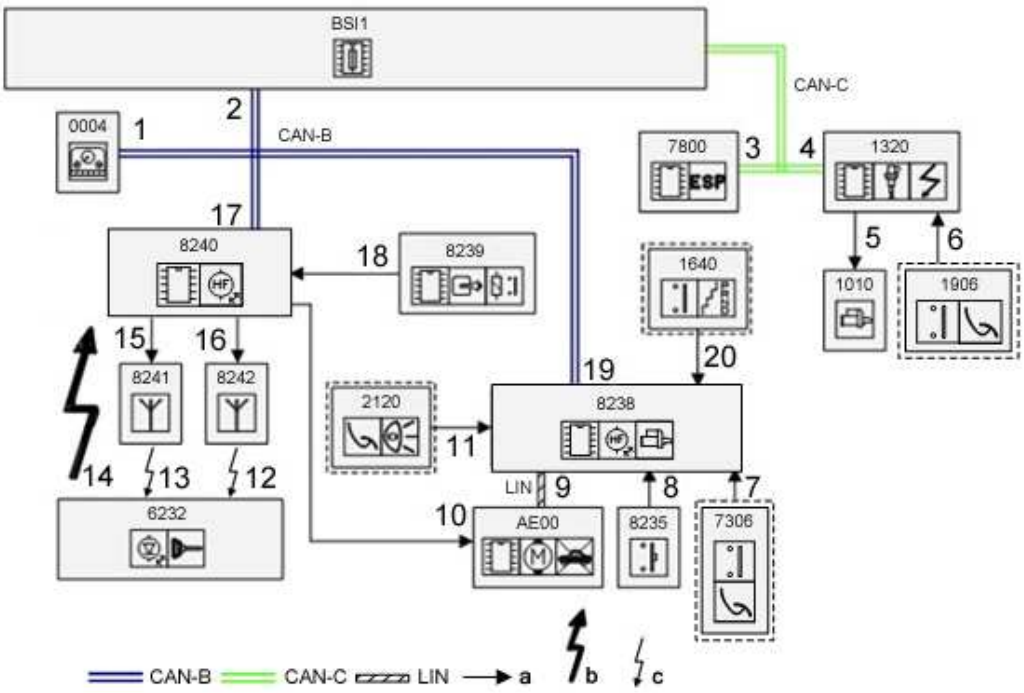

d4ea6skd

Components description table	
element	Designation
AE00	Electric steering lock
BSI1	Built-in systems interface
0004	Instrument panel
1010	Starter
1320	Engine ECU
1640 (*)	Continuously variable transmission programme selector
1906 (*)	Clutch interlocking switch
2120 (*)	Brake dual-function switch
6232	High frequency remote control or hands-free identifier
7306 (*)	Clutch switch
7800	Dynamic stability control ECU
8235	Engine starting switch
8238	Hands-free starting unit
8239	Electronic key reader
8240	Hands-free access control unit
8241	Fascia panel interior aerial (Interior aerial located in the centre console)
8242	Central interior aerial (Interior aerial located in the boot)
(*) According to version	

Description of the exchanges of information			
No. of link	signal	Signal transmitter/receiver	Nature of signal
	Request to display the hands-free starting function fault message		

1	Request to display the electric steering lock fault message	BSI1 / 0004	B CAN
	Request to display the hands-free identifier absent message		
	Request to display the hands-free identifier battery low warning message		
2	Engine starting request	8238 / BSI1	B CAN
	Gear selection lever position information (*)		
	Clutch pedal switch information (*)		
	Information specifying the press on the brake pedal (*)		
	Engine starting switch information		
	Hands-free starting function fault information		
	Electric steering lock system fault information		
	Door status information	BSI1/ 8238	
	Vehicle speed information		
	Pre-post heating status (*)		
	Request to display the hands-free starting function fault message	BSI1 / 0004	
	Request to display the electric steering lock fault message		
	Request to display the hands-free identifier absent message		
	Request to display the hands-free identifier battery low warning message		
3	Vehicle speed information	7800 / BSI1	C CAN
4	Engine running information	1320 / BSI1	C CAN
	Pre-post heating status		
	Clutch interlocking switch information (*)		
	Engine starting authorisation	BSI1/ 1320	
5	Starter solenoid control	1320 / 1010	By wire
6 (*)	Clutch interlocking switch information	1906 / 1320	By wire
7 (*)	Clutch switch information	7306 / 8238	By wire
8	Engine starting switch information	8235 / 8238	By wire
9	Electric steering lock status information	AE00 / 8238	LIN
	Electric steering lock locking/unlocking control	8238 / AE00	
10	Electric steering lock unlocking autorisation	8240 / AE00	By wire

11 (*)	Information on depressing the brake pedal	2120 / 8238	By wire
12	Search for the hands-free identifier by the central interior aerial (Interior aerial located in the boot)	8242 / 6232	Low frequency connection
13	Search for the hands-free identifier by the dashboard interior aerial (Interior aerial located in the centre console)	8241 / 6232	Low frequency connection
14	Response from the hands-free identifier	6232 / 8240	High frequency link
15	Dashboard interior aerial control (Interior aerial located in the centre console)	8240 / 8241	By wire
16	Central interior aerial control (Interior aerial located in the boot)	8240 / 8242	By wire
17	Hands-free identifier signal present	8240 / 8238	B CAN
	Request for identification of the hands-free identifier transponder		
	Response from the hands-free identifier transponder	8238 / 8240	
18	Identification of the hands-free identifier transponder	8239 / 8240	By wire
	Status of electronic key reader starting request		
19	Engine starting request	8238 / BSI1	B CAN
	Gear lever position information (*)		
	Clutch switch information (*)		
	Brake dual-function switch information (*)		
	Engine starting switch information		
	Hands-free starting function fault information		
	Electric steering lock system fault information		
	Side doors status information	BSI1/ 8238	
	Vehicle speed information		
	Pre-post heating status (*)		
20 (*)	Gear lever position information	1640 / 8238	By wire
(*) According to version			

FUNCTION : HANDS-FREE STARTING

NOTE : (*) According to version

1 - ENGINE STARTING

When the vehicle is started, the hands-free starting system operates according to the following steps :

- Request to turn the ignition on by pressing the engine start switch
- Location and identification of the hands-free identifier transponder
- Switching on of the ignition and unlocking of the electric steering lock
- Request engine start by pressing on the engine start switch
- Engine starting

1 - 1 - Location and identification of the hands-free identifier transponder

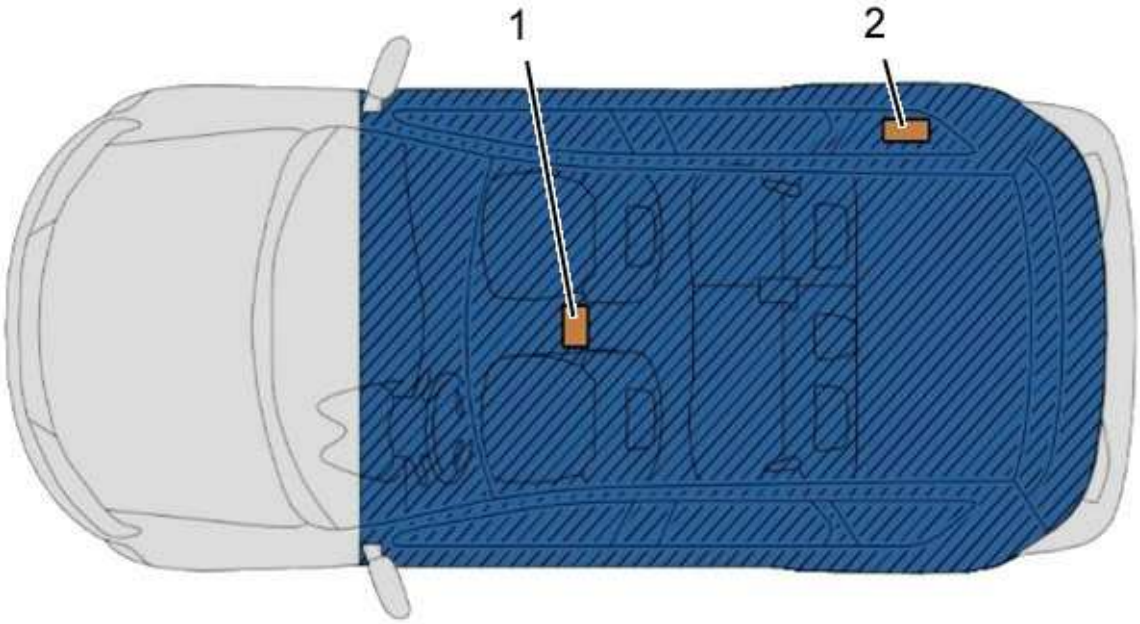

e1aa0cgd

(1) Fascia panel interior aerial (Interior aerial located in the centre console).

(2) Central interior aerial (Interior aerial located in the boot).

The hands-free identifier must be present in the zone defined above.

Following a press on the engine starting switch, the interior aerials are controlled to search for the hands-free identifier.

The hands-free identifier receives the signals sent by the interior aerials, confirms the hands-free identifier transponder identification code, calculates the encrypted code and sends the response data signal to the hands-free unit (hands-free starting).

If the integrated battery is flat, the hands-free identifier receives the signals via the electronic key reader when it is inserted in it.

Then, the hands-free identifier confirms the hands-free identifier transponder identification code, calculates the encrypted code and sends the response data signal to the hands-free unit (hands-free starting) via the electronic key reader.

If 2 hands-free identifiers, or more, recorded in the hands-free unit (hands-free starting) react at the same time, their signals may interfere with each other. To prevent this interference, each signal of the hands-free unit (hands-free starting) is classed according to the priority data and the hands-free identifiers react in accordance with this priority.

If the hands-free identifier is located and identified in the detection area, the driver can move on to the next step.

1 - 2 - Switching on of the ignition and unlocking of the electric steering lock

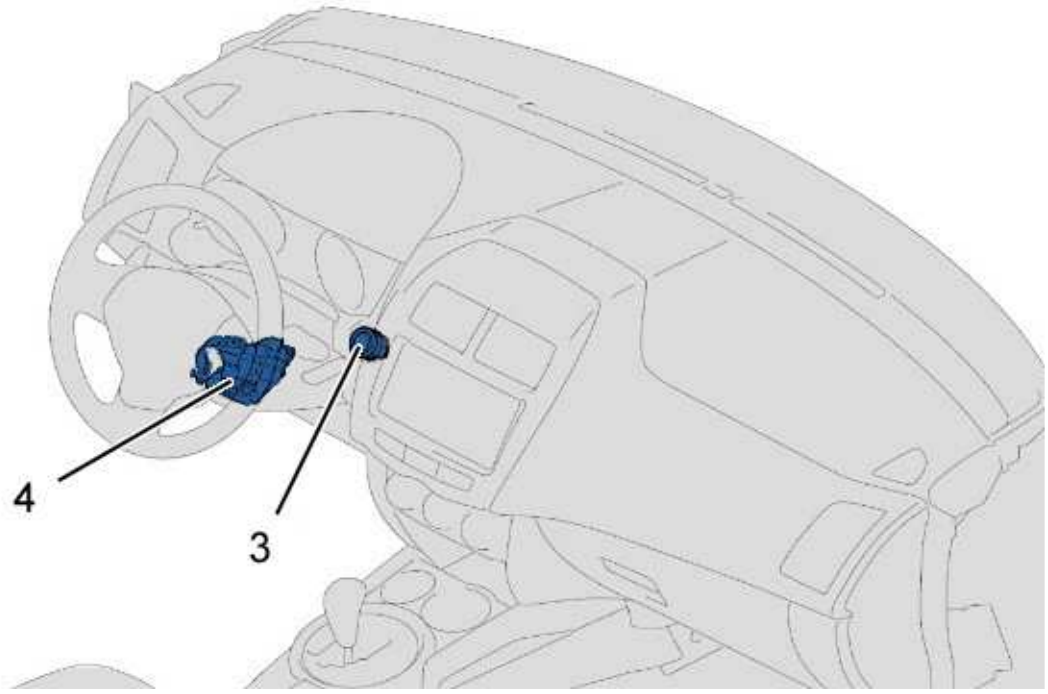

c5fa092d

(3) Engine starting switch.

(4) Electric steering lock.

First press on the engine start switch (Without pressing the brake pedal (*) or the clutch pedal (*)) :

- When the engine starting switch (3) is pressed, the hands-free unit (hands-free starting) provides the supply for the electric steering lock (4) and at the same time sends a hands-free identifier transponder identification request
- Following the identification of the hands-free identifier transponder, the hands-free unit (hands-free starting) orders the built-in systems interface to switch to ignition positive supply mode and the electric steering lock receives the authorisation to unlock the steering column

Second press on the engine starting switch (Without pressing the brake pedal (*) or the clutch pedal (*)) :

- Ignition on
- Then the hands-free unit (hands-free starting) sends the engine management ECU the authorisation to start the engine

  NOTE : The presence of the hands-free identifier in the vehicle is only necessary during unlocking of the steering column. If the steering column is not unlocked the ignition positive supply mode is not permitted and a warning appears on the instrument panel

If the electric steering lock cannot unlock due to the position of the steering column, a message is displayed on the instrument panel matrix screen : Rotate the steering column to facilitate unlocking.

1 - 3 - Engine starting

The hands-free identifier must be present in the vehicle if the steering column is locked.

A press on the engine starting switch with the brake pedal pressed and the selector lever in position P (*), or the clutch pedal pressed fully and the gear lever in the neutral position (*), permits starting of the engine :

- The hands-free identifier identification and locating procedure is carried out and the supply mode is switched to ON mode (Ignition)
- At the same time, the hands-free starting unit (hands-free starting) sends the identification request to the engine management ECU via the CAN and checks the pre-heating status signal (*)
- The hands-free unit (hands-free starting) sends the starter activation request to the engine management ECU (In the case of the diesel engines, the request is sent when the preheating is complete). In the case of vehicles fitted with the Stop and Start system, the starter activation request is sent to the engine management ECU and to the Stop and Start ECU (*)
- The engine management ECU or the Stop and Start ECU (*) controls the starter to start the engine. The engine management ECU compares its own identification result with that of the hands-free unit (hands-free starting) and starts the engine if the results match. (If the certification results do not match, the engine management ECU or the Stop and Start ECU (*) cuts off the supply to the starter and the engine management ECU cuts off the injection. The hands-free unit (hands-free starting) ends the starter control request)
- When the engine has been started, the hands-free unit (hands-free starting) ends the starter control request

  NOTE : A request to start the engine cannot exceed 15 seconds, once this period has elapsed a further engine starting request is necessary

During the engine start request cycle, it is possible to deactivate this request by a second press on the engine start switch.

1 - 4 - Starting in backup mode

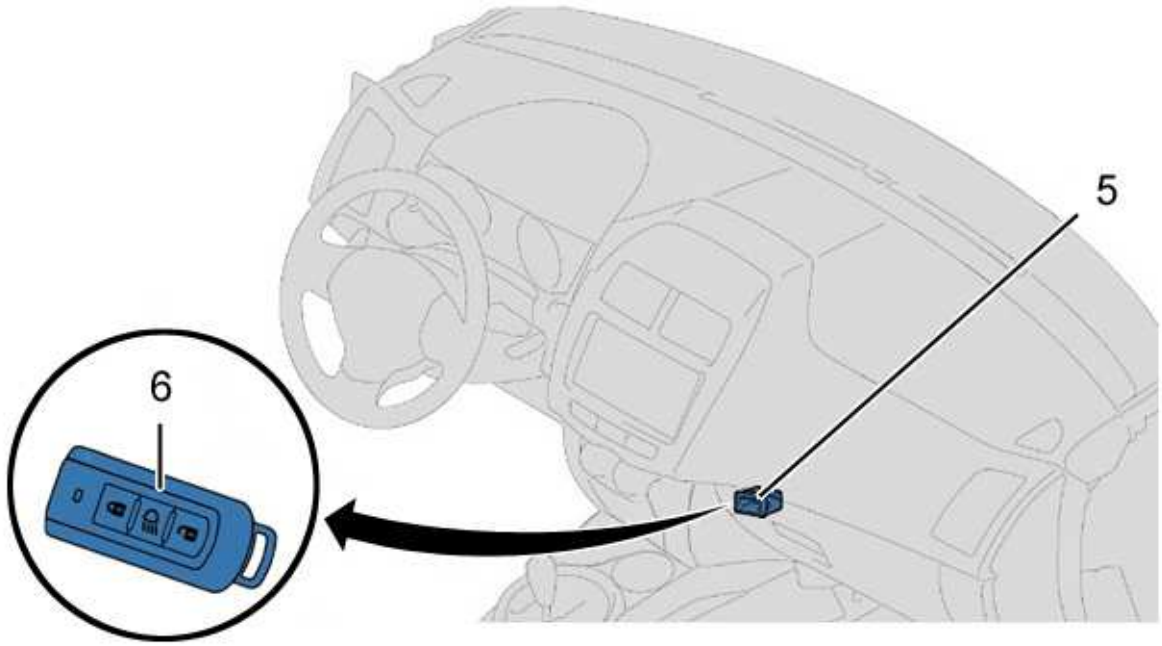

d4ea6snd

(5) Electronic key reader.

(6) Hands-free identifier.

If the hands-free identifier battery is flat, the hands-free starting system becomes available when the hands-free identifier (6) is inserted in the electronic key reader (5).

If the electronic key reader identifies the hands-free identifier, the normal conditions for turning on the ignition, unlocking the electronic steering lock and starting the engine can be implemented.

NOTE : This starting mode is necessary when the battery of the hands-free identifier is low

2 - STOPPING THE ENGINE

When the engine is running and the vehicle's speed is below 3km/h, pressing the engine start switch stops the engine.

When the speed of the vehicle reaches or exceeds 3 km/h, it is possible to force stopping of the engine by means of an extended press of 3 seconds or 3 repeated presses minimum on the engine starting switch within intervals of less than one second.

FUNCTION : ELECTRICAL SUPPLY

1 - FOREWORD

The electrical supplies present on the vehicles are the following :

- "accessories+" supply (ACC+)
- "IGNITION SWITCHED+" supply" (ignition switched +)
- Permanent "battery+" supply (BATT+)

The vehicle's electrical supply is linked with the requirement of each unit, in relation to the strategies for implementation of the supplies.

The units are supplied either permanently or linked with the waking up of the built-in systems interface.

The waking up of the built-in systems interface is initiated by one of the following actions to permit the activation of certain functions :

- Action on the high frequency remote control
- Opening of a door

Main electrical supply, protection and distribution components :

- Battery (BB00) : Under bonnet (On the driver's side)
- - Battery Output Fuse Box (BFDB) : On the positive terminal of the battery
- Engine fusebox (PSF1) : Under bonnet (On the driver's side)
- Built-in systems interface (BSI1) : Under the fascia (On the driver's side)

2 - PRINCIPAL STATUS OR IGNITION ON



d4ea5jbd

(1) Engine starting switch .

Supply	State : Engine starting switch
OFF	Off position
ACC	An initial press on the engine starting switch activates the vehicle ignition (Internal combustion engine not running, audio or telematics system and certain electrical equipment functional)
ON	A second press on the engine starting switch activates the vehicle ignition (Internal combustion engine running or not running)
START	Press on the starting switch with the clutch pedal pressed (manual gearbox) or brake pedal pressed and gear selector in position : "P" or "N" (Automatic gear box)
OFF	A 3rd press switches off the ignition

3 - POSITION OF THE IGNITION KEY



d4em02md

Ignition key position	Supply
LOCK	Off position
ACC	"accessories" position (Internal combustion engine not running, audio or telematics system and certain electrical equipment functional)
ON	"ignition" position (Internal combustion engine running or not running)
START	Starting of the engine

NOTE : The passage from the ACC position to the LOCK position is achieved by pushing the key then turning it ; The ignition key is inserted and removed in the LOCK position only

4 - SUMMARY OF THE MAIN STATUS OF SWITCHING ON OF THE IGNITION

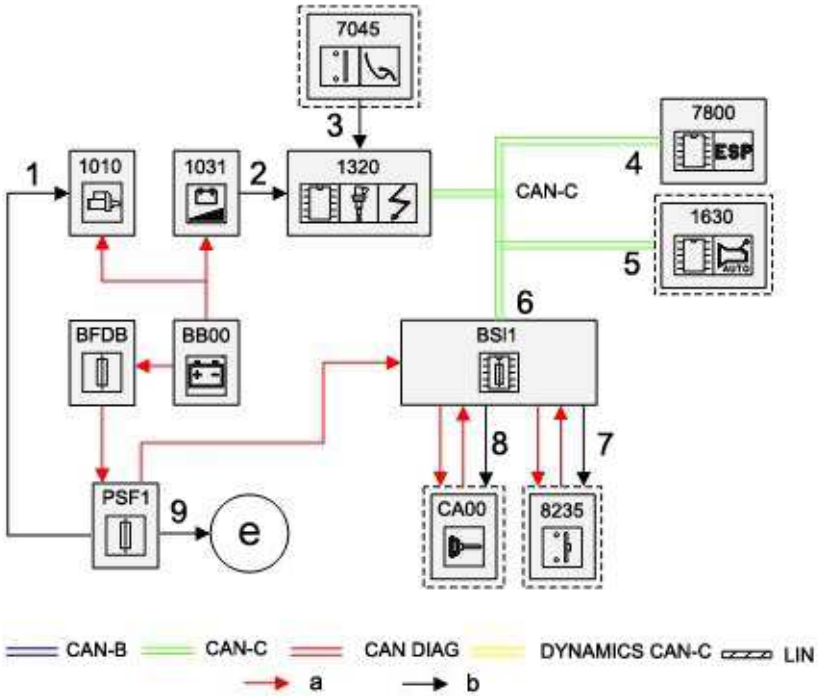

d4ea5jcd

Key :

- "a" Low voltage supply
- "b" Wire connection

Reference	Designation
BB00	Battery
BFDB	Fuse box from battery
BSI1	Built-in systems interface
CA00 (*)	Ignition switch
PSF1	Connector board - Engine compartment fuse box
"e"	Equipment which consumes the ignition plus
1010	Starter
1031	Battery charge status unit
1320	Engine ECU
1630 (*)	Automatic transmission control unit
7045 (*)	Clutch pedal information switch
7800	ESP ECU
8235 (*)	Engine starting switch
(*) According to version	

Description of the exchanges of information			
No. of link	Signal	Transmitter/receiver	Nature of signal
1	Control of the starter motor	PSF1 - PRF1 / 1010	Analogue
2	Battery condition	1031 / 1320	Analogue
3 (*)	Information : Clutch pedal position	7045 / 1320	Analogue
4	Vehicle speed information	7800 / 1320	C CAN
5 (*)	Authorisation of engine starting automatic gearbox selection	1630 / 1320	C CAN

	position information (P or N)		
6	Starting request information Ignition plus control	BSI1 / 1320	C CAN
7 (*)	"starting" status "ignition" status	8235 / BSI1	Analogue
8 (*)	"starting" status "ignition" status	CA00 / BSI1	Analogue
9	Distribution of the ignition plus	PSF1 / e	-
(*) According to version			

5 - BATTERY ECONOMY FUNCTIONS

The vehicle does not have an economy mode.

When the engine is switched off, the C-CAN and B-CAN are switched off.

> **NOTE :** The engine management ECU is still supplied in order to carry out the post-ventilation functions

The built-in systems interface incorporates 3 functions which can be configured ; Using the diagnostic equipment :

- Automatic switching off of the accessories positive after the ignition is switched off (No switching off function, timed period of 30 minutes, timed period of 60 minutes)
- Automatic switching off of the interior lighting (Function not active, timed period of 3 minutes, timed period of 30 minutes, timed period of 60 minutes)
- Automatic switching off of the dipped headlamps with the ignition key in the LOCK or ACC position (Function not active, switching off 3 minutes after the ignition is switched off and 1 second after opening the door)

FLOW CHART : HDI DIRECT INJECTION SYSTEM CONTINENTAL SID 807 (ENGINE DV6C)

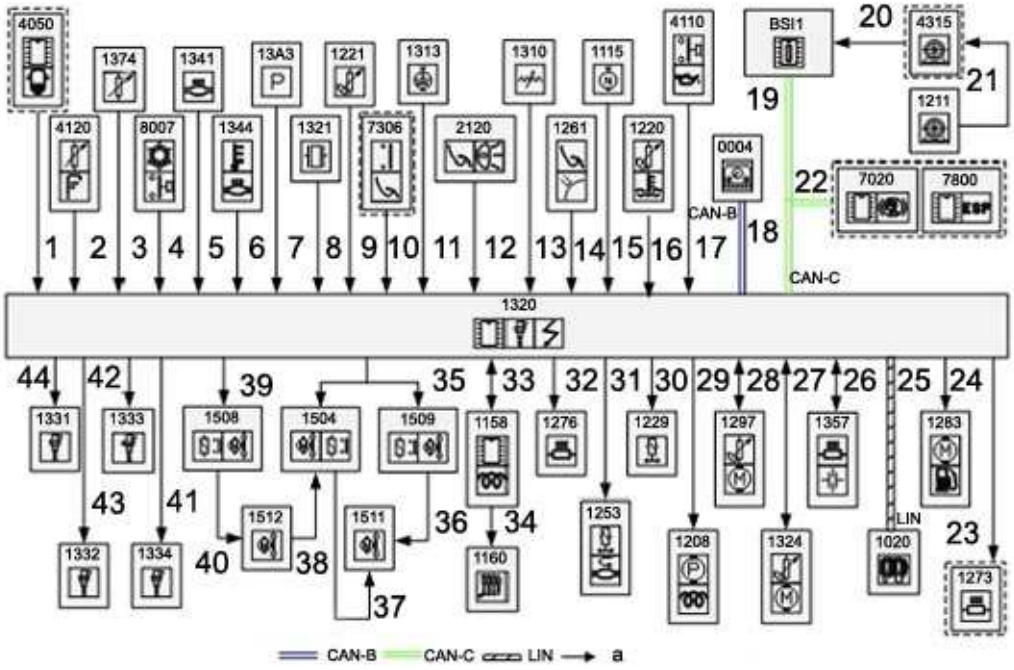

d4ea6rhd

Key : "a" Wire connection.

Components description table	
element	Designation
BSI1	Built-in systems interface
0004	Instrument panel
1020	Alternator
1115	Cylinder reference sensor
1158	Pre-post heating control unit
1160	Pre-heater plugs
1208	diesel injection pump
1211	Fuel gauge pump
1220	Coolant temperature sensor
1221	Diesel fuel thermal sensor
1229	Variable geometry turbocharger pressure regulation solenoid valve
1253	Exhaust gas recirculation (EGR) wired solenoid valve
1261	Accelerator pedal position sensor
1273 (*)	Oil breather re-heat resistor 1
1276	Diesel fuel heater
1283	Fuel additive pump
1297	Electrically-controlled exhaust gas recycling valve
13A3	Inlet air temperature and pressure sensor
1310	Air flowmeter
1313	Engine speed sensor
1320	Engine ECU

1321	Diesel high pressure sensor
1324	Electric mixer with turbocharging air cooler position repeat
1331	Diesel injector - Cylinder No. 1
1332	Diesel injector - Cylinder No. 2
1333	Diesel injector - Cylinder No. 3
1334	Diesel injector - Cylinder No. 4
1341	Particle filter differential pressure sensor
1344	Upstream exhaust gas high temperature sensor
1357	Proportional oxygen sensor
1374	Position repeat sensor for the control diaphragm of the dump valve
1504	Left-hand and right-hand fans serial supply relay
1508	Cooling fan slow speed supply relay
1509	Cooling fan fast speed supply relay
1511	Right-hand fan
1512	Left-hand fan
2120	Brake twin function switch
4050 (*)	Water in fuel sensor
4110	Engine oil pressure switch
4120	Engine oil level sensor
4315 (*)	Fuel gauge
7020 (*)	ABS ECU
7306 (*)	Cruise control safety switch (clutch)
7800 (*)	ESP ECU
8007	Air conditioning pressure switch
(*) According to version	

Description of the exchanges of information			
Connection number	signal	Transmitter / Receiver	Nature of signal
1 (*)	Information on presence of water in the diesel fuel	4050 / 1320	By wire
2	Engine oil level information	4120 / 1320	By wire
3	Dump valve position repeat information	1374 / 1320	By wire
4	Refrigerant pressure information	8007 / 1320	By wire
5	Particle emission filter clogging level information	1341 / 1320	By wire
6	Exhaust gas temperature information	1344 / 1320	By wire
7	Engine intake inlet air temperature information	13A3 / 1320	By wire
	Engine intake inlet air pressure information		
8	Information on the diesel fuel high pressure (Fuel high pressure common injection rail)	1321 / 1320	By wire
9	Diesel fuel temperature information	1221 / 1320	By wire
10 (*)	Clutch pedal pressed information	7306 / 1320	By wire
11	Engine speed and position information	1313 / 1320	By wire
12	Information on depressing the brake pedal	2120 / 1320	By wire
13	Air flow admitted by the engine information	1310 / 1320	By wire
	Inlet air temperature before turbocharger information		
14	Accelerator pedal position information	1261 / 1320	By wire
15	Camshaft position information	1115 / 1320	By wire

16	Engine coolant temperature information	1220 / 1320	By wire
17	Engine oil pressure low information	4110 / 1320	By wire
18	Fault indicator lights on	BSI1 / 0004	CAN-B
	Engine management ECU fault information		
	Particle emission filter clogging level information		
19	Cruise control or speed limiter reference values	BSI1 / 1320	CAN-C
	Quantity of fuel added information		
	Particle emission filter clogging risk information	1320 / BSI1	
	Minimum additive level reached information		
	Engine running information		
	Engine management ECU fault information		
	Request for activation of the heated rear screen to assist with regeneration of the particle emission filter		
20 (*)	Fuel gauge signals from the pump gauge module and from the secondary fuel gauge	4315 / BSI1	By wire
21 (*)	Fuel gauge signal from the pump gauge module	1211 / (4315 - BSI1)	By wire
22 (*)	Vehicle speed information	(7020 - 7800) / 1320	CAN-C
		(7020 - 7800) / BSI1	
23 (*)	Control of the heater element for the oil vapours resuction 1	1320 / 1273	By wire
24	Control of the fuel additive pump	1320 / 1283	By wire
25	Control of the alternator	1320 / 1020	LIN
	Alternator type information	1020 / 1320	
	Alternator faults information		
26	Proportional oxygen sensor heating control	1320 / 1357	By wire
	Information on mixture coming from the oxygen sensor	1357 / 1320	By wire
27	Turbocharging air cooler electric mixer control	1320 / 1324	Open cycle ratio
	Turbocharging air cooler electric mixer position information	1324 / 1320	By wire
28	Electrical control of the EGR electrovalve	1320 / 1297	Open cycle ratio
	Electric EGR solenoid valve position information	1297 / 1320	By wire
	EGR exchanger by-pass position information		
29	Control of the fuel flow regulator	1320 / 1208	Open cycle ratio
30	Control of the turbocharger pressure regulation electrovalve	1320 / 1229	Open cycle ratio
31	Exhaust gas recirculation wired solenoid valve control	1320 / 1253	Open cycle ratio
32	Control of the diesel fuel heater	1320 / 1276	By wire
33	Pre-post heating relay control	1320 / 1158	By wire
	Pre-post heat unit diagnostics information	1158 / 1320	By wire

34	Control of pre-heater plugs	1158 / 1160	By wire
35	High-speed control	1320 / 1504 1320 / 1509	By wire
36	Right-hand fan high speed supply	1509 / 1511	By wire
37	Right-hand fan low speed supply	1504 / 1511	By wire
38	Right-hand fan low speed supply	1512 / 1504	By wire
39	Low speed control High-speed control	1320 / 1508	By wire
40	Left-hand fan low speed or high speed supply	1508 / 1512	By wire
41	Fuel injector control cylinder 4	1320 / 1334	By wire
42	Fuel injector control cylinder 3	1320 / 1333	By wire
43	Fuel injector control cylinder 2	1320 / 1332	By wire
44	Fuel injector control cylinder 1	1320 / 1331	By wire
(*) According to version			

HELP IN DIAGNOSIS : ENGINE HESITATION - ENGINE DV6C (CONTINENTAL SID 807) BRANCH 2

1 - PRESENTATION : DOCUMENT

This document groups together the main diagnostic information for the vehicle concerned and supplements the diagnostic procedures in the diagnostic equipment.

2 - INSTRUCTIONS

General procedure for using the diagnostic assistance document and the diagnostic tool.

3 - GENERAL

Flow chart : Hdi direct injection system CONTINENTAL SID 807 (engine DV6C).

Operating methods : Hdi direct injection system CONTINENTAL SID 807 (engine DV6C).

4 - SPECIAL OPERATING FEATURES

> **WARNING :** On vehicles with hands-free access and starting, put the "hands-free" remote control in the electronic key reader so that all the operations and diagnostic services of the engine management ECU are functional

5 - PRELIMINARY CHECKS

Check the battery voltage.

Visually check the condition of the battery.

Check the connections of the battery.

6 - PROCEDURE BY FAULT CODES

The fault code tables contain all the fault codes relating the system.

6 - 1 - Table : Fault codes - Engine DV6C (CONTINENTAL SID 807) branch 2

> **WARNING :** A fault code followed by the mention "After-Sales" appears in the case of a problem that is likely to be detected by the customer. These fault codes should be dealt with only if the complaint indicated by the customer corresponds to one of the possible customer complaints associated with the fault code (Refer to the fault codes table to check the faulty component concerned)

Two cases are possible :

- The fault code corresponds to the customer complaint indicated : Deal with fault code

- The fault code does not correspond to the customer complaint indicated : Do not deal with the fault code

> **WARNING :** It is possible for 2 fault codes bearing the same title to be present at the same time : One fault code with the mention "After-Sales" and the other without. These 2 fault codes are recorded from similar strategies. In this case, deal with the fault code that is without the mention "After-Sales"

Fault codes	After sales description of the fault code	Rectificatio priority
P0001	Control of the fuel flow regulator : Open circuit	1
P0002	Control of the fuel flow regulator : Incoherence of the control current of the flow regulation valve	1
P0003	Control of the fuel flow regulator : Short circuit to earth	1
P0004	Control of the fuel flow regulator : Short circuit to positive	1
P0069	Coherence fault : At idle, lack of coherence between the manifold inlet pressure measurement and the atmospheric pressure measurement	3
P0070	Intersystem CAN network : Outside temperature value received via the CAN not valid	1
P0087	Fuel circuit : The pressure measured in the injection rail is less than the setting	1
P0088	Fuel circuit : Pressure measured in the injection rail above the reference	3
P0093	Fuel circuit : Incoherence on the fuel pressure with the flow regulator jammed open	3
P0100	Air flow measure : Quantity of air above the maximum threshold	3
P0117	Engine water temperature measure : Short circuit to earth : Value too high	1
P0118	Engine water temperature measure : Short circuit to positive or open circuit : Value too low	1
P0182	Fuel temperature measure : Short circuit to earth : Value too high	1
P0183	Fuel temperature measure : Short circuit to positive or open circuit : Value too low	1
P0190	Fuel circuit : When stopped, the pressure of the injection rail decreases too slowly	3
P0191	Measurement of the pressure in the fuel injection rail : Voltage variation outside the tolerance	3
P0192	Measurement of the pressure in the fuel injection rail : Short circuit to earth : Pressure too low	1
P0193	Measurement of the pressure in the fuel injection rail : Short circuit to positive : Pressure too high	1
P0201	Injector 1 signal. : Open circuit	1
P0202	Injector 2 signal. : Open circuit	1
P0203	Injector 3 signal. : Open circuit	1

P0204	Injector 4 signal. : Open circuit	1
P0234	Charge pressure regulation : Air pressure above the reference value	2
P0237	Measurement of the manifold inlet pressure : Short circuit to earth : Pressure too low	1
P0238	Measurement of the manifold inlet pressure : Short circuit to positive or open circuit : Pressure too high	1
P0262	Injector 1 signal. : Short circuit between two wires	1
P0263	No. 1 cylinder : Injector resetting outside tolerance	3
P0265	Injector 2 signal. : Short circuit between two wires	1
P0266	No. 2 cylinder : Injector resetting outside tolerance	3
P0268	Injector 3 signal. : Short circuit between two wires	1
P0269	No. 3 cylinder : Injector resetting outside tolerance	3
P0271	Injector 4 signal. : Short circuit between two wires	1
P0272	No. 4 cylinder : Injector resetting outside tolerance	3
P0299	Charge pressure regulation : Air pressure below the reference value	2
P0335	Engine speed measurement : Loss of signal	1
P0336	Engine speed measurement : Signal absent when starting	1
P0337	Engine speed measurement : Signal inconsistent, either too many or not enough teeth seen on one rev	1
P0339	Engine speed measurement : Sudden increase in the measurement	1
P0406	Measurement of the position of the EGR valve : Short circuit to positive	1
P0409	EGR valve : Valve detected jammed closed during the ECU switching to dormant mode phase	2
P0421	Catalytic converter : Detected absent	-
P0489	EGR valve : Position incorrect (too open)	2
P0490	EGR valve : Position incorrect (too closed)	2
P0500	Intersystem CAN network : Speed information incorrect or absent	1
P0516	Battery temperature sensor : Voltage below the minimum threshold	1
P0517	Battery temperature sensor : Voltage higher than the maximum threshold	1
P0562	Battery voltage measurement : System voltage too low	1
P0563	Battery voltage measurement : System voltage too high	1
P0606	Computer : Fault internal to "Watchdog" (CMM)	1
P0620	Alternator : Alternator electrical fault	1
P0625	Alternator : Alternator low voltage fault	1
P0626	Alternator : Alternator high voltage fault	1
P062B	Downloading / Configuration : Downloading of the resetting of the injectors not carried out	1
P062D	Injectors control : Injection bank supply voltage outside tolerance	1
P0630	Downloading / Configuration : VIN numbering fault	1
	5V sensors supply n°1 (Air conditioning pressure	

P0658	sensor, Rail pressure sensor, EGR valve position sensor, Variable geometry turbocharger position sensor, Air mixer position sensor, Turbocharging pressure sensor, Particle emission filter differential pressure sensor, EGR exchanger bypass position sensor) : Voltage too low	1
P0659	5V sensor supply no. 1 (Air conditioning pressure sensor ; Rail pressure sensor ; EGR valve position sensor ; Variable geometry turbo position sensor ; Air mixer position sensor ; Supercharging pressure sensor ; Particle filter differential pressure sensor ; EGR exchanger bypass position sensor) : Voltage too high	1
P065A	Alternator : Alternator mechanical fault	1
P0667	ECU internal temperature measurement : Voltage variation outside the tolerance	1
P0668	ECU internal temperature measurement : Short circuit to earth	1
P0669	ECU internal temperature measurement : Short circuit to positive	1
P0703	Measurement of the brake pedal position : Incoherence between the two brake sensors detected under acceleration	3
P0704	Measurement of the clutch pedal position : Absence of pedal presses on a great variation of speed	3
P0831	Measurement of the clutch pedal position : No pressing of the pedal while driving for a certain time	3
P0A1A	Alternator : Alternator communication fault	1
P0A3B	Alternator : Alternator temperature fault	1
P0A88	Battery : Voltage of the system below the minimum threshold	1
P0A89	Battery : Voltage of the system above the maximum threshold	1
P1114	Computer : Stopping of the engine by injection cut-off fault	3
P1162	EGR valve : Valve detected as being jammed open during the ECU sleep phase	2
P1166	Fuel circuit : Maximum rail pressure exceeded	3
P1176	Fuel circuit : Pressure measured in the injection rail higher than the reference with the flow regulator stuck (Anti-sticking test)	3
P1192	Computer : Stopping of the engine by high pressure pump supply cut-off fault	3
P1199	Fuel circuit : Incoherence on the reserve fuel pressure (Nearing no fuel)	3
P1294	Fuel circuit : Critical maximum rail pressure exceeded at certain points	3
P12A1	No. 1 cylinder : Injector injects too much or remains jammed in the open position	3
	No. 1 cylinder : Injector not injecting enough, or poor	

P12A2	cylinder compression	3
P12A4	No. 2 cylinder : Injector injects too much or remains jammed in the open position	3
P12A5	No. 2 cylinder : Injector not injecting enough, or poor cylinder compression	3
P12A7	No. 3 cylinder : Injector injects too much or remains jammed in the open position	3
P12A8	No. 3 cylinder : Injector not injecting enough, or poor cylinder compression	3
P12AA	No. 4 cylinder : Injector injects too much or remains jammed in the open position	3
P12AB	No. 4 cylinder : Injector not injecting enough, or poor cylinder compression	3
P12B3	EGR valve : Position incorrect (Too open) (Service)	4
P12B4	EGR valve : Position incorrect (Too closed) (Service)	4
P1349	Engine preheating : Short circuit to positive or open circuit on the relay control	1
P1350	Engine preheating : Short circuit to earth on the relay control	1
P1352	Engine preheating : Fault on the pre-heating relay or glow plugs	1
P1459	EGR valve : Blocked pipe detected	-
P1490	Particle filter : Detected overloaded	3
P1498	Air metering valve : Position incorrect (Too closed) (Service)	4
P1499	Air metering valve : Position incorrect (Too open) (Service)	4
P14AA	Air metering valve : Failure of the first programming operations	2
P160A	Downloading / Configuration : Homologation no. configuration fault	1
P1613	Downloading / Configuration : Downloading fault of the configuration of the ECU	1
P1621	Computer : Software redundancy fault at the injection (Level 2)	1
P1631	Computer : Internal fault (injection with no load)	1
P1641	Computer : Failure of the initialisation of the injector bank, or harness fault	1
P1696	Controlled engine start and stop : Simultaneous starting and stopping request	1
P16A0	engine : Detection of runaway caused by oil ingestion after stalling	3
P2146	Control of injectors : Injection bank 1 : Short circuit	1
P2148	Injectors control : Injection bank 1 : Voltage too high	1
P2175	Air metering valve : Position incorrect (too closed)	2
P2227	Measurement of the atmospheric pressure : Voltage variation outside the tolerance	1
P2228	Measurement of the atmospheric pressure : Value too low	1

P2229	Measurement of the atmospheric pressure : Value too high	1
P2265	Water in diesel sensor : Open circuit or short circuit to the plus	1
P2291	Starting monitoring : Pressure increase in the injection rail too slow when starting	3
P2299	Measurement of the accelerator pedal position : Pedal jammed or applied at the same time as the brake pedal	3
P2413	Control of the EGR valve : Overheating or excess current	1
P242F	Particle filter : Detected clogged	3
P2685	5V sensor supply no. 3 (Engine speed sensor ; Camshaft sensor) : Voltage too low	1
P2686	5V sensor supply no. 3 (Engine speed sensor ; Camshaft sensor) : Voltage too high	1
P3007	Air circuit : Air flow lower than recommended	3
P3008	Air circuit : Air flow higher than recommended	3
P3026	Air circuit : Air flow higher than recommended (Service)	4
P3027	Air circuit : Air flow lower than recommended (Service)	4
U0073	Intersystem CAN network : CAN in error	1
U0121	Intersystem CAN network : Absence of communication with the ABS/ESP ECU	1
U0140	Intersystem CAN network : Absence of communication with the BSI ECU	1
U0315	Intersystem CAN network : Error in length or prohibited value on the ABS/ESP datastream	1
U0322	Intersystem CAN network : Error in length or prohibited value on the BSI datastream	1
U1000	Computer : The engine ECU is detected mute by one of the ECUs on the network	1
U1113	Intersystem CAN network : Absence of communication with the ABS/ESP ECU	1
U1118	Intersystem CAN network : Absence of communication with the BSI ECU	1
U1121	Intersystem CAN network : Absence of communication with the electric power steering ECU	1
U1133	LIN : The reversible alternator is confirmed absent	1
U1138	Intersystem CAN network : Absence of communication with the controlled clutch ECU	1
U1218	Intersystem CAN network : One of the parameters present in a datastream sent by the BSI is invalid	1
U1221	Intersystem CAN network : Prohibited value of the electric power steering datastream	1
U1313	Intersystem CAN network : Error in length or prohibited value on the ABS/ESP datastream	1
U1318	Intersystem CAN network : Error in length or prohibited value on the BSI datastream	1
U1321	Intersystem CAN network : Error of length or prohibited value of the datastream transmitted by the electric	1

	power steering ECU	
U1333	LIN : Error in length or prohibited value of the data from the voltage retention device	1
U1338	Intersystem CAN network : Error of length or prohibited value of the datastream transmitted by the controlled clutch ECU	1
U1400	Alternator LIN network : Registering of a fault on the LIN network	1
U1401	Alternator LIN network : Recording of a fault on the slave node of the Alternator LIN	1

6 - 2 - Table : Fault codes - Automatic gearbox ECU

Deal with the fault codes present in expert mode.

6 - 3 - Table : Fault codes - Controlled manual gearbox ECU

Deal with the fault codes present in expert mode.

7 - CHECK AFTER OPERATION

Put the vehicle under the conditions of appearance as described in the customer complaint, so as to check and confirm that the customer complaint has disappeared.

Use the information linked to the fault code diagnosed, from the chapter "Table : fault codes".

INSTRUCTIONS : DIAGNOSTIC ASSISTANCE DOCUMENT

Aid to diagnosis can be used in the following modes :

- "diagnostic mode" as an addition to the diagnostic methods that are available in the diagnostic tool
- "expert mode" as an addition to the functions made available in the diagnostic tool

Once you are familiar with the customer complaint, keep to the sequence of the following stages in the repair diagnosis process.

1 - TAKING ACCOUNT OF THE CUSTOMER COMPLAINT

Be aware of the customer complaint and of the conditions of appearance as described on reception of the vehicle.

Reproduce the customer complaint.

2 - DIAGNOSTIC

When using the diagnostic tool to access diagnosis (including aid to diagnosis and methods) :

- Select : "Power unit"
- Select : "Engine"

2 - 1 - Pre-diagnosis

Consult the aid to diagnosis to arrive at the prediagnosis.

Methodology :

- Refer to chapter : Special operating features (*)
- Read the operating principles of the system in this chapter : General
- Carry out the operations described in the chapter : Preliminary checks

(*) The user may perceive certain operating features as malfunctions. The operating features correspond to normal operation and are in conformity with the vehicle specification. The list of operating features may vary depending on the vehicle's trim level.

2 - 2 - Straight to the point

Check whether the customer complaint flagged up can be resolved with the aid of a "straight to the point".

2 - 3 - Procedure by fault codes

The aid to diagnosis lists all the fault codes that relate to the customer complaint.

Consult the chapter : Table of fault codes.

Methodology :

- Consult the information relating to the fault codes
- If there are multiple fault codes, deal with them in the order of priority defined in the aid to diagnosis, indexing the lowest in priority
- Select the method by fault codes from the diagnostic tool

2 - 4 - Expert mode

If it is not possible to demonstrate the part that is faulty using a method :

- Look in the aid to diagnosis for the information on how the custom complaint relates to the fault codes in the chapter "Method by fault codes"
- If necessary use the functions made available in the diagnostic tool (Reading of fault codes, Parameter measures and Actuator tests)

3 - REPAIR

Repair the vehicle. (Repair or replacement of the faulty component).

4 - CHECK: AFTER REPAIR

Carry out the operations described in the chapter : Checks after repair.

Put the vehicle under the conditions of appearance as described in the customer complaint, so as to check and confirm that the customer complaint has disappeared.

Methodology :

- Use the information linked to the fault code diagnosed, from the chapter "Table : fault codes"
- Perform any additional checks as required by the Aid to Diagnosis so as to prevent the causes from recurring, depending on the origin of the problem or on the repairs done on the vehicle

FLOW CHART : HDI DIRECT INJECTION SYSTEM CONTINENTAL SID 807 (ENGINE DV6C)

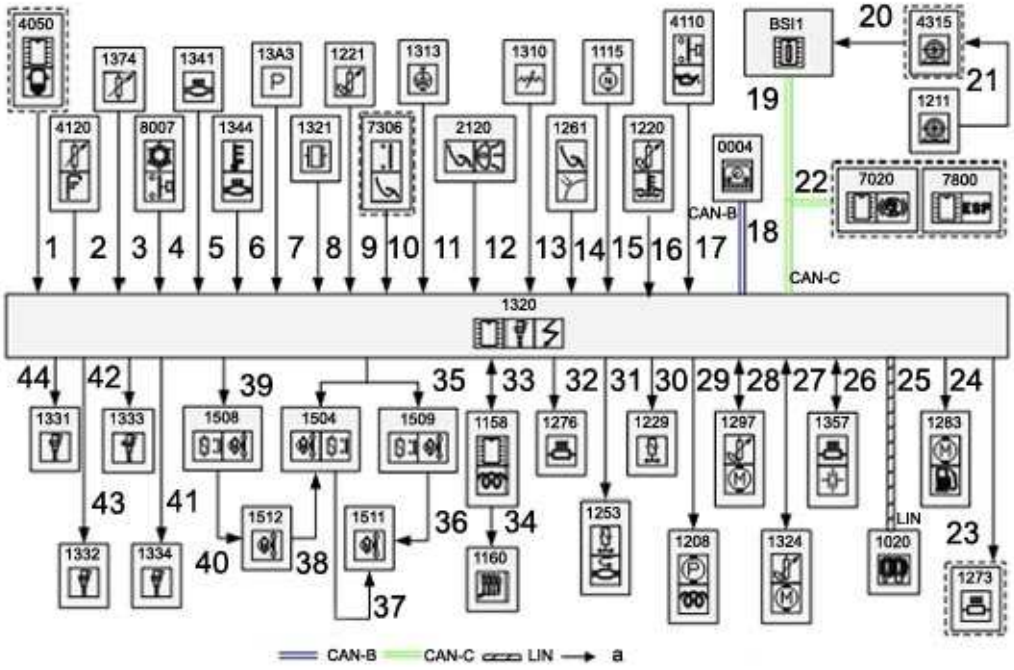

d4ea6rhd

Key : "a" Wire connection.

Components description table	
element	Designation
BSI1	Built-in systems interface
0004	Instrument panel
1020	Alternator
1115	Cylinder reference sensor
1158	Pre-post heating control unit
1160	Pre-heater plugs
1208	diesel injection pump
1211	Fuel gauge pump
1220	Coolant temperature sensor
1221	Diesel fuel thermal sensor
1229	Variable geometry turbocharger pressure regulation solenoid valve
1253	Exhaust gas recirculation (EGR) wired solenoid valve
1261	Accelerator pedal position sensor
1273 (*)	Oil breather re-heat resistor 1
1276	Diesel fuel heater
1283	Fuel additive pump
1297	Electrically-controlled exhaust gas recycling valve
13A3	Inlet air temperature and pressure sensor
1310	Air flowmeter
1313	Engine speed sensor
1320	Engine ECU

1321	Diesel high pressure sensor
1324	Electric mixer with turbocharging air cooler position repeat
1331	Diesel injector - Cylinder No. 1
1332	Diesel injector - Cylinder No. 2
1333	Diesel injector - Cylinder No. 3
1334	Diesel injector - Cylinder No. 4
1341	Particle filter differential pressure sensor
1344	Upstream exhaust gas high temperature sensor
1357	Proportional oxygen sensor
1374	Position repeat sensor for the control diaphragm of the dump valve
1504	Left-hand and right-hand fans serial supply relay
1508	Cooling fan slow speed supply relay
1509	Cooling fan fast speed supply relay
1511	Right-hand fan
1512	Left-hand fan
2120	Brake twin function switch
4050 (*)	Water in fuel sensor
4110	Engine oil pressure switch
4120	Engine oil level sensor
4315 (*)	Fuel gauge
7020 (*)	ABS ECU
7306 (*)	Cruise control safety switch (clutch)
7800 (*)	ESP ECU
8007	Air conditioning pressure switch
(*) According to version	

Description of the exchanges of information			
Connection number	signal	Transmitter / Receiver	Nature of signal
1 (*)	Information on presence of water in the diesel fuel	4050 / 1320	By wire
2	Engine oil level information	4120 / 1320	By wire
3	Dump valve position repeat information	1374 / 1320	By wire
4	Refrigerant pressure information	8007 / 1320	By wire
5	Particle emission filter clogging level information	1341 / 1320	By wire
6	Exhaust gas temperature information	1344 / 1320	By wire
7	Engine intake inlet air temperature information	13A3 / 1320	By wire
	Engine intake inlet air pressure information		
8	Information on the diesel fuel high pressure (Fuel high pressure common injection rail)	1321 / 1320	By wire
9	Diesel fuel temperature information	1221 / 1320	By wire
10 (*)	Clutch pedal pressed information	7306 / 1320	By wire
11	Engine speed and position information	1313 / 1320	By wire
12	Information on depressing the brake pedal	2120 / 1320	By wire
13	Air flow admitted by the engine information	1310 / 1320	By wire
	Inlet air temperature before turbocharger information		
14	Accelerator pedal position information	1261 / 1320	By wire
15	Camshaft position information	1115 / 1320	By wire

16	Engine coolant temperature information	1220 / 1320	By wire
17	Engine oil pressure low information	4110 / 1320	By wire
18	Fault indicator lights on	BSI1 / 0004	CAN-B
	Engine management ECU fault information		
	Particle emission filter clogging level information		
19	Cruise control or speed limiter reference values	BSI1 / 1320	CAN-C
	Quantity of fuel added information		
	Particle emission filter clogging risk information	1320 / BSI1	
	Minimum additive level reached information		
	Engine running information		
	Engine management ECU fault information		
	Request for activation of the heated rear screen to assist with regeneration of the particle emission filter		
20 (*)	Fuel gauge signals from the pump gauge module and from the secondary fuel gauge	4315 / BSI1	By wire
21 (*)	Fuel gauge signal from the pump gauge module	1211 / (4315 - BSI1)	By wire
22 (*)	Vehicle speed information	(7020 - 7800) / 1320	CAN-C
		(7020 - 7800) / BSI1	
23 (*)	Control of the heater element for the oil vapours resuction 1	1320 / 1273	By wire
24	Control of the fuel additive pump	1320 / 1283	By wire
25	Control of the alternator	1320 / 1020	LIN
	Alternator type information	1020 / 1320	
	Alternator faults information		
26	Proportional oxygen sensor heating control	1320 / 1357	By wire
	Information on mixture coming from the oxygen sensor	1357 / 1320	By wire
27	Turbocharging air cooler electric mixer control	1320 / 1324	Open cycle ratio
	Turbocharging air cooler electric mixer position information	1324 / 1320	By wire
28	Electrical control of the EGR electrovalve	1320 / 1297	Open cycle ratio
	Electric EGR solenoid valve position information	1297 / 1320	By wire
	EGR exchanger by-pass position information		
29	Control of the fuel flow regulator	1320 / 1208	Open cycle ratio
30	Control of the turbocharger pressure regulation electrovalve	1320 / 1229	Open cycle ratio
31	Exhaust gas recirculation wired solenoid valve control	1320 / 1253	Open cycle ratio
32	Control of the diesel fuel heater	1320 / 1276	By wire
33	Pre-post heating relay control	1320 / 1158	By wire
	Pre-post heat unit diagnostics information	1158 / 1320	By wire

34	Control of pre-heater plugs	1158 / 1160	By wire
35	High-speed control	1320 / 1504 1320 / 1509	By wire
36	Right-hand fan high speed supply	1509 / 1511	By wire
37	Right-hand fan low speed supply	1504 / 1511	By wire
38	Right-hand fan low speed supply	1512 / 1504	By wire
39	Low speed control High-speed control	1320 / 1508	By wire
40	Left-hand fan low speed or high speed supply	1508 / 1512	By wire
41	Fuel injector control cylinder 4	1320 / 1334	By wire
42	Fuel injector control cylinder 3	1320 / 1333	By wire
43	Fuel injector control cylinder 2	1320 / 1332	By wire
44	Fuel injector control cylinder 1	1320 / 1331	By wire
(*) According to version			

HELP IN DIAGNOSIS : MALFUNCTIONING OF THE ENGINE WHEN IDLING - ENGINE DV6C (CONTINENTAL SID 807) BRANCH 2

1 - PRESENTATION : DOCUMENT

This document groups together the main diagnostic information for the vehicle concerned and supplements the diagnostic procedures in the diagnostic equipment.

2 - INSTRUCTIONS

General procedure for using the diagnostic assistance document and the diagnostic tool.

3 - GENERAL

Flow chart : Hdi direct injection system CONTINENTAL SID 807 (engine DV6C).

Operating methods : Hdi direct injection system CONTINENTAL SID 807 (engine DV6C).

4 - SPECIAL OPERATING FEATURES

> **WARNING :** On vehicles with hands-free access and starting, put the "hands-free" remote control in the electronic key reader so that all the operations and diagnostic services of the engine management ECU are functional

5 - PRELIMINARY CHECKS

Check the battery voltage.

Visually check the condition of the battery.

Check the connections of the battery.

6 - PROCEDURE BY FAULT CODES

The fault code tables contain all the fault codes relating the system.

6 - 1 - Table : Fault codes - Engine DV6C (CONTINENTAL SID 807) branch 2

> **WARNING :** A fault code followed by the mention "After-Sales" appears in the case of a problem that is likely to be detected by the customer. These fault codes should be dealt with only if the complaint indicated by the customer corresponds to one of the possible customer complaints associated with the fault code (Refer to the fault codes table to check the faulty component concerned)

Two cases are possible :

- The fault code corresponds to the customer complaint indicated : Deal with fault code

- The fault code does not correspond to the customer complaint indicated : Do not deal with the fault code

> **WARNING :** It is possible for 2 fault codes bearing the same title to be present at the same time : One fault code with the mention "After-Sales" and the other without. These 2 fault codes are recorded from similar strategies. In this case, deal with the fault code that is without the mention "After-Sales"

Fault codes	After sales description of the fault code	Rectification priority
P0201	Injector 1 signal. : Open circuit	1
P0202	Injector 2 signal. : Open circuit	1
P0203	Injector 3 signal. : Open circuit	1
P0204	Injector 4 signal. : Open circuit	1
P0421	Catalytic converter : Detected absent	-
P0562	Battery voltage measurement : System voltage too low	1
P0563	Battery voltage measurement : System voltage too high	1
P0625	Alternator : Alternator low voltage fault	1
P0626	Alternator : Alternator high voltage fault	1
P0A88	Battery : Voltage of the system below the minimum threshold	1
P0A89	Battery : Voltage of the system above the maximum threshold	1
P1114	Computer : Stopping of the engine by injection cut-off fault	3
P1192	Computer : Stopping of the engine by high pressure pump supply cut-off fault	3
P12A2	No. 1 cylinder : Injector not injecting enough, or poor cylinder compression	3
P12A5	No. 2 cylinder : Injector not injecting enough, or poor cylinder compression	3
P12A8	No. 3 cylinder : Injector not injecting enough, or poor cylinder compression	3
P12AB	No. 4 cylinder : Injector not injecting enough, or poor cylinder compression	3
P1349	Engine preheating : Short circuit to positive or open circuit on the relay control	1
P1350	Engine preheating : Short circuit to earth on the relay control	1
P1352	Engine preheating : Fault on the pre-heating relay or glow plugs	1
P1459	EGR valve : Blocked pipe detected	-

6 - 2 - Table : Fault codes - Automatic gearbox ECU

Deal with the fault codes present in expert mode.

6 - 3 - Table : Fault codes - Controlled manual gearbox ECU

Deal with the fault codes present in expert mode.

7 - CHECK AFTER OPERATION

Put the vehicle under the conditions of appearance as described in the customer complaint, so as to check and confirm that the customer complaint has disappeared.

Use the information linked to the fault code diagnosed, from the chapter "Table : fault codes".

INSTRUCTIONS : DIAGNOSTIC ASSISTANCE DOCUMENT

Aid to diagnosis can be used in the following modes :

- "diagnostic mode" as an addition to the diagnostic methods that are available in the diagnostic tool
- "expert mode" as an addition to the functions made available in the diagnostic tool

Once you are familiar with the customer complaint, keep to the sequence of the following stages in the repair diagnosis process.

1 - TAKING ACCOUNT OF THE CUSTOMER COMPLAINT

Be aware of the customer complaint and of the conditions of appearance as described on reception of the vehicle.

Reproduce the customer complaint.

2 - DIAGNOSTIC

When using the diagnostic tool to access diagnosis (including aid to diagnosis and methods) :

- Select : "Power unit"
- Select : "Engine"

2 - 1 - Pre-diagnosis

Consult the aid to diagnosis to arrive at the prediagnosis.

Methodology :

- Refer to chapter : Special operating features (*)
- Read the operating principles of the system in this chapter : General
- Carry out the operations described in the chapter : Preliminary checks

(*) The user may perceive certain operating features as malfunctions. The operating features correspond to normal operation and are in conformity with the vehicle specification. The list of operating features may vary depending on the vehicle's trim level.

2 - 2 - Straight to the point

Check whether the customer complaint flagged up can be resolved with the aid of a "straight to the point".

2 - 3 - Procedure by fault codes

The aid to diagnosis lists all the fault codes that relate to the customer complaint.

Consult the chapter : Table of fault codes.

Methodology :

- Consult the information relating to the fault codes
- If there are multiple fault codes, deal with them in the order of priority defined in the aid to diagnosis, indexing the lowest in priority
- Select the method by fault codes from the diagnostic tool

2 - 4 - Expert mode

If it is not possible to demonstrate the part that is faulty using a method :

- Look in the aid to diagnosis for the information on how the custom complaint relates to the fault codes in the chapter "Method by fault codes"
- If necessary use the functions made available in the diagnostic tool (Reading of fault codes, Parameter measures and Actuator tests)

3 - REPAIR

Repair the vehicle. (Repair or replacement of the faulty component).

4 - CHECK: AFTER REPAIR

Carry out the operations described in the chapter : Checks after repair.

Put the vehicle under the conditions of appearance as described in the customer complaint, so as to check and confirm that the customer complaint has disappeared.

Methodology :

- Use the information linked to the fault code diagnosed, from the chapter "Table : fault codes"
- Perform any additional checks as required by the Aid to Diagnosis so as to prevent the causes from recurring, depending on the origin of the problem or on the repairs done on the vehicle

FLOW CHART : HDI DIRECT INJECTION SYSTEM CONTINENTAL SID 807 (ENGINE DV6C)

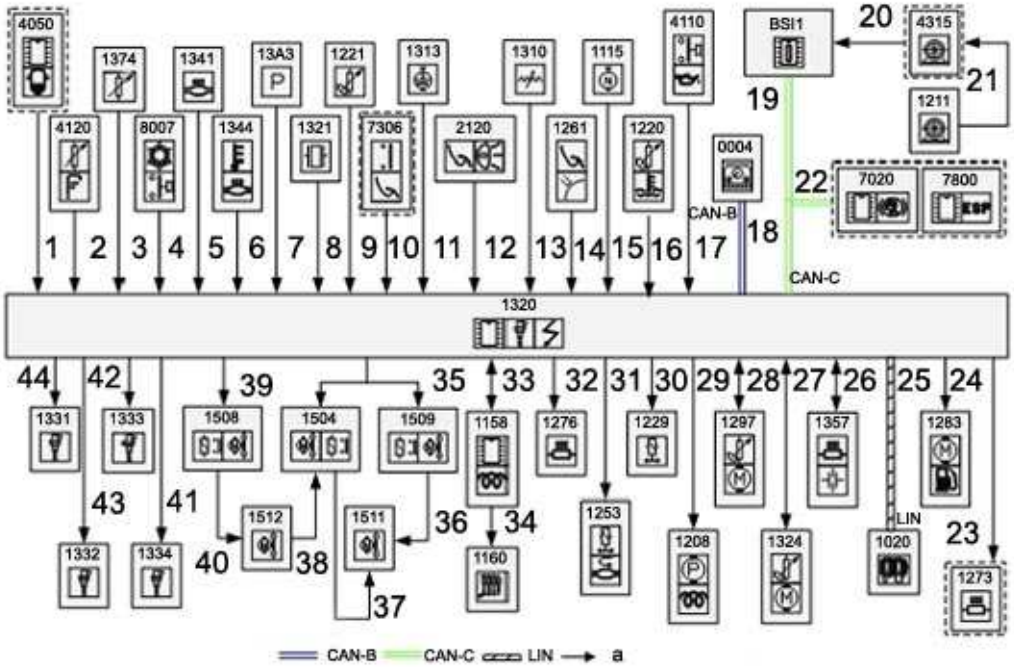

d4ea6rhd

Key : "a" Wire connection.

Components description table	
element	Designation
BSI1	Built-in systems interface
0004	Instrument panel
1020	Alternator
1115	Cylinder reference sensor
1158	Pre-post heating control unit
1160	Pre-heater plugs
1208	diesel injection pump
1211	Fuel gauge pump
1220	Coolant temperature sensor
1221	Diesel fuel thermal sensor
1229	Variable geometry turbocharger pressure regulation solenoid valve
1253	Exhaust gas recirculation (EGR) wired solenoid valve
1261	Accelerator pedal position sensor
1273 (*)	Oil breather re-heat resistor 1
1276	Diesel fuel heater
1283	Fuel additive pump
1297	Electrically-controlled exhaust gas recycling valve
13A3	Inlet air temperature and pressure sensor
1310	Air flowmeter
1313	Engine speed sensor
1320	Engine ECU

1321	Diesel high pressure sensor
1324	Electric mixer with turbocharging air cooler position repeat
1331	Diesel injector - Cylinder No. 1
1332	Diesel injector - Cylinder No. 2
1333	Diesel injector - Cylinder No. 3
1334	Diesel injector - Cylinder No. 4
1341	Particle filter differential pressure sensor
1344	Upstream exhaust gas high temperature sensor
1357	Proportional oxygen sensor
1374	Position repeat sensor for the control diaphragm of the dump valve
1504	Left-hand and right-hand fans serial supply relay
1508	Cooling fan slow speed supply relay
1509	Cooling fan fast speed supply relay
1511	Right-hand fan
1512	Left-hand fan
2120	Brake twin function switch
4050 (*)	Water in fuel sensor
4110	Engine oil pressure switch
4120	Engine oil level sensor
4315 (*)	Fuel gauge
7020 (*)	ABS ECU
7306 (*)	Cruise control safety switch (clutch)
7800 (*)	ESP ECU
8007	Air conditioning pressure switch
(*) According to version	

Description of the exchanges of information			
Connection number	signal	Transmitter / Receiver	Nature of signal
1 (*)	Information on presence of water in the diesel fuel	4050 / 1320	By wire
2	Engine oil level information	4120 / 1320	By wire
3	Dump valve position repeat information	1374 / 1320	By wire
4	Refrigerant pressure information	8007 / 1320	By wire
5	Particle emission filter clogging level information	1341 / 1320	By wire
6	Exhaust gas temperature information	1344 / 1320	By wire
7	Engine intake inlet air temperature information	13A3 / 1320	By wire
	Engine intake inlet air pressure information		
8	Information on the diesel fuel high pressure (Fuel high pressure common injection rail)	1321 / 1320	By wire
9	Diesel fuel temperature information	1221 / 1320	By wire
10 (*)	Clutch pedal pressed information	7306 / 1320	By wire
11	Engine speed and position information	1313 / 1320	By wire
12	Information on depressing the brake pedal	2120 / 1320	By wire
13	Air flow admitted by the engine information	1310 / 1320	By wire
	Inlet air temperature before turbocharger information		
14	Accelerator pedal position information	1261 / 1320	By wire
15	Camshaft position information	1115 / 1320	By wire

16	Engine coolant temperature information	1220 / 1320	By wire
17	Engine oil pressure low information	4110 / 1320	By wire
18	Fault indicator lights on	BSI1 / 0004	CAN-B
	Engine management ECU fault information		
	Particle emission filter clogging level information		
19	Cruise control or speed limiter reference values	BSI1 / 1320	CAN-C
	Quantity of fuel added information		
	Particle emission filter clogging risk information	1320 / BSI1	
	Minimum additive level reached information		
	Engine running information		
	Engine management ECU fault information		
	Request for activation of the heated rear screen to assist with regeneration of the particle emission filter		
20 (*)	Fuel gauge signals from the pump gauge module and from the secondary fuel gauge	4315 / BSI1	By wire
21 (*)	Fuel gauge signal from the pump gauge module	1211 / (4315 - BSI1)	By wire
22 (*)	Vehicle speed information	(7020 - 7800) / 1320	CAN-C
		(7020 - 7800) / BSI1	
23 (*)	Control of the heater element for the oil vapours resuction 1	1320 / 1273	By wire
24	Control of the fuel additive pump	1320 / 1283	By wire
25	Control of the alternator	1320 / 1020	LIN
	Alternator type information	1020 / 1320	
	Alternator faults information		
26	Proportional oxygen sensor heating control	1320 / 1357	By wire
	Information on mixture coming from the oxygen sensor	1357 / 1320	By wire
27	Turbocharging air cooler electric mixer control	1320 / 1324	Open cycle ratio
	Turbocharging air cooler electric mixer position information	1324 / 1320	By wire
28	Electrical control of the EGR electrovalve	1320 / 1297	Open cycle ratio
	Electric EGR solenoid valve position information	1297 / 1320	By wire
	EGR exchanger by-pass position information		
29	Control of the fuel flow regulator	1320 / 1208	Open cycle ratio
30	Control of the turbocharger pressure regulation electrovalve	1320 / 1229	Open cycle ratio
31	Exhaust gas recirculation wired solenoid valve control	1320 / 1253	Open cycle ratio
32	Control of the diesel fuel heater	1320 / 1276	By wire
33	Pre-post heating relay control	1320 / 1158	By wire
	Pre-post heat unit diagnostics information	1158 / 1320	By wire

34	Control of pre-heater plugs	1158 / 1160	By wire
35	High-speed control	1320 / 1504 1320 / 1509	By wire
36	Right-hand fan high speed supply	1509 / 1511	By wire
37	Right-hand fan low speed supply	1504 / 1511	By wire
38	Right-hand fan low speed supply	1512 / 1504	By wire
39	Low speed control High-speed control	1320 / 1508	By wire
40	Left-hand fan low speed or high speed supply	1508 / 1512	By wire
41	Fuel injector control cylinder 4	1320 / 1334	By wire
42	Fuel injector control cylinder 3	1320 / 1333	By wire
43	Fuel injector control cylinder 2	1320 / 1332	By wire
44	Fuel injector control cylinder 1	1320 / 1331	By wire
(*) According to version			

HELP IN DIAGNOSIS : LACK OF POWER - ENGINE DV6C (CONTINENTAL SID 807) BRANCH 2

1 - PRESENTATION : DOCUMENT

This document groups together the main diagnostic information for the vehicle concerned and supplements the diagnostic procedures in the diagnostic equipment.

2 - INSTRUCTIONS

General procedure for using the diagnostic assistance document and the diagnostic tool.

3 - GENERAL

Flow chart : Hdi direct injection system CONTINENTAL SID 807 (engine DV6C).

Operating methods : Hdi direct injection system CONTINENTAL SID 807 (engine DV6C).

4 - SPECIAL OPERATING FEATURES

> **WARNING :** On vehicles with hands-free access and starting, put the "hands-free" remote control in the electronic key reader so that all the operations and diagnostic services of the engine management ECU are functional

5 - PRELIMINARY CHECKS

Check the battery voltage.

Visually check the condition of the battery.

Check the connections of the battery.

6 - PROCEDURE BY FAULT CODES

The fault code tables contain all the fault codes relating the system.

6 - 1 - Table : Fault codes - Engine DV6C (CONTINENTAL SID 807) branch 2

> **WARNING :** A fault code followed by the mention "After-Sales" appears in the case of a problem that is likely to be detected by the customer. These fault codes should be dealt with only if the complaint indicated by the customer corresponds to one of the possible customer complaints associated with the fault code (Refer to the fault codes table to check the faulty component concerned)

Two cases are possible :

- The fault code corresponds to the customer complaint indicated : Deal with fault code

- The fault code does not correspond to the customer complaint indicated : Do not deal with the fault code

> **WARNING :** It is possible for 2 fault codes bearing the same title to be present at the same time : One fault code with the mention "After-Sales" and the other without. These 2 fault codes are recorded from similar strategies. In this case, deal with the fault code that is without the mention "After-Sales"

Fault codes	After sales description of the fault code	Rectificatio priority
P0001	Control of the fuel flow regulator : Open circuit	1
P0002	Control of the fuel flow regulator : Incoherence of the control current of the flow regulation valve	1
P0003	Control of the fuel flow regulator : Short circuit to earth	1
P0004	Control of the fuel flow regulator : Short circuit to positive	1
P0069	Coherence fault : At idle, lack of coherence between the manifold inlet pressure measurement and the atmospheric pressure measurement	3
P0070	Intersystem CAN network : Outside temperature value received via the CAN not valid	1
P0087	Fuel circuit : The pressure measured in the injection rail is less than the setting	1
P0088	Fuel circuit : Pressure measured in the injection rail above the reference	3
P0093	Fuel circuit : Incoherence on the fuel pressure with the flow regulator jammed open	3
P0100	Air flow measure : Quantity of air above the maximum threshold	3
P0115	Engine water temperature measure : Temperature rise test	3
P0117	Engine water temperature measure : Short circuit to earth : Value too high	1
P0118	Engine water temperature measure : Short circuit to positive or open circuit : Value too low	1
P0182	Fuel temperature measure : Short circuit to earth : Value too high	1
P0183	Fuel temperature measure : Short circuit to positive or open circuit : Value too low	1
P0190	Fuel circuit : When stopped, the pressure of the injection rail decreases too slowly	3
P0191	Measurement of the pressure in the fuel injection rail : Voltage variation outside the tolerance	3
P0192	Measurement of the pressure in the fuel injection rail : Short circuit to earth : Pressure too low	1
P0193	Measurement of the pressure in the fuel injection rail : Short circuit to positive : Pressure too high	1
P0201	Injector 1 signal. : Open circuit	1

P0202	Injector 2 signal. : Open circuit	1
P0203	Injector 3 signal. : Open circuit	1
P0204	Injector 4 signal. : Open circuit	1
P0234	Charge pressure regulation : Air pressure above the reference value	2
P0237	Measurement of the manifold inlet pressure : Short circuit to earth : Pressure too low	1
P0238	Measurement of the manifold inlet pressure : Short circuit to positive or open circuit : Pressure too high	1
P0243	Turbocharger control : Open circuit	1
P0245	Turbocharger control : Short circuit to earth	1
P0246	Turbocharger control : Short circuit to positive	1
P0262	Injector 1 signal. : Short circuit between two wires	1
P0263	No. 1 cylinder : Injector resetting outside tolerance	3
P0265	Injector 2 signal. : Short circuit between two wires	1
P0266	No. 2 cylinder : Injector resetting outside tolerance	3
P0268	Injector 3 signal. : Short circuit between two wires	1
P0269	No. 3 cylinder : Injector resetting outside tolerance	3
P0271	Injector 4 signal. : Short circuit between two wires	1
P0272	No. 4 cylinder : Injector resetting outside tolerance	3
P0299	Charge pressure regulation : Air pressure below the reference value	2
P0409	EGR valve : Valve detected jammed closed during the ECU switching to dormant mode phase	2
P0421	Catalytic converter : Detected absent	-
P0489	EGR valve : Position incorrect (too open)	2
P0490	EGR valve : Position incorrect (too closed)	2
P0500	Intersystem CAN network : Speed information incorrect or absent	1
P0516	Battery temperature sensor : Voltage below the minimum threshold	1
P0517	Battery temperature sensor : Voltage higher than the maximum threshold	1
P0562	Battery voltage measurement : System voltage too low	1
P0563	Battery voltage measurement : System voltage too high	1
P0606	Computer : Fault internal to "Watchdog" (CMM)	1
P0625	Alternator : Alternator low voltage fault	1
P0626	Alternator : Alternator high voltage fault	1
P062B	Downloading / Configuration : Downloading of the resetting of the injectors not carried out	1
P062D	Injectors control : Injection bank supply voltage outside tolerance	1
P0658	5V sensors supply n°1 (Air conditioning pressure sensor, Rail pressure sensor, EGR valve position sensor, Variable geometry turbocharger position sensor, Air mixer position sensor, Turbocharging pressure sensor, Particle emission filter differential pressure sensor, EGR exchanger bypass position sensor) : Voltage too low	1

P0659	5V sensor supply no. 1 (Air conditioning pressure sensor ; Rail pressure sensor ; EGR valve position sensor ; Variable geometry turbo position sensor ; Air mixer position sensor ; Supercharging pressure sensor ; Particle filter differential pressure sensor ; EGR exchanger bypass position sensor) : Voltage too high	1
P0667	ECU internal temperature measurement : Voltage variation outside the tolerance	1
P0668	ECU internal temperature measurement : Short circuit to earth	1
P0669	ECU internal temperature measurement : Short circuit to positive	1
P0703	Measurement of the brake pedal position : Incoherence between the two brake sensors detected under acceleration	3
P0704	Measurement of the clutch pedal position : Absence of pedal presses on a great variation of speed	3
P0831	Measurement of the clutch pedal position : No pressing of the pedal while driving for a certain time	3
P0A88	Battery : Voltage of the system below the minimum threshold	1
P0A89	Battery : Voltage of the system above the maximum threshold	1
P1114	Computer : Stopping of the engine by injection cut-off fault	3
P1162	EGR valve : Valve detected as being jammed open during the ECU sleep phase	2
P1166	Fuel circuit : Maximum rail pressure exceeded	3
P1176	Fuel circuit : Pressure measured in the injection rail higher than the reference with the flow regulator stuck (Anti-sticking test)	3
P1192	Computer : Stopping of the engine by high pressure pump supply cut-off fault	3
P1199	Fuel circuit : Incoherence on the reserve fuel pressure (Nearing no fuel)	3
P11AB	Air circuit : Turbocharging pressure below the maximum threshold	3
P1294	Fuel circuit : Critical maximum rail pressure exceeded at certain points	3
P12A1	No. 1 cylinder : Injector injects too much or remains jammed in the open position	3
P12A2	No. 1 cylinder : Injector not injecting enough, or poor cylinder compression	3
P12A4	No. 2 cylinder : Injector injects too much or remains jammed in the open position	3
P12A5	No. 2 cylinder : Injector not injecting enough, or poor cylinder compression	3
P12A7	No. 3 cylinder : Injector injects too much or remains jammed in the open position	3

P12A8	No. 3 cylinder : Injector not injecting enough, or poor cylinder compression	3
P12AA	No. 4 cylinder : Injector injects too much or remains jammed in the open position	3
P12AB	No. 4 cylinder : Injector not injecting enough, or poor cylinder compression	3
P12B3	EGR valve : Position incorrect (Too open) (Service)	4
P12B4	EGR valve : Position incorrect (Too closed) (Service)	4
P1350	Engine preheating : Short circuit to earth on the relay control	1
P1352	Engine preheating : Fault on the pre-heating relay or glow plugs	1
P1412	Particle filter : Engine reconfiguration activated following an electrical fault of the measurement of the differential pressure sensor or of the measurement of the particle emission filter temperature	1
P1459	EGR valve : Blocked pipe detected	-
P1490	Particle filter : Detected overloaded	3
P1497	turbocharger : Position incorrect relative to the setting, not enough turbo (After-sales)	4
P1498	Air mixer : Position incorrect (Too closed) (Service)	4
P1499	Air mixer : Position incorrect (Too open) (Service)	4
P14AA	Air mixer : Failure of the first programming operations	2
P1613	Downloading / Configuration : Downloading fault of the configuration of the ECU	1
P1621	Computer : Software redundancy fault at the injection (Level 2)	1
P1631	Computer : Internal fault (injection with no load)	1
P1641	Computer : Failure of the initialisation of the injector bank, or harness fault	1
P1696	Controlled engine start and stop : Simultaneous starting and stopping request	1
P16A0	engine : Detection of runaway caused by oil ingestion after stalling	3
P2137	Measurement of the accelerator pedal position : Incoherence of the accelerator pedal tracks	3
P2146	Control of injectors : Injection bank 1 : Short circuit	1
P2148	Injectors control : Injection bank 1 : Voltage too high	1
P2175	Air mixer : Position incorrect (too closed)	2
P2227	Measurement of the atmospheric pressure : Voltage variation outside the tolerance	1
P2228	Measurement of the atmospheric pressure : Value too low	1
P2229	Measurement of the atmospheric pressure : Value too high	1
P2265	Water in diesel sensor : Open circuit or short circuit to the plus	1
P2291	Starting monitoring : Pressure increase in the injection rail too slow when starting	3

P2299	Measurement of the accelerator pedal position : Pedal jammed or applied at the same time as the brake pedal	3
P2413	Control of the EGR valve : Overheating or excess current	1
P242F	Particle filter : Detected clogged	3
P2562	turbocharger : Position incorrect relative to requirement, not enough turbo	2
P2670	5V sensor supply no. 2 (Accelerator pedal sensor : not defined) : Voltage too low	1
P2671	5V sensor supply no. 2 (Accelerator pedal sensor : not defined) : Voltage too high	1
P2685	5V sensor supply no. 3 (Engine speed sensor ; Camshaft sensor) : Voltage too low	1
P2686	5V sensor supply no. 3 (Engine speed sensor ; Camshaft sensor) : Voltage too high	1
P3007	Air circuit : Air flow lower than recommended	3
P3008	Air circuit : Air flow higher than recommended	3
P3026	Air circuit : Air flow higher than recommended (Service)	4
P3027	Air circuit : Air flow lower than recommended (Service)	4
U0073	Intersystem CAN network : CAN in error	1
U0121	Intersystem CAN network : Absence of communication with the ABS/ESP ECU	1
U0140	Intersystem CAN network : Absence of communication with the BSI ECU	1
U0315	Intersystem CAN network : Error in length or prohibited value on the ABS/ESP datastream	1
U0322	Intersystem CAN network : Error in length or prohibited value on the BSI datastream	1
U1000	Computer : The engine ECU is detected mute by one of the ECUs on the network	1
U1113	Intersystem CAN network : Absence of communication with the ABS/ESP ECU	1
U1118	Intersystem CAN network : Absence of communication with the BSI ECU	1
U1121	Intersystem CAN network : Absence of communication with the electric power steering ECU	1
U1133	LIN : The reversible alternator is confirmed absent	1
U1138	Intersystem CAN network : Absence of communication with the controlled clutch ECU	1
U1218	Intersystem CAN network : One of the parameters present in a datastream sent by the BSI is invalid	1
U1221	Intersystem CAN network : Prohibited value of the electric power steering datastream	1
U1313	Intersystem CAN network : Error in length or prohibited value on the ABS/ESP datastream	1
U1318	Intersystem CAN network : Error in length or prohibited value on the BSI datastream	1
U1321	Intersystem CAN network : Error of length or prohibited value of the datastream transmitted by the electric	1

	power steering ECU	
U1333	LIN : Error in length or prohibited value of the data from the voltage retention device	1
U1338	Intersystem CAN network : Error of length or prohibited value of the datastream transmitted by the controlled clutch ECU	1
U1400	Alternator LIN network : Registering of a fault on the LIN network	1
U1401	Alternator LIN network : Recording of a fault on the slave node of the Alternator LIN	1

6 - 2 - Table : Fault codes - Automatic gearbox ECU

Deal with the fault codes present in expert mode.

6 - 3 - Table : Fault codes - Controlled manual gearbox ECU

Deal with the fault codes present in expert mode.

7 - PROCEDURE BY SYMPTOMS

The procedure using customer symptoms applies only to cases without fault codes that relate to the given symptom.

The table below lists, by function and by sub-function, the areas/components where this symptom can arise.

Function	Sub function of the system	Suspect areas
Fuel supply system	Fuel system	Fuel
		Fuel filter
		Fuel pipe
		high pressure fuel pump
		Fuel flow regulation valve
		Fuel temperature sensor
		Fuel high pressure common injection rail
		High pressure fuel sensor
		High pressure pipes
		Injectors
Fuel additive circuit	Fuel additive circuit	additive
		Additive pump
		Hoses
	Induction circuit	Air cleaner
		Air inlet line
		Air flow meter
		turbocharger
		Turbo air cooler by-pass unit
		Air mixer
		Turbocharging air pressure sensor
		Exhaust gas recycling valve

Air circuit	exhaust gas recirculation system (BITRON system)	Exhaust gas recirculation exchanger bypass
		Exhaust gas recirculation heat exchanger
		Exhaust gas recirculation line
	Vacuum circuit	vacuum pump
		Pipes
		Control electrovalve for the EGR heat exchanger by-pass
		Turbocharger solenoid valve
	Exhaust and particle filtration circuit	catalytic converter
		Particle filter upstream temperature sensor
		Particle filter
		Particle filter differential pressure sensor
Other constitutive elements	Engine cooling	engine coolant temperature sensor
		Coolant pump
		Coolant circuit
	Pre-post heating system (thermostarter)	Pre-post heater plugs
		Pre-post heating relay
	Lubrication system	oil
		oil pump
		Oil separator
	-	atmospheric pressure sensor
		Engine ECU
		Accelerator pedal position sensor
		Mats
		Earth cables attached to the bodywork
		Setting the valve timing
		Engine compression ratio

8 - CHECK AFTER OPERATION

Put the vehicle under the conditions of appearance as described in the customer complaint, so as to check and confirm that the customer complaint has disappeared.

Methodology :

- Use the information linked to the fault code diagnosed, from the chapter "Table : fault codes"
- Use the information on the conditions of appearance described by the customer to achieve a diagnosis by symptom

INSTRUCTIONS : DIAGNOSTIC ASSISTANCE DOCUMENT

Aid to diagnosis can be used in the following modes :

- "diagnostic mode" as an addition to the diagnostic methods that are available in the diagnostic tool
- "expert mode" as an addition to the functions made available in the diagnostic tool

Once you are familiar with the customer complaint, keep to the sequence of the following stages in the repair diagnosis process.

1 - TAKING ACCOUNT OF THE CUSTOMER COMPLAINT

Be aware of the customer complaint and of the conditions of appearance as described on reception of the vehicle.

Reproduce the customer complaint.

2 - DIAGNOSTIC

When using the diagnostic tool to access diagnosis (including aid to diagnosis and methods) :

- Select : Power unit
- Select : Engine

2 - 1 - Pre-diagnosis

Consult the aid to diagnosis to arrive at the prediagnosis.

Methodology :

- Refer to chapter : Special operating features (*)
- Read the operating principles of the system in this chapter : General
- Carry out the operations described in the chapter : Preliminary checks

(*) The user may perceive certain operating features as malfunctions. The operating features correspond to normal operation and are in conformity with the vehicle specification. The list of operating features may vary depending on the vehicle's trim level.

2 - 2 - Straight to the point

Check whether the customer complaint flagged up can be resolved with the aid of a "straight to the point".

2 - 3 - Procedure by fault codes

The aid to diagnosis lists all the fault codes that relate to the customer complaint.

Consult the chapter : Table of fault codes.

Methodology :

- Consult the information relating to the fault codes
- If there are multiple fault codes, deal with them in the order of priority defined in the aid to diagnosis, indexing the lowest in priority
- Select the method by fault codes from the diagnostic tool

2 - 4 - Procedure by symptoms

> **WARNING :** Apply the procedure by fault codes and then the procedure by symptoms

The aid to diagnosis lists by symptoms all the suspect areas that relate to the customer complaint.

Consult the chapter : Procedure by symptoms.

Methodology :

- Look for the information that relates to the symptom
- Select the method by symptom from the diagnostic tool (in the absence of a fault code or if the method by fault codes is not successful)

2 - 5 - Expert mode

If it is not possible to demonstrate the part that is faulty using a method :

- In the aid to diagnosis, look for the information relating to the customer complaint and linked to the fault codes in the chapter "Method by fault codes" and/or linked to the symptoms in the chapter "Method by symptoms"
- If necessary use the functions made available in the diagnostic tool (Reading of fault codes, Parameter measures and Actuator tests)

3 - REPAIR

Repair the vehicle. (Repair or replacement of the faulty component).

4 - CHECK : AFTER REPAIR

Carry out the operations described in the chapter : Checks after repair.

Put the vehicle under the conditions of appearance as described in the customer complaint, so as to check and confirm that the customer complaint has disappeared.

Methodology :

- Use the information linked to the fault code diagnosed, from the chapter "Table : fault codes"
- Use the information on the conditions of appearance described by the customer to achieve a diagnosis by symptom
- Perform any additional checks as required by the Aid to Diagnosis so as to prevent the

causes from recurring, depending on the origin of the problem or on the repairs done on the vehicle

FLOW CHART : HDI DIRECT INJECTION SYSTEM CONTINENTAL SID 807 (ENGINE DV6C)

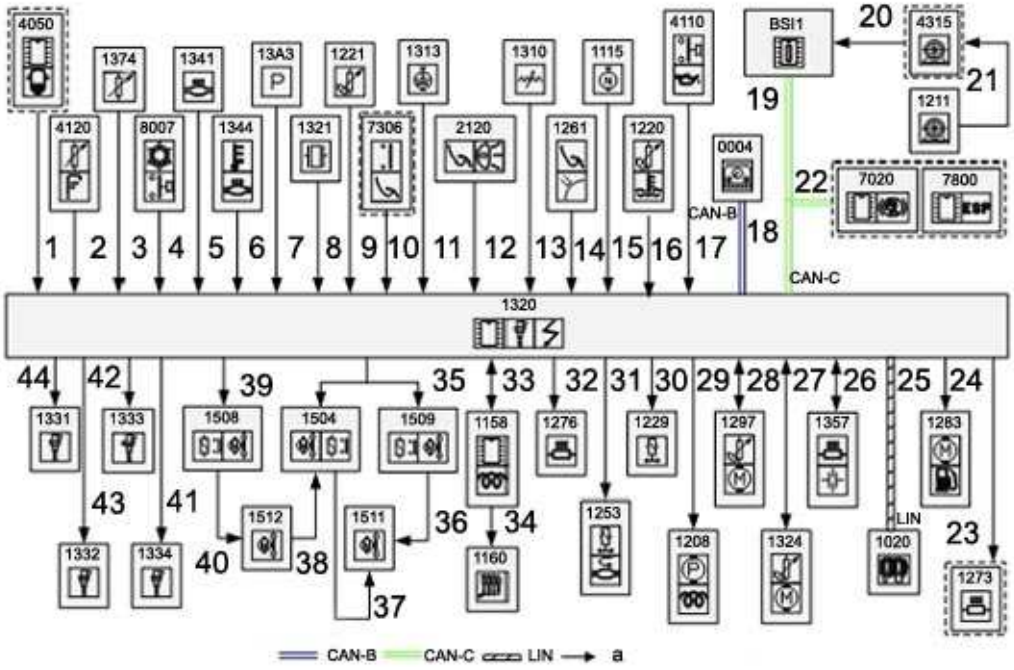

d4ea6rhd

Key : "a" Wire connection.

Components description table	
element	Designation
BSI1	Built-in systems interface
0004	Instrument panel
1020	Alternator
1115	Cylinder reference sensor
1158	Pre-post heating control unit
1160	Pre-heater plugs
1208	diesel injection pump
1211	Fuel gauge pump
1220	Coolant temperature sensor
1221	Diesel fuel thermal sensor
1229	Variable geometry turbocharger pressure regulation solenoid valve
1253	Exhaust gas recirculation (EGR) wired solenoid valve
1261	Accelerator pedal position sensor
1273 (*)	Oil breather re-heat resistor 1
1276	Diesel fuel heater
1283	Fuel additive pump
1297	Electrically-controlled exhaust gas recycling valve
13A3	Inlet air temperature and pressure sensor
1310	Air flowmeter
1313	Engine speed sensor
1320	Engine ECU

1321	Diesel high pressure sensor
1324	Electric mixer with turbocharging air cooler position repeat
1331	Diesel injector - Cylinder No. 1
1332	Diesel injector - Cylinder No. 2
1333	Diesel injector - Cylinder No. 3
1334	Diesel injector - Cylinder No. 4
1341	Particle filter differential pressure sensor
1344	Upstream exhaust gas high temperature sensor
1357	Proportional oxygen sensor
1374	Position repeat sensor for the control diaphragm of the dump valve
1504	Left-hand and right-hand fans serial supply relay
1508	Cooling fan slow speed supply relay
1509	Cooling fan fast speed supply relay
1511	Right-hand fan
1512	Left-hand fan
2120	Brake twin function switch
4050 (*)	Water in fuel sensor
4110	Engine oil pressure switch
4120	Engine oil level sensor
4315 (*)	Fuel gauge
7020 (*)	ABS ECU
7306 (*)	Cruise control safety switch (clutch)
7800 (*)	ESP ECU
8007	Air conditioning pressure switch
(*) According to version	

Description of the exchanges of information			
Connection number	signal	Transmitter / Receiver	Nature of signal
1 (*)	Information on presence of water in the diesel fuel	4050 / 1320	By wire
2	Engine oil level information	4120 / 1320	By wire
3	Dump valve position repeat information	1374 / 1320	By wire
4	Refrigerant pressure information	8007 / 1320	By wire
5	Particle emission filter clogging level information	1341 / 1320	By wire
6	Exhaust gas temperature information	1344 / 1320	By wire
7	Engine intake inlet air temperature information	13A3 / 1320	By wire
	Engine intake inlet air pressure information		
8	Information on the diesel fuel high pressure (Fuel high pressure common injection rail)	1321 / 1320	By wire
9	Diesel fuel temperature information	1221 / 1320	By wire
10 (*)	Clutch pedal pressed information	7306 / 1320	By wire
11	Engine speed and position information	1313 / 1320	By wire
12	Information on depressing the brake pedal	2120 / 1320	By wire
13	Air flow admitted by the engine information	1310 / 1320	By wire
	Inlet air temperature before turbocharger information		
14	Accelerator pedal position information	1261 / 1320	By wire
15	Camshaft position information	1115 / 1320	By wire

16	Engine coolant temperature information	1220 / 1320	By wire
17	Engine oil pressure low information	4110 / 1320	By wire
18	Fault indicator lights on	BSI1 / 0004	CAN-B
	Engine management ECU fault information		
	Particle emission filter clogging level information		
19	Cruise control or speed limiter reference values	BSI1 / 1320	CAN-C
	Quantity of fuel added information		
	Particle emission filter clogging risk information	1320 / BSI1	
	Minimum additive level reached information		
	Engine running information		
	Engine management ECU fault information		
	Request for activation of the heated rear screen to assist with regeneration of the particle emission filter		
20 (*)	Fuel gauge signals from the pump gauge module and from the secondary fuel gauge	4315 / BSI1	By wire
21 (*)	Fuel gauge signal from the pump gauge module	1211 / (4315 - BSI1)	By wire
22 (*)	Vehicle speed information	(7020 - 7800) / 1320	CAN-C
		(7020 - 7800) / BSI1	
23 (*)	Control of the heater element for the oil vapours resuction 1	1320 / 1273	By wire
24	Control of the fuel additive pump	1320 / 1283	By wire
25	Control of the alternator	1320 / 1020	LIN
	Alternator type information	1020 / 1320	
	Alternator faults information		
26	Proportional oxygen sensor heating control	1320 / 1357	By wire
	Information on mixture coming from the oxygen sensor	1357 / 1320	By wire
27	Turbocharging air cooler electric mixer control	1320 / 1324	Open cycle ratio
	Turbocharging air cooler electric mixer position information	1324 / 1320	By wire
28	Electrical control of the EGR electrovalve	1320 / 1297	Open cycle ratio
	Electric EGR solenoid valve position information	1297 / 1320	By wire
	EGR exchanger by-pass position information		
29	Control of the fuel flow regulator	1320 / 1208	Open cycle ratio
30	Control of the turbocharger pressure regulation electrovalve	1320 / 1229	Open cycle ratio
31	Exhaust gas recirculation wired solenoid valve control	1320 / 1253	Open cycle ratio
32	Control of the diesel fuel heater	1320 / 1276	By wire
33	Pre-post heating relay control	1320 / 1158	By wire
	Pre-post heat unit diagnostics information	1158 / 1320	By wire

34	Control of pre-heater plugs	1158 / 1160	By wire
35	High-speed control	1320 / 1504 1320 / 1509	By wire
36	Right-hand fan high speed supply	1509 / 1511	By wire
37	Right-hand fan low speed supply	1504 / 1511	By wire
38	Right-hand fan low speed supply	1512 / 1504	By wire
39	Low speed control High-speed control	1320 / 1508	By wire
40	Left-hand fan low speed or high speed supply	1508 / 1512	By wire
41	Fuel injector control cylinder 4	1320 / 1334	By wire
42	Fuel injector control cylinder 3	1320 / 1333	By wire
43	Fuel injector control cylinder 2	1320 / 1332	By wire
44	Fuel injector control cylinder 1	1320 / 1331	By wire
(*) According to version			

INFORMATION : FAULT CODE P0001 (ENGINE ECU)

SPECIAL FEATURE :

FOR : 1CB7 - B0FBM : DV6C TURBO DIESEL

FOR : 1CX7 - B0FBM : DV6C TURBO DIESEL

FOR : 1C58 - B0FBM : DV6C TURBO DIESEL

FOR : 1PT7 - B0FBM : DV6C TURBO DIESEL

FOR : 1PW2 - B0FBM : DV6C TURBO DIESEL

FOR : 1CB8 - B0FBM : DV6C TURBO DIESEL

FOR : 1CXA - B0FBM : DV6C TURBO DIESEL

FOR : 1CYA - B0FBM : DV6C TURBO DIESEL

FOR : 1PTB - B0FBM : DV6C TURBO DIESEL

FOR : 1PTC - B0FBM : DV6C TURBO DIESEL

FOR : 1PIA - B0FBM : DV6C TURBO DIESEL

FOR : 1CMJ - B0FBM : DV6C TURBO DIESEL

FOR : 1PMJ - B0FBM : DV6C TURBO DIESEL

Engine ECU CONTINENTAL SID 807 branch 2	
Fault code	P0001
After sales description of the fault code	Control of the fuel flow regulator : Open circuit
Description of the diagnostics	Electrical fault detected for 400 ms
Conditions of activation of the diagnostics	At least one of the following conditions must be fulfilled - Ignition on - Engine running
Conditions of disappearance of the fault	At least one of the following conditions must be fulfilled - Ignition on - Engine running
	Closing of the EGR (exhaust gas recycling) valve

Down-grade modes if fault present	Irreversible deactivation of the vehicle speed limiter
	Irreversible deactivation of the vehicle cruise control
	Deactivation of taking account of the tight spot information
	Switching of the turbocharging pressure regulation to controlled mode
	Deactivation of the request for regeneration of the particle filter from the diagnostic tool
	Sending of the information "torque uncertain" on the CAN network
Switching on of the warning lamp and/or warning message	Warning lamp MIL
Main customer complaints likely	Cutting of the vehicle speed limiter
	Cutting of cruise control
	Noise
	Smoke from the exhaust
	Engine acceleration at wrong time
	Starting problem
	Jerking/stalling
	Lack of power
	Problem with automatic restarting of the internal combustion engine (If the vehicle has the Stop and Start system)
Suspect areas	Fuel high pressure flow regulator
	Fuses
	Electrical harnesses
	Connectors

Fault code(s): P0001 or P0002 or P0003 or P0004

Remember DTC

Be sure you have selected on the FLOW CHART phase

DTC on	Alternative text of the DTC	Active	Conditions for fault finding	Counter-symptom to the DTC encountered	Active	Suspected areas. Major control stages	The client effective symptom(s) encountered with the DTC(s)	Fault mode(s) to be dealt with before carrying out the steps in this flow chart	Tools required
P0001	Control of the fuel flow regulator: Open circuit	X							
P0002	Control of the fuel flow regulator: Inconsistency of the control current for the fuel flow regulator valve	X							
P0003	Control of the fuel flow regulator: Short circuit to ground	X							
P0004	Control of the fuel flow regulator: Short circuit to positive	X							

PRE-CHECK

FLOW CHART Test procedure

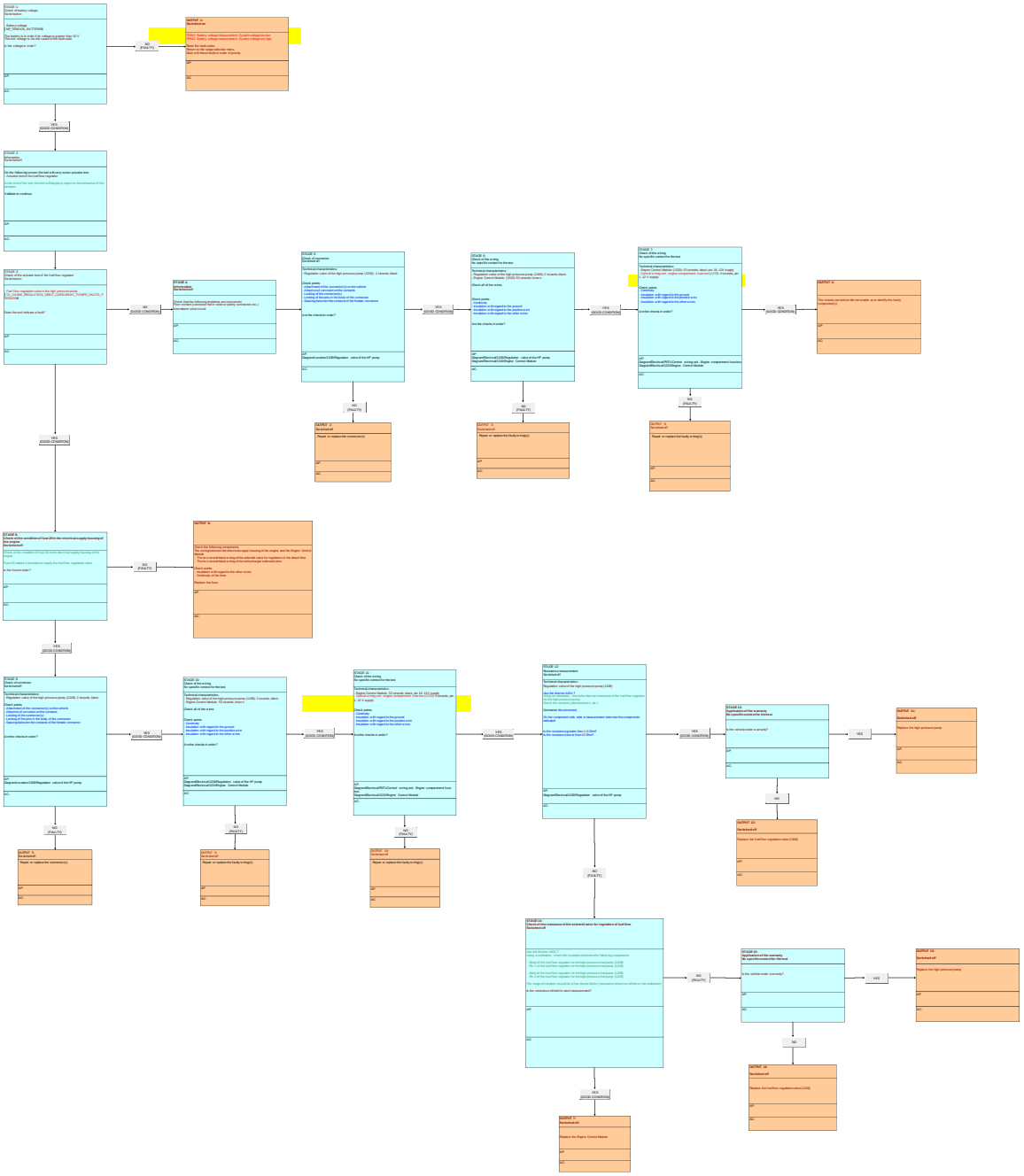

INFORMATION : FAULT CODE P0002 (ENGINE MANAGEMENT ECU)

SPECIAL FEATURE :

FOR : 1CB7 - B0FBM : DV6C TURBO DIESEL

FOR : 1CX7 - B0FBM : DV6C TURBO DIESEL

FOR : 1C58 - B0FBM : DV6C TURBO DIESEL

FOR : 1PT7 - B0FBM : DV6C TURBO DIESEL

FOR : 1PW2 - B0FBM : DV6C TURBO DIESEL

FOR : 1CB8 - B0FBM : DV6C TURBO DIESEL

FOR : 1CXA - B0FBM : DV6C TURBO DIESEL

FOR : 1CYA - B0FBM : DV6C TURBO DIESEL

FOR : 1PTB - B0FBM : DV6C TURBO DIESEL

FOR : 1PTC - B0FBM : DV6C TURBO DIESEL

FOR : 1PIA - B0FBM : DV6C TURBO DIESEL

FOR : 1CMJ - B0FBM : DV6C TURBO DIESEL

FOR : 1PMJ - B0FBM : DV6C TURBO DIESEL

Engine ECU CONTINENTAL SID 807 branch 2	
Fault code	P0002
After sales description of the fault code	Control of the fuel flow regulator : Incoherence of the control current of the flow regulation valve
Description of the diagnostics	Difference in the opening of the flow regulation valve in relation to the reference value detected by a control current measurement higher than 3,5 amps for 2 seconds. 100 % overrun for 2 secs of the cyclical opening ratio signal
Conditions of activation of the diagnostics	Engine running
Conditions of disappearance of the fault	Driving with hot engine for 5 minutes with several stabilised full-load periods for 20 secs
Down-grade modes if fault present	Switching to fuel "normal reduced flow" mode
Switching on of the	Warning lamp MIL

warning lamp and/or warning message	"SERVICE" warning lamp
Main customer complaints likely	Jerking/stalling
	Lack of power
	Starting problem
	Slightly higher fuel consumption
	Fluid leak/smells (diesel fuel, oil, etc.)
	Noise
	Engine acceleration at wrong time
	Smoke from the exhaust
	Absence of automatic stopping of the internal combustion engine (If the vehicle has the Stop and Start system)
Suspect areas	Poor quality of the fuel or type of fuel
	Air leak on the fuel filter
	Clogging of the fuel filter
	Leak in fuel circuit (low pressure)
	Fuel high pressure flow regulator
	high pressure fuel pump
	Pressure sensor on the fuel high-pressure injection rail
	Leak on the high pressure fuel pipes
	Leak on the fuel high pressure common injection rail
	Fuel injectors
	Electrical harnesses
	Connectors

Fault code(s): P0001 or P0002 or P0003 or P0004

Remember DTC

Be sure you have identified the FLOW CHART phase

DTC set	Alternative text of the DTC	Type of fault	Conditions for fault finding	Causing/action into the DTC is ascertained	Type of fault	Suspected areas. Major control steps	The client effective complaint(s) encountered with the DTC(s)	Fault mode(s) to be dealt with before carrying out the steps in this flow chart	Tools required
P0001	Control of the fuel flow regulator: Open circuit	A			A				
P0002	Control of the fuel flow regulator: Inconsistency of the control current for the fuel flow regulator valve	A			A				
P0003	Control of the fuel flow regulator: Short circuit to ground	A			A				
P0004	Control of the fuel flow regulator: Short circuit to positive	A			A				

PRE-CHECK

FLOW CHART Test procedure

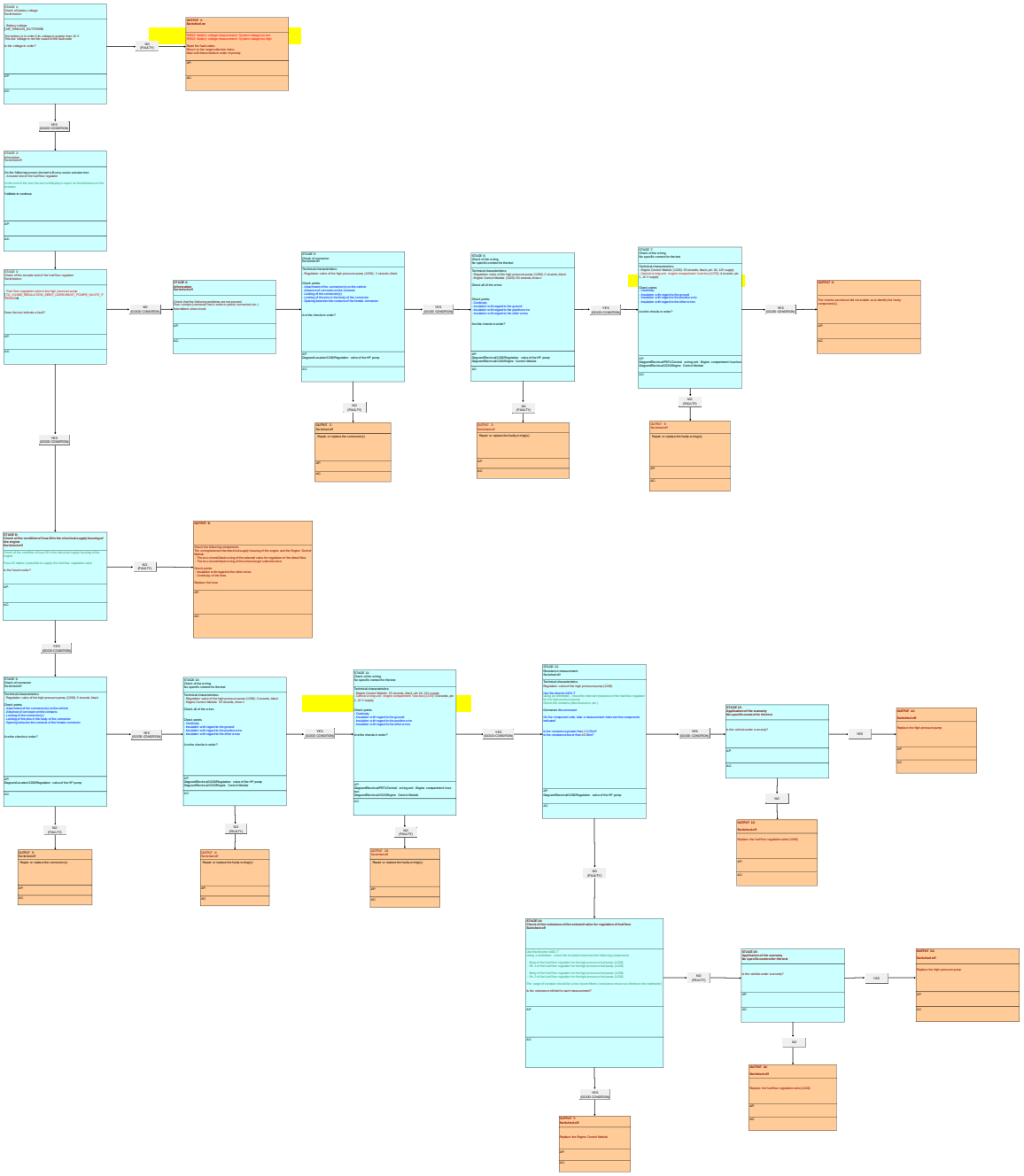

INFORMATION : FAULT CODE P0003 (ENGINE MANAGEMENT ECU)

SPECIAL FEATURE :

FOR : 1CB7 - B0FBM : DV6C TURBO DIESEL

FOR : 1CX7 - B0FBM : DV6C TURBO DIESEL

FOR : 1C58 - B0FBM : DV6C TURBO DIESEL

FOR : 1PT7 - B0FBM : DV6C TURBO DIESEL

FOR : 1PW2 - B0FBM : DV6C TURBO DIESEL

FOR : 1CB8 - B0FBM : DV6C TURBO DIESEL

FOR : 1CXA - B0FBM : DV6C TURBO DIESEL

FOR : 1CYA - B0FBM : DV6C TURBO DIESEL

FOR : 1PTB - B0FBM : DV6C TURBO DIESEL

FOR : 1PTC - B0FBM : DV6C TURBO DIESEL

FOR : 1PIA - B0FBM : DV6C TURBO DIESEL

FOR : 1CMJ - B0FBM : DV6C TURBO DIESEL

FOR : 1PMJ - B0FBM : DV6C TURBO DIESEL

Engine ECU CONTINENTAL SID 807 branch 2	
Fault code	P0003
After sales description of the fault code	Control of the fuel flow regulator : Short circuit to earth
Description of the diagnostics	Electrical fault detected for 400 ms
Conditions of activation of the diagnostics	At least one of the following conditions must be fulfilled - Ignition switched on - Engine running
Conditions of disappearance of the fault	At least one of the following conditions must be fulfilled - Ignition switched on - Engine running
	Closing of the EGR (exhaust gas recycling) valve

Down-grade modes if fault present	Irreversible deactivation of the vehicle speed limiter
	Irreversible deactivation of the vehicle cruise control
	Deactivation of taking account of the tight spot information
	Switching of the turbocharging pressure regulation to controlled mode
	Switching to fuel "normal reduced flow" mode
	Deactivation of the request for regeneration of the particle filter from the diagnostic tool
	Sending of the information "torque uncertain" on the CAN network
Switching on of the warning lamp and/or warning message	Warning lamp MIL
	"SERVICE" warning lamp
Main customer complaints likely	Jerking/stalling
	Lack of power
	Starting problem
Suspect areas	Fuel high pressure flow regulator
	Electrical harnesses
	Connectors

Fault code(s): P0001 or P0002 or P0003 or P0004

Remember DTC

Be sure you have identified the FLOW CHART phase

DTC no.	Alternative text of the DTC	Type of fault	Conditions for fault finding	Counting method in order to be ascertained	Type of fault finding	Suspected areas. Major control steps	The client effective complaint(s) encountered with the DTC(s)	Fault mode(s) to be dealt with before carrying out the step(s) this line refers	Tools required
P0001	Control of the fuel flow regulator: Open circuit	A			A				
P0002	Control of the fuel flow regulator: Inconsistency of the control current for the fuel flow regulator valve	A			A				
P0003	Control of the fuel flow regulator: Short circuit to ground	A			A/B/E				
P0004	Control of the fuel flow regulator: Short circuit to positive	A			A				

PRE-CHECK

FLOW CHART Test procedure

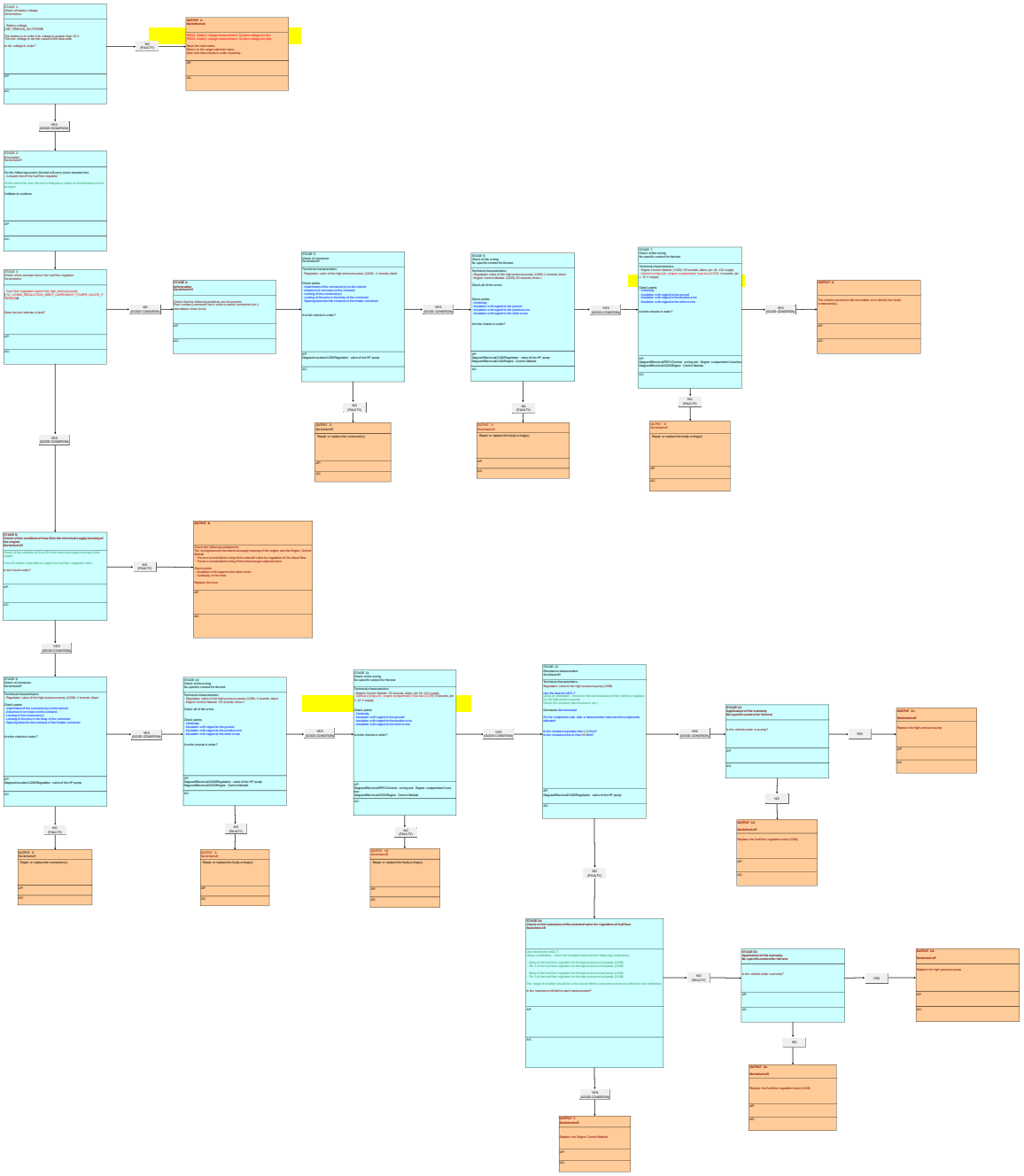

INFORMATION : FAULT CODE P0004 (ENGINE MANAGEMENT ECU)

SPECIAL FEATURE :

FOR : 1CB7 - B0FBM : DV6C TURBO DIESEL

FOR : 1CX7 - B0FBM : DV6C TURBO DIESEL

FOR : 1C58 - B0FBM : DV6C TURBO DIESEL

FOR : 1PT7 - B0FBM : DV6C TURBO DIESEL

FOR : 1PW2 - B0FBM : DV6C TURBO DIESEL

FOR : 1CB8 - B0FBM : DV6C TURBO DIESEL

FOR : 1CXA - B0FBM : DV6C TURBO DIESEL

FOR : 1CYA - B0FBM : DV6C TURBO DIESEL

FOR : 1PTB - B0FBM : DV6C TURBO DIESEL

FOR : 1PTC - B0FBM : DV6C TURBO DIESEL

FOR : 1PIA - B0FBM : DV6C TURBO DIESEL

FOR : 1CMJ - B0FBM : DV6C TURBO DIESEL

FOR : 1PMJ - B0FBM : DV6C TURBO DIESEL

Engine ECU CONTINENTAL SID 807 branch 2	
Fault code	P0004
After sales description of the fault code	Control of the fuel flow regulator : Short circuit to positive
Description of the diagnostics	Electrical fault detected for 400 ms
Conditions of activation of the diagnostics	At least one of the following conditions must be fulfilled - Ignition switched on - Engine running
Conditions of disappearance of the fault	At least one of the following conditions must be fulfilled - Ignition switched on - Engine running
	Closing of the EGR (exhaust gas recycling) valve

Down-grade modes if fault present	Irreversible deactivation of the vehicle speed limiter
	Irreversible deactivation of the vehicle cruise control
	Deactivation of taking account of the tight spot information
	Switching of the turbocharging pressure regulation to controlled mode
	Deactivation of the request for regeneration of the particle filter from the diagnostic tool
	Sending of the information "torque uncertain" on the CAN network
Switching on of the warning lamp and/or warning message	Warning lamp MIL
Main customer complaints likely	Jerking/stalling
	Smoke from the exhaust
	Lack of power
	Starting problem
Suspect areas	Fuel high pressure flow regulator
	Electrical harnesses
	Connectors

Fault code(s): P0001 or P0002 or P0003 or P0004

Remember DTC

Be sure you have identified the FLOW CHART phase

DTC set	Alternative text of the DTC	Type of fault	Conditions for fault finding	Causing/activation conditions for DTC ascertained	Type of fault	Suspected areas. Major control steps	The client effective complaint(s) encountered with the DTC(s)	Fault code(s) to be dealt with before carrying out/starting this flow chart	Tools required
P0001	Control of the fuel flow regulator: Open circuit	A			A				
P0002	Control of the fuel flow regulator: Inconsistency of the control current for the fuel flow regulator valve	A			A				
P0003	Control of the fuel flow regulator: Short circuit to ground	A			A				
P0004	Control of the fuel flow regulator: Short circuit to positive	A			A				

PRE-CHECK

FLOW CHART Test procedure

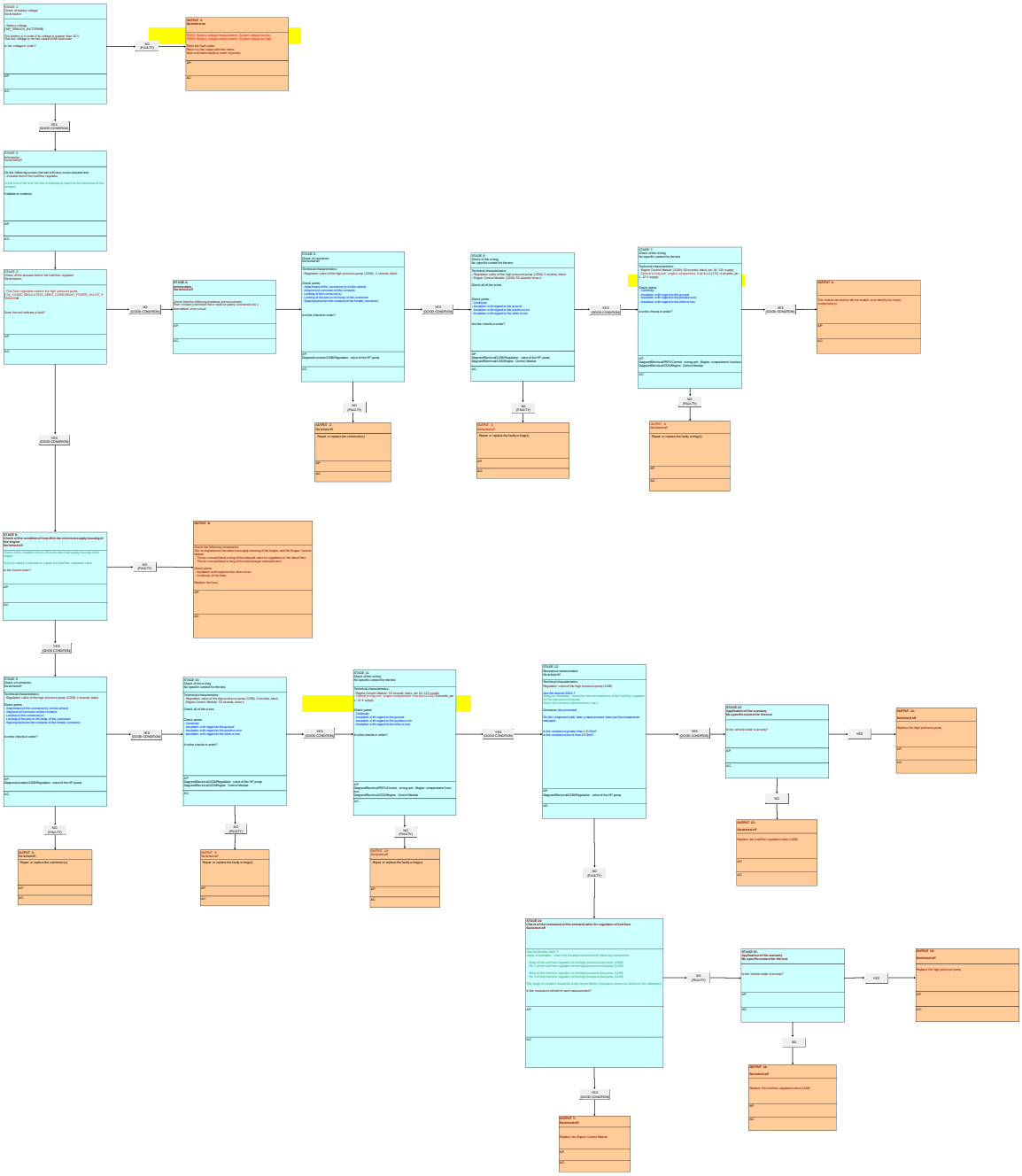

INFORMATION : FAULT CODE P0016 (ENGINE MANAGEMENT ECU)

SPECIAL FEATURE :

FOR : 1CB7 - B0FBM : DV6C TURBO DIESEL

FOR : 1CX7 - B0FBM : DV6C TURBO DIESEL

FOR : 1C58 - B0FBM : DV6C TURBO DIESEL

FOR : 1PT7 - B0FBM : DV6C TURBO DIESEL

FOR : 1PW2 - B0FBM : DV6C TURBO DIESEL

FOR : 1CB8 - B0FBM : DV6C TURBO DIESEL

FOR : 1CXA - B0FBM : DV6C TURBO DIESEL

FOR : 1CYA - B0FBM : DV6C TURBO DIESEL

FOR : 1PTB - B0FBM : DV6C TURBO DIESEL

FOR : 1PTC - B0FBM : DV6C TURBO DIESEL

FOR : 1PIA - B0FBM : DV6C TURBO DIESEL

FOR : 1CMJ - B0FBM : DV6C TURBO DIESEL

FOR : 1PMJ - B0FBM : DV6C TURBO DIESEL

Engine ECU CONTINENTAL SID 807 branch 2	
Fault code	P0016
After sales description of the fault code	Synchronisation : Incoherence between the information from the engine speed sensor and the camshaft sensor
Description of the diagnostics	Loss of synchronisation between the camshaft sensor and the engine speed sensor
Conditions of activation of the diagnostics	Under starter
Conditions of disappearance of the fault	10 successive starts
Down-grade modes if fault present	Irreversible deactivation of the vehicle speed curbing function
	Reversible deactivation of the vehicle cruise control
	Reversible deactivation of the vehicle speed limiter
	Sending of the information "torque uncertain" on the CAN network

	For a gearbox with engine speed regulation (automatic gearbox or piloted manual gearbox), limitation of the torque sent to the gearbox
Switching on of the warning lamp and/or warning message	-
Main customer complaints likely	Starting problem
	Absence of automatic stopping of the internal combustion engine (If the vehicle has the Stop and Start system)
Suspect areas	Camshaft position sensor
	Camshaft pulley
	Engine speed sensor
	Engine speed sensor target
	Timing belt
	Electrical harnesses
	Connectors

Fault code(s): P0016 or P0017

Reminder DTC

Do not erase the DTCs except for the FLOW CHART phase								
DTC no.	Alternate text of the DTC	Fault type	Conditions for fault finding	Downgraded mode after a fault is ascertained	Warning lamp	Suspected areas Major control steps	The client «the»@@speaker@@ associated with the DTCs	Fault code(s) to be dealt with before working through this flow chart	Tools required
P0016	Synchronisation inconsistency between the information from the crankshaft sensor and from the camshaft sensor	00							
P0017	Monitoring of start-up: Synchronisation time too long	00							
					DNOC				

PRE-CHECK
FLOW CHART Test procedure

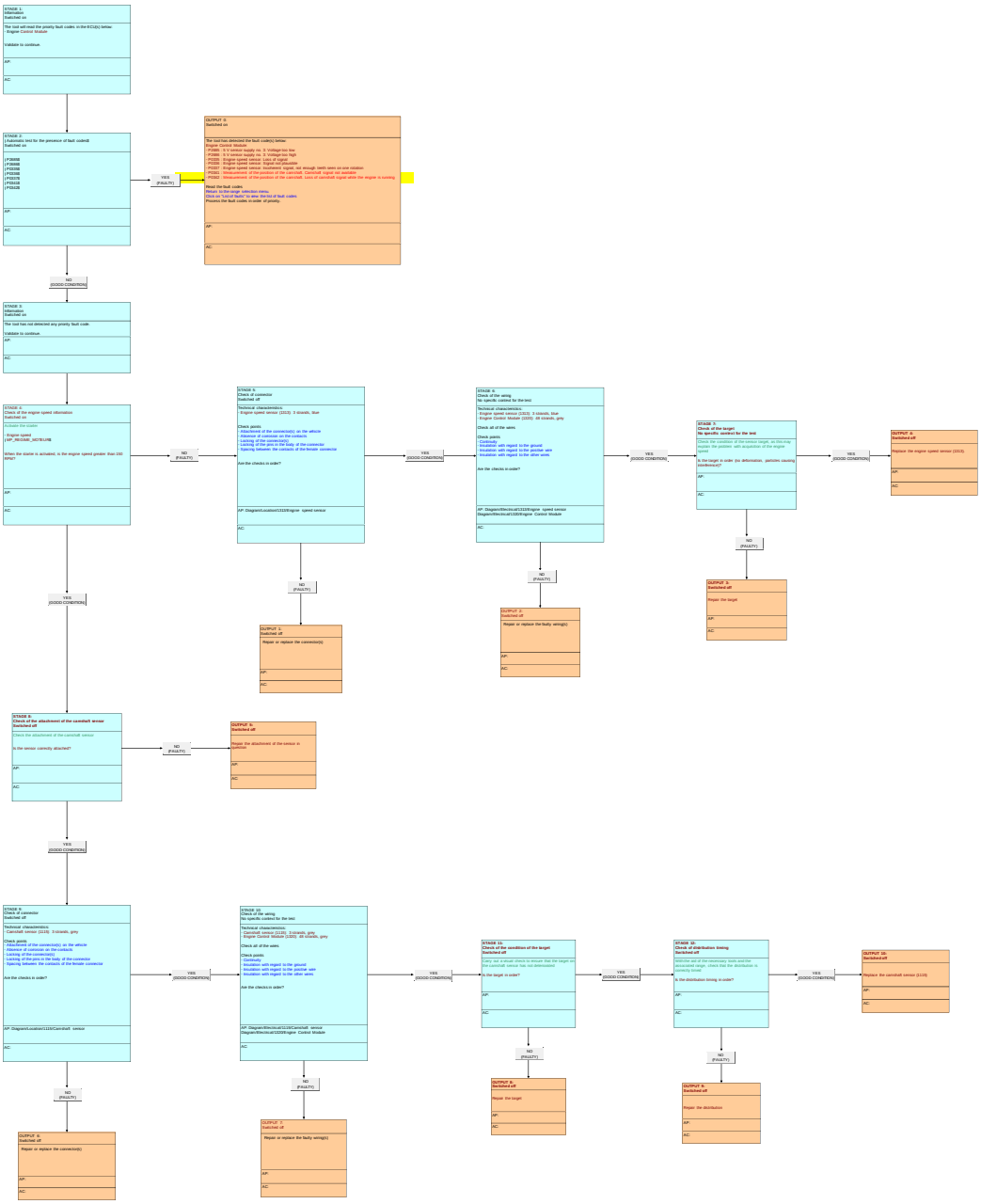

INFORMATION : FAULT CODE P0017 (ENGINE MANAGEMENT ECU)

SPECIAL FEATURE :

FOR : 1CB7 - B0FBM : DV6C TURBO DIESEL

FOR : 1CX7 - B0FBM : DV6C TURBO DIESEL

FOR : 1C58 - B0FBM : DV6C TURBO DIESEL

FOR : 1PT7 - B0FBM : DV6C TURBO DIESEL

FOR : 1PW2 - B0FBM : DV6C TURBO DIESEL

FOR : 1CB8 - B0FBM : DV6C TURBO DIESEL

FOR : 1CXA - B0FBM : DV6C TURBO DIESEL

FOR : 1CYA - B0FBM : DV6C TURBO DIESEL

FOR : 1PTB - B0FBM : DV6C TURBO DIESEL

FOR : 1PTC - B0FBM : DV6C TURBO DIESEL

FOR : 1PIA - B0FBM : DV6C TURBO DIESEL

FOR : 1CMJ - B0FBM : DV6C TURBO DIESEL

FOR : 1PMJ - B0FBM : DV6C TURBO DIESEL

Engine ECU CONTINENTAL SID 807 branch 2	
Fault code	P0017
After sales description of the fault code	Starting monitoring : Synchronisation time too long
Description of the diagnostics	Synchronisation time of more than 0,8 s between the camshaft sensor and the engine speed sensor (Coolant temperature of 5°C) (Thresholds weighted according to the engine coolant temperature)
Conditions of activation of the diagnostics	Under starter
Conditions of disappearance of the fault	Under starter
Down-grade modes if fault present	-
Switching on of the warning lamp	-

and/or warning message	
Main customer complaints likely	Incorrect displaying of the oil level
	Starting problem
	Absence of automatic stopping of the internal combustion engine (If the vehicle has the Stop and Start system)
Suspect areas	Camshaft position sensor
	Camshaft pulley
	Engine speed sensor
	Engine speed sensor target
	Timing belt
	Electrical harnesses
	Connectors

Fault code(s): P0016 or P0017

Reminder DTC

Do not sti...	Alternate text of the DTC	Fault type	Conditions for fault finding	Downgraded mode after a fault is ascertained	Illuminated warning light	Suspected areas Major control steps	The client effects[Symptom(s) associated with the DTC]	Fault code(s) to be dealt with before working through this flow chart	Tools required
P0016	Synchronisation inconsistency between the information from the crankshaft sensor and from the camshaft sensor	SG							
P0017	Monitoring of start-up: Synchronisation time too long	FD							
					STOP				

PRE-CHECK

FLOW CHART Test procedure

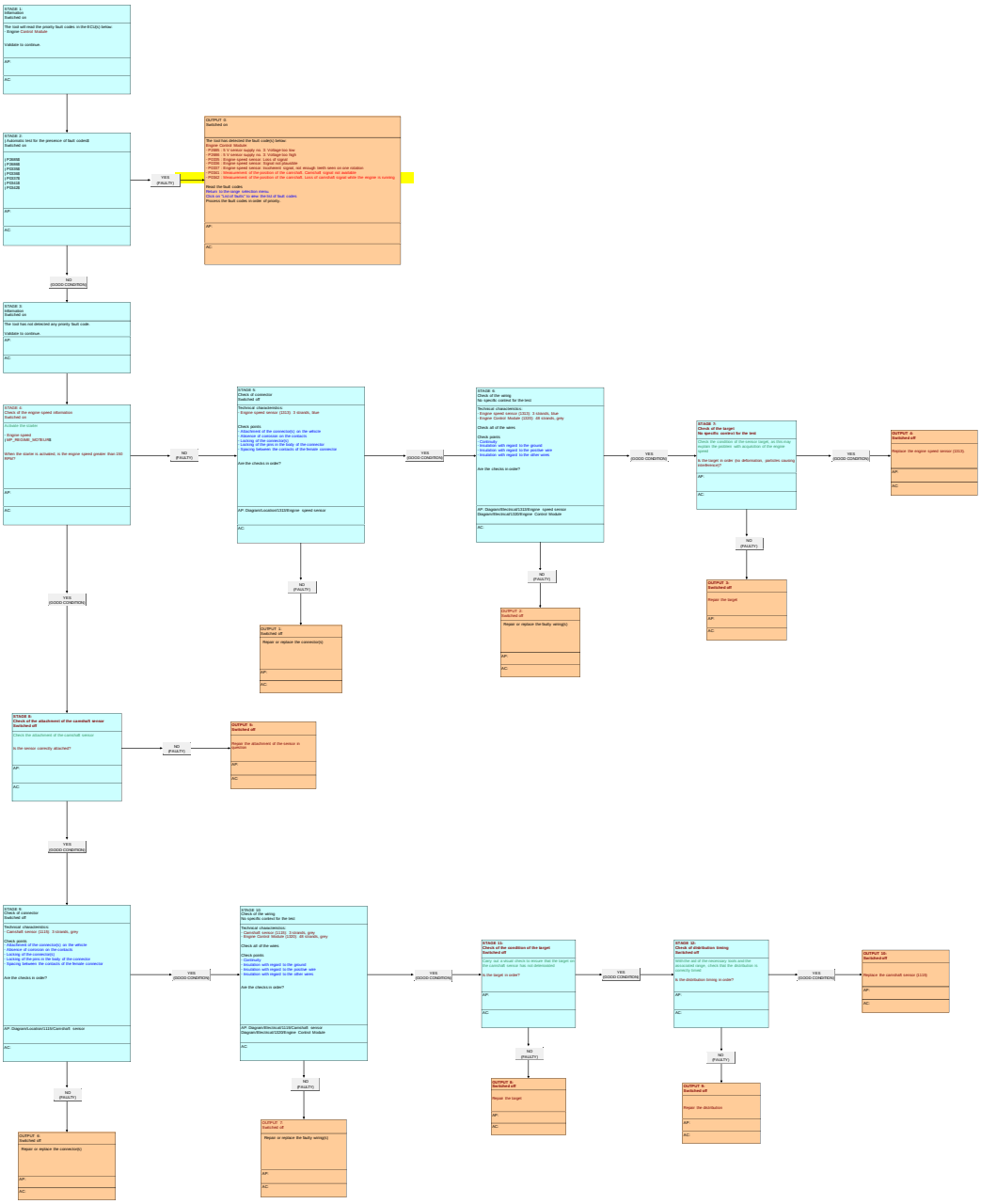

INFORMATION : FAULT CODE P0030 (ENGINE MANAGEMENT ECU)

SPECIAL FEATURE :

FOR : 1CB7 - B0FBM : DV6C TURBO DIESEL

FOR : 1CB8 - B0FBM : DV6C TURBO DIESEL

FOR : 1CXA - B0FBM : DV6C TURBO DIESEL

FOR : 1CX7 - B0FBM : DV6C TURBO DIESEL

FOR : 1CYA - B0FBM : DV6C TURBO DIESEL

FOR : 1C58 - B0FBM : DV6C TURBO DIESEL

FOR : 1PTB - B0FBM : DV6C TURBO DIESEL

FOR : 1PTC - B0FBM : DV6C TURBO DIESEL

FOR : 1PT7 - B0FBM : DV6C TURBO DIESEL

FOR : 1PW2 - B0FBM : DV6C TURBO DIESEL

FOR : 1PIA - B0FBM : DV6C TURBO DIESEL

FOR : 1CMJ - B0FBM : DV6C TURBO DIESEL

FOR : 1PMJ - B0FBM : DV6C TURBO DIESEL

Engine ECU CONTINENTAL SID 807 branch 2	
Fault code	P0030
After sales description of the fault code	Oxygen sensor heating : Open circuit
Description of the diagnostics	Electrical fault detected for 2 s
Conditions of activation of the diagnostics	Ignition switched on
Conditions of disappearance of the fault	Driving for 5 minutes
Down-grade modes if fault present	-
Switching on of the warning lamp and/or warning message	-

Main customer complaints likely	Slightly higher fuel consumption
Suspect areas	Oxygen sensor
	Electrical harness
	Fuse
	Connectors

Fault code(s): P0030 or P0031 or P0032 or P0053 or P0135

Reminder DTC

DTC no.	Alternative text of the DTC	Fault type	Conditions for fault finding	Downgraded mode after a fault is memorised	Driving safety	Suspected areas Major control steps	The client offers(highlights) associated with the DTCs	Fault code(s) to be dealt with before working through this flow chart	Tools required
P0030	Upstream oxygen sensor heating: Open circuit or overcurrent	4/1							
P0031	Upstream oxygen sensor heating: Short circuit to ground	3/1							
P0032	Upstream oxygen sensor heating: Short circuit to positive	3/2							
P0053	Upstream oxygen sensor heating: Resistance of the oxygen sensor heating circuit outside tolerance, old sensor	8/4							
P0135	Upstream oxygen sensor: Estimated temperature too high or too low, sensor heating no longer functions	8/4							

PRE-CHECK

FLOW CHART Test procedure

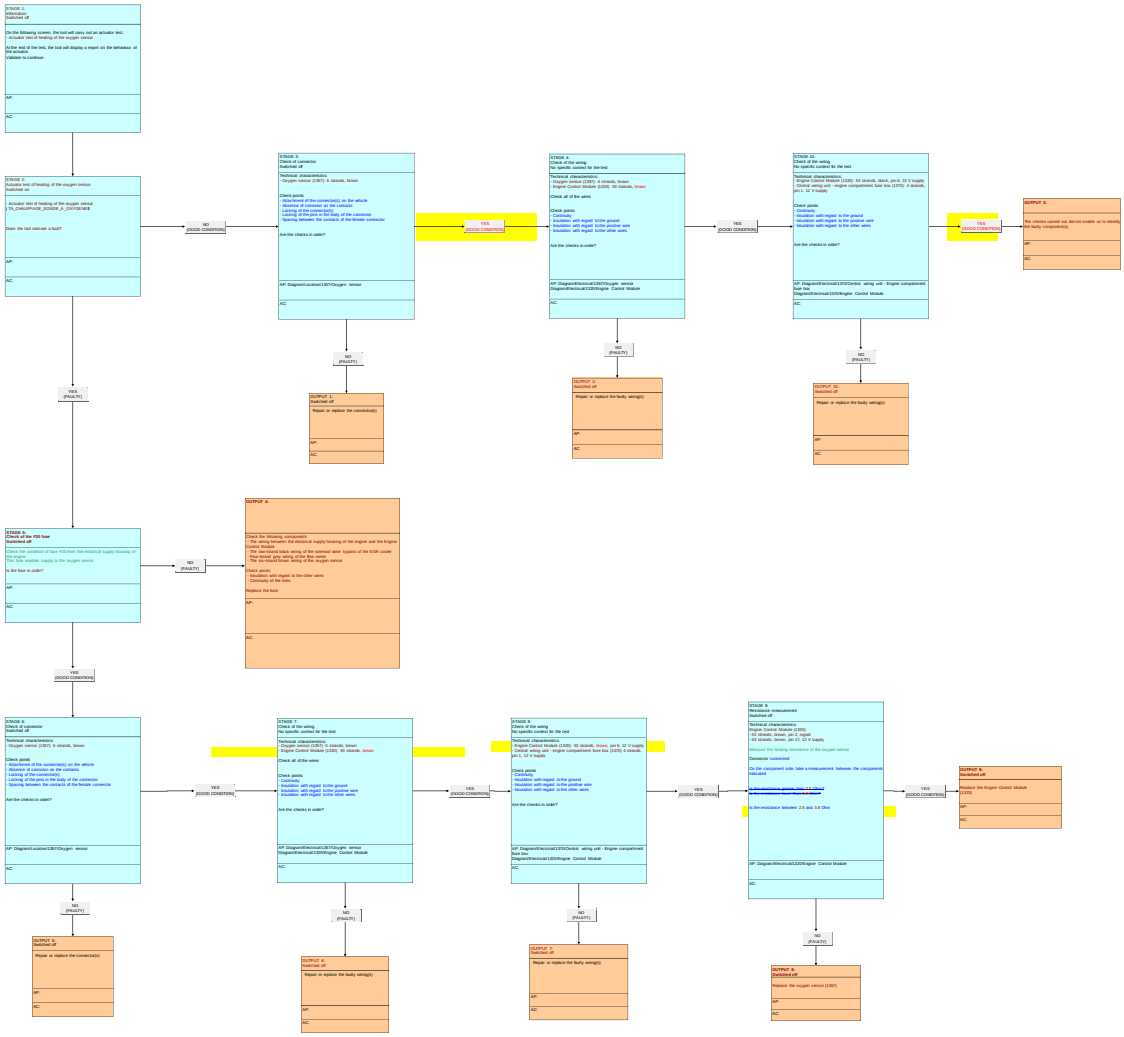

INFORMATION : FAULT CODE P0031 (ENGINE MANAGEMENT ECU)

SPECIAL FEATURE :

FOR : 1CB7 - B0FBM : DV6C TURBO DIESEL

FOR : 1CB8 - B0FBM : DV6C TURBO DIESEL

FOR : 1CXA - B0FBM : DV6C TURBO DIESEL

FOR : 1CX7 - B0FBM : DV6C TURBO DIESEL

FOR : 1CYA - B0FBM : DV6C TURBO DIESEL

FOR : 1C58 - B0FBM : DV6C TURBO DIESEL

FOR : 1PIA - B0FBM : DV6C TURBO DIESEL

FOR : 1PTB - B0FBM : DV6C TURBO DIESEL

FOR : 1PTC - B0FBM : DV6C TURBO DIESEL

FOR : 1PT7 - B0FBM : DV6C TURBO DIESEL

FOR : 1PW2 - B0FBM : DV6C TURBO DIESEL

FOR : 1CMJ - B0FBM : DV6C TURBO DIESEL

FOR : 1PMJ - B0FBM : DV6C TURBO DIESEL

Engine ECU CONTINENTAL SID 807 branch 2	
Fault code	P0031
After sales description of the fault code	Oxygen sensor heating : Short circuit to earth
Description of the diagnostics	Electrical fault detected for 2 s
Conditions of activation of the diagnostics	Ignition switched on
Conditions of disappearance of the fault	Driving for 5 minutes
Down-grade modes if fault present	-
Switching on of the warning lamp and/or warning message	-

Main customer complaints likely	Slightly higher fuel consumption
Suspect areas	Oxygen sensor
	Electrical harness
	Connectors

Fault code(s): P0030 or P0031 or P0032 or P0053 or P0135

Reminder DTC

DTC no.	Alternative text of the DTC	Fault type	Conditions for fault finding	Downgraded mode after a fault is memorised	Driving safety risk	Suspected areas Major control steps	The client offers(highlights) associated with the DTC(s)	Fault code(s) to be dealt with before working through this flow chart	Tools required
P0030	Upstream oxygen sensor heating: Open circuit or overcurrent	4/1							
P0031	Upstream oxygen sensor heating: Short circuit to ground	3/1							
P0032	Upstream oxygen sensor heating: Short circuit to positive	3/2							
P0053	Upstream oxygen sensor heating: Resistance of the oxygen sensor heating circuit outside tolerance, old sensor	8/4							
P0135	Upstream oxygen sensor: Estimated temperature too high or too low, sensor heating no longer functions	8/4							

PRE-CHECK

FLOW CHART Test procedure

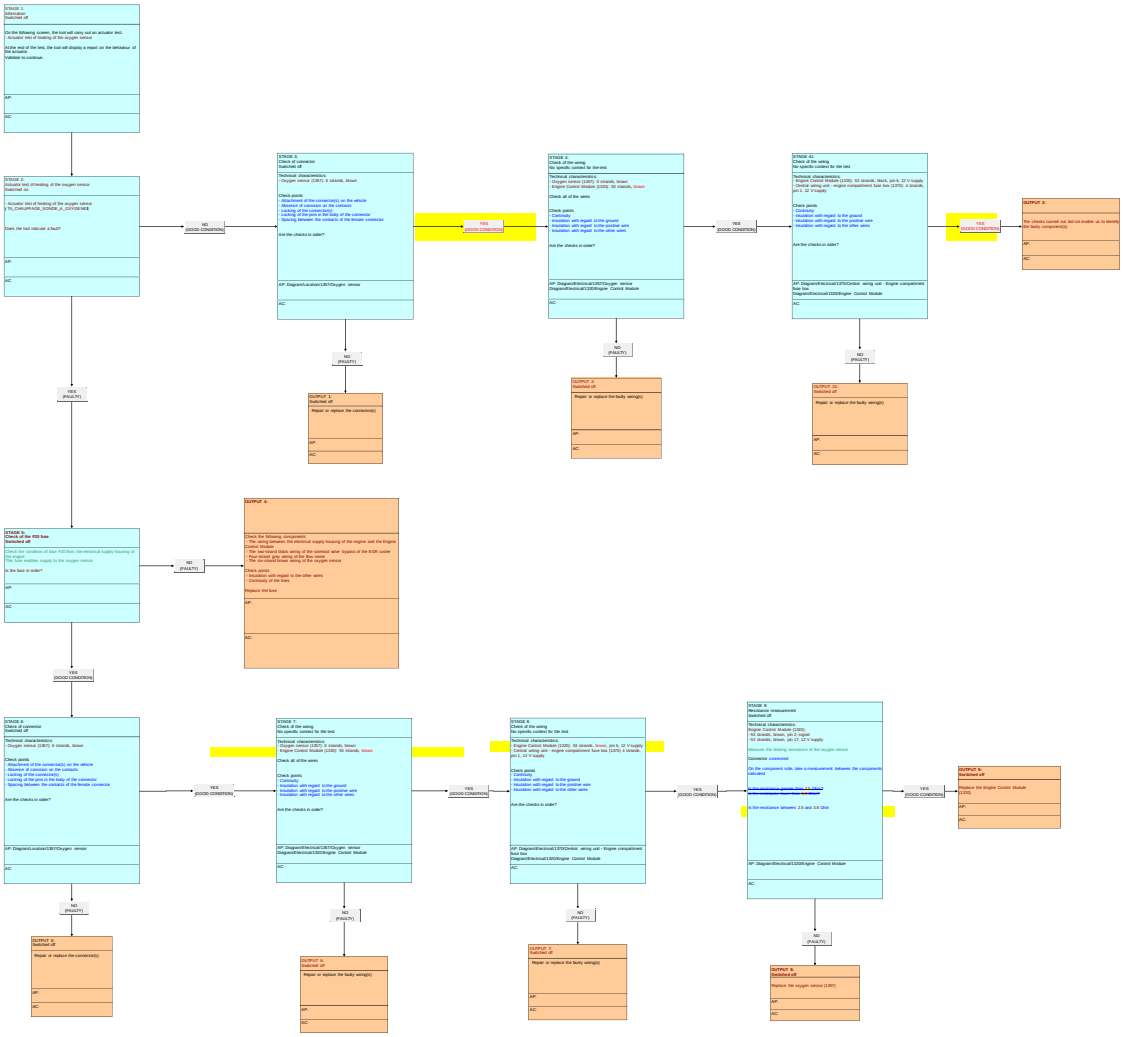

INFORMATION : FAULT CODE P0032 (ENGINE MANAGEMENT ECU)

SPECIAL FEATURE :

FOR : 1CB7 - B0FBM : DV6C TURBO DIESEL

FOR : 1CB8 - B0FBM : DV6C TURBO DIESEL

FOR : 1CXA - B0FBM : DV6C TURBO DIESEL

FOR : 1CX7 - B0FBM : DV6C TURBO DIESEL

FOR : 1CYA - B0FBM : DV6C TURBO DIESEL

FOR : 1C58 - B0FBM : DV6C TURBO DIESEL

FOR : 1PIA - B0FBM : DV6C TURBO DIESEL

FOR : 1PTB - B0FBM : DV6C TURBO DIESEL

FOR : 1PTC - B0FBM : DV6C TURBO DIESEL

FOR : 1PT7 - B0FBM : DV6C TURBO DIESEL

FOR : 1PW2 - B0FBM : DV6C TURBO DIESEL

FOR : 1CMJ - B0FBM : DV6C TURBO DIESEL

FOR : 1PMJ - B0FBM : DV6C TURBO DIESEL

Engine ECU CONTINENTAL SID 807 branch 2	
Fault code	P0032
After sales description of the fault code	Oxygen sensor heating : Short circuit to positive
Description of the diagnostics	Electrical fault detected for 2 s
Conditions of activation of the diagnostics	Ignition switched on
Conditions of disappearance of the fault	Driving for 5 minutes
Down-grade modes if fault present	-
Switching on of the warning lamp and/or warning message	-

Main customer complaints likely	Slightly higher fuel consumption
Suspect areas	Oxygen sensor
	Electrical harness
	Connectors

Fault code(s): P0030 or P0031 or P0032 or P0053 or P0135

Reminder DTC

DTC no.	Alternative text of the DTC	Fuel type	Conditions for fault finding	Downgraded mode after a fault is memorised	Driving safety risk	Suspected areas Major control steps	The client offers(d)/speaks(ds) associated with the DTC(s)	Fault code(s) to be dealt with before working through this flow chart	Tools required
P0030	Upstream oxygen sensor heating: Open circuit or overcurrent	GO							
P0031	Upstream oxygen sensor heating: Short circuit to ground	GO							
P0032	Upstream oxygen sensor heating: Short circuit to positive	GO							
P0053	Upstream oxygen sensor heating: Resistance of the oxygen sensor heating circuit outside tolerance, old sensor	GO							
P0135	Upstream oxygen sensor: Estimated temperature too high or too low, sensor heating no longer functions	GO							

PRE-CHECK

FLOW CHART Test procedure

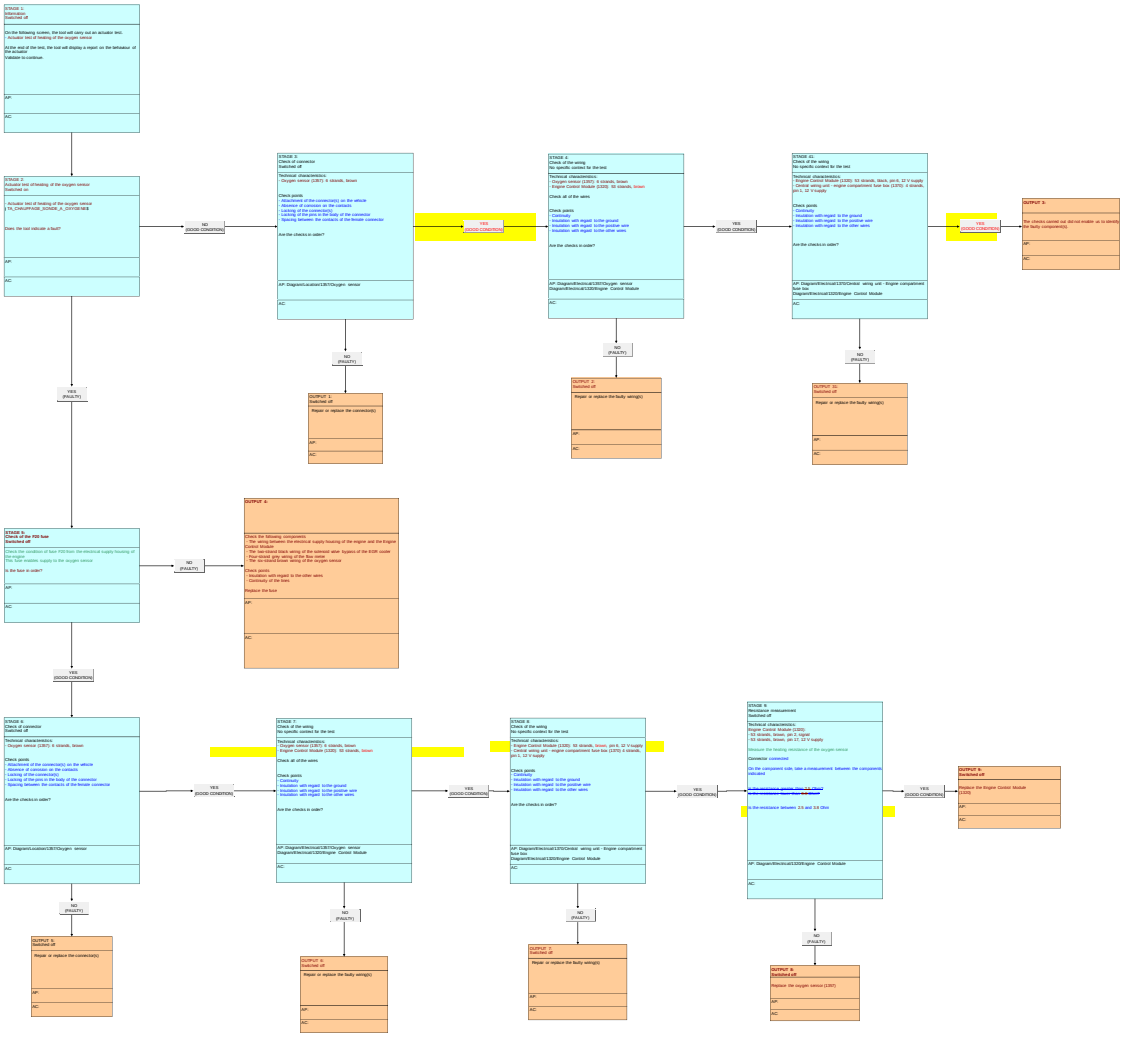

INFORMATION : FAULT CODE P0053 (ENGINE MANAGEMENT ECU)

SPECIAL FEATURE :

FOR : 1CB7 - B0FBM

FOR : 1CB8 - B0FBM

FOR : 1CXA - B0FBM

FOR : 1CX7 - B0FBM

FOR : 1CYA - B0FBM

FOR : 1C58 - B0FBM

FOR : 1PIA - B0FBM

FOR : 1PTB - B0FBM

FOR : 1PTC - B0FBM

FOR : 1PT7 - B0FBM

FOR : 1PW2 - B0FBM

FOR : 1CMJ - B0FBM

FOR : 1PMJ - B0FBM

Engine ECU CONTINENTAL SID 807 branch 2	
Fault code	P0053
After sales description of the fault code	Oxygen sensor heating : Resistance of the oxygen sensor heating circuit outside tolerance, sensor aged
Description of the diagnostics	Electrical fault detected for 500 ms
Conditions of activation of the diagnostics	Ignition switched on
Conditions of disappearance of the fault	Driving for 5 minutes
Down-grade modes if fault present	-
Switching on of the warning lamp and/or warning message	Engine diagnosis warning lamp
Main customer complaints likely	Slightly higher fuel consumption
Suspect areas	Oxygen sensor
	Electrical harness
	Connectors

Fault code(s): P0030 or P0031 or P0032 or P0053 or P0135

Reminder DTC

Do not fill in this section for the FLOW CHART phase

DTC no.	Alternative text of the DTC	Fuel type	Conditions for fault finding	Downgraded mode after a fault is memorised	Driving safety risk	Suspected areas Major control steps	The client offers(d)/proposes(d) associated with the DTC(s)	Fault code(s) to be dealt with before working through this flow chart	Tools required
P0030	Upstream oxygen sensor heating: Open circuit or overcurrent	DS							
P0031	Upstream oxygen sensor heating: Short circuit to ground	DS							
P0032	Upstream oxygen sensor heating: Short circuit to positive	DS							
P0053	Upstream oxygen sensor heating: Resistance of the oxygen sensor heating circuit outside tolerance, old sensor	DS							
P0135	Upstream oxygen sensor: Estimated temperature too high or too low; sensor heating no longer functions	DS							

PRE-CHECK

FLOW CHART Test procedure

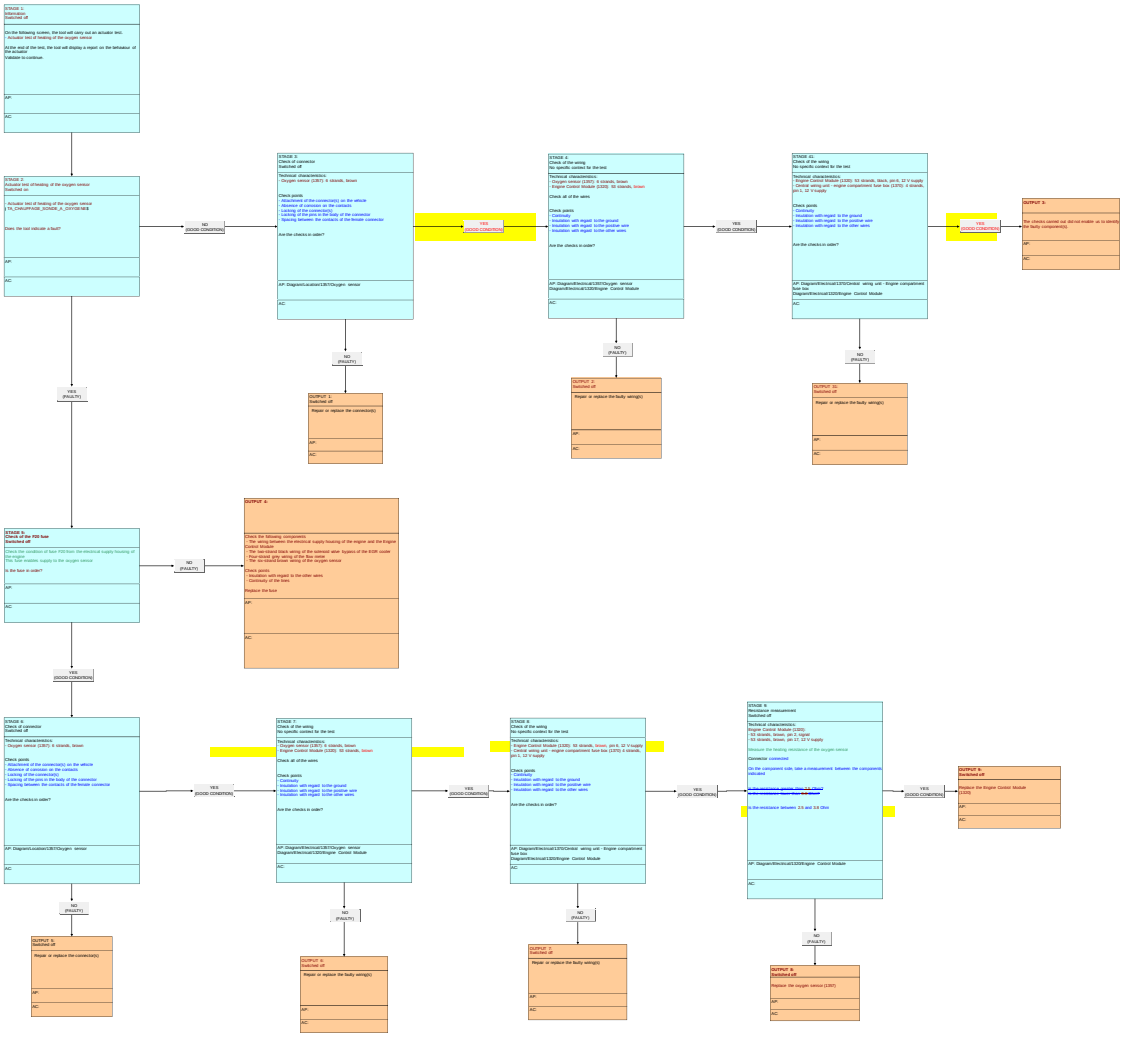

INFORMATION : FAULT CODE P0069 (ENGINE MANAGEMENT ECU)

SPECIAL FEATURE :

FOR : 1CB7 - B0FBM : DV6C TURBO DIESEL

FOR : 1CX7 - B0FBM : DV6C TURBO DIESEL

FOR : 1C58 - B0FBM : DV6C TURBO DIESEL

FOR : 1PT7 - B0FBM : DV6C TURBO DIESEL

FOR : 1PW2 - B0FBM : DV6C TURBO DIESEL

FOR : 1CB8 - B0FBM : DV6C TURBO DIESEL

FOR : 1CXA - B0FBM : DV6C TURBO DIESEL

FOR : 1CYA - B0FBM : DV6C TURBO DIESEL

FOR : 1PTB - B0FBM : DV6C TURBO DIESEL

FOR : 1PTC - B0FBM : DV6C TURBO DIESEL

FOR : 1PIA - B0FBM : DV6C TURBO DIESEL

FOR : 1CMJ - B0FBM : DV6C TURBO DIESEL

FOR : 1PMJ - B0FBM : DV6C TURBO DIESEL

Engine ECU CONTINENTAL SID 807 branch 2	
Fault code	P0069
After sales description of the fault code	Coherence fault : At idle, lack of coherence between the manifold inlet pressure measurement and the atmospheric pressure measurement
Description of the diagnostics	Difference of more than 100 mbar for 2 seconds between the values read by the atmospheric pressure and turbocharging pressure sensors (At idle)
Conditions of activation of the diagnostics	Engine running at idle (no particle emission filter regeneration in progress)
Conditions of disappearance of the fault	Engine running at idle (no particle emission filter regeneration in progress)
	Closing of the EGR (exhaust gas recycling) valve
	Irreversible deactivation of the vehicle speed limiter
	Irreversible deactivation of the vehicle cruise control
	Deactivation of taking account of the tight spot information
	Switching of the turbocharging pressure regulation to

Down-grade modes if fault present	controlled mode
	Switching to fuel "normal reduced flow" mode
	Deactivation of the request for regeneration of the particle filter from the diagnostic tool
	Deactivation of the "easy-move" (electric parking brake) functionality
Switching on of the warning lamp and/or warning message	Warning lamp MIL
	"SERVICE" warning lamp
Main customer complaints likely	Jerking/stalling
	Noise
	Lack of power
	Absence of automatic stopping of the internal combustion engine (If the vehicle has the Stop and Start system)
	Problem with automatic restarting of the internal combustion engine (If the vehicle has the Stop and Start system)
Suspect areas	Atmospheric pressure sensor in the engine management ECU
	Manifold air entry pressure sensor
	Electrical harnesses
	Connectors

Fault code(s): P0069

Reminder DTC

DTC no.	Alternative text of the DTC	Tick a box	Conditions for fault finding	Downgraded mode after a fault is memorised	Illuminated warning lamp	Suspected versus Major control lamps	The client ethos(@)gmglobe(@) associated with the DTCs	Fault code(s) to be dealt with before working through this flow chart	Tools required
P0069	Inconsistency fault: Inconsistency between the boost pressure and the atmospheric pressure when idling	X							

PRE-CHECK

FLOWCHART Test procedure

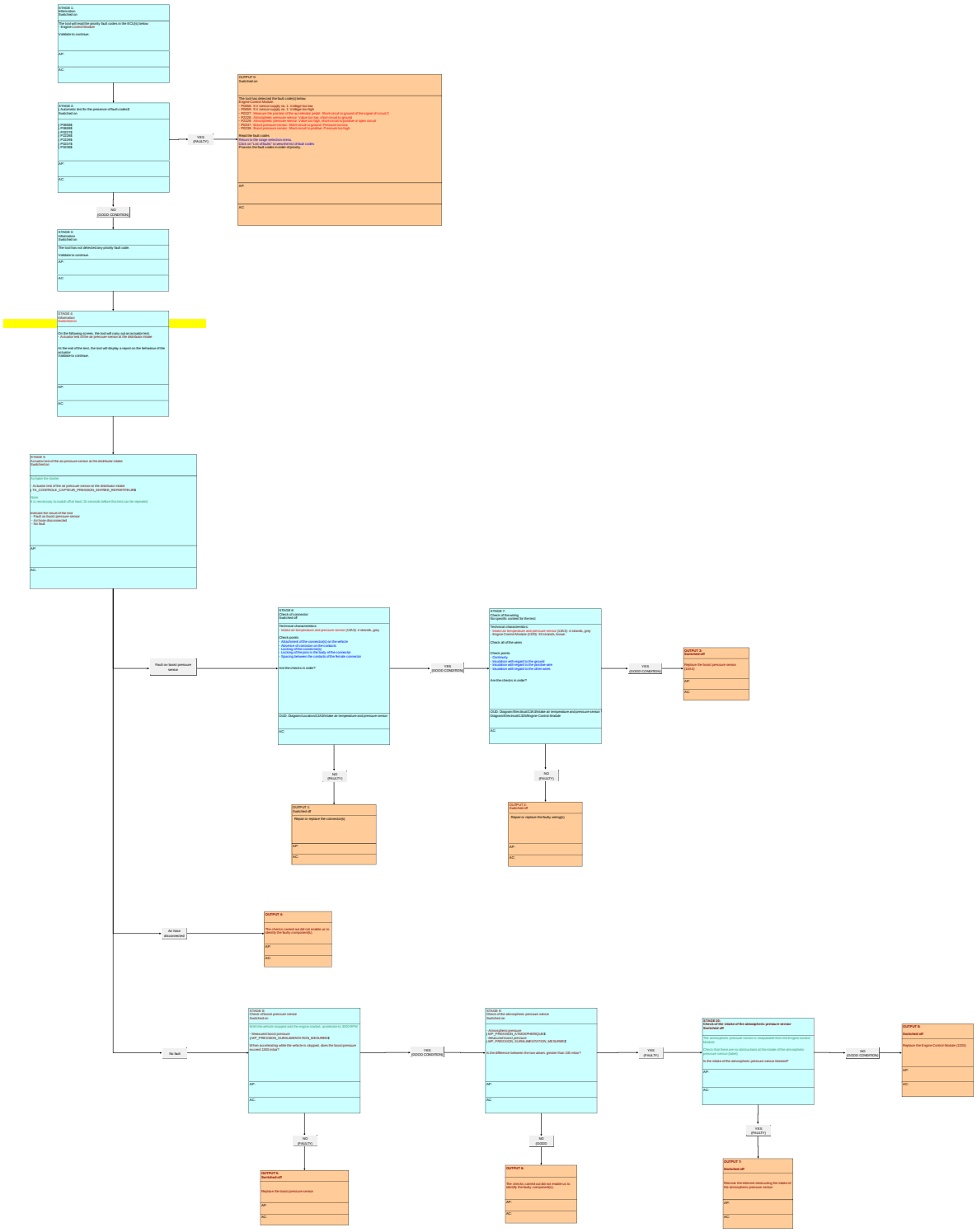

INFORMATION : FAULT CODE P0070 (ENGINE MANAGEMENT ECU)

SPECIAL FEATURE :

FOR : 1CB7 - B0FBM : DV6C TURBO DIESEL

FOR : 1CX7 - B0FBM : DV6C TURBO DIESEL

FOR : 1C58 - B0FBM : DV6C TURBO DIESEL

FOR : 1PT7 - B0FBM : DV6C TURBO DIESEL

FOR : 1PW2 - B0FBM : DV6C TURBO DIESEL

FOR : 1CB8 - B0FBM : DV6C TURBO DIESEL

FOR : 1CXA - B0FBM : DV6C TURBO DIESEL

FOR : 1CYA - B0FBM : DV6C TURBO DIESEL

FOR : 1PTB - B0FBM : DV6C TURBO DIESEL

FOR : 1PTC - B0FBM : DV6C TURBO DIESEL

FOR : 1PIA - B0FBM : DV6C TURBO DIESEL

FOR : 1CMJ - B0FBM : DV6C TURBO DIESEL

FOR : 1PMJ - B0FBM : DV6C TURBO DIESEL

Engine ECU CONTINENTAL SID 807 branch 2	
Fault code	P0070
After sales description of the fault code	Intersystems CAN : Outside temperature value received via the CAN not valid
Description of the diagnostics	Air temperature information received by the engine management ECU on the CAN not valid
Conditions of activation of the diagnostics	At least one of the following conditions must be fulfilled - Ignition switched on - Engine running
Conditions of disappearance of the fault	-
Down-grade modes if fault present	-
Switching on of the warning lamp	-

and/or warning message	
Main customer complaints likely	Jerking/stalling
	Lack of power
	Starting problem
Suspect areas	Engine management ECU
	Intersystems CAN

Fault code(s): U0322 or U1218 or U1318 or P0070 or P0571

Reminder DTC

Do not fill in this section for the FLOW CHART phase

DTC n/a	Aftersales text of the DTC	Fault type	Conditions for fault finding	Downgraded mode after a fault is ascertained	Warning light/ Stop lamp	Suspected areas Major control steps	The client effect(s)/symptom(s) associated with the DTCs	Fault code(s) to be dealt with before working through this flow chart	Tools required
U0322	CAN inter-system network: Length error or value forbidden by the BSI framework with an OBD impact	F							
U1218	CAN inter-system network: One of the parameters present in a framework output by the BSI is invalid	F							
U1318	CAN inter-system network: Length error or value forbidden by the BSI framework	F							
P0070	CAN inter-system network: Invalid value for the external air temperature received by the CAN	F							
P0571	CAN inter-system network: Erroneous information on the main brake output by the BSI	F							

PRE-CHECK

FLOW CHART Test procedure

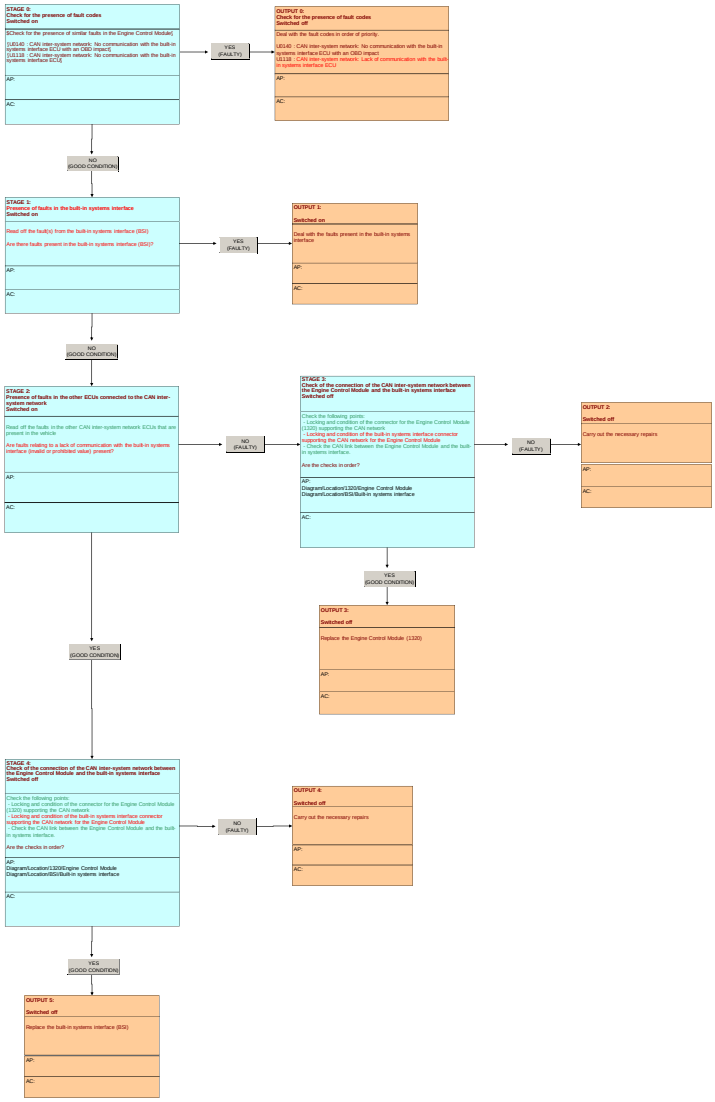

INFORMATION : FAULT CODE P0087 (ENGINE MANAGEMENT ECU)

SPECIAL FEATURE :

FOR : 1CMJ - B0FBM : DV6C TURBO DIESEL

FOR : 1PMJ - B0FBM : DV6C TURBO DIESEL

Engine ECU CONTINENTAL SID 807 branch 2	
Fault code	P0087
After sales description of the fault code	Fuel circuit : The pressure measured in the injection rail is less than the setting
Description of the diagnostics	The measured pressure is below the reference value by more than 9% (For 1,2 seconds)
Conditions of activation of the diagnostics	Engine running
Conditions of disappearance of the fault	Driving for 5 minutes with several full load accelerations for 10 seconds
Down-grade modes if fault present	Closing of the EGR (exhaust gas recycling) valve
	Irreversible deactivation of the vehicle speed limiter
	Irreversible deactivation of the vehicle cruise control
	Deactivation of taking account of the tight spot information
	Switching of the turbocharging pressure regulation to controlled mode
	Switching to fuel "normal reduced flow" mode
	Sending of the information "torque uncertain" on the CAN network
Switching on of the warning lamp and/or warning message	Warning lamp MIL
Main customer complaints likely	Jerking/stalling
	Lack of power
	Starting problem
	Slightly higher fuel consumption
	Fluid leak/smells (diesel fuel, oil, etc.)
	Cutting of the vehicle speed limiter
	Cutting of cruise control
	Difficult to engage gears
	Noise
	Engine acceleration at wrong time
	Smoke from the exhaust
	Absence of automatic stopping of the internal combustion engine (If the vehicle has the Stop and Start system)
	Poor quality of the fuel or type of fuel

Suspect areas	Air leak on the fuel filter
	Clogging of the fuel filter
	Leak in fuel circuit (low pressure)
	Blockage on the low pressure fuel return circuit
	Fuel high pressure flow regulator
	high pressure fuel pump
	Pressure sensor on the fuel high-pressure injection rail
	Leak on the high pressure fuel pipes
	Leak on the fuel high pressure common injection rail
	Fuel injectors
	Electrical harnesses
	Connectors

Fault code(s): P0087 or P0093 or P2291

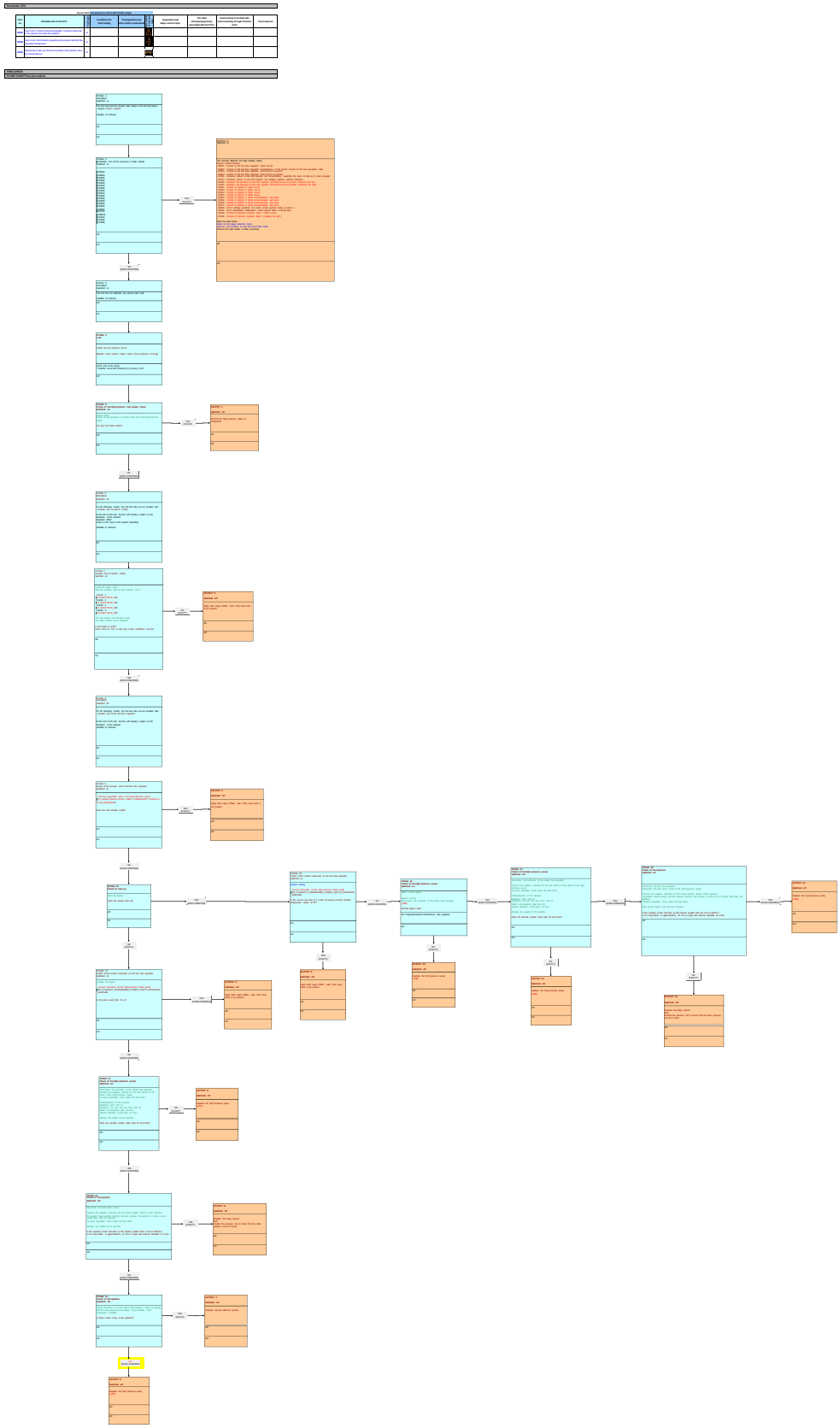

INFORMATION : FAULT CODE P0088 (ENGINE MANAGEMENT ECU)

SPECIAL FEATURE :

FOR : 1CB7 - B0FBM : DV6C TURBO DIESEL

FOR : 1CX7 - B0FBM : DV6C TURBO DIESEL

FOR : 1C58 - B0FBM : DV6C TURBO DIESEL

FOR : 1PT7 - B0FBM : DV6C TURBO DIESEL

FOR : 1PW2 - B0FBM : DV6C TURBO DIESEL

FOR : 1CB8 - B0FBM : DV6C TURBO DIESEL

FOR : 1CXA - B0FBM : DV6C TURBO DIESEL

FOR : 1CYA - B0FBM : DV6C TURBO DIESEL

FOR : 1PTB - B0FBM : DV6C TURBO DIESEL

FOR : 1PTC - B0FBM : DV6C TURBO DIESEL

FOR : 1PIA - B0FBM : DV6C TURBO DIESEL

FOR : 1CMJ - B0FBM : DV6C TURBO DIESEL

FOR : 1PMJ - B0FBM : DV6C TURBO DIESEL

Engine ECU CONTINENTAL SID 807 branch 2	
Fault code	P0088
After sales description of the fault code	Fuel circuit : Pressure measured in the injection rail above the reference
Description of the diagnostics	The pressure measured is above the reference by more than 9 % (For 1,2 seconds)
Conditions of activation of the diagnostics	Engine running
Conditions of disappearance of the fault	Driving for 5 minutes with several full load accelerations for 10 seconds
Down-grade modes if fault present	Irreversible deactivation of the vehicle speed limiter
	Irreversible deactivation of the vehicle cruise control
	Deactivation of taking account of the tight spot information
	Switching to fuel "normal reduced flow" mode
	Deactivation of the request for regeneration of the particle filter from the diagnostic tool

	Sending of the information "torque uncertain" on the CAN network
Switching on of the warning lamp and/or warning message	Warning lamp MIL
	"SERVICE" warning lamp
Main customer complaints likely	Jerking/stalling
	Lack of power
	Starting problem
	Engine acceleration at wrong time
	Noise
	Smoke from the exhaust
	Absence of automatic stopping of the internal combustion engine (If the vehicle has the Stop and Start system)
Suspect areas	Air leak on the low pressure fuel supply circuit
	Air leak on the fuel filter
	Fuel high pressure flow regulator
	Pressure sensor on the fuel high-pressure injection rail
	Mechanical pressure limiter jammed
	Fuel injectors
	Electrical harnesses
	Connectors

Fault code(s): P0088 or P1166 or P1294 or P1176

Reminder DTC

Do not do this section for the FLOW CHART phase

DTC no.	Alternates text of the DTC	Hard type	Conditions for fault finding	Downgraded mode after a fault is ascertained	Driver action	Suspected areas Major control steps	The client eTR+EX(Symptom(s) associated with the DTC)	Fault code(s) to be dealt with before working through this flow chart	Tools required
P0088	Fuel circuit / Control of the flow regulator: Pressure measured in the injection rail higher than setpoint	A							
P1166	Fuel circuit: Maximum rail pressure exceeded	B							
P1294	Fuel circuit: Maximum rail pressure exceeded at times	B							
P1176	Fuel flow regulator: blocked	B							

PRE-CHECK
FLOW CHART Test procedure

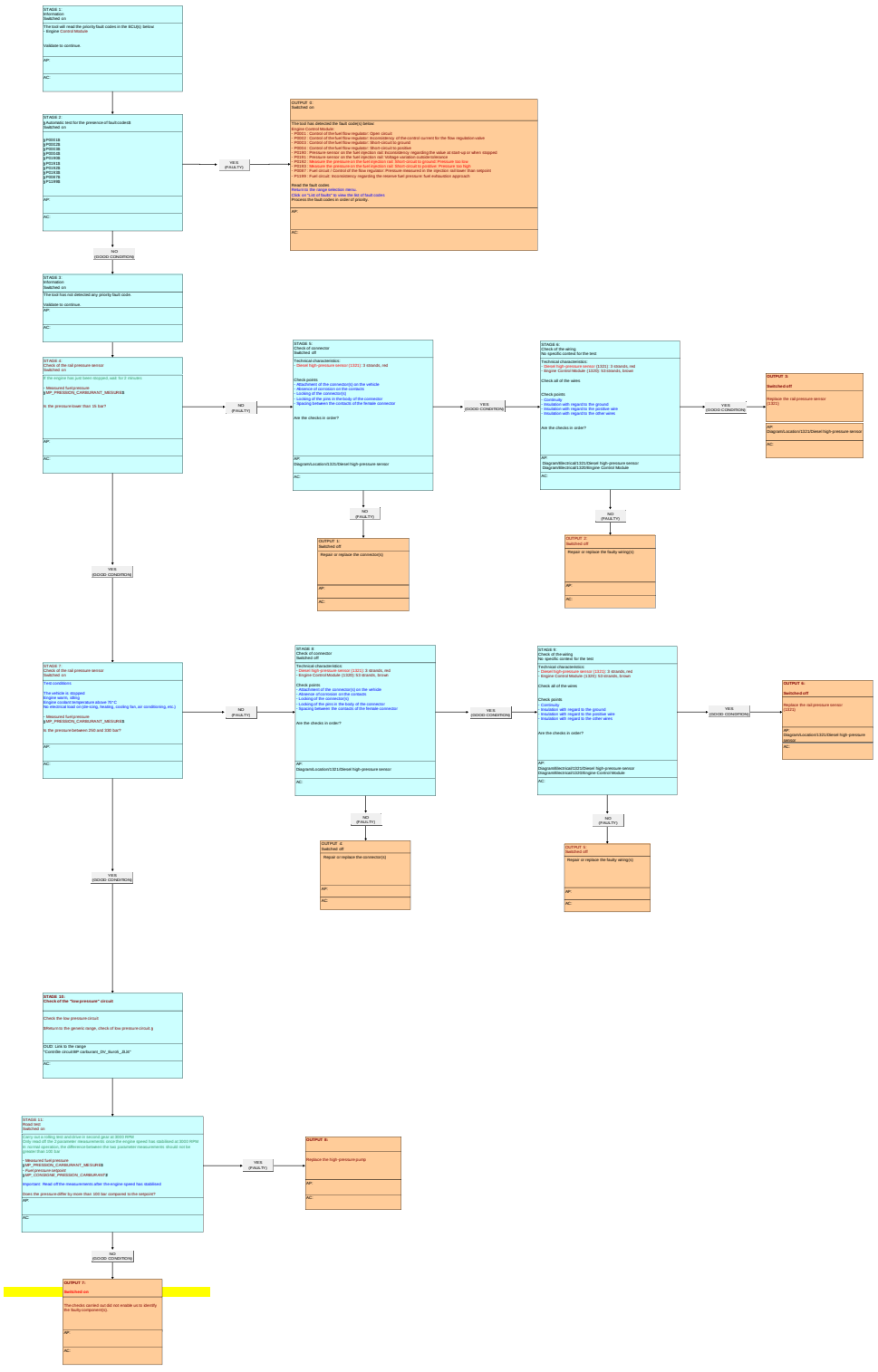

INFORMATION : FAULT CODE P0093 (ENGINE MANAGEMENT ECU)

SPECIAL FEATURE :

FOR : 1CMJ - B0FBM : DV6C TURBO DIESEL

FOR : 1PMJ - B0FBM : DV6C TURBO DIESEL

Engine ECU CONTINENTAL SID 807 branch 2	
Fault code	P0093
After sales description of the fault code	Fuel system : Incoherence on the fuel pressure with the flow regulator jammed open
Description of the diagnostics	Following the appearance of the fault: discrepancy in the positive loop in the fuel high pressure rail, fault confirmed for 30 s resulting in a stopping of the engine
Conditions of activation of the diagnostics	The following conditions have to be met - The engine coolant temperature is higher than 70 °C - Engine speed between 1750 and 4500 rpm - Heavy injected flow
Conditions of disappearance of the fault	Driving for 5 minutes with several full load accelerations for 10 seconds
Down-grade modes if fault present	Cutting of fuel injector 1
	Cutting of fuel injector 2
	Cutting of fuel injector 3
	Cutting of fuel injector 4
	Closing of the fuel flow regulation valve
Switching on of the warning lamp and/or warning message	Warning lamp MIL
Main customer complaints likely	Jerking/stalling
	Lack of power
	Starting problem
	Slightly higher fuel consumption
	Fluid leak/smells (diesel fuel, oil, etc.)
	Cutting of the vehicle speed limiter
	Cutting of cruise control
	Engine acceleration at wrong time
	Smoke from the exhaust
	Noise
	Absence of automatic stopping of the internal combustion engine (If the vehicle has the Stop and Start system)
	Poor quality of the fuel or type of fuel
	Air leak on the fuel filter

Suspect areas	Clogging of the fuel filter
	Leak on the fuel circuit Low pressure
	Blockage on the low pressure fuel return circuit
	Fuel high pressure flow regulator
	high pressure fuel pump
	Pressure sensor on the fuel high-pressure injection rail
	Leak on the high pressure fuel pipes
	Leak on the fuel high pressure common injection rail
	Mechanical pressure limiter jammed
	Fuel injectors
	Electrical harnesses
	Connectors

Fault code(s): P0087 or P0093 or P2291

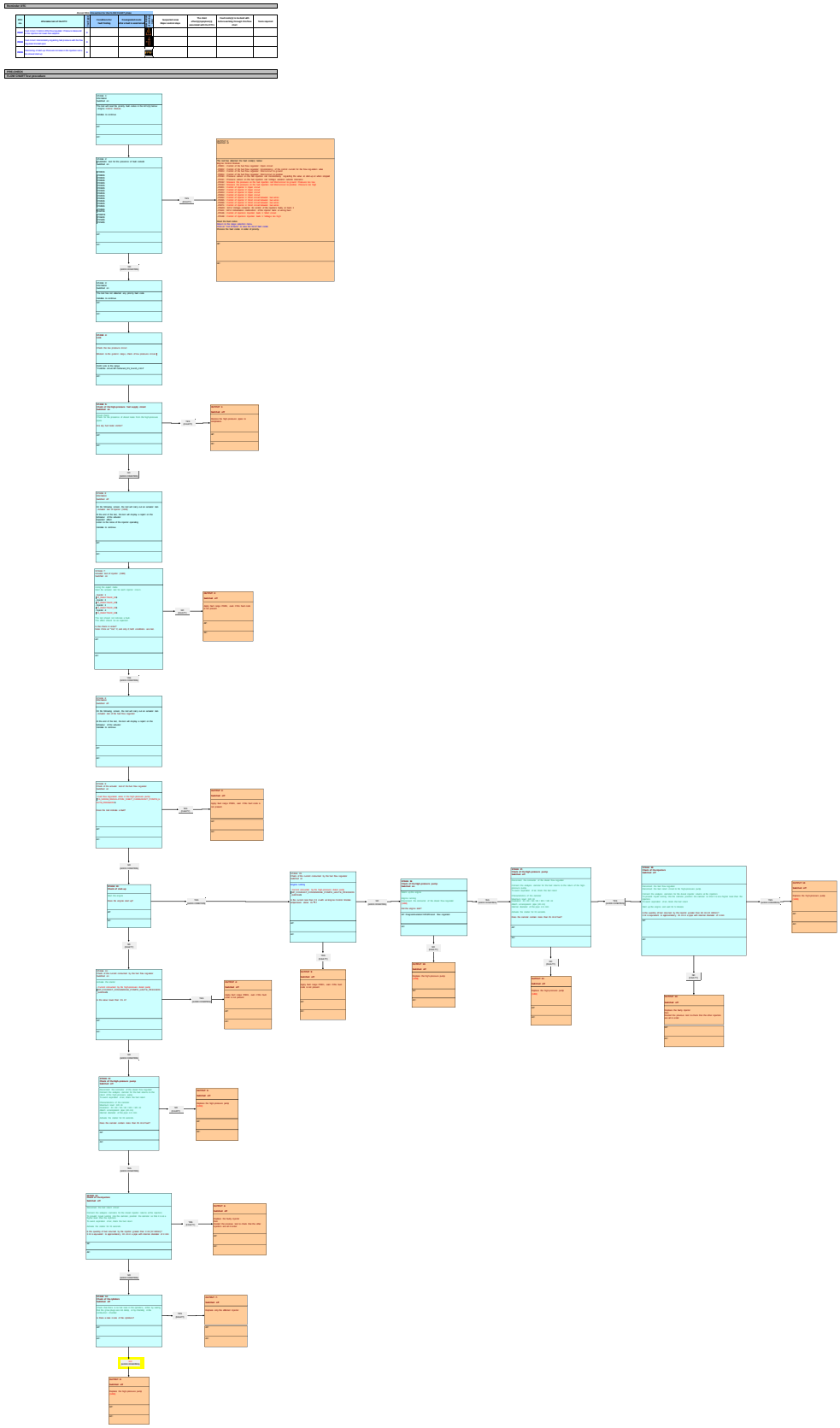

INFORMATION : FAULT CODE P0097 (ENGINE MANAGEMENT ECU)

SPECIAL FEATURE :

FOR : 1CB7 - B0FBM : DV6C TURBO DIESEL

FOR : 1CX7 - B0FBM : DV6C TURBO DIESEL

FOR : 1C58 - B0FBM : DV6C TURBO DIESEL

FOR : 1PT7 - B0FBM : DV6C TURBO DIESEL

FOR : 1PW2 - B0FBM : DV6C TURBO DIESEL

FOR : 1CB8 - B0FBM : DV6C TURBO DIESEL

FOR : 1CXA - B0FBM : DV6C TURBO DIESEL

FOR : 1CYA - B0FBM : DV6C TURBO DIESEL

FOR : 1PTB - B0FBM : DV6C TURBO DIESEL

FOR : 1PTC - B0FBM : DV6C TURBO DIESEL

FOR : 1PIA - B0FBM : DV6C TURBO DIESEL

FOR : 1CMJ - B0FBM : DV6C TURBO DIESEL

FOR : 1PMJ - B0FBM : DV6C TURBO DIESEL

Engine ECU CONTINENTAL SID 807 branch 2	
Fault code	P0097
After sales description of the fault code	Measurement of the manifold inlet air temperature : Short circuit to earth : Temperature too high
Description of the diagnostics	Voltage lower than 100 mV for 1 s
Conditions of activation of the diagnostics	Ignition switched on
Conditions of disappearance of the fault	Driving for 5 minutes
Down-grade modes if fault present	Closing of the EGR (exhaust gas recycling) valve
	Irreversible deactivation of the vehicle speed limiter
	Irreversible deactivation of the vehicle cruise control
	Switching of the turbocharging pressure regulation to controlled mode
	Sending of the information "torque uncertain" on the CAN

	network
	For a gearbox with engine speed regulation (automatic gearbox or piloted manual gearbox), limitation of the torque sent to the gearbox
Switching on of the warning lamp and/or warning message	Warning lamp MIL
Main customer complaints likely	Slightly higher fuel consumption
	Noise
	Smoke from the exhaust
Suspect areas	Manifold entry air temperature sensor
	Electrical harness
	Connectors

Fault code(s): P0097 or P0098

Reminder DTC

Do not fill in this section for the FLOW CHART phase

DTC no.	Aftersales text of the DTC	Malfunction	Conditions for fault finding	Downgraded mode after a fault is ascertained	Driver warning light	Suspected areas Major control steps	The client effect(s)/symptom(s) associated with the DTC(s)	Fault code(s) to be dealt with before working through this flow chart	Tools required
P0097	Intake air temperature sensor: Short-circuit to ground: Temperature too high								
P0098	Intake air temperature sensor: Short-circuit to positive or open circuit: Temperature too low								

PRE-CHECK
FLOW CHART Test procedure

Thermistor Transfer Characteristics

Temperature-Resistance Characteristic						
Temperature (T)	-40	-35	-30	-25	-20	-15
Typical resistance (kΩ)	206.8	156.1	120.4	92.48	71.67	55.99
Δt (T)	5±2.5					
Measurement current	MAX 1mA				MAX 10μA	
Temperature (T)	-10	-5	0	5	10	15
Typical resistance (kΩ)	44.09	34.97	27.94	22.47	18.19	14.81
Δt (T)	5±2.5			5±1.5		
Measurement current	MAX 10μA					
Temperature (T)	20	25	30	35	40	45
Typical resistance (kΩ)	12.14	10.00	8.285	6.899	5.774	4.858
Δt (T)	5±1.5					
Measurement current	MAX 10μA		MAX 100μA			
Temperature (T)	50	55	60	65	70	75
Typical resistance (kΩ)	4.103	3.482	2.967	2.539	2.182	1.882
Δt (T)	5±1.5					
Measurement current	MAX 100μA					
Temperature (T)	80	85	90	95	100	105
Typical resistance (kΩ)	1.629	1.415	1.234	1.078	0.9466	0.8331
Δt (T)	5±1.5					
Measurement current	MAX 100μA					MAX 1000μA
Temperature (T)	110	115	120	125	130	135
Typical resistance (kΩ)	0.7355	0.6511	0.5781	0.5146	0.4594	0.4111
Δt (T)	5±2.5			5±1.5		
Measurement current	MAX 1000μA					
Temperature (T)	140	145				
Typical resistance (kΩ)	0.3688	0.3316				
Δt (T)	5±2.5					
Measurement current	MAX 1000μA					

MEASUREMENT POINT: -40, 20, 130℃
CONTROL POINT: 25℃

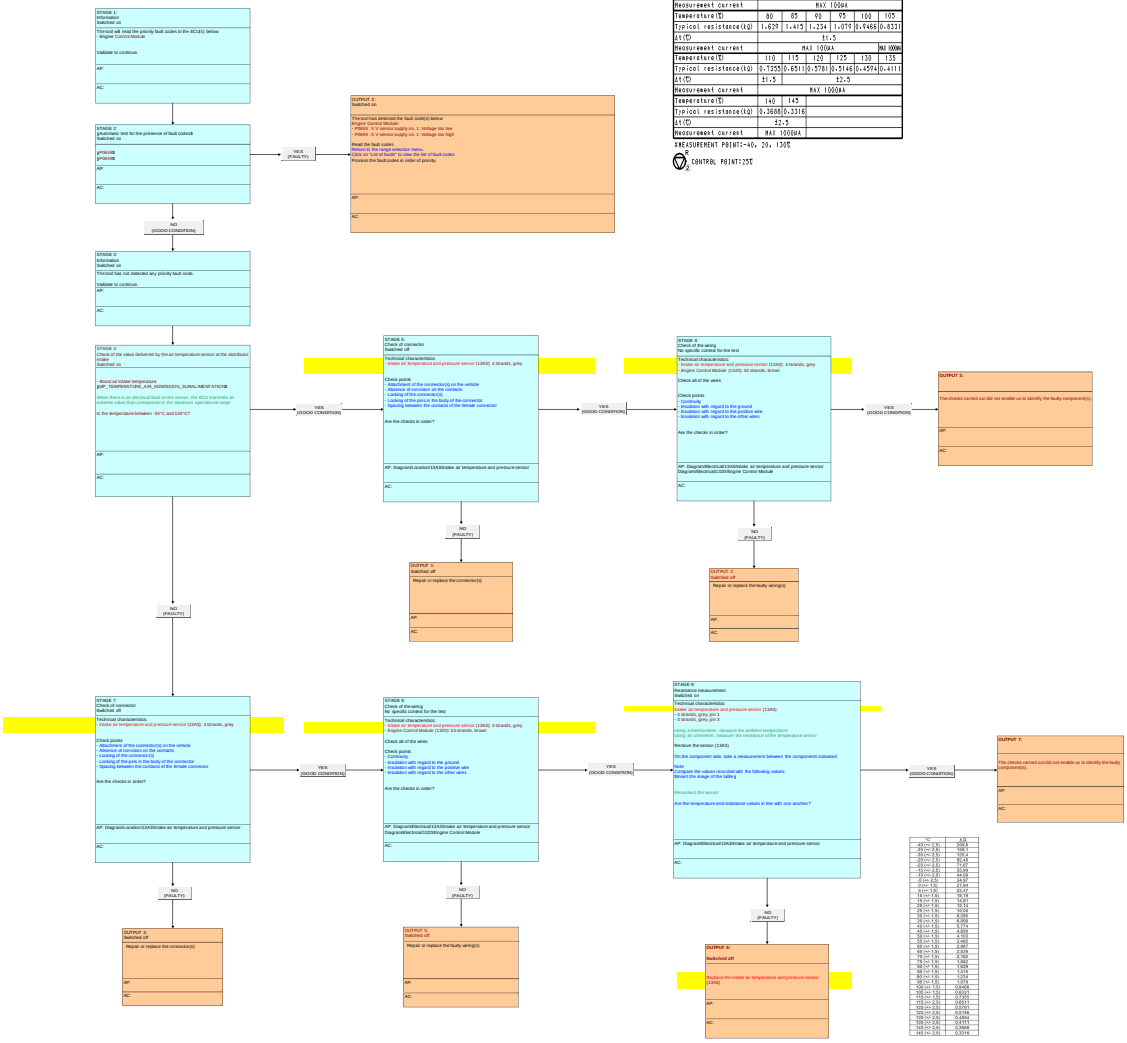

°C	Ω
-40 °C (-40 °F)	206.8
-35 °C (-31 °F)	156.1
-30 °C (-22 °F)	120.4
-25 °C (-13 °F)	92.48
-20 °C (-4 °F)	71.67
-15 °C (5 °F)	55.99
-10 °C (14 °F)	44.09
-5 °C (23 °F)	34.97
0 °C (32 °F)	27.94
5 °C (41 °F)	22.47
10 °C (50 °F)	18.19
15 °C (59 °F)	14.81
20 °C (68 °F)	12.14
25 °C (77 °F)	10.00
30 °C (86 °F)	8.285
35 °C (95 °F)	6.899
40 °C (104 °F)	5.774
45 °C (113 °F)	4.858
50 °C (122 °F)	4.103
55 °C (131 °F)	3.482
60 °C (140 °F)	2.967
65 °C (149 °F)	2.539
70 °C (158 °F)	2.182
75 °C (167 °F)	1.882
80 °C (176 °F)	1.629
85 °C (185 °F)	1.415
90 °C (194 °F)	1.234
95 °C (203 °F)	1.078
100 °C (212 °F)	0.9466
105 °C (221 °F)	0.8331
110 °C (230 °F)	0.7355
115 °C (239 °F)	0.6511
120 °C (248 °F)	0.5781
125 °C (257 °F)	0.5146
130 °C (266 °F)	0.4594
135 °C (275 °F)	0.4111
140 °C (284 °F)	0.3688
145 °C (293 °F)	0.3316

INFORMATION : FAULT CODE P0098 (ENGINE MANAGEMENT ECU)

SPECIAL FEATURE :

FOR : 1CB7 - B0FBM : DV6C TURBO DIESEL

FOR : 1CX7 - B0FBM : DV6C TURBO DIESEL

FOR : 1C58 - B0FBM : DV6C TURBO DIESEL

FOR : 1PT7 - B0FBM : DV6C TURBO DIESEL

FOR : 1PW2 - B0FBM : DV6C TURBO DIESEL

FOR : 1CB8 - B0FBM : DV6C TURBO DIESEL

FOR : 1CXA - B0FBM : DV6C TURBO DIESEL

FOR : 1CYA - B0FBM : DV6C TURBO DIESEL

FOR : 1PTB - B0FBM : DV6C TURBO DIESEL

FOR : 1PTC - B0FBM : DV6C TURBO DIESEL

FOR : 1PIA - B0FBM : DV6C TURBO DIESEL

FOR : 1CMJ - B0FBM : DV6C TURBO DIESEL

FOR : 1PMJ - B0FBM : DV6C TURBO DIESEL

Engine ECU CONTINENTAL SID 807 branch 2	
Fault code	P0098
After sales description of the fault code	Measurement of the manifold inlet air temperature : Short circuit to positive or open circuit : Temperature too low
Description of the diagnostics	Voltage higher than 4,9 V for 1 seconds
Conditions of activation of the diagnostics	Ignition switched on
Conditions of disappearance of the fault	Driving for 5 minutes
Down-grade modes if fault present	Closing of the EGR (exhaust gas recycling) valve
	Irreversible deactivation of the vehicle speed limiter
	Irreversible deactivation of the vehicle cruise control
	Switching of the turbocharging pressure regulation to controlled mode
	Sending of the information "torque uncertain" on the CAN

	network
	For a gearbox with engine speed regulation (automatic gearbox or piloted manual gearbox), limitation of the torque sent to the gearbox
Switching on of the warning lamp and/or warning message	Warning lamp MIL
Main customer complaints likely	Slightly higher fuel consumption
	Noise
	Smoke from the exhaust
Suspect areas	Manifold entry air temperature sensor
	Electrical harness
	Connectors

Fault code(s): P0097 or P0098

Reminder DTC

Do not fix all the causes for the FLOW CHART phase

DTC no.	Aftersales text of the DTC	Malfunction	Conditions for fault finding	Downgraded mode after a fault is ascertained	Driver warning light	Suspected areas Major control steps	The client effects(symptoms) associated with the DTCs	Fault code(s) to be dealt with before working through this flow chart	Tools required
P0097	Intake air temperature sensor: Short-circuit to ground: Temperature too high								
P0098	Intake air temperature sensor: Short-circuit to positive or open circuit: Temperature too low								

PRE-CHECK

FLOW CHART Test procedure

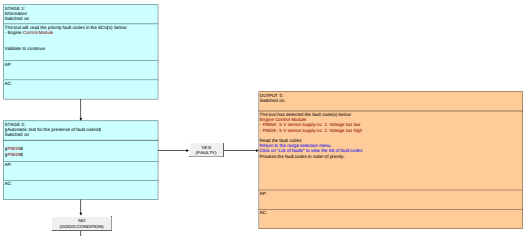

Thermistor Transfer Characteristics

Temperature-Resistance Characteristic						
Temperature(T)	-40	-35	-30	-25	-20	-15
Typical resistance(kΩ)	206.8	156.1	120.4	92.48	71.67	55.99
Δ(T)	5±2.5					
Measurement current	MAX 1mA				MAX 10µA	
Temperature(T)	-10	-5	0	5	10	15
Typical resistance(kΩ)	44.09	34.97	27.94	22.47	18.19	14.81
Δ(T)	5±2.5			5±1.5		
Measurement current	MAX 10µA					
Temperature(T)	20	25	30	35	40	45
Typical resistance(kΩ)	12.14	10.00	8.285	6.899	5.774	4.858
Δ(T)	5±1.5					
Measurement current	MAX 10µA		MAX 100µA			
Temperature(T)	50	55	60	65	70	75
Typical resistance(kΩ)	4.103	3.482	2.967	2.539	2.182	1.882
Δ(T)	5±1.5					
Measurement current	MAX 100µA					
Temperature(T)	80	85	90	95	100	105
Typical resistance(kΩ)	1.629	1.415	1.234	1.078	0.9466	0.8331
Δ(T)	5±1.5					
Measurement current	MAX 100µA					Mx 100µA
Temperature(T)	110	115	120	125	130	135
Typical resistance(kΩ)	0.7355	0.6511	0.5781	0.5146	0.4594	0.4111
Δ(T)	5±2.5			5±1.5		
Measurement current	MAX 1000µA					
Temperature(T)	140	145				
Typical resistance(kΩ)	0.3688	0.3316				
Δ(T)	5±2.5					
Measurement current	MAX 1000µA					

MEASUREMENT POINT:-40, 20, 130℃

CONTROL POINT:25℃

-40 (+/- 2.5)	206.8
-35 (+/- 2.5)	156.1
-30 (+/- 2.5)	120.4
-25 (+/- 2.5)	92.48
-20 (+/- 2.5)	71.67
-15 (+/- 2.5)	55.99
-10 (+/- 2.5)	44.09
-5 (+/- 2.5)	34.97
0 (+/- 1.5)	27.94
5 (+/- 1.5)	22.47
10 (+/- 1.5)	18.19
15 (+/- 1.5)	14.81
20 (+/- 1.5)	12.14
25 (+/- 1.5)	10.00
30 (+/- 1.5)	8.285
35 (+/- 1.5)	6.899
40 (+/- 1.5)	5.774
45 (+/- 1.5)	4.858
50 (+/- 1.5)	4.103
55 (+/- 1.5)	3.482
60 (+/- 1.5)	2.967
65 (+/- 1.5)	2.539
70 (+/- 1.5)	2.182
75 (+/- 1.5)	1.882
80 (+/- 1.5)	1.629
85 (+/- 1.5)	1.415
90 (+/- 1.5)	1.234
95 (+/- 1.5)	1.078
100 (+/- 1.5)	0.9466
105 (+/- 1.5)	0.8331
110 (+/- 2.5)	0.7355
115 (+/- 2.5)	0.6511
120 (+/- 2.5)	0.5781
125 (+/- 2.5)	0.5146
130 (+/- 2.5)	0.4594
135 (+/- 2.5)	0.4111
140 (+/- 2.5)	0.3688
145 (+/- 2.5)	0.3316

INFORMATION : FAULT CODE P009A (ENGINE MANAGEMENT ECU)

SPECIAL FEATURE :

FOR : 1CB7 - B0FBM : DV6C TURBO DIESEL

FOR : 1CX7 - B0FBM : DV6C TURBO DIESEL

FOR : 1C58 - B0FBM : DV6C TURBO DIESEL

FOR : 1PT7 - B0FBM : DV6C TURBO DIESEL

FOR : 1PW2 - B0FBM : DV6C TURBO DIESEL

FOR : 1CB8 - B0FBM : DV6C TURBO DIESEL

FOR : 1CXA - B0FBM : DV6C TURBO DIESEL

FOR : 1CYA - B0FBM : DV6C TURBO DIESEL

FOR : 1PTB - B0FBM : DV6C TURBO DIESEL

FOR : 1PTC - B0FBM : DV6C TURBO DIESEL

FOR : 1PIA - B0FBM : DV6C TURBO DIESEL

FOR : 1CMJ - B0FBM : DV6C TURBO DIESEL

FOR : 1PMJ - B0FBM : DV6C TURBO DIESEL

Engine ECU CONTINENTAL SID 807 branch 2	
Fault code	P009A
After sales description of the fault code	Measurement of the manifold inlet air temperature : Calculation of the ambient air temperature impossible
Description of the diagnostics	Estimate of the outside air temperature faulty (due to the loss of the measurement of the air temperature at the air flow sensor)
Conditions of activation of the diagnostics	-
Conditions of disappearance of the fault	-
Down-grade modes if fault present	-
Switching on of the warning lamp and/or warning message	-
Main customer	Slightly higher fuel consumption

complaints likely	Smoke from the exhaust
Suspect areas	Air temperature sensor at the air flowmeter
	Electrical harness
	Connectors

Fault code(s): P0112 or P0113 or P009A

Reminder DTC

Do not fill in this section for the FLOW CHART phase

DTC no.	Alternate text of the DTC	Type of fault	Conditions for fault finding	Downgraded mode after a fault is ascertained	Type of visual alert	Suspected areas Major control steps	The client effects(Symptoms) associated with the DTCs	Fault code(s) to be dealt with before working through this flow chart	Tools required
P0112	Air temperature sensor at the flow meter: Short-circuit to ground Temperature too high	str.							
P0113	Air temperature sensor at the flow meter: Short-circuit to positive or open circuit Temperature too low	str.							
P009A	Air temperature sensor at the flow meter: Calculation of the ambient air impossible	str.							

PRE-CHECK

FLOW CHART Test procedure

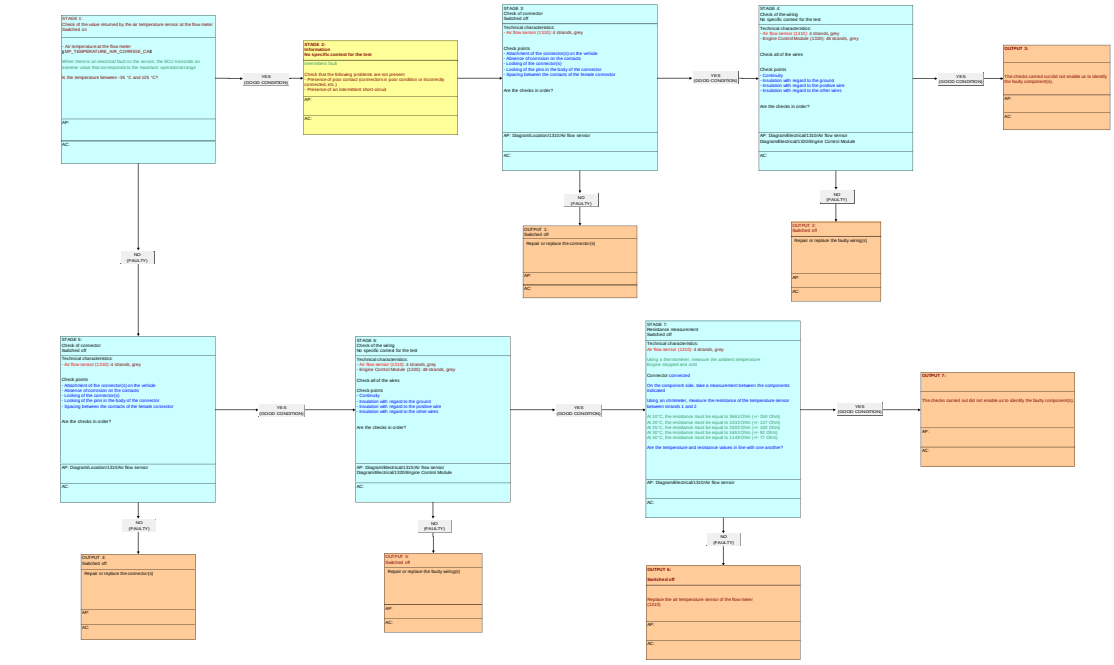

INFORMATION : FAULT CODE P0100 (ENGINE MANAGEMENT ECU)

SPECIAL FEATURE :

FOR : 1CMJ - B0FBM : DV6C TURBO DIESEL

FOR : 1PMJ - B0FBM : DV6C TURBO DIESEL

Engine ECU CONTINENTAL SID 807 branch 2	
Fault code	P0100
After sales description of the fault code	Air flow measure : Quantity of air above the maximum threshold
Description of the diagnostics	Possibility 1 For an engine speed between 2000 and 3000 rpm : Measured air flow greater than 1160 mg/stroke for 3 s
	Possibility 2 For an engine speed at 3500 rpm : Measured air flow greater than 1050 mg/stroke for 3 s
	Possibility 3 For an engine speed at 4000 rpm : Measured air flow greater than 970 mg/stroke for 3 s
	Thresholds indicated for an altitude of 0 m and an ambient temperature of 20 °C ; they are weighted according to altitude and temperature
Conditions of activation of the diagnostics	The following conditions have to be met -Engine running -Battery voltage between 8 and 16 V
Conditions of disappearance of the fault	3 drives in succession for 5 minutes with several full load accelerations for 10 seconds (Ignition off and restarting between each drive)
Down-grade modes if fault present	Closing of the EGR (exhaust gas recycling) valve
	Irreversible deactivation of the vehicle speed limiter
	Irreversible deactivation of the vehicle cruise control
	Switching of the turbocharging pressure regulation to controlled mode
	Deactivation of the request for regeneration of the particle filter from the diagnostic tool
	Sending of the information "torque uncertain" on the CAN network
Switching on of the warning lamp and/or warning message	Warning lamp MIL

Main customer complaints likely	Jerking/stalling
	Noise
	Lack of power
	Slightly higher fuel consumption
	Smoke from the exhaust
	Absence of automatic stopping of the internal combustion engine (If the vehicle has the Stop and Start system)
	Problem with automatic restarting of the internal combustion engine (If the vehicle has the Stop and Start system)
Suspect areas	Atmospheric pressure sensor in the engine management ECU
	Manifold air entry pressure sensor
	Air flow meter
	Leak between turbocharger and air mixer
	Leak between the air mixer and the engine intake (including the EGR valve take-off)
	Leak on the air mixer
	Leak on the turbocharging air cooler
	Turbocharger
	Turbocharger variable geometry control solenoid valve
	Turbocharger variable geometry position repeat sensor
	Electrical harnesses
	Connectors

Fault code(s): P0100

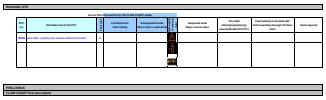

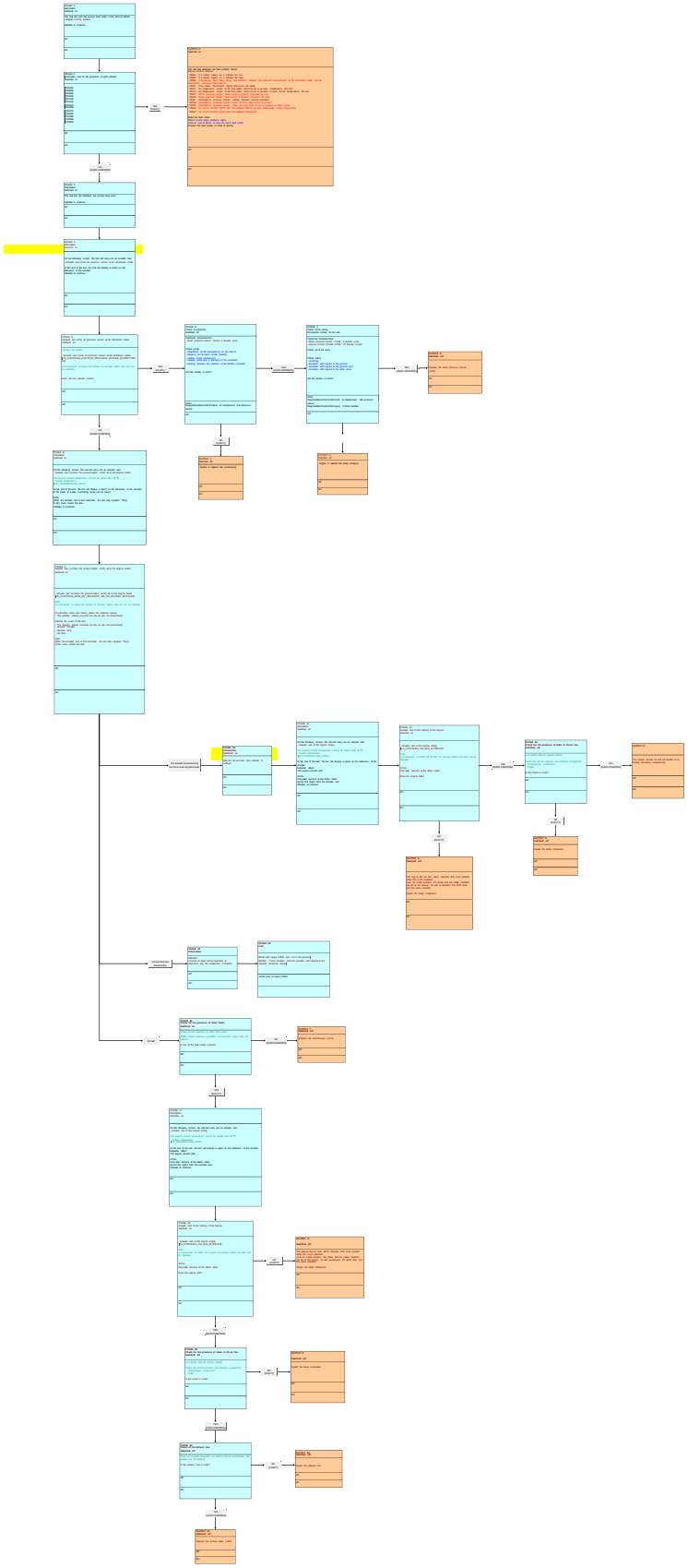

INFORMATION : FAULT CODE P0102 (ENGINE MANAGEMENT ECU)

SPECIAL FEATURE :

FOR : 1CB7 - B0FBM : DV6C TURBO DIESEL

FOR : 1CX7 - B0FBM : DV6C TURBO DIESEL

FOR : 1C58 - B0FBM : DV6C TURBO DIESEL

FOR : 1PT7 - B0FBM : DV6C TURBO DIESEL

FOR : 1PW2 - B0FBM : DV6C TURBO DIESEL

FOR : 1CB8 - B0FBM : DV6C TURBO DIESEL

FOR : 1CXA - B0FBM : DV6C TURBO DIESEL

FOR : 1CYA - B0FBM : DV6C TURBO DIESEL

FOR : 1PTB - B0FBM : DV6C TURBO DIESEL

FOR : 1PTC - B0FBM : DV6C TURBO DIESEL

FOR : 1PIA - B0FBM : DV6C TURBO DIESEL

FOR : 1PMJ - B0FBM : DV6C TURBO DIESEL

FOR : 1CMJ - B0FBM : DV6C TURBO DIESEL

Engine ECU CONTINENTAL SID 807 branch 2	
Fault code	P0102
After sales description of the fault code	Air flow measure : Signal incoherent (frequency too low)
Description of the diagnostics	Signal detected outside range for more than 80% of the time
Conditions of activation of the diagnostics	Ignition switched on
Conditions of disappearance of the fault	Driving for 5 minutes
Down-grade modes if fault present	Closing of the EGR (exhaust gas recycling) valve
	Irreversible deactivation of the vehicle speed limiter
	Irreversible deactivation of the vehicle cruise control
	Switching of the turbocharging pressure regulation to controlled mode
	Deactivation of the request for regeneration of the particle

	filter from the diagnostic tool
	Sending of the information "torque uncertain" on the CAN network
Switching on of the warning lamp and/or warning message	Warning lamp MIL
Main customer complaints likely	Smoke from the exhaust
	Noise
Suspect areas	Fuse
	Air flow meter
	Electrical harnesses
	Connectors

Fault code(s): P0102

Reminder DTC

Do not fill in this section for the FLOW CHART phase

DTC hex.	Aftersales text of the DTC	Hard type	Conditions for fault finding	Downgraded mode after a fault is ascertained	Driver action (MIL)	Suspected areas Major control steps	The client effect(s)/symptom(s) associated with the DTCs	Fault code(s) to be dealt with before working through this flow chart	Tools required
P0102	Flow meter. Inconsistent signal (frequency too weak)	ES.							
					STOP IMMEDIATELY SAFELY				

PRE-CHECK

FLOW CHART Test procedure

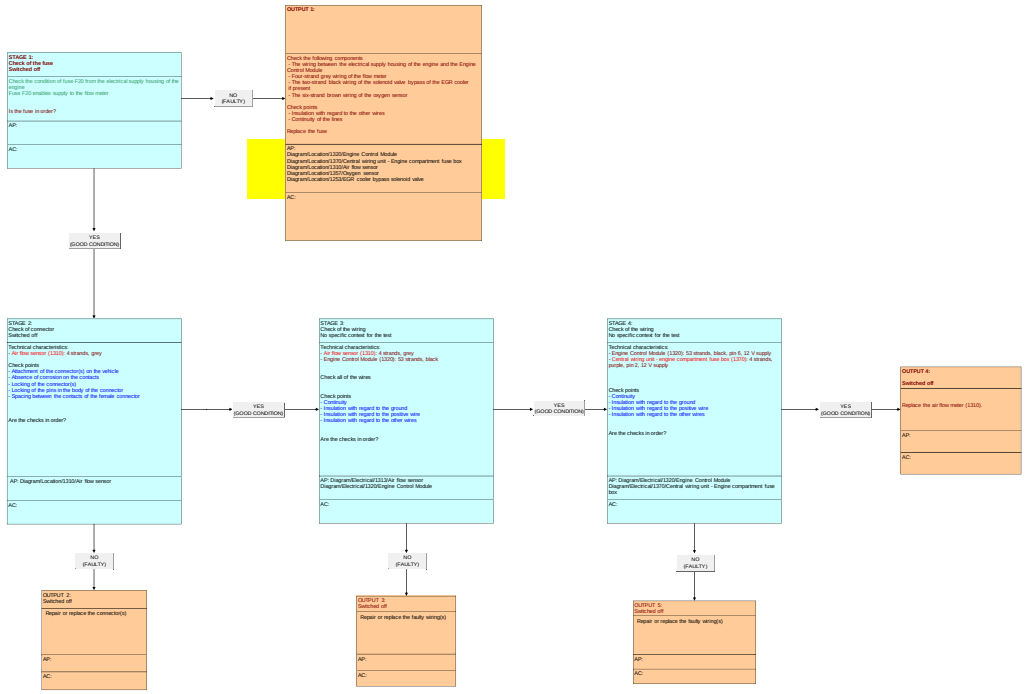

INFORMATION : FAULT CODE P0112 (ENGINE MANAGEMENT ECU)

SPECIAL FEATURE :

FOR : 1CB7 - B0FBM : DV6C TURBO DIESEL

FOR : 1CX7 - B0FBM : DV6C TURBO DIESEL

FOR : 1C58 - B0FBM : DV6C TURBO DIESEL

FOR : 1PT7 - B0FBM : DV6C TURBO DIESEL

FOR : 1PW2 - B0FBM : DV6C TURBO DIESEL

FOR : 1CB8 - B0FBM : DV6C TURBO DIESEL

FOR : 1CXA - B0FBM : DV6C TURBO DIESEL

FOR : 1CYA - B0FBM : DV6C TURBO DIESEL

FOR : 1PTB - B0FBM : DV6C TURBO DIESEL

FOR : 1PTC - B0FBM : DV6C TURBO DIESEL

FOR : 1PIA - B0FBM : DV6C TURBO DIESEL

FOR : 1PMJ - B0FBM : DV6C TURBO DIESEL

FOR : 1CMJ - B0FBM : DV6C TURBO DIESEL

Engine ECU CONTINENTAL SID 807 branch 2	
Fault code	P0112
After sales description of the fault code	Measurement of the air temperature at the air flow sensor : Short circuit to earth : Temperature too high
Description of the diagnostics	Voltage lower than 100 mV for 1 s
Conditions of activation of the diagnostics	Ignition switched on
Conditions of disappearance of the fault	Driving for 5 minutes
Down-grade modes if fault present	Closing of the EGR (exhaust gas recycling) valve
	Reversible deactivation of the vehicle speed limiter
	Reversible deactivation of the vehicle cruise control
	Switching of the turbocharging pressure regulation to controlled mode
	Sending of the information "torque uncertain" on the CAN

	network
	For a gearbox with engine speed regulation (automatic gearbox or piloted manual gearbox), limitation of the torque sent to the gearbox
Switching on of the warning lamp and/or warning message	Warning lamp MIL
Main customer complaints likely	Slightly higher fuel consumption
	Smoke from the exhaust
	Absence of automatic stopping of the internal combustion engine (If the vehicle has the Stop and Start system)
Suspect areas	Air temperature sensor at the air flowmeter
	Electrical harness
	Connectors

Fault code(s): P0112 or P0113 or P009A

Reminder DTC

Do not fill in this section for the FLOW CHART phase

DTC no.	Alternate text of the DTC	Sub-sys.	Conditions for fault finding	Downgraded mode after a fault is ascertained	Driver assistance visual signal	Suspected areas Major control steps	The client effects(Agreements) associated with the DTCs	Fault code(s) to be dealt with before working through this flow chart	Tools required
P0112	Air temperature sensor at the flow meter: Short-circuit to ground Temperature too high	03							
P0113	Air temperature sensor at the flow meter: Short-circuit to positive or open circuit Temperature too low	03							
P009A	Air temperature sensor at the flow meter: Calculation of the ambient air impossible	03							

PRE-CHECK

FLOW CHART Test procedure

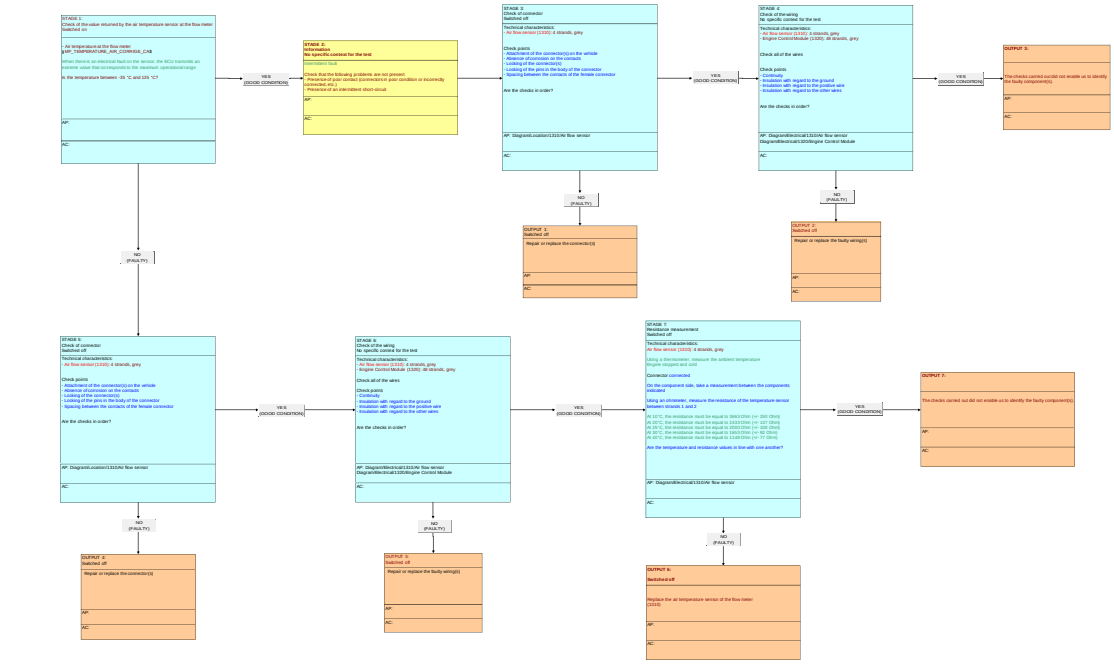

INFORMATION : FAULT CODE P0113 (ENGINE MANAGEMENT ECU)

SPECIAL FEATURE :

FOR : 1CB7 - B0FBM : DV6C TURBO DIESEL

FOR : 1CX7 - B0FBM : DV6C TURBO DIESEL

FOR : 1C58 - B0FBM : DV6C TURBO DIESEL

FOR : 1PT7 - B0FBM : DV6C TURBO DIESEL

FOR : 1PW2 - B0FBM : DV6C TURBO DIESEL

FOR : 1CB8 - B0FBM : DV6C TURBO DIESEL

FOR : 1CXA - B0FBM : DV6C TURBO DIESEL

FOR : 1CYA - B0FBM : DV6C TURBO DIESEL

FOR : 1PTB - B0FBM : DV6C TURBO DIESEL

FOR : 1PTC - B0FBM : DV6C TURBO DIESEL

FOR : 1PIA - B0FBM : DV6C TURBO DIESEL

FOR : 1PMJ - B0FBM : DV6C TURBO DIESEL

FOR : 1CMJ - B0FBM : DV6C TURBO DIESEL

Engine ECU CONTINENTAL SID 807 branch 2	
Fault code	P0113
After sales description of the fault code	Measurement of the air temperature at the air flow sensor : Short circuit to positive or open circuit : Temperature too low
Description of the diagnostics	Voltage higher than 4,9 V for 1 seconds
Conditions of activation of the diagnostics	Ignition switched on
Conditions of disappearance of the fault	Driving for 5 minutes
Down-grade modes if fault present	Closing of the EGR (exhaust gas recycling) valve
	Reversible deactivation of the vehicle speed limiter
	Reversible deactivation of the vehicle cruise control
	Switching of the turbocharging pressure regulation to controlled mode
	Sending of the information "torque uncertain" on the CAN

	network
	For a gearbox with engine speed regulation (automatic gearbox or piloted manual gearbox), limitation of the torque sent to the gearbox
Switching on of the warning lamp and/or warning message	Warning lamp MIL
Main customer complaints likely	Slightly higher fuel consumption
	Smoke from the exhaust
	Absence of automatic stopping of the internal combustion engine (If the vehicle has the Stop and Start system)
Suspect areas	Air temperature sensor at the air flowmeter
	Electrical harness
	Connectors

Fault code(s): P0112 or P0113 or P009A

Reminder DTC

Do not fill in this section for the FLOW CHART phase

DTC no.	Alternate text of the DTC	Lamp type	Conditions for fault finding	Downgraded mode after a fault is ascertained	Driver assist warning light	Suspected areas Major control steps	The client effects(Unpleasant) associated with the DTCs	Fault code(s) to be dealt with before working through this flow chart	Tools required
P0112	Air temperature sensor at the flow meter: Short-circuit to ground Temperature too high	MI							
P0113	Air temperature sensor at the flow meter: Short-circuit to positive or open circuit Temperature too low	MI							
P009A	Air temperature sensor at the flow meter: Calculation of the ambient air impossible	MI							

PRE-CHECK

FLOW CHART Test procedure

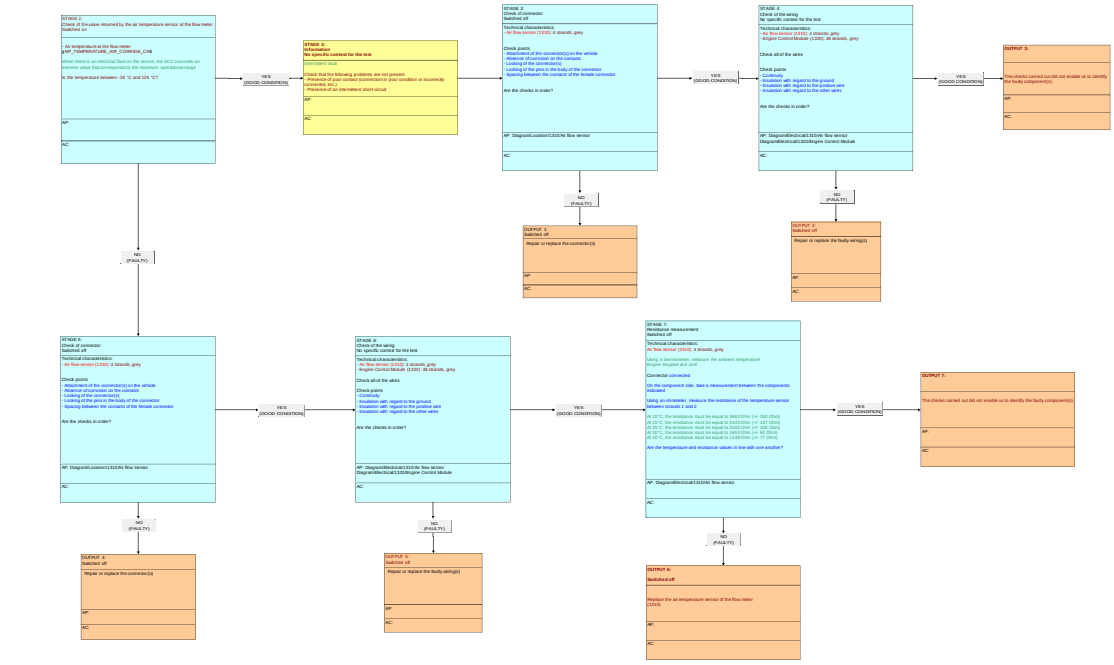

INFORMATION : FAULT CODE P0115 (ENGINE MANAGEMENT ECU)

SPECIAL FEATURE :

FOR : 1CB7 - B0FBM : DV6C TURBO DIESEL

FOR : 1CX7 - B0FBM : DV6C TURBO DIESEL

FOR : 1C58 - B0FBM : DV6C TURBO DIESEL

FOR : 1PT7 - B0FBM : DV6C TURBO DIESEL

FOR : 1PW2 - B0FBM : DV6C TURBO DIESEL

FOR : 1CB8 - B0FBM : DV6C TURBO DIESEL

FOR : 1CXA - B0FBM : DV6C TURBO DIESEL

FOR : 1CYA - B0FBM : DV6C TURBO DIESEL

FOR : 1PTB - B0FBM : DV6C TURBO DIESEL

FOR : 1PTC - B0FBM : DV6C TURBO DIESEL

FOR : 1PIA - B0FBM : DV6C TURBO DIESEL

FOR : 1PMJ - B0FBM : DV6C TURBO DIESEL

FOR : 1CMJ - B0FBM : DV6C TURBO DIESEL

Engine ECU CONTINENTAL SID 807 branch 2	
Fault code	P0115
After sales description of the fault code	Engine water temperature measure : Temperature rise test
Description of the diagnostics	Increase in the engine coolant temperature less than 5 °C during a total of 160 seconds
Conditions of activation of the diagnostics	When the engine is started, the coolant temperature should be lower than 30 °C. Once the engine has been started, this should have a load higher than 80 Nm and an engine speed higher than 1000 rpm during a total of 160 seconds
Conditions of disappearance of the fault	A start from engine cold and driving for 10 minutes
	Activation of the cooling fan at fast speed
	Closing of the EGR (exhaust gas recycling) valve
	Irreversible deactivation of the vehicle speed limiter
	Irreversible deactivation of the vehicle cruise control

Down-grade modes if fault present	Request for immediate declutching of the air conditioning compressor
	Switching of the turbocharging pressure regulation to controlled mode
	Deactivation of the request for regeneration of the particle filter from the diagnostic tool
	Sending of the information "torque uncertain" on the CAN network
	For a gearbox with engine speed regulation (automatic gearbox or piloted manual gearbox), limitation of the torque sent to the gearbox
Switching on of the warning lamp and/or warning message	Warning lamp MIL
Main customer complaints likely	Slightly higher fuel consumption
	Lack of power
	Engine overheating with illumination of the engine coolant temperature indicator light
	Unwanted triggering of the fan assemblies
	Noise
	Absence of automatic stopping of the internal combustion engine (If the vehicle has the Stop and Start system)
Suspect areas	Coolant temperature sensor
	Electrical harness
	Connectors

Fault code(s): P0115 or P0117 or P0118

Remember DTC

DTC no.	Alternative level of the DTC	Priority level	Conditions for fault finding	Warning/symptom/error after a fault is encountered	Fault code	Suspected area Major control steps	The client effects(s)/symptom(s) associated with the DTC(s)	Fault code(s) to be dealt with before working through this flow chart	Tools required
P0115	Engine coolant temperature sensor: Temperature too low	06							
P0117	Engine coolant temperature sensor: Short circuit to ground / Value too high	06							
P0118	Engine coolant temperature sensor: Short circuit to positive or open circuit / Value too low	05							

FINE CHECK

FLOW CHART Test procedure

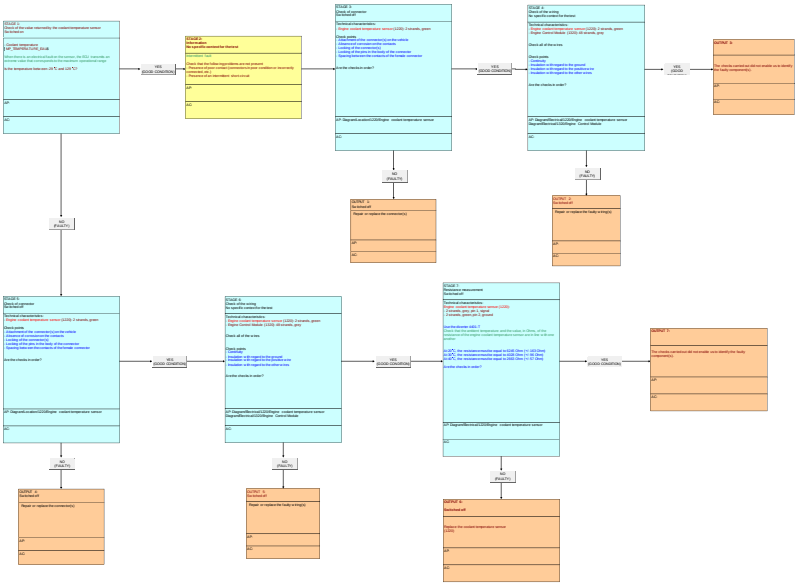

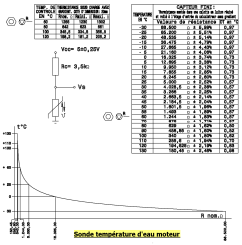

Sonde température d'eau moteur

INFORMATION : FAULT CODE P0117 (ENGINE MANAGEMENT ECU)

SPECIAL FEATURE :

FOR : 1CB7 - B0FBM : DV6C TURBO DIESEL

FOR : 1CX7 - B0FBM : DV6C TURBO DIESEL

FOR : 1C58 - B0FBM : DV6C TURBO DIESEL

FOR : 1PT7 - B0FBM : DV6C TURBO DIESEL

FOR : 1PW2 - B0FBM : DV6C TURBO DIESEL

FOR : 1CB8 - B0FBM : DV6C TURBO DIESEL

FOR : 1CXA - B0FBM : DV6C TURBO DIESEL

FOR : 1CYA - B0FBM : DV6C TURBO DIESEL

FOR : 1PTB - B0FBM : DV6C TURBO DIESEL

FOR : 1PTC - B0FBM : DV6C TURBO DIESEL

FOR : 1PIA - B0FBM : DV6C TURBO DIESEL

FOR : 1PMJ - B0FBM : DV6C TURBO DIESEL

FOR : 1CMJ - B0FBM : DV6C TURBO DIESEL

Engine ECU CONTINENTAL SID 807 branch 2	
Fault code	P0117
After sales description of the fault code	Engine water temperature measure : Short circuit to earth : Value too high
Description of the diagnostics	Voltage lower than 100 mV for 5 s
Conditions of activation of the diagnostics	Ignition switched on
Conditions of disappearance of the fault	Driving for 5 minutes
	Activation of the cooling fan at fast speed
	Closing of the EGR (exhaust gas recycling) valve
	Irreversible deactivation of the vehicle speed limiter
	Irreversible deactivation of the vehicle cruise control
	Request for immediate declutching of the air conditioning compressor

Down-grade modes if fault present	Switching of the turbocharging pressure regulation to controlled mode
	Deactivation of the request for regeneration of the particle filter from the diagnostic tool
	Sending of the information "torque uncertain" on the CAN network
	For a gearbox with engine speed regulation (automatic gearbox or piloted manual gearbox), limitation of the torque sent to the gearbox
	Automatic restarting impossible following stopping of the engine (Requires restarting of the engine using the ignition key)
Switching on of the warning lamp and/or warning message	Warning lamp MIL
Main customer complaints likely	Engine overheating with illumination of the engine coolant temperature indicator light
	Fluid leak/smells (diesel fuel, oil, etc.)
	Lack of power
	Jerking/stalling
	Noise
Suspect areas	Coolant temperature sensor
	Electrical harness
	Connectors
	Coolant pump leak
	Coolant pump broken (Coolant feed section)
	Thermostat

Fault code(s): P0115 or P0117 or P0118

Remember DTC

DTC no.	Alternative level of the DTC	Priority	Conditions for fault finding	Warning/symptom/error after a fault is encountered	Fault present	Suspected area: Major common steps	The client effects(s)/symptom(s) associated with the DTC(s)	Check route(s) to be dealt with before working through this flow chart:	Tools required
P0115	Engine coolant temperature sensor: Temperature too low	(a)							
P0117	Engine coolant temperature sensor: Short circuit to ground / Value too high	(a)							
P0118	Engine coolant temperature sensor: Short circuit to positive or open circuit / Value too low	(a)							

FIRM CHECK

FLOW CHART Test procedure

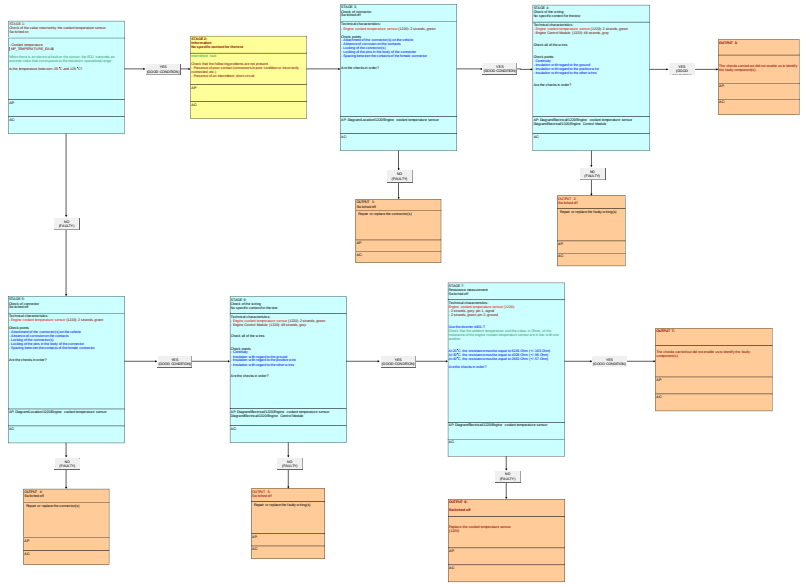

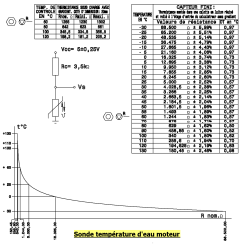

Sonde température d'eau moteur

INFORMATION : FAULT CODE P0118 (ENGINE MANAGEMENT ECU)

SPECIAL FEATURE :

FOR : 1CB7 - B0FBM : DV6C TURBO DIESEL

FOR : 1CX7 - B0FBM : DV6C TURBO DIESEL

FOR : 1C58 - B0FBM : DV6C TURBO DIESEL

FOR : 1PT7 - B0FBM : DV6C TURBO DIESEL

FOR : 1PW2 - B0FBM : DV6C TURBO DIESEL

FOR : 1CB8 - B0FBM : DV6C TURBO DIESEL

FOR : 1CXA - B0FBM : DV6C TURBO DIESEL

FOR : 1CYA - B0FBM : DV6C TURBO DIESEL

FOR : 1PTB - B0FBM : DV6C TURBO DIESEL

FOR : 1PTC - B0FBM : DV6C TURBO DIESEL

FOR : 1PIA - B0FBM : DV6C TURBO DIESEL

FOR : 1PMJ - B0FBM : DV6C TURBO DIESEL

FOR : 1CMJ - B0FBM : DV6C TURBO DIESEL

Engine ECU CONTINENTAL SID 807 branch 2	
Fault code	P0118
After sales description of the fault code	Engine water temperature measure : Short circuit to positive or open circuit : Value too low
Description of the diagnostics	Voltage higher than 4,9 V for 5 seconds
Conditions of activation of the diagnostics	Ignition switched on
Conditions of disappearance of the fault	Driving for 5 minutes
	Activation of the cooling fan at fast speed
	Closing of the EGR (exhaust gas recycling) valve
	Irreversible deactivation of the vehicle speed limiter
	Irreversible deactivation of the vehicle cruise control
	Request for immediate declutching of the air conditioning compressor

Down-grade modes if fault present	Switching of the turbocharging pressure regulation to controlled mode
	Deactivation of the request for regeneration of the particle filter from the diagnostic tool
	Sending of the information "torque uncertain" on the CAN network
	For a gearbox with engine speed regulation (automatic gearbox or piloted manual gearbox), limitation of the torque sent to the gearbox
	Automatic restarting impossible following stopping of the engine (Requires restarting of the engine using the ignition key)
Switching on of the warning lamp and/or warning message	Warning lamp MIL
Main customer complaints likely	Slightly higher fuel consumption
	Engine overheating with illumination of the engine coolant temperature indicator light
	Lack of power
	Jerking/stalling
	Noise
Suspect areas	Coolant temperature sensor
	Electrical harness
	Connectors

Fault code(s): P0115 or P0117 or P0118

Remember DTC

Do not fail to follow instruction the FLOW CHART phase

DTC num	Alternative level of the DTC	Priority level	Conditions for fault finding	Warning/symptom/ error after a fault is ascertained	Type of fault	Suspected areas Major common steps	The client effects(s)/symptom(s) associated with the DTC	Fault analysis(s) to be dealt with before working through this flow chart	Tools required
P0115	Engine coolant temperature sensor: Temperature too low	06							
P0117	Engine coolant temperature sensor: Short circuit to ground / value too high	06							
P0118	Engine coolant temperature sensor: Short circuit to positive or open circuit / value too low	05							

FIRM CHECK

FLOW CHART Third presentation

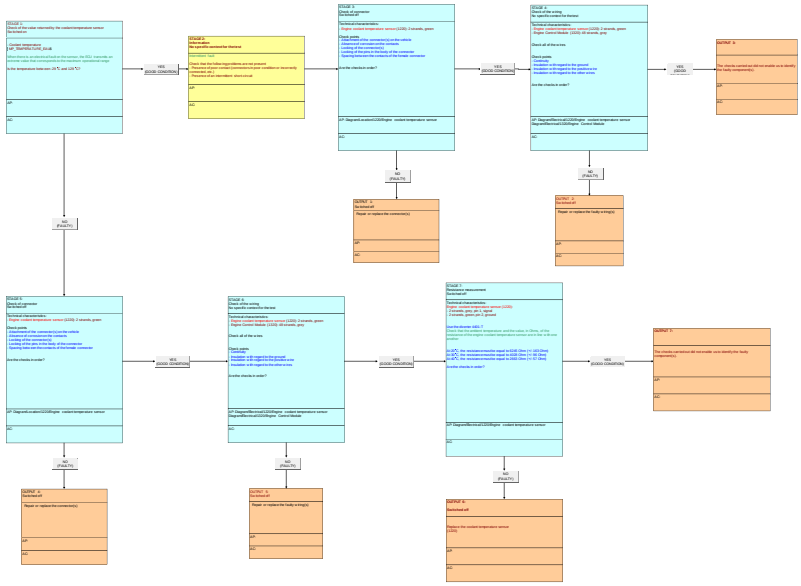

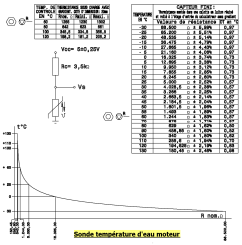

Sonde température d'eau moteur

INFORMATION : FAULT CODE P0130 (ENGINE MANAGEMENT ECU)

SPECIAL FEATURE :

FOR : 1CB7 - B0FBM : DV6C TURBO DIESEL

FOR : 1CB8 - B0FBM : DV6C TURBO DIESEL

FOR : 1CXA - B0FBM : DV6C TURBO DIESEL

FOR : 1CX7 - B0FBM : DV6C TURBO DIESEL

FOR : 1CYA - B0FBM : DV6C TURBO DIESEL

FOR : 1C58 - B0FBM : DV6C TURBO DIESEL

FOR : 1PIA - B0FBM : DV6C TURBO DIESEL

FOR : 1PTB - B0FBM : DV6C TURBO DIESEL

FOR : 1PTC - B0FBM : DV6C TURBO DIESEL

FOR : 1PT7 - B0FBM : DV6C TURBO DIESEL

FOR : 1PW2 - B0FBM : DV6C TURBO DIESEL

FOR : 1CMJ - B0FBM : DV6C TURBO DIESEL

FOR : 1PMJ - B0FBM : DV6C TURBO DIESEL

Engine ECU CONTINENTAL SID 807 branch 2	
Fault code	P0130
After sales description of the fault code	Measurement of the concentration of oxygen : Open circuit on one of the pins of the sensor (not heating)
Description of the diagnostics	Electrical fault detected for 500 ms
Conditions of activation of the diagnostics	Ignition switched on
Conditions of disappearance of the fault	Driving for 5 minutes
Down-grade modes if fault present	-
Switching on of the warning lamp and/or warning message	-
Main customer complaints likely	Slightly higher fuel consumption
	Oxygen sensor

Suspect areas	Fuse
	Electrical harness
	Connectors

Fault code(s): P0130 or P0131 or P0132 or P2244

Reminder DTC

Do not fill in this section for the FLOW CHART phase

DTC no.	Alternates text of the DTC	Fault type	Conditions for fault finding	Downgraded mode after a fault is ascertained	Driver warning lamp	Suspected zones Major control steps	The client effect(Symptom(s)) associated with the DTC's	Fault code(s) to be dealt with before working through this flow chart	Tools required
P0130	Upstream oxygen sensor: Open circuit on one of the sensor pins (including heating)	xxx							
P0131	Upstream oxygen sensor: Short-circuit to ground	xxx							
P0132	Upstream oxygen sensor: Short-circuit to positive	xxx							
P2244	Upstream oxygen sensor: Integrated circuit (Engine Control Module) for processing of the signal of the faulty sensor	xxx							

PRE-CHECK
FLOW CHART Test procedure

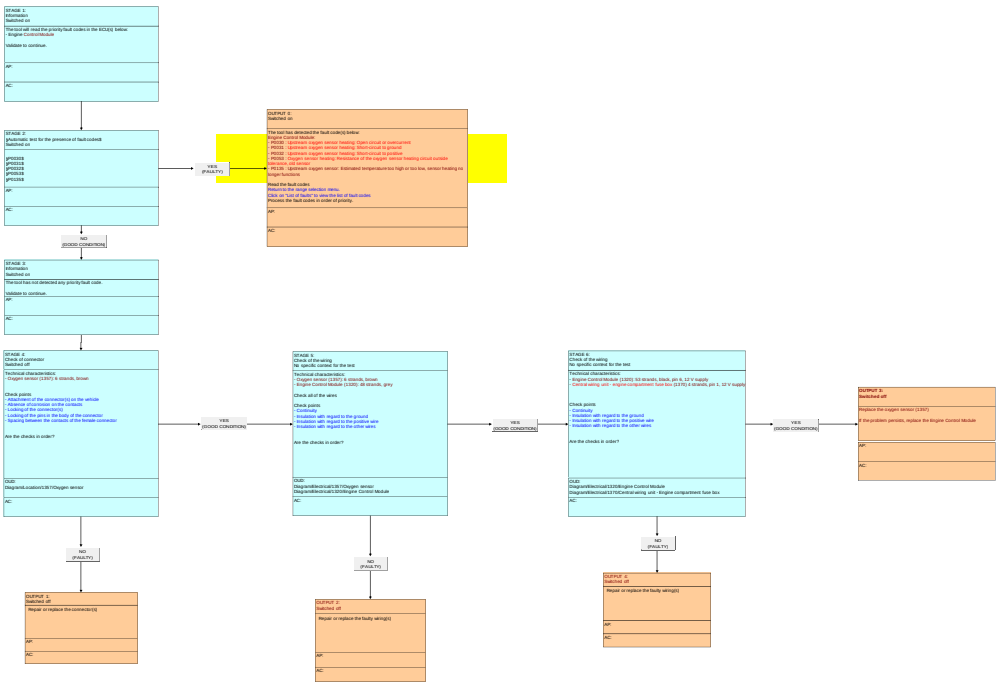

INFORMATION : FAULT CODE P0131 (ENGINE MANAGEMENT ECU)

SPECIAL FEATURE :

FOR : 1CB7 - B0FBM : DV6C TURBO DIESEL

FOR : 1CB8 - B0FBM : DV6C TURBO DIESEL

FOR : 1CXA - B0FBM : DV6C TURBO DIESEL

FOR : 1CX7 - B0FBM : DV6C TURBO DIESEL

FOR : 1CYA - B0FBM : DV6C TURBO DIESEL

FOR : 1C58 - B0FBM : DV6C TURBO DIESEL

FOR : 1PIA - B0FBM : DV6C TURBO DIESEL

FOR : 1PTB - B0FBM : DV6C TURBO DIESEL

FOR : 1PTC - B0FBM : DV6C TURBO DIESEL

FOR : 1PT7 - B0FBM : DV6C TURBO DIESEL

FOR : 1PW2 - B0FBM : DV6C TURBO DIESEL

FOR : 1CMJ - B0FBM : DV6C TURBO DIESEL

FOR : 1PMJ - B0FBM : DV6C TURBO DIESEL

Engine ECU CONTINENTAL SID 807 branch 2	
Fault code	P0131
After sales description of the fault code	Measurement of the concentration of oxygen : Short circuit to earth
Description of the diagnostics	Electrical fault detected for 500 ms
Conditions of activation of the diagnostics	Ignition switched on
Conditions of disappearance of the fault	Driving for 5 minutes
Down-grade modes if fault present	-
Switching on of the warning lamp and/or warning message	-

Main customer complaints likely	Slightly higher fuel consumption
Suspect areas	Oxygen sensor
	Electrical harness
	Connectors

Fault code(s): P0130 or P0131 or P0132 or P2244

Reminder DTC

Do not fill in this section for the FLOW CHART phase

DTC no.	Alternates text of the DTC	Fault type	Conditions for fault finding	Downgraded mode after a fault is ascertained	Driver alert lamp (if any)	Suspected areas Major control steps	The client effect(Symptom(s)) associated with the DTC's	Fault code(s) to be dealt with before working through this flow chart	Tools required
P0130	Upstream oxygen sensor: Open circuit on one of the sensor pins (including heating)	Hit							
P0131	Upstream oxygen sensor: Short-circuit to ground	Hit							
P0132	Upstream oxygen sensor: Short-circuit to positive	Hit							
P2244	Upstream oxygen sensor: Integrated circuit (Engine Control Module) for processing of the signal of the faulty sensor	Hit							

PRE-CHECK
FLOW CHART Test procedure

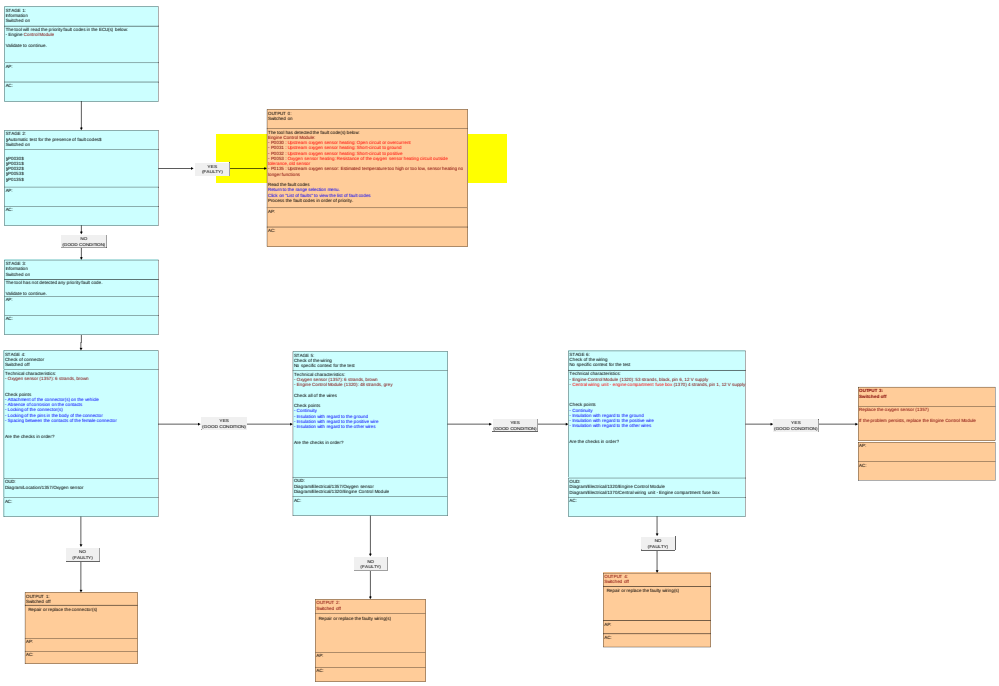

INFORMATION : FAULT CODE P0132 (ENGINE MANAGEMENT ECU)

SPECIAL FEATURE :

FOR : 1CB7 - B0FBM : DV6C TURBO DIESEL

FOR : 1CB8 - B0FBM : DV6C TURBO DIESEL

FOR : 1CXA - B0FBM : DV6C TURBO DIESEL

FOR : 1CX7 - B0FBM : DV6C TURBO DIESEL

FOR : 1CYA - B0FBM : DV6C TURBO DIESEL

FOR : 1C58 - B0FBM : DV6C TURBO DIESEL

FOR : 1PIA - B0FBM : DV6C TURBO DIESEL

FOR : 1PTB - B0FBM : DV6C TURBO DIESEL

FOR : 1PTC - B0FBM : DV6C TURBO DIESEL

FOR : 1PT7 - B0FBM : DV6C TURBO DIESEL

FOR : 1PW2 - B0FBM : DV6C TURBO DIESEL

FOR : 1CMJ - B0FBM : DV6C TURBO DIESEL

FOR : 1PMJ - B0FBM : DV6C TURBO DIESEL

Engine ECU CONTINENTAL SID 807 branch 2	
Fault code	P0132
After sales description of the fault code	Measurement of the concentration of oxygen : Short circuit to positive
Description of the diagnostics	Electrical fault detected for 500 ms
Conditions of activation of the diagnostics	Ignition switched on
Conditions of disappearance of the fault	Driving for 5 minutes
Down-grade modes if fault present	-
Switching on of the warning lamp and/or warning message	-

Main customer complaints likely	Slightly higher fuel consumption
Suspect areas	Oxygen sensor
	Electrical harness
	Connectors

Fault code(s): P0130 or P0131 or P0132 or P2244

Reminder DTC

Do not fill in this section for the FLOW CHART phase

DTC no.	Alternates text of the DTC	Fault type	Conditions for fault finding	Downgraded mode after a fault is ascertained	Driver alert lamp	Suspected zones Major control steps	The client effect(Symptom(s)) associated with the DTC	Fault code(s) to be dealt with before working through this flow chart	Tools required
P0130	Upstream oxygen sensor: Open circuit on one of the sensor pins (including heating)	0x1							
P0131	Upstream oxygen sensor: Short-circuit to ground	0x2							
P0132	Upstream oxygen sensor: Short-circuit to positive	0x3							
P2244	Upstream oxygen sensor: Integrated circuit (Engine Control Module) for processing of the signal of the faulty sensor	0x4							

PRE-CHECK
FLOW CHART Test procedure

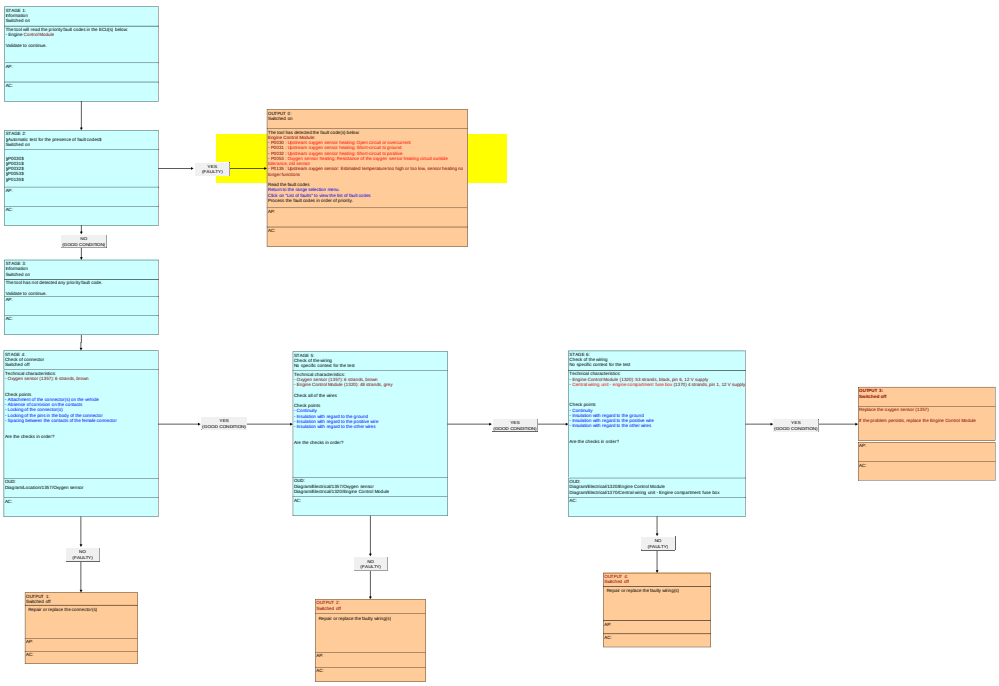

INFORMATION : FAULT CODE P0135 (ENGINE MANAGEMENT ECU)

SPECIAL FEATURE :

FOR : 1CB7 - B0FBM

FOR : 1CB8 - B0FBM

FOR : 1CXA - B0FBM

FOR : 1CX7 - B0FBM

FOR : 1CYA - B0FBM

FOR : 1C58 - B0FBM

FOR : 1PIA - B0FBM

FOR : 1PTB - B0FBM

FOR : 1PTC - B0FBM

FOR : 1PT7 - B0FBM

FOR : 1PW2 - B0FBM

FOR : 1CMJ - B0FBM

FOR : 1PMJ - B0FBM

Engine ECU CONTINENTAL SID 807 branch 2	
Fault code	P0135
After sales description of the fault code	Oxygen sensor heating : Estimated temperature too high or too low, sensor heating no longer working
Description of the diagnostics	Electrical fault detected for 500 ms
Conditions of activation of the diagnostics	Ignition switched on
Conditions of disappearance of the fault	Driving for 5 minutes
Down-grade modes if fault present	-
Switching on of the warning lamp and/or warning message	Engine diagnosis warning lamp
Main customer complaints likely	Slightly higher fuel consumption
Suspect areas	Oxygen sensor
	Electrical harness
	Connectors

Fault code(s): P0030 or P0031 or P0032 or P0053 or P0135

Reminder DTC

Do not fill in this section for the FLOW CHART phase

DTC no.	Alternative text of the DTC	Fault type	Conditions for fault finding	Downgraded mode after a fault is memorised	Driving safety risk	Suspected areas Major control steps	The client offers(highlighted) associated with the DTC's	Fault code(s) to be dealt with before working through this flow chart	Tools required
P0030	Upstream oxygen sensor heating: Open circuit or overcurrent	0A							
P0031	Upstream oxygen sensor heating: Short circuit to ground	0A							
P0032	Upstream oxygen sensor heating: Short circuit to positive	0A							
P0053	Upstream oxygen sensor heating: Resistance of the oxygen sensor heating circuit outside tolerance, old sensor	0A							
P0135	Upstream oxygen sensor: Estimated temperature too high or too low, sensor heating no longer functions	0A							

PRE-CHECK

FLOW CHART Test procedure

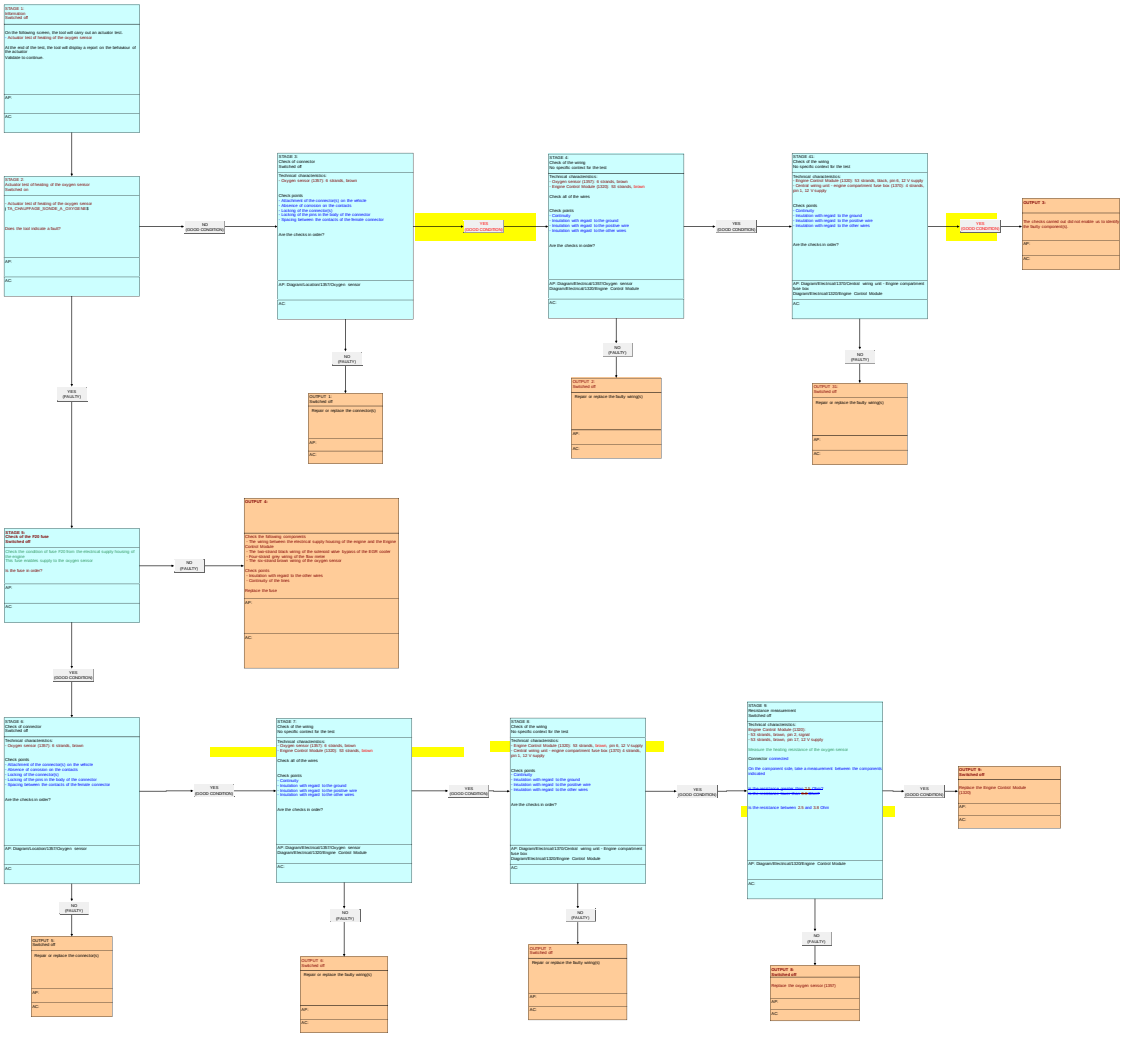

INFORMATION : FAULT CODE P0182 (ENGINE MANAGEMENT ECU)

SPECIAL FEATURE :

FOR : 1CB7 - B0FBM : DV6C TURBO DIESEL

FOR : 1CX7 - B0FBM : DV6C TURBO DIESEL

FOR : 1C58 - B0FBM : DV6C TURBO DIESEL

FOR : 1PT7 - B0FBM : DV6C TURBO DIESEL

FOR : 1PW2 - B0FBM : DV6C TURBO DIESEL

FOR : 1CB8 - B0FBM : DV6C TURBO DIESEL

FOR : 1CXA - B0FBM : DV6C TURBO DIESEL

FOR : 1CYA - B0FBM : DV6C TURBO DIESEL

FOR : 1PTB - B0FBM : DV6C TURBO DIESEL

FOR : 1PTC - B0FBM : DV6C TURBO DIESEL

FOR : 1PIA - B0FBM : DV6C TURBO DIESEL

FOR : 1CMJ - B0FBM : DV6C TURBO DIESEL

FOR : 1PMJ - B0FBM : DV6C TURBO DIESEL

Engine ECU CONTINENTAL SID 807 branch 2	
Fault code	P0182
After sales description of the fault code	Fuel temperature measure : Short circuit to earth : Value too high
Description of the diagnostics	Voltage lower than 200 mV for 1 s
Conditions of activation of the diagnostics	Ignition switched on
Conditions of disappearance of the fault	Driving for 5 minutes
Down-grade modes if fault present	-
Switching on of the warning lamp and/or warning message	-

Main customer complaints likely	Jerking/stalling
	Lack of power
	Absence of automatic stopping of the internal combustion engine (If the vehicle has the Stop and Start system)
Suspect areas	Fuel temperature sensor
	Electrical harness
	Connectors

Fault code(s): P0182 or P0183

Reminder DTC

Do not fill in this section for the FLOW CHART phase

DTC no.	Aftersales text of the DTC	Fault type	Conditions for fault finding	Downgraded mode after a fault is ascertained	Immediate loss of vehicle driveability	Suspected areas Major control steps	The client effect(s)/symptom(s) associated with the DTCs	Fault code(s) to be dealt with before working through this flow chart	Tools required
P0182	Diesel temperature sensor: Short-circuit to ground: Value too high	EE							
P0183	Diesel temperature sensor: Short-circuit to positive or open circuit: Value too low	EE							

PRE-CHECK

FLOW CHART Test procedure

STAGE 1:
Check of connector
Switched off

Technical characteristics:
- Fuel temperature sensor (1221): 2 strands, grey

Check points
- Attachment of the connector(s) on the vehicle
- Absence of corrosion on the contacts
- Locking of the connector(s)
- Locking of the pins in the body of the connector
- Spacing between the contacts of the female connector

Are the checks in order?

AP: Diagram/Location/1221/Fuel temperature sensor

AC:

NO (FAULTY)

OUTPUT 1:
Switched off

Repair or replace the connector(s)

AP:

AC:

YES (GOOD CONDITION)

STAGE 2:
Check of the wiring
No specific context for the test

Technical characteristics:
- Fuel temperature sensor (1221): 2 strands, grey
- Engine Control Module (1320): 53 strands, brown

Check all of the wires

Check points
- Continuity
- Insulation with regard to the ground
- Insulation with regard to the positive wire
- Insulation with regard to the other wires

Are the checks in order?

AP: Diagram/Electrical/1221/Fuel temperature sensor
Diagram/Electrical/1320/Engine Control Module

AC:

NO (FAULTY)

OUTPUT 2:
Switched off

Repair or replace the faulty wiring(s)

AP:

AC:

YES (GOOD CONDITION)

STAGE 3:
Resistance measurement
Switched off

Technical characteristics:
Engine Control Module (1320):
- 53 strands, brown, pin 45, ground
- 53 strands, brown, pin 20, signal

Using a thermometer, measure the ambient temperature

Use the diverter 4401-T
Using an ohmmeter, measure the resistance of the temperature sensor between strands 1 and 2

Check that the ambient temperature and the value, in Ohms, of the resistance of the fuel temperature sensor are in line with one another

At 20°C, the resistance must be equal to 3033 Ohm (+/- 290 Ohm)
At 40°C, the resistance must be equal to 1240 Ohm (+/- 100 Ohm)

Are the checks in order?

AP: Diagram/Electrical/1221/Fuel temperature sensor
Diagram/Electrical/1320/Engine Control Module

AC:

NO (FAULTY)

OUTPUT 3:
Switched off

Replace the diesel temperature sensor (1221)

AP: Diagram/Location/1221/Fuel temperature sensor

AC:

YES (GOOD CONDITION)

OUTPUT 4:

The checks carried out did not enable us to identify the faulty component(s).

AP:

AC:

TEMPERATURE EN°C	VALEURS CAPTEUR R MINI	R MAXI
- 40	79000,06	109535,40
- 30	41254,99	55558,92
- 20	22384,34	29458,67
0	7351,14	9247,9
+ 20	2742,72	3323,48
+ 40	1141,48	1338,74
+ 80	222,58	295,19
+ 90	209,21	267,99
+100	136,1	149,99
+120	77,96	83,65
+130	69	84

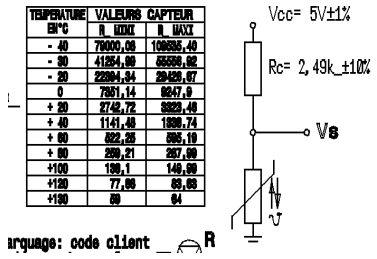

INFORMATION : FAULT CODE P0183 (ENGINE MANAGEMENT ECU)

SPECIAL FEATURE :

FOR : 1CB7 - B0FBM : DV6C TURBO DIESEL

FOR : 1CX7 - B0FBM : DV6C TURBO DIESEL

FOR : 1C58 - B0FBM : DV6C TURBO DIESEL

FOR : 1PT7 - B0FBM : DV6C TURBO DIESEL

FOR : 1PW2 - B0FBM : DV6C TURBO DIESEL

FOR : 1CB8 - B0FBM : DV6C TURBO DIESEL

FOR : 1CXA - B0FBM : DV6C TURBO DIESEL

FOR : 1CYA - B0FBM : DV6C TURBO DIESEL

FOR : 1PTB - B0FBM : DV6C TURBO DIESEL

FOR : 1PTC - B0FBM : DV6C TURBO DIESEL

FOR : 1PIA - B0FBM : DV6C TURBO DIESEL

FOR : 1CMJ - B0FBM : DV6C TURBO DIESEL

FOR : 1PMJ - B0FBM : DV6C TURBO DIESEL

Engine ECU CONTINENTAL SID 807 branch 2	
Fault code	P0183
After sales description of the fault code	Fuel temperature measure : Short circuit to positive or open circuit : Value too low
Description of the diagnostics	Voltage higher than 4,9 V for 1 seconds
Conditions of activation of the diagnostics	Ignition switched on
Conditions of disappearance of the fault	Driving for 5 minutes
Down-grade modes if fault present	-
Switching on of the warning lamp and/or warning message	-

Main customer complaints likely	Jerking/stalling
	Lack of power
	Absence of automatic stopping of the internal combustion engine (If the vehicle has the Stop and Start system)
Suspect areas	Fuel temperature sensor
	Electrical harness
	Connectors

Fault code(s): P0182 or P0183

Reminder DTC

Do not fill in this section for the FLOW CHART phase

DTC no.	Aftersales text of the DTC	Fault type	Conditions for fault finding	Downgraded mode after a fault is ascertained	Illumination of warning lamps	Suspected areas Major control steps	The client effect(s)/symptom(s) associated with the DTCs	Fault code(s) to be dealt with before working through this flow chart	Tools required
P0182	Diesel temperature sensor: Short-circuit to ground: Value too high	EE							
P0183	Diesel temperature sensor: Short-circuit to positive or open circuit: Value too low	EE							

PRE-CHECK

FLOW CHART Test procedure

STAGE 1:
Check of connector
Switched off

Technical characteristics:
- Fuel temperature sensor (1221): 2 strands, grey

Check points
- Attachment of the connector(s) on the vehicle
- Absence of corrosion on the contacts
- Locking of the connector(s)
- Locking of the pins in the body of the connector
- Spacing between the contacts of the female connector

Are the checks in order?

AP: Diagram/Location/1221/Fuel temperature sensor

AC:

NO (FAULTY)

OUTPUT 1:
Switched off

Repair or replace the connector(s)

AP:

AC:

YES (GOOD CONDITION)

STAGE 2:
Check of the wiring
No specific context for the test

Technical characteristics:
- Fuel temperature sensor (1221): 2 strands, grey
- Engine Control Module (1320): 53 strands, brown

Check all of the wires

Check points
- Continuity
- Insulation with regard to the ground
- Insulation with regard to the positive wire
- Insulation with regard to the other wires

Are the checks in order?

AP: Diagram/Electrical/1221/Fuel temperature sensor
Diagram/Electrical/1320/Engine Control Module

AC:

NO (FAULTY)

OUTPUT 2:
Switched off

Repair or replace the faulty wiring(s)

AP:

AC:

YES (GOOD CONDITION)

STAGE 3:
Resistance measurement
Switched off

Technical characteristics:
Engine Control Module (1320):
- 53 strands, brown, pin 45, ground
- 53 strands, brown, pin 20, signal

Using a thermometer, measure the ambient temperature

Use the diverter 4401-T
Using an ohmmeter, measure the resistance of the temperature sensor between strands 1 and 2

Check that the ambient temperature and the value, in Ohms, of the resistance of the fuel temperature sensor are in line with one another

At 20°C, the resistance must be equal to 3033 Ohm (+/- 290 Ohm)
At 40°C, the resistance must be equal to 1240 Ohm (+/- 100 Ohm)

Are the checks in order?

AP: Diagram/Electrical/1221/Fuel temperature sensor
Diagram/Electrical/1320/Engine Control Module

AC:

NO (FAULTY)

OUTPUT 3:
Switched off

Replace the diesel temperature sensor (1221)

AP: Diagram/Location/1221/Fuel temperature sensor

AC:

YES (GOOD CONDITION)

OUTPUT 4:

The checks carried out did not enable us to identify the faulty component(s).

AP:

AC:

TEMPERATURE EN°C	VALEURS CAPTEUR R MINI	R MAXI
- 40	79000,06	109535,40
- 30	41254,99	55558,92
- 20	22384,34	29458,67
0	7351,14	9247,9
+ 20	2742,72	3323,48
+ 40	1141,48	1338,74
+ 60	522,58	595,19
+ 80	259,21	287,99
+100	136,1	149,99
+120	77,96	83,65
+130	59	64

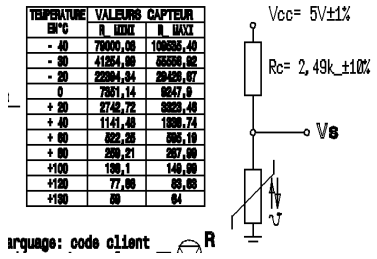

INFORMATION : FAULT CODE P0190 (ENGINE MANAGEMENT ECU)

SPECIAL FEATURE :

FOR : 1CB7 - B0FBM : DV6C TURBO DIESEL

FOR : 1CX7 - B0FBM : DV6C TURBO DIESEL

FOR : 1C58 - B0FBM : DV6C TURBO DIESEL

FOR : 1PT7 - B0FBM : DV6C TURBO DIESEL

FOR : 1PW2 - B0FBM : DV6C TURBO DIESEL

FOR : 1CB8 - B0FBM : DV6C TURBO DIESEL

FOR : 1CXA - B0FBM : DV6C TURBO DIESEL

FOR : 1CYA - B0FBM : DV6C TURBO DIESEL

FOR : 1PTB - B0FBM : DV6C TURBO DIESEL

FOR : 1PTC - B0FBM : DV6C TURBO DIESEL

FOR : 1PIA - B0FBM : DV6C TURBO DIESEL

FOR : 1CMJ - B0FBM : DV6C TURBO DIESEL

FOR : 1PMJ - B0FBM : DV6C TURBO DIESEL

Engine ECU CONTINENTAL SID 807 branch 2	
Fault code	P0190
After sales description of the fault code	Fuel circuit : When stopped, the pressure of the injection rail decreases too slowly
Description of the diagnostics	After the engine is switched off, the pressure in the high pressure common injection rail is higher than 100 bars for 20 ms
Conditions of activation of the diagnostics	Engine ECU in becoming dormant phase
Conditions of disappearance of the fault	Driving for 5 minutes with several full load accelerations for 10 seconds followed by releases of the pedal
	Closing of the EGR (exhaust gas recycling) valve
	Irreversible deactivation of the vehicle speed limiter
	Irreversible deactivation of the vehicle cruise control
	Deactivation of taking account of the tight spot information
	Switching of the turbocharging pressure regulation to

Down-grade modes if fault present	controlled mode
	Switching to fuel "normal reduced flow" mode
	Deactivation of the "easy-move" (electric parking brake) functionality
	Function for limitation of the static torque for the protection of the gearbox
Switching on of the warning lamp and/or warning message	Warning lamp MIL
	"SERVICE" warning lamp
Main customer complaints likely	Jerking/stalling
	Engine acceleration at wrong time
	Noise
	Starting problem
	Smoke from the exhaust
	Lack of power
	Absence of automatic stopping of the internal combustion engine (If the vehicle has the Stop and Start system)
Suspect areas	Pressure sensor on the fuel high-pressure injection rail
	Blockage on the low pressure fuel return circuit
	Electrical harness
	Connectors

Fault code(s): P0190

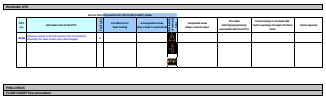

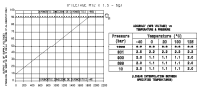

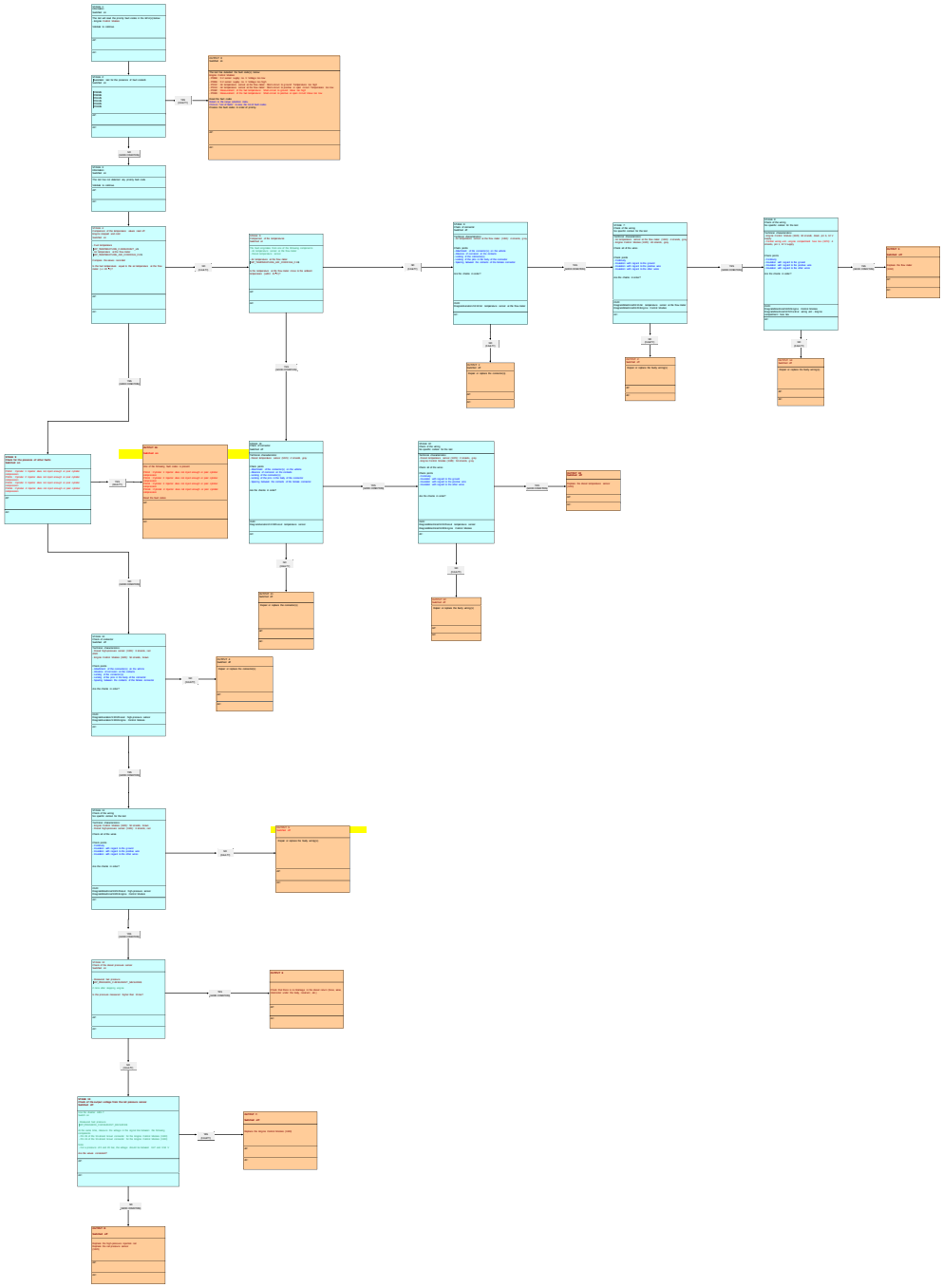

INFORMATION : FAULT CODE P0191 (ENGINE MANAGEMENT ECU)

SPECIAL FEATURE :

FOR : 1CB7 - B0FBM : DV6C TURBO DIESEL

FOR : 1CX7 - B0FBM : DV6C TURBO DIESEL

FOR : 1C58 - B0FBM : DV6C TURBO DIESEL

FOR : 1PT7 - B0FBM : DV6C TURBO DIESEL

FOR : 1PW2 - B0FBM : DV6C TURBO DIESEL

FOR : 1CB8 - B0FBM : DV6C TURBO DIESEL

FOR : 1CXA - B0FBM : DV6C TURBO DIESEL

FOR : 1CYA - B0FBM : DV6C TURBO DIESEL

FOR : 1PTB - B0FBM : DV6C TURBO DIESEL

FOR : 1PTC - B0FBM : DV6C TURBO DIESEL

FOR : 1PIA - B0FBM : DV6C TURBO DIESEL

FOR : 1CMJ - B0FBM : DV6C TURBO DIESEL

FOR : 1PMJ - B0FBM : DV6C TURBO DIESEL

Engine ECU CONTINENTAL SID 807 branch 2	
Fault code	P0191
After sales description of the fault code	Measurement of the pressure in the fuel injection rail : Voltage variation outside the tolerance
Description of the diagnostics	Variation in the pressure more than 400 bars per period of 10 ms
Conditions of activation of the diagnostics	Engine running
Conditions of disappearance of the fault	Driving for 5 minutes with several full load accelerations for 10 seconds followed by releases of the pedal
Down-grade modes	Closing of the EGR (exhaust gas recycling) valve
	Irreversible deactivation of the vehicle speed limiter
	Irreversible deactivation of the vehicle cruise control
	Deactivation of taking account of the tight spot information
	Switching of the turbocharging pressure regulation to controlled mode

if fault present	Switching to fuel "normal reduced flow" mode
	Deactivation of the "easy-move" (electric parking brake) functionality
	Function for limitation of the static torque for the protection of the gearbox
Switching on of the warning lamp and/or warning message	Warning lamp MIL
	"SERVICE" warning lamp
Main customer complaints likely	Jerking/stalling
	Engine acceleration at wrong time
	Noise
	Starting problem
	Smoke from the exhaust
	Lack of power
	No automatic stopping of the internal combustion engine (If the vehicle has the Stop and Start system)
Suspect areas	Pressure sensor on the fuel high-pressure injection rail
	Electrical harness
	Connectors

Fault code(s): P0191 or P0192 or P0193

Reminder DTC

Do not sit on this section for the FLOW CHART phase

DTC no.	Alternative text of the DTC	Interlock	Conditions for fault finding	Drive/ignition cycle after a fault is memorized	Illumination of the warning lamp	Suspected areas Major control steps	The check effects/Symptom(s) associated with the DTCs	Fault code(s) to be dealt with before working through this flow chart	Tools required
P0191	Pressure sensor on the fuel injection rail: Voltage variation outside tolerance	NO							
P0192	Pressure sensor on the fuel injection rail: Short-circuit to ground, Pressure too low	NO							
P0193	Pressure sensor on the fuel injection rail: Short-circuit to positive, Pressure too high	NO							

PRE-CHECK

FLOW CHART Test procedure

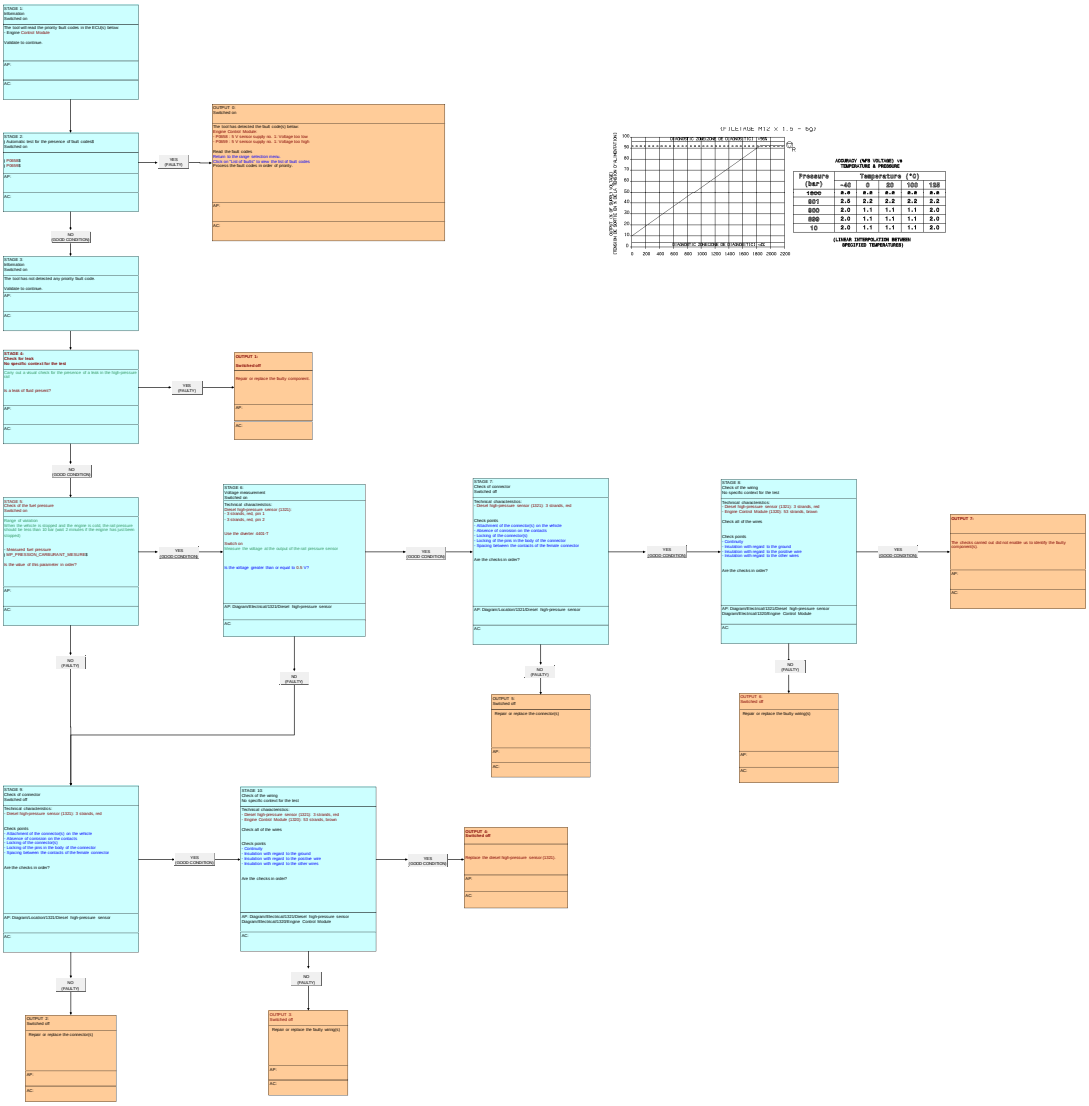

INFORMATION : FAULT CODE P0192 (ENGINE MANAGEMENT ECU)

SPECIAL FEATURE :

FOR : 1CB7 - B0FBM : DV6C TURBO DIESEL

FOR : 1CX7 - B0FBM : DV6C TURBO DIESEL

FOR : 1C58 - B0FBM : DV6C TURBO DIESEL

FOR : 1PT7 - B0FBM : DV6C TURBO DIESEL

FOR : 1PW2 - B0FBM : DV6C TURBO DIESEL

FOR : 1CB8 - B0FBM : DV6C TURBO DIESEL

FOR : 1CXA - B0FBM : DV6C TURBO DIESEL

FOR : 1CYA - B0FBM : DV6C TURBO DIESEL

FOR : 1PTB - B0FBM : DV6C TURBO DIESEL

FOR : 1PTC - B0FBM : DV6C TURBO DIESEL

FOR : 1PIA - B0FBM : DV6C TURBO DIESEL

FOR : 1CMJ - B0FBM : DV6C TURBO DIESEL

FOR : 1PMJ - B0FBM : DV6C TURBO DIESEL

Engine ECU CONTINENTAL SID 807 branch 2	
Fault code	P0192
After sales description of the fault code	Measurement of the pressure in the fuel injection rail : Short circuit to earth : Pressure too low
Description of the diagnostics	Voltage lower than 200 mV
Conditions of activation of the diagnostics	Ignition switched on
Conditions of disappearance of the fault	Driving for 5 minutes
Down-grade modes	Closing of the EGR (exhaust gas recycling) valve
	Irreversible deactivation of the vehicle speed limiter
	Irreversible deactivation of the vehicle cruise control
	Deactivation of taking account of the tight spot information
	Switching of the turbocharging pressure regulation to controlled mode

if fault present	Switching to fuel "normal reduced flow" mode
	Deactivation of the "easy-move" (electric parking brake) functionality
	Function for limitation of the static torque for the protection of the gearbox
Switching on of the warning lamp and/or warning message	Warning lamp MIL
	"SERVICE" warning lamp
Main customer complaints likely	Jerking/stalling
	Engine acceleration at wrong time
	Noise
	Starting problem
	Lack of power
	Absence of automatic stopping of the internal combustion engine (If the vehicle has the Stop and Start system)
Suspect areas	Pressure sensor on the fuel high-pressure injection rail
	Electrical harness
	Connectors

Fault code(s): P0191 or P0192 or P0193

Reminder DTC

Do not sit on this section for the FLOW CHART phase

DTC no.	Alternative text of the DTC	Interlock	Conditions for fault finding	Drive/ignition cycle after a fault is memorized	Warning lamp on the dashboard	Suggested areas Major control steps	The check effect(s)/symptom(s) associated with the DTCs	Fault code(s) to be dealt with before working through this flow chart	Tools required
P0191	Pressure sensor on the fuel injection rail: Voltage variation outside tolerance	XX							
P0192	Pressure sensor on the fuel injection rail: Short-circuit to ground, Pressure too low	XX							
P0193	Pressure sensor on the fuel injection rail: Short-circuit to positive, Pressure too high	XX							

PRE-CHECK

FLOW CHART Test procedure

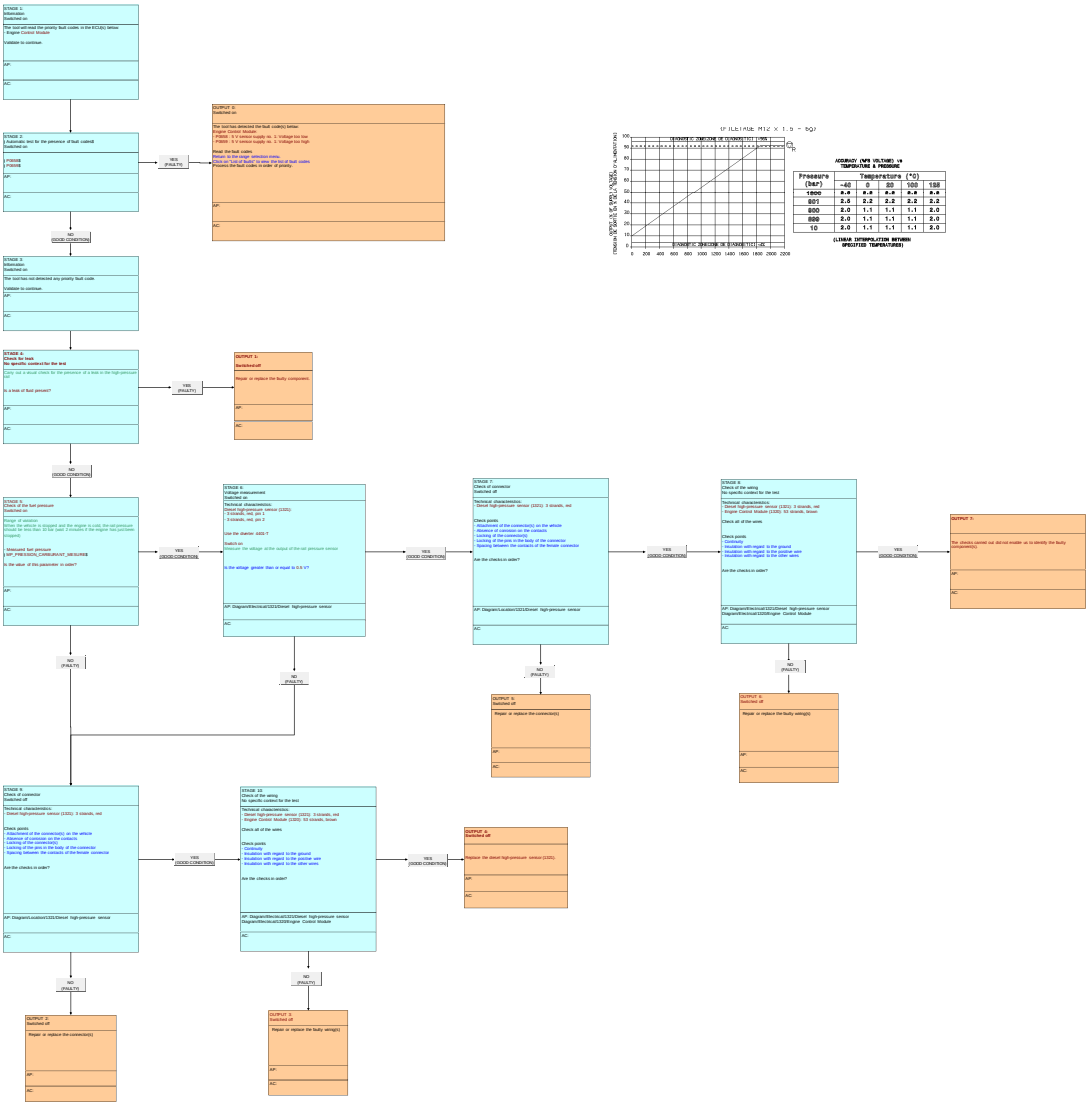

INFORMATION : FAULT CODE P0193 (ENGINE MANAGEMENT ECU)

SPECIAL FEATURE :

FOR : 1CB7 - B0FBM : DV6C TURBO DIESEL

FOR : 1CX7 - B0FBM : DV6C TURBO DIESEL

FOR : 1C58 - B0FBM : DV6C TURBO DIESEL

FOR : 1PT7 - B0FBM : DV6C TURBO DIESEL

FOR : 1PW2 - B0FBM : DV6C TURBO DIESEL

FOR : 1CB8 - B0FBM : DV6C TURBO DIESEL

FOR : 1CXA - B0FBM : DV6C TURBO DIESEL

FOR : 1CYA - B0FBM : DV6C TURBO DIESEL

FOR : 1PTB - B0FBM : DV6C TURBO DIESEL

FOR : 1PTC - B0FBM : DV6C TURBO DIESEL

FOR : 1PIA - B0FBM : DV6C TURBO DIESEL

FOR : 1CMJ - B0FBM : DV6C TURBO DIESEL

FOR : 1PMJ - B0FBM : DV6C TURBO DIESEL

Engine ECU CONTINENTAL SID 807 branch 2	
Fault code	P0193
After sales description of the fault code	Measurement of the pressure in the fuel injection rail : Short circuit to positive : Pressure too high
Description of the diagnostics	Voltage greater than 4,8 V
Conditions of activation of the diagnostics	Ignition switched on
Conditions of disappearance of the fault	Driving for 5 minutes
Down-grade modes	Closing of the EGR (exhaust gas recycling) valve
	Irreversible deactivation of the vehicle speed limiter
	Irreversible deactivation of the vehicle cruise control
	Deactivation of taking account of the tight spot information
	Switching of the turbocharging pressure regulation to controlled mode

if fault present	Switching to fuel "normal reduced flow" mode
	Deactivation of the "easy-move" (electric parking brake) functionality
	Function for limitation of the static torque for the protection of the gearbox
Switching on of the warning lamp and/or warning message	Warning lamp MIL
	"SERVICE" warning lamp
Main customer complaints likely	Jerking/stalling
	Noise
	Starting problem
	Lack of power
Suspect areas	Pressure sensor on the fuel high-pressure injection rail
	Electrical harness
	Connectors

Fault code(s): P0191 or P0192 or P0193

Reminder DTC

Do not sit on this section for the FLOW CHART phase

DTC no.	Alternative text of the DTC	Interlock	Conditions for fault finding	Drive/guided route refer a fault is ascertained	Malfunction Indicator Lamp (MIL)	Suggested areas Major control steps	The check effects/Symptom(s) associated with the DTCs	Fault code(s) to be dealt with before working through this flow chart	Tools required
P0191	Pressure sensor on the fuel injection rail: Voltage variation outside tolerance	Yes							
P0192	Pressure sensor on the fuel injection rail: Short-circuit to ground, Pressure too low	Yes							
P0193	Pressure sensor on the fuel injection rail: Short-circuit to positive, Pressure too high	Yes							

PRE-CHECK

FLOW CHART Test procedure

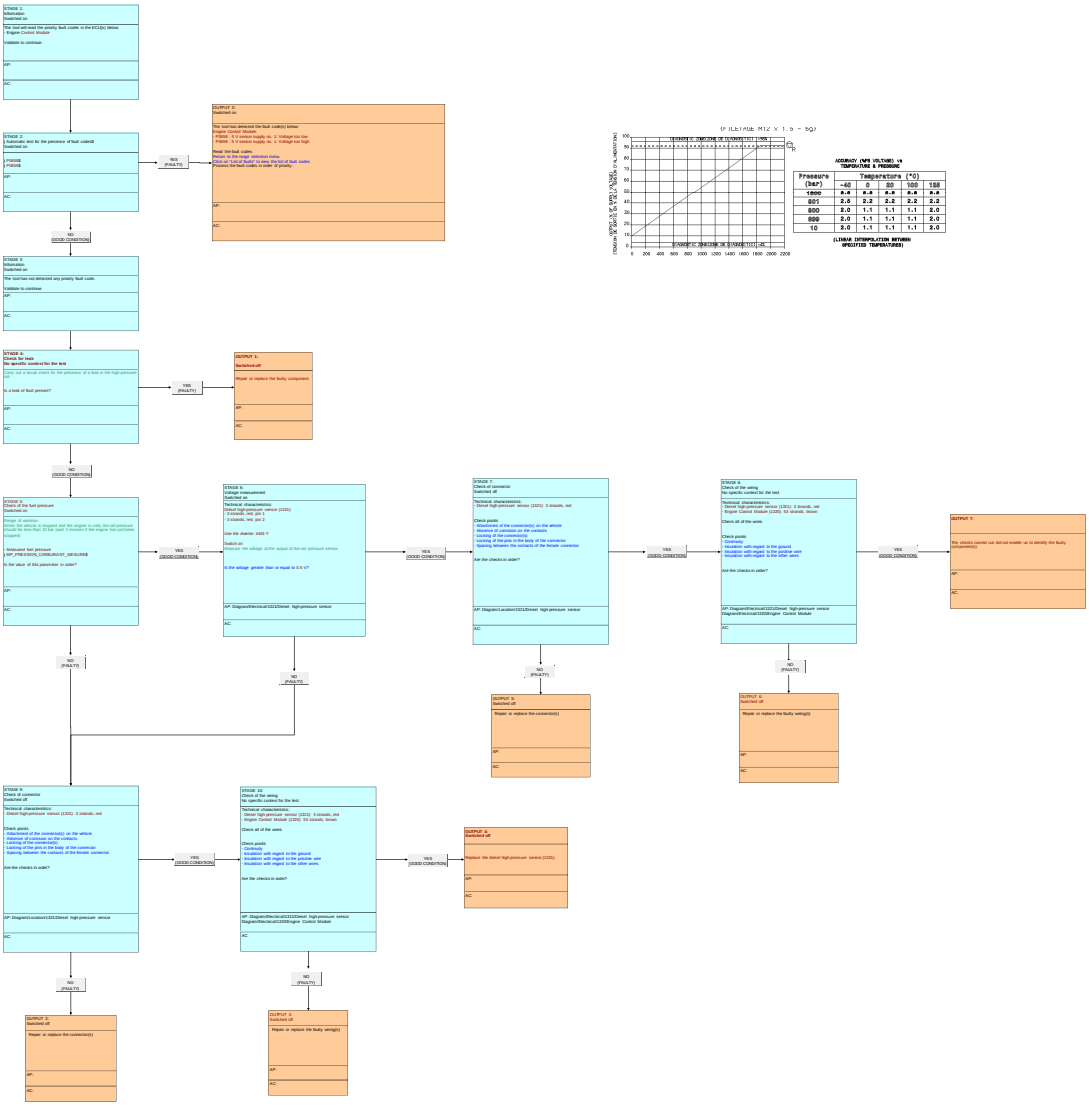

INFORMATION : FAULT CODE P0201 (ENGINE MANAGEMENT ECU)

SPECIAL FEATURE :

FOR : 1CB7 - B0FBM : DV6C TURBO DIESEL

FOR : 1CX7 - B0FBM : DV6C TURBO DIESEL

FOR : 1C58 - B0FBM : DV6C TURBO DIESEL

FOR : 1PT7 - B0FBM : DV6C TURBO DIESEL

FOR : 1PW2 - B0FBM : DV6C TURBO DIESEL

FOR : 1CB8 - B0FBM : DV6C TURBO DIESEL

FOR : 1CXA - B0FBM : DV6C TURBO DIESEL

FOR : 1CYA - B0FBM : DV6C TURBO DIESEL

FOR : 1PTB - B0FBM : DV6C TURBO DIESEL

FOR : 1PTC - B0FBM : DV6C TURBO DIESEL

FOR : 1PIA - B0FBM : DV6C TURBO DIESEL

FOR : 1CMJ - B0FBM : DV6C TURBO DIESEL

FOR : 1PMJ - B0FBM : DV6C TURBO DIESEL

Engine ECU CONTINENTAL SID 807 branch 2	
Fault code	P0201
After sales description of the fault code	Injector 1 signal. : Open circuit
Description of the diagnostics	Open circuit on the fuel injector 1 control track detected for 400 ms
Conditions of activation of the diagnostics	Ignition switched on
Conditions of disappearance of the fault	Driving for 5 minutes
Down-grade modes if fault present	Cutting of fuel injector 1
Switching on of the warning lamp and/or warning message	Warning lamp MIL

Main customer complaints likely	Lack of power
	Noise
	Jerking/stalling
	Starting problem
	Malfunctioning of the idle
	Absence of automatic stopping of the internal combustion engine (If the vehicle has the Stop and Start system)
	Problem with automatic restarting of the internal combustion engine (If the vehicle has the Stop and Start system)
Suspect areas	Fuel injector 1
	Electrical harness
	Connectors

Fault code(s): P0201 or P0202 or P0203 or P0204 or P0262 or P0265 or P0268 or P0271 or P062D or P1641 or P2146 or P2148

Reminder DTC

Do not fill in this section for the FLOW CHART phase

DTC no.	Alternative text of the DTC	Priority	Conditions for fault finding	Downgraded mode after a fault is ascertained	Illuminated warning light	Suspected areas Major control steps	The client effects(symptomatic) associated with the DTCs	Fault code(s) to be dealt with before working through this flow chart	Tools required
P0201	Control of injector 1: Open circuit on the circuit (wiring, injector, ECU)	A							
P0202	Control of injector 2: Open circuit on the circuit (wiring, injector, ECU)	A							
P0203	Control of injector 3: Open circuit on the circuit (wiring, injector, ECU)	A							
P0204	Control of injector 4: Open circuit on the circuit (wiring, injector, ECU)	A							
P0262	Control of injector 1: Short-circuit to positive on the circuit (wiring, injector, ECU)	A							
P0265	Control of injector 2: Short-circuit to positive on the circuit (wiring, injector, ECU)	A							
P0268	Control of injector 3: Short-circuit to positive on the circuit (wiring, injector, ECU)	A							
P0271	Control of injector 4: Short-circuit to positive on the circuit (wiring, injector, ECU)	A							
P062D	ECU voltage converter for control of the injectors faulty on bank 1	A							
P1641	ECU initialisation malfunction of the injector bank or wiring fault	A							
P2146	Injector control: injection bank 1: short-circuit	A							
P2148	Injector control: injection bank 1: voltage too high	A							

PRE-CHECK

FLOW CHART Test procedure

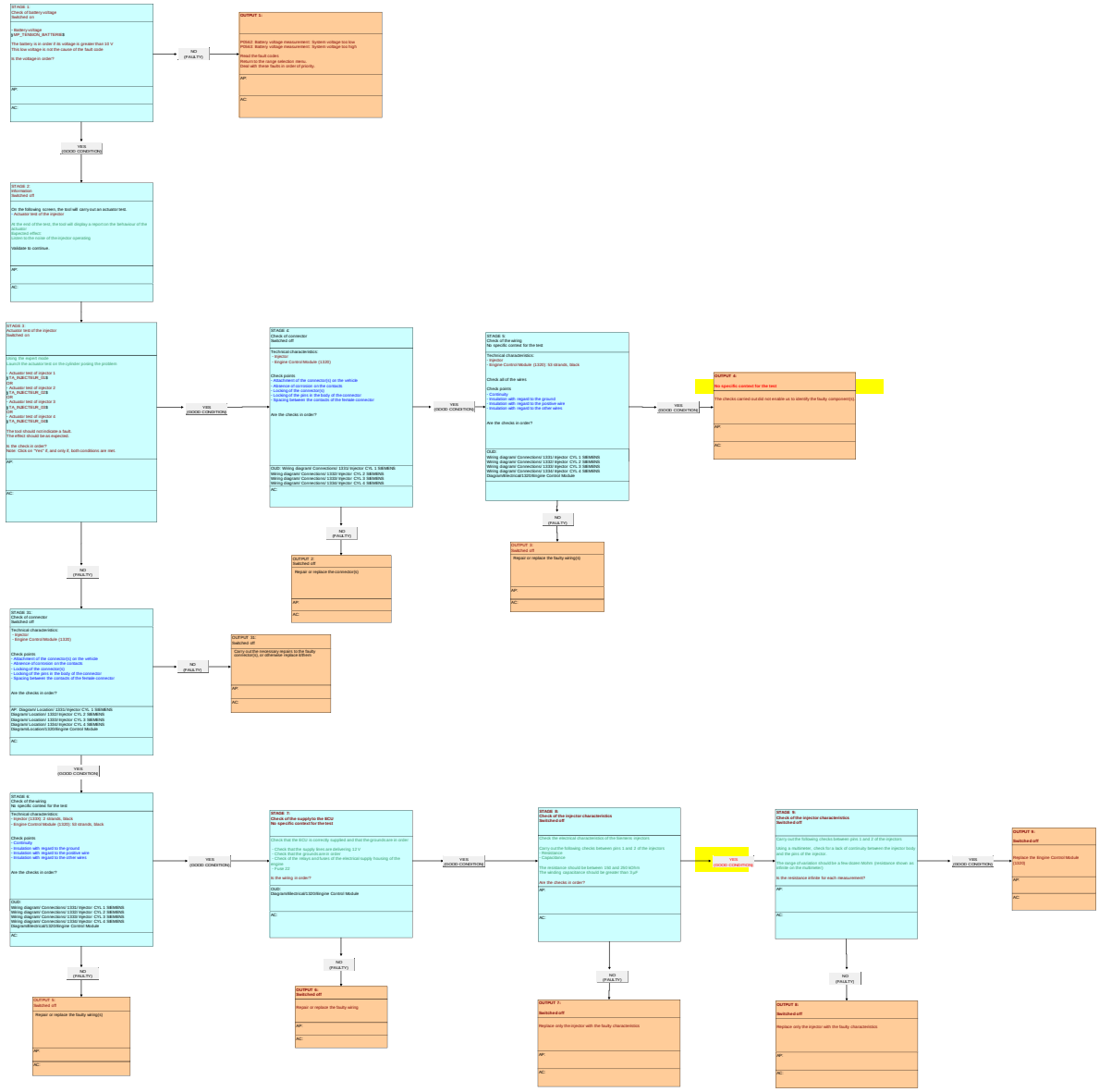

INFORMATION : FAULT CODE P0202 (ENGINE MANAGEMENT ECU)

SPECIAL FEATURE :

FOR : 1CB7 - B0FBM : DV6C TURBO DIESEL

FOR : 1CX7 - B0FBM : DV6C TURBO DIESEL

FOR : 1C58 - B0FBM : DV6C TURBO DIESEL

FOR : 1PT7 - B0FBM : DV6C TURBO DIESEL

FOR : 1PW2 - B0FBM : DV6C TURBO DIESEL

FOR : 1CB8 - B0FBM : DV6C TURBO DIESEL

FOR : 1CXA - B0FBM : DV6C TURBO DIESEL

FOR : 1CYA - B0FBM : DV6C TURBO DIESEL

FOR : 1PTB - B0FBM : DV6C TURBO DIESEL

FOR : 1PTC - B0FBM : DV6C TURBO DIESEL

FOR : 1PIA - B0FBM : DV6C TURBO DIESEL

FOR : 1CMJ - B0FBM : DV6C TURBO DIESEL

FOR : 1PMJ - B0FBM : DV6C TURBO DIESEL

Engine ECU CONTINENTAL SID 807 branch 2	
Fault code	P0202
After sales description of the fault code	Injector 2 signal. : Open circuit
Description of the diagnostics	Open circuit on the fuel injector 2 control track detected for 400 ms
Conditions of activation of the diagnostics	Ignition switched on
Conditions of disappearance of the fault	Driving for 5 minutes
Down-grade modes if fault present	Cutting of fuel injector 2
Switching on of the warning lamp and/or warning message	Warning lamp MIL

Main customer complaints likely	Lack of power
	Noise
	Jerking/stalling
	Starting problem
	Malfunctioning of the idle
	Absence of automatic stopping of the internal combustion engine (If the vehicle has the Stop and Start system)
	Problem with automatic restarting of the internal combustion engine (If the vehicle has the Stop and Start system)
Suspect areas	Fuel injector 2
	Electrical harness
	Connectors

Fault code(s): P0201 or P0202 or P0203 or P0204 or P0262 or P0265 or P0268 or P0271 or P062D or P1641 or P2146 or P2148

Reminder DTC

Do not fill in this section for the FLOW CHART phase

DTC no.	Alternative text of the DTC	Priority	Conditions for fault finding	Downgraded mode after a fault is ascertained	Operating safety (Operating safety)	Suspected areas Major control steps	The client effects(symptomatic) associated with the DTCs	Fault code(s) to be dealt with before working through this flow chart	Tools required
P0201	Control of injector 1: Open circuit on the circuit (wiring, injector, ECU)	A							
P0202	Control of injector 2: Open circuit on the circuit (wiring, injector, ECU)	A							
P0203	Control of injector 3: Open circuit on the circuit (wiring, injector, ECU)	A							
P0204	Control of injector 4: Open circuit on the circuit (wiring, injector, ECU)	A							
P0262	Control of injector 1: Short-circuit to positive on the circuit (wiring, injector, ECU)	A							
P0265	Control of injector 2: Short-circuit to positive on the circuit (wiring, injector, ECU)	A							
P0268	Control of injector 3: Short-circuit to positive on the circuit (wiring, injector, ECU)	A							
P0271	Control of injector 4: Short-circuit to positive on the circuit (wiring, injector, ECU)	A							
P062D	ECU voltage converter for control of the injectors faulty on bank 1	A							
P1641	ECU initialisation malfunction of the injector bank or wiring fault	A							
P2146	Injector control: injection bank 1: short-circuit	A							
P2148	Injector control: injection bank 1: voltage too high	A							

PRE-CHECK

FLOW CHART Test procedure

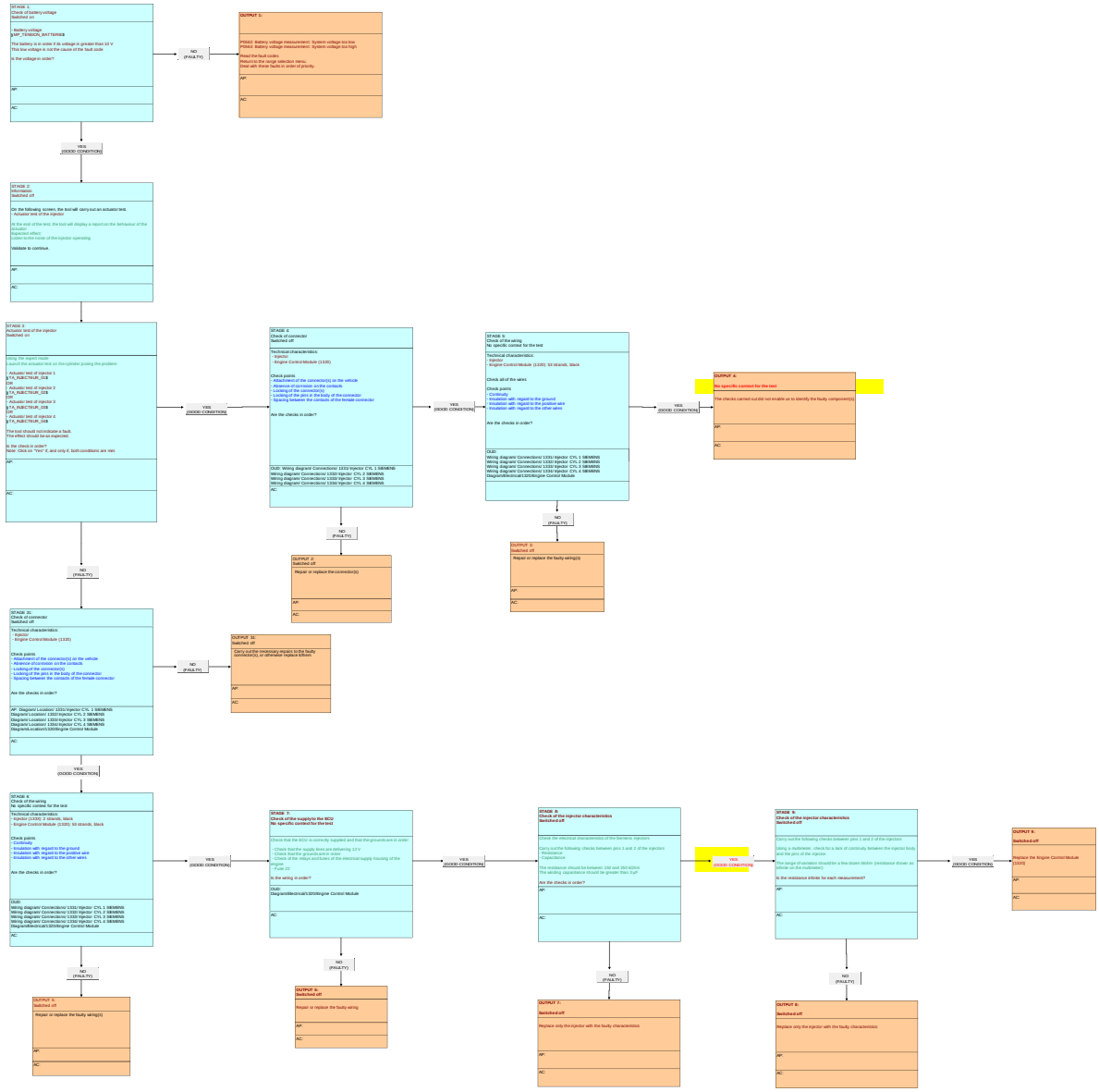

INFORMATION : FAULT CODE P0203 (ENGINE MANAGEMENT ECU)

SPECIAL FEATURE :

FOR : 1CB7 - B0FBM : DV6C TURBO DIESEL

FOR : 1CX7 - B0FBM : DV6C TURBO DIESEL

FOR : 1C58 - B0FBM : DV6C TURBO DIESEL

FOR : 1PT7 - B0FBM : DV6C TURBO DIESEL

FOR : 1PW2 - B0FBM : DV6C TURBO DIESEL

FOR : 1CB8 - B0FBM : DV6C TURBO DIESEL

FOR : 1CXA - B0FBM : DV6C TURBO DIESEL

FOR : 1CYA - B0FBM : DV6C TURBO DIESEL

FOR : 1PTB - B0FBM : DV6C TURBO DIESEL

FOR : 1PTC - B0FBM : DV6C TURBO DIESEL

FOR : 1PIA - B0FBM : DV6C TURBO DIESEL

FOR : 1CMJ - B0FBM : DV6C TURBO DIESEL

FOR : 1PMJ - B0FBM : DV6C TURBO DIESEL

Engine ECU CONTINENTAL SID 807 branch 2	
Fault code	P0203
After sales description of the fault code	Injector 3 signal. : Open circuit
Description of the diagnostics	Open circuit on the fuel injector 3 control track detected for 400 ms
Conditions of activation of the diagnostics	Ignition switched on
Conditions of disappearance of the fault	Driving for 5 minutes
Down-grade modes if fault present	Cutting of fuel injector 3
Switching on of the warning lamp and/or warning message	Warning lamp MIL

Main customer complaints likely	Lack of power
	Noise
	Jerking/stalling
	Starting problem
	Malfunctioning of the idle
	Absence of automatic stopping of the internal combustion engine (If the vehicle has the Stop and Start system)
	Problem with automatic restarting of the internal combustion engine (If the vehicle has the Stop and Start system)
Suspect areas	Fuel injector 3
	Electrical harness
	Connectors

Fault code(s): P0201 or P0202 or P0203 or P0204 or P0262 or P0265 or P0268 or P0271 or P062D or P1641 or P2146 or P2148

Reminder DTC

Do not fill in this section for the FLOW CHART phase

DTC no.	Alternative text of the DTC	Priority	Conditions for fault finding	Downgraded mode after a fault is ascertained	Operating safety (Operating safety)	Suspected areas Major control steps	The client effects(symptomatic) associated with the DTCs	Fault code(s) to be dealt with before working through this flow chart	Tools required
P0201	Control of injector 1: Open circuit on the circuit (wiring, injector, ECU)	A							
P0202	Control of injector 2: Open circuit on the circuit (wiring, injector, ECU)	A							
P0203	Control of injector 3: Open circuit on the circuit (wiring, injector, ECU)	A							
P0204	Control of injector 4: Open circuit on the circuit (wiring, injector, ECU)	A							
P0262	Control of injector 1: Short-circuit to positive on the circuit (wiring, injector, ECU)	A							
P0265	Control of injector 2: Short-circuit to positive on the circuit (wiring, injector, ECU)	A							
P0268	Control of injector 3: Short-circuit to positive on the circuit (wiring, injector, ECU)	A							
P0271	Control of injector 4: Short-circuit to positive on the circuit (wiring, injector, ECU)	A							
P062D	ECU voltage converter for control of the injectors faulty on bank 1	A							
P1641	ECU initialisation malfunction of the injector bank or wiring fault	A							
P2146	Injector control: injection bank 1: short-circuit	A							
P2148	Injector control: injection bank 1: voltage too high	A							

PRE-CHECK

FLOW CHART Test procedure

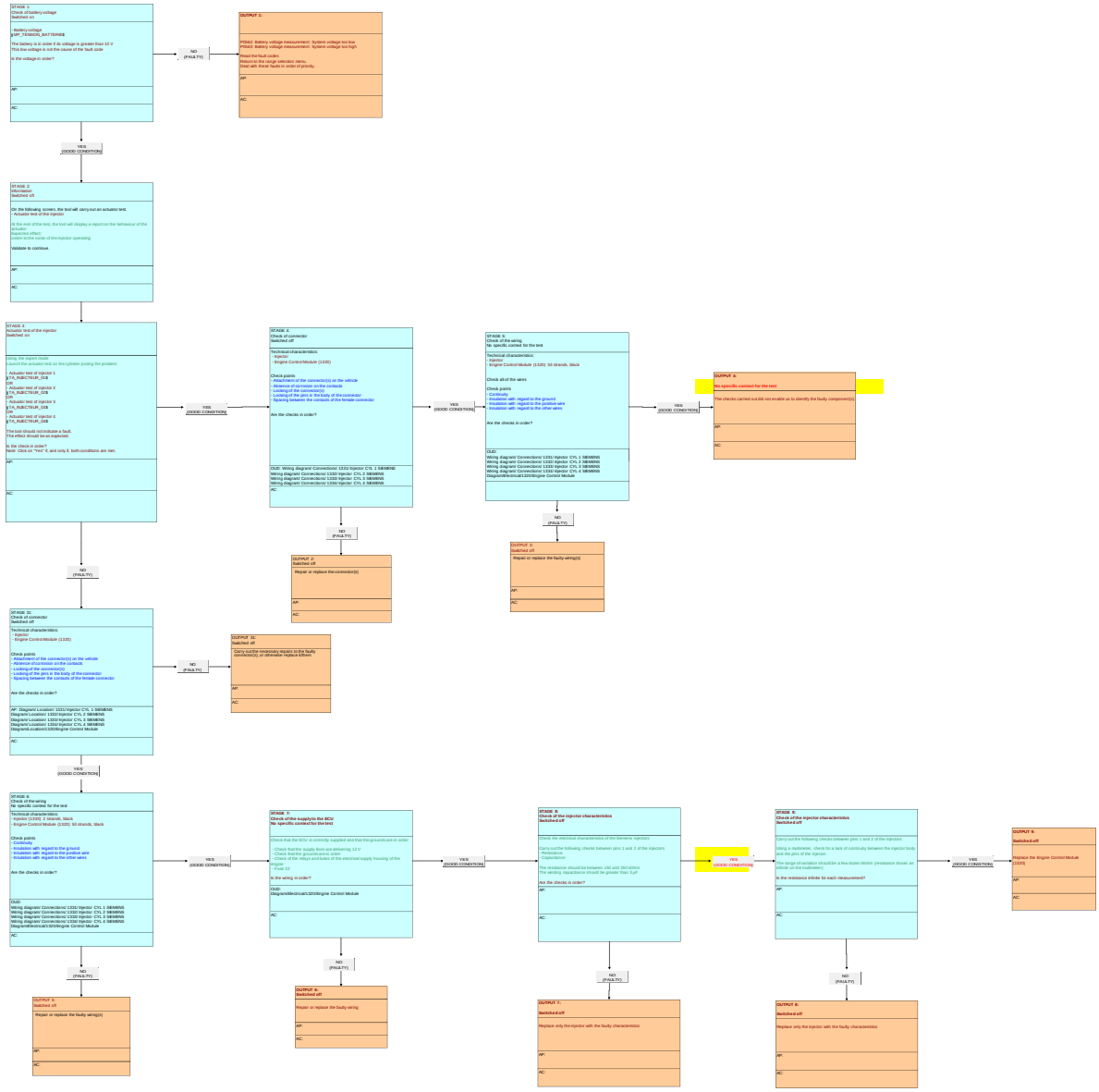

INFORMATION : FAULT CODE P0204 (ENGINE MANAGEMENT ECU)

SPECIAL FEATURE :

FOR : 1CB7 - B0FBM : DV6C TURBO DIESEL

FOR : 1CX7 - B0FBM : DV6C TURBO DIESEL

FOR : 1C58 - B0FBM : DV6C TURBO DIESEL

FOR : 1PT7 - B0FBM : DV6C TURBO DIESEL

FOR : 1PW2 - B0FBM : DV6C TURBO DIESEL

FOR : 1CB8 - B0FBM : DV6C TURBO DIESEL

FOR : 1CXA - B0FBM : DV6C TURBO DIESEL

FOR : 1CYA - B0FBM : DV6C TURBO DIESEL

FOR : 1PTB - B0FBM : DV6C TURBO DIESEL

FOR : 1PTC - B0FBM : DV6C TURBO DIESEL

FOR : 1PIA - B0FBM : DV6C TURBO DIESEL

FOR : 1CMJ - B0FBM : DV6C TURBO DIESEL

FOR : 1PMJ - B0FBM : DV6C TURBO DIESEL

Engine ECU CONTINENTAL SID 807 branch 2	
Fault code	P0204
After sales description of the fault code	Injector 4 signal. : Open circuit
Description of the diagnostics	Open circuit on the fuel injector 4 control track detected for 400 ms
Conditions of activation of the diagnostics	Ignition switched on
Conditions of disappearance of the fault	Driving for 5 minutes
Down-grade modes if fault present	Cutting of fuel injector 4
Switching on of the warning lamp and/or warning message	Warning lamp MIL

Main customer complaints likely	Lack of power
	Noise
	Jerking/stalling
	Starting problem
	Malfunctioning of the idle
	Absence of automatic stopping of the internal combustion engine (If the vehicle has the Stop and Start system)
	Problem with automatic restarting of the internal combustion engine (If the vehicle has the Stop and Start system)
Suspect areas	Fuel injector 4
	Electrical harness
	Connectors

Fault code(s): P0201 or P0202 or P0203 or P0204 or P0262 or P0265 or P0268 or P0271 or P062D or P1641 or P2146 or P2148

Reminder DTC

Do not fill in this section for the FLOW CHART phase

DTC no.	Aftersales text of the DTC	Priority	Conditions for fault finding	Downgraded mode after a fault is ascertained	Operating safety (Operating safety)	Suspected areas Major control steps	The client effects(Symptomatic) associated with the DTCs	Fault code(s) to be dealt with before working through this flow chart	Tools required
P0201	Control of injector 1: Open circuit on the circuit (wiring, injector, ECU)	A							
P0202	Control of injector 2: Open circuit on the circuit (wiring, injector, ECU)	A							
P0203	Control of injector 3: Open circuit on the circuit (wiring, injector, ECU)	A							
P0204	Control of injector 4: Open circuit on the circuit (wiring, injector, ECU)	A							
P0262	Control of injector 1: Short-circuit to positive on the circuit (wiring, injector, ECU)	A							
P0265	Control of injector 2: Short-circuit to positive on the circuit (wiring, injector, ECU)	A							
P0268	Control of injector 3: Short-circuit to positive on the circuit (wiring, injector, ECU)	A							
P0271	Control of injector 4: Short-circuit to positive on the circuit (wiring, injector, ECU)	A							
P062D	ECU voltage converter for control of the injectors faulty on bank 1	A							
P1641	ECU initialisation malfunction of the injector bank or wiring fault	A							
P2146	Injector control: injection bank 1: short-circuit	A							
P2148	Injector control: injection bank 1: voltage too high	A							

PRE-CHECK

FLOW CHART Test procedure

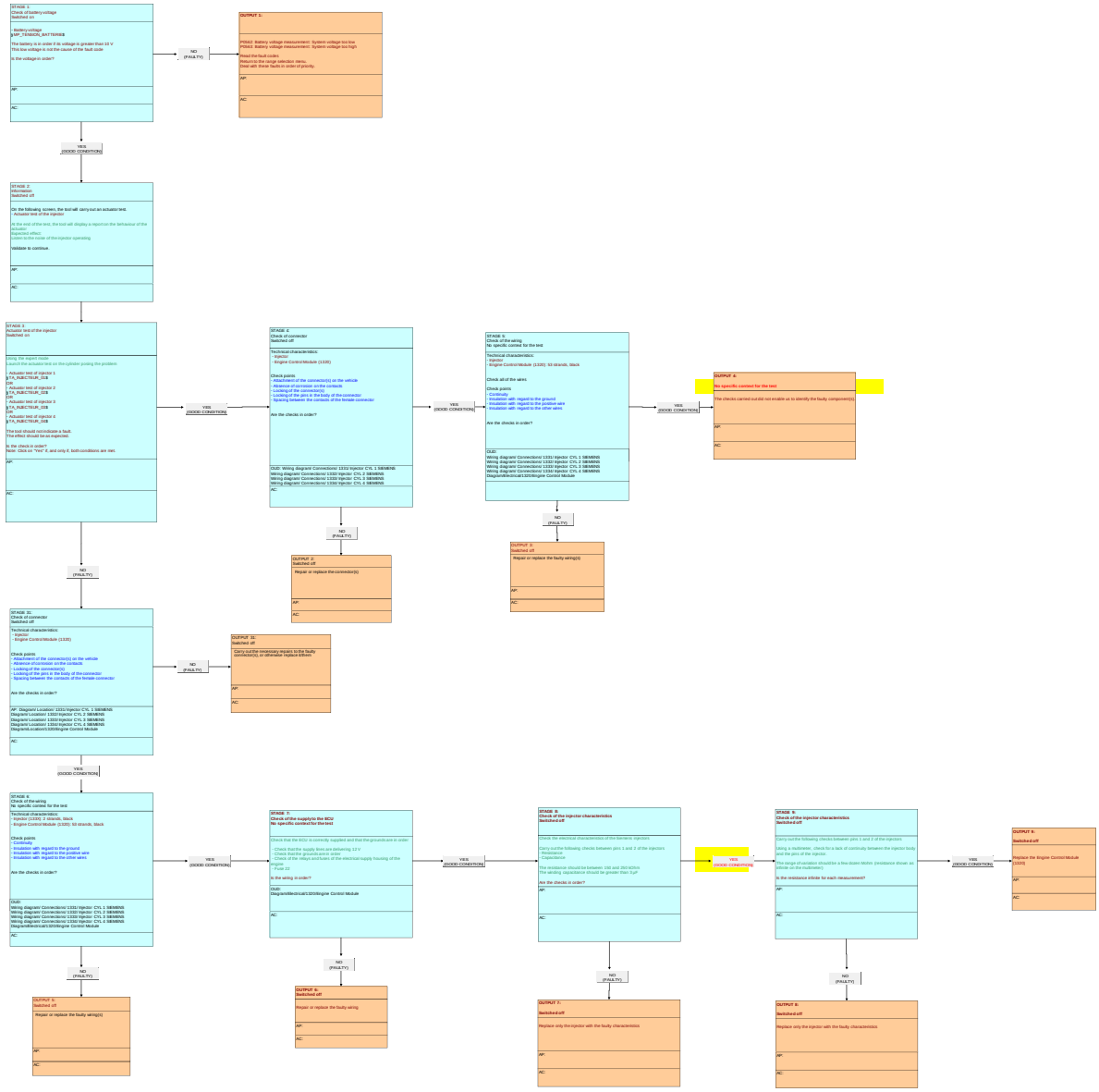

INFORMATION : FAULT CODE P0215 (ENGINE MANAGEMENT ECU)

SPECIAL FEATURE :

FOR : 1CB7 - B0FBM : DV6C TURBO DIESEL

FOR : 1CX7 - B0FBM : DV6C TURBO DIESEL

FOR : 1C58 - B0FBM : DV6C TURBO DIESEL

FOR : 1PT7 - B0FBM : DV6C TURBO DIESEL

FOR : 1PW2 - B0FBM : DV6C TURBO DIESEL

FOR : 1CB8 - B0FBM : DV6C TURBO DIESEL

FOR : 1CXA - B0FBM : DV6C TURBO DIESEL

FOR : 1CYA - B0FBM : DV6C TURBO DIESEL

FOR : 1PTB - B0FBM : DV6C TURBO DIESEL

FOR : 1PTC - B0FBM : DV6C TURBO DIESEL

FOR : 1PIA - B0FBM : DV6C TURBO DIESEL

FOR : 1CMJ - B0FBM : DV6C TURBO DIESEL

FOR : 1PMJ - B0FBM : DV6C TURBO DIESEL

Engine ECU CONTINENTAL SID 807 branch 2	
Fault code	P0215
After sales description of the fault code	Main relay control : Poor operation of the relay, the ECU is not being supplied as it should be
Description of the diagnostics	The engine management ECU is still supplied 1 seconds after the request to cut off its supply. Loss of supply of the engine ECU for 1 s without a prior request being detected, due to an incorrect value memorised at the following wake-up
Conditions of activation of the diagnostics	Ignition switched on
Conditions of disappearance of the fault	Driving for 5 minutes
Down-grade modes if fault present	-
Switching on of the	

warning lamp and/or warning message	-
Main customer complaints likely	Starting problem
Suspect areas	Main relay
	Electrical harness
	Connectors

Fault code(s): P0215

Reminder DTC

Do not fill in this section for the FLOW CHART phase

DTC no.	Aftersales text of the DTC	Fault type	Conditions for fault finding	Downgraded mode after a fault is ascertained	Warning lamp(s) on dashboard	Suspected areas Major control steps	The client effects(symptom(s) associated with the DTCs	Fault code(s) to be dealt with before working through this flow chart	Tools required
P0215	Control of the main relay: The ECU is not supplied as necessary	02							

PRE-CHECK

FLOW CHART Test procedure

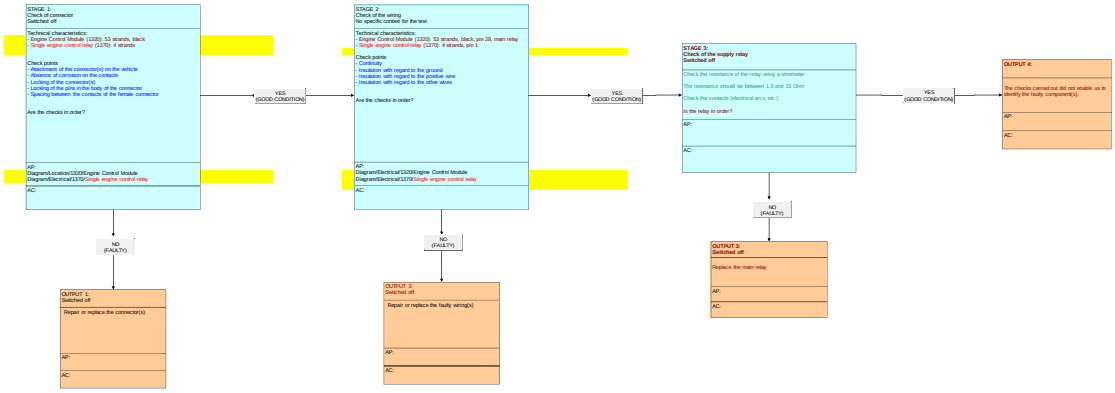

INFORMATION : FAULT CODE P0222 (ENGINE MANAGEMENT ECU)

SPECIAL FEATURE :

FOR : 1CB7 - B0FBM : DV6C TURBO DIESEL

FOR : 1CX7 - B0FBM : DV6C TURBO DIESEL

FOR : 1C58 - B0FBM : DV6C TURBO DIESEL

FOR : 1PT7 - B0FBM : DV6C TURBO DIESEL

FOR : 1PW2 - B0FBM : DV6C TURBO DIESEL

FOR : 1CB8 - B0FBM : DV6C TURBO DIESEL

FOR : 1CXA - B0FBM : DV6C TURBO DIESEL

FOR : 1CYA - B0FBM : DV6C TURBO DIESEL

FOR : 1PTB - B0FBM : DV6C TURBO DIESEL

FOR : 1PTC - B0FBM : DV6C TURBO DIESEL

FOR : 1PIA - B0FBM : DV6C TURBO DIESEL

FOR : 1CMJ - B0FBM : DV6C TURBO DIESEL

FOR : 1PMJ - B0FBM : DV6C TURBO DIESEL

Engine ECU CONTINENTAL SID 807 branch 2	
Fault code	P0222
After sales description of the fault code	Measurement of the accelerator pedal position : Track 1 signal short circuit to earth
Description of the diagnostics	Voltage less than 0,1 V for 200 ms
Conditions of activation of the diagnostics	Engine running
Conditions of disappearance of the fault	Driving for 5 minutes with several full load accelerations for 10 seconds followed by releases of the pedal
Down-grade modes if fault present	Irreversible deactivation of the vehicle speed limiter
	Irreversible deactivation of the vehicle cruise control
	Deactivation of taking account of the tight spot information
	Application of the mode "voluntary downgrade of performance"
	Deactivation of the "easy-move" (electric parking brake)

	functionality
Switching on of the warning lamp and/or warning message	"SERVICE" warning lamp
Main customer complaints likely	-
Suspect areas	Accelerator pedal
	Electrical harness
	Connectors

Fault code(s): P0222 or P0223 or P0227 or P0228 or P2137

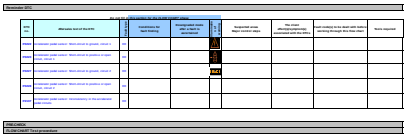

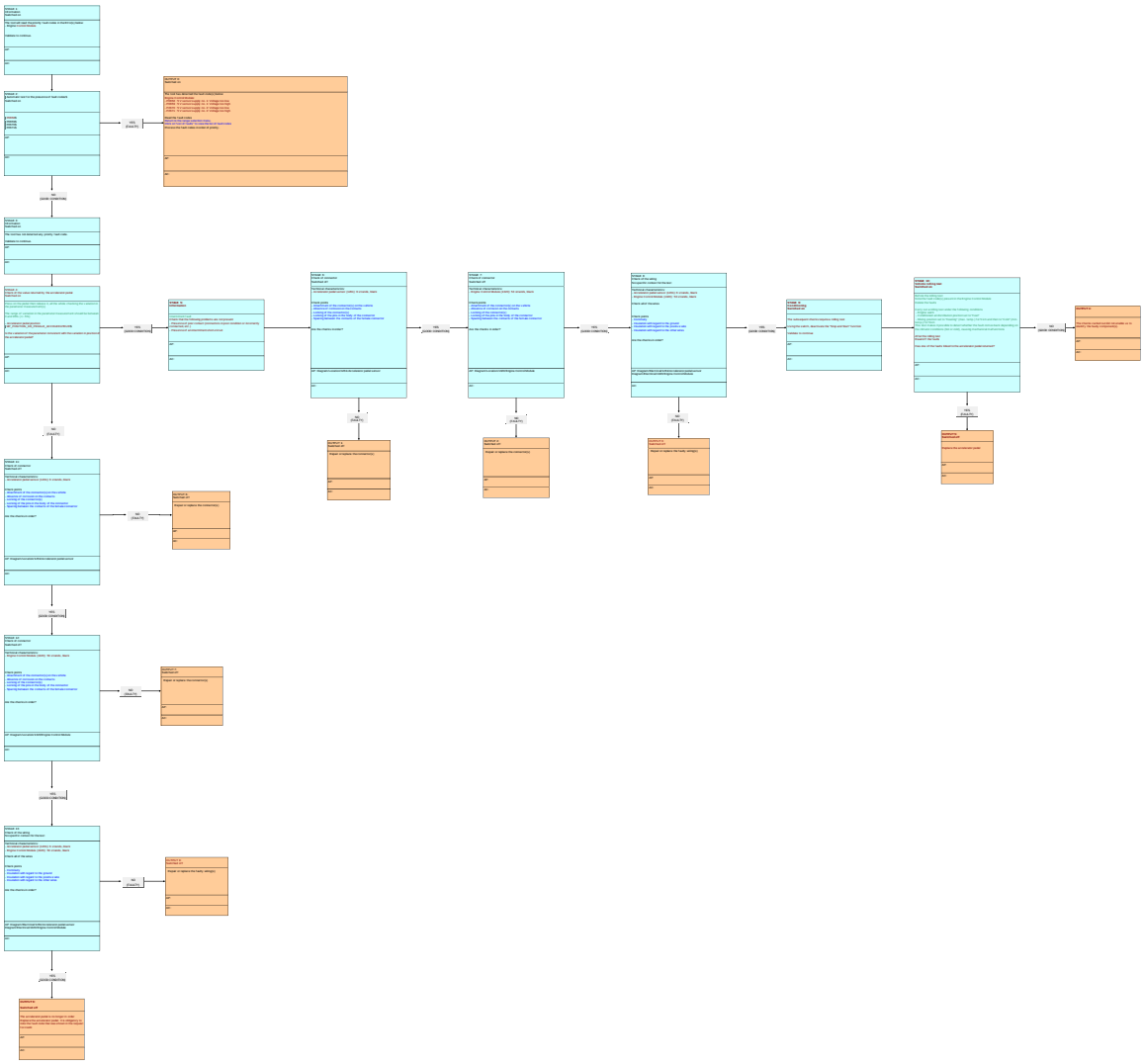

INFORMATION : FAULT CODE P0223 (ENGINE MANAGEMENT ECU)

SPECIAL FEATURE :

FOR : 1CB7 - B0FBM : DV6C TURBO DIESEL

FOR : 1CX7 - B0FBM : DV6C TURBO DIESEL

FOR : 1C58 - B0FBM : DV6C TURBO DIESEL

FOR : 1PT7 - B0FBM : DV6C TURBO DIESEL

FOR : 1PW2 - B0FBM : DV6C TURBO DIESEL

FOR : 1CB8 - B0FBM : DV6C TURBO DIESEL

FOR : 1CXA - B0FBM : DV6C TURBO DIESEL

FOR : 1CYA - B0FBM : DV6C TURBO DIESEL

FOR : 1PTB - B0FBM : DV6C TURBO DIESEL

FOR : 1PTC - B0FBM : DV6C TURBO DIESEL

FOR : 1PIA - B0FBM : DV6C TURBO DIESEL

FOR : 1CMJ - B0FBM : DV6C TURBO DIESEL

FOR : 1PMJ - B0FBM : DV6C TURBO DIESEL

Engine ECU CONTINENTAL SID 807 branch 2	
Fault code	P0223
After sales description of the fault code	Measurement of the accelerator pedal position : Short-circuit to positive or open circuit on the signal from track 1
Description of the diagnostics	Voltage higher than 4,8 V for 200 ms
Conditions of activation of the diagnostics	Engine running
Conditions of disappearance of the fault	Driving for 5 minutes with several full load accelerations for 10 seconds followed by releases of the pedal
Down-grade modes if fault present	Irreversible deactivation of the vehicle speed limiter
	Irreversible deactivation of the vehicle cruise control
	Deactivation of taking account of the tight spot information
	Application of the mode "voluntary downgrade of performance"
	Deactivation of the "easy-move" (electric parking brake)

	functionality
Switching on of the warning lamp and/or warning message	"SERVICE" warning lamp
Main customer complaints likely	-
Suspect areas	Accelerator pedal
	Electrical harness
	Connectors

Fault code(s): P0222 or P0223 or P0227 or P0228 or P2137

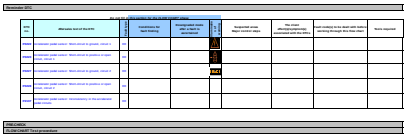

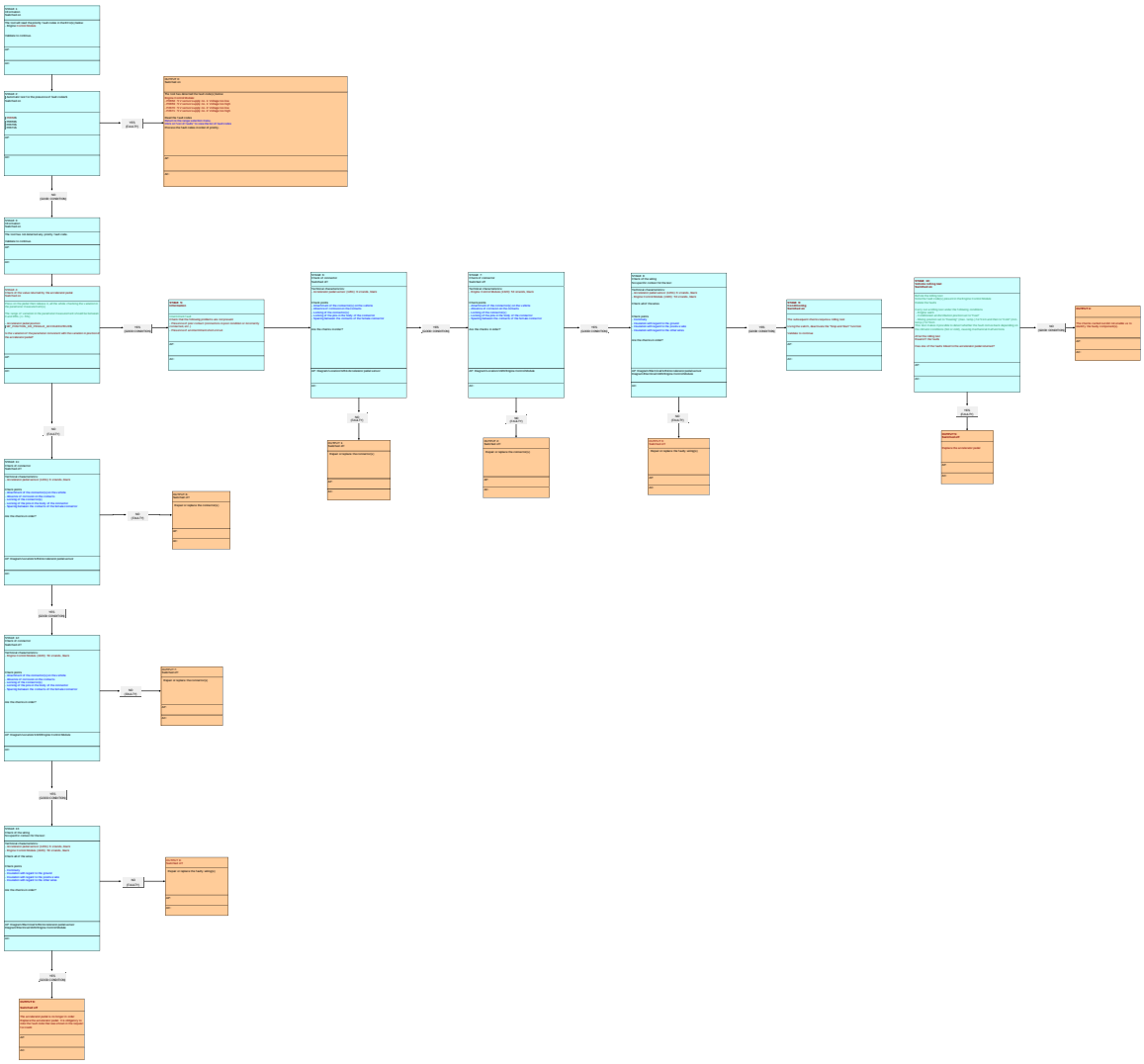

INFORMATION : FAULT CODE P0227 (ENGINE MANAGEMENT ECU)

SPECIAL FEATURE :

FOR : 1CB7 - B0FBM : DV6C TURBO DIESEL

FOR : 1CX7 - B0FBM : DV6C TURBO DIESEL

FOR : 1C58 - B0FBM : DV6C TURBO DIESEL

FOR : 1PT7 - B0FBM : DV6C TURBO DIESEL

FOR : 1PW2 - B0FBM : DV6C TURBO DIESEL

FOR : 1CB8 - B0FBM : DV6C TURBO DIESEL

FOR : 1CXA - B0FBM : DV6C TURBO DIESEL

FOR : 1CYA - B0FBM : DV6C TURBO DIESEL

FOR : 1PTB - B0FBM : DV6C TURBO DIESEL

FOR : 1PTC - B0FBM : DV6C TURBO DIESEL

FOR : 1PIA - B0FBM : DV6C TURBO DIESEL

FOR : 1CMJ - B0FBM : DV6C TURBO DIESEL

FOR : 1PMJ - B0FBM : DV6C TURBO DIESEL

Engine ECU CONTINENTAL SID 807 branch 2	
Fault code	P0227
After sales description of the fault code	Measurement of the accelerator pedal position : Track 2 signal short circuit to earth
Description of the diagnostics	Voltage less than 0,1 V for 200 ms
Conditions of activation of the diagnostics	Engine running
Conditions of disappearance of the fault	Driving for 5 minutes with several full load accelerations for 10 seconds followed by releases of the pedal
Down-grade modes if fault present	Irreversible deactivation of the vehicle speed limiter
	Irreversible deactivation of the vehicle cruise control
	Deactivation of taking account of the tight spot information
	Application of the mode "voluntary downgrade of performance"
	Deactivation of the "easy-move" (electric parking brake) functionality

Switching on of the warning lamp and/or warning message	"SERVICE" warning lamp
Main customer complaints likely	-
Suspect areas	Accelerator pedal
	Electrical harness
	Connectors

Fault code(s): P0222 or P0223 or P0227 or P0228 or P2137

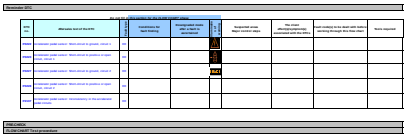

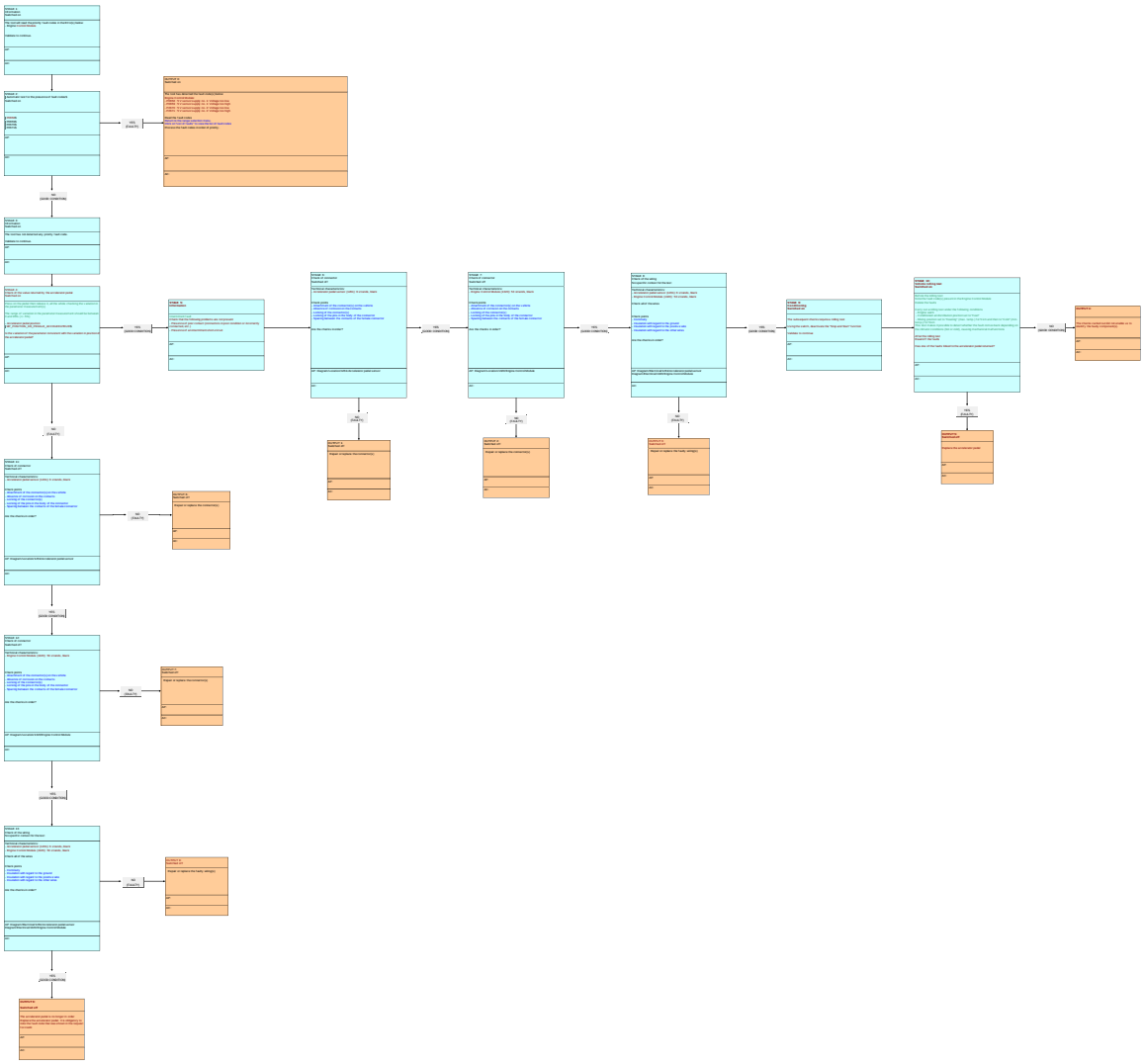

INFORMATION : FAULT CODE P0228 (ENGINE MANAGEMENT ECU)

SPECIAL FEATURE :

FOR : 1CB7 - B0FBM : DV6C TURBO DIESEL

FOR : 1CX7 - B0FBM : DV6C TURBO DIESEL

FOR : 1C58 - B0FBM : DV6C TURBO DIESEL

FOR : 1PT7 - B0FBM : DV6C TURBO DIESEL

FOR : 1PW2 - B0FBM : DV6C TURBO DIESEL

FOR : 1CB8 - B0FBM : DV6C TURBO DIESEL

FOR : 1CXA - B0FBM : DV6C TURBO DIESEL

FOR : 1CYA - B0FBM : DV6C TURBO DIESEL

FOR : 1PTB - B0FBM : DV6C TURBO DIESEL

FOR : 1PTC - B0FBM : DV6C TURBO DIESEL

FOR : 1PIA - B0FBM : DV6C TURBO DIESEL

FOR : 1CMJ - B0FBM : DV6C TURBO DIESEL

FOR : 1PMJ - B0FBM : DV6C TURBO DIESEL

Engine ECU CONTINENTAL SID 807 branch 2	
Fault code	P0228
After sales description of the fault code	Measurement of the accelerator pedal position : Short-circuit to positive or open circuit on the signal from track 2
Description of the diagnostics	Voltage higher than 4,8 V for 200 ms
Conditions of activation of the diagnostics	Engine running
Conditions of disappearance of the fault	Driving for 5 minutes with several full load accelerations for 10 seconds followed by releases of the pedal
Down-grade modes if fault present	Irreversible deactivation of the vehicle speed limiter
	Irreversible deactivation of the vehicle cruise control
	Deactivation of taking account of the tight spot information
	Application of the mode "voluntary downgrade of performance"
	Deactivation of the "easy-move" (electric parking brake)

	functionality
Switching on of the warning lamp and/or warning message	"SERVICE" warning lamp
Main customer complaints likely	-
Suspect areas	Accelerator pedal
	Electrical harness
	Connectors

Fault code(s): P0222 or P0223 or P0227 or P0228 or P2137

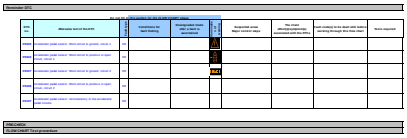

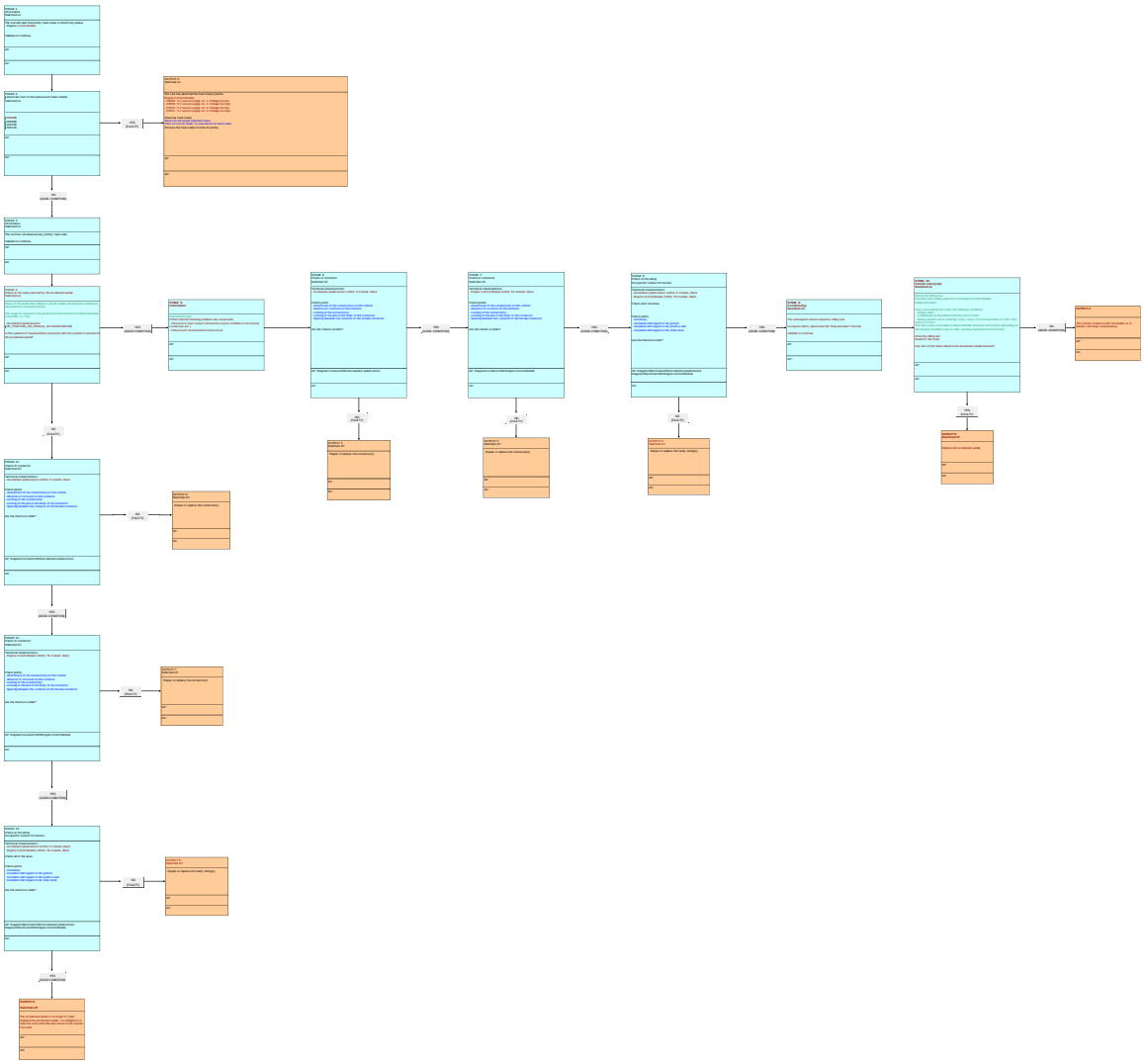

INFORMATION : FAULT CODE P0234 (ENGINE MANAGEMENT ECU)

SPECIAL FEATURE :

FOR : 1CB7 - B0FBM : DV6C TURBO DIESEL

FOR : 1CX7 - B0FBM : DV6C TURBO DIESEL

FOR : 1C58 - B0FBM : DV6C TURBO DIESEL

FOR : 1PT7 - B0FBM : DV6C TURBO DIESEL

FOR : 1PW2 - B0FBM : DV6C TURBO DIESEL

FOR : 1CB8 - B0FBM : DV6C TURBO DIESEL

FOR : 1CXA - B0FBM : DV6C TURBO DIESEL

FOR : 1CYA - B0FBM : DV6C TURBO DIESEL

FOR : 1PTB - B0FBM : DV6C TURBO DIESEL

FOR : 1PTC - B0FBM : DV6C TURBO DIESEL

FOR : 1PIA - B0FBM : DV6C TURBO DIESEL

FOR : 1CMJ - B0FBM : DV6C TURBO DIESEL

FOR : 1PMJ - B0FBM : DV6C TURBO DIESEL

Engine ECU CONTINENTAL SID 807 branch 2	
Fault code	P0234
After sales description of the fault code	Charge pressure regulation : Air pressure above the reference value
Description of the diagnostics	The turbocharged air pressure measured is 200 mbars higher than the reference value for 5 seconds for an engine speed between 2000 and 3000 rpm at full load (Thresholds weighted in relation to the engine speed, the load, the atmospheric pressure and the air temperature at the air flow sensor)
Conditions of activation of the diagnostics	The following conditions have to be met - Engine speed above 2000 rpm - Engine torque higher than 200Nm
Conditions of disappearance of the fault	3 drives in succession for 5 minutes with several full load accelerations for 10 seconds (Ignition off and restarting between each drive)

Down-grade modes if fault present	Closing of the EGR (exhaust gas recycling) valve
	Irreversible deactivation of the vehicle speed limiter
	Irreversible deactivation of the vehicle cruise control
	Deactivation of taking account of the tight spot information
	Switching of the turbocharging pressure regulation to controlled mode
	Switching to fuel "normal reduced flow" mode
	Deactivation of the request for regeneration of the particle filter from the diagnostic tool
	Sending of the information "torque uncertain" on the CAN network
Switching on of the warning lamp and/or warning message	Warning lamp MIL
	"SERVICE" warning lamp
Main customer complaints likely	Noise
	Slightly higher fuel consumption
	Lack of power
	Jerking/stalling
	Smoke from the exhaust
Suspect areas	Turbocharger
	Turbocharger variable geometry control solenoid valve
	Turbocharger variable geometry position repeat sensor
	Manifold air entry pressure sensor
	Air metering valve
	Air flow meter
	Electrical harnesses
	Connectors

Fault code(s): P0234

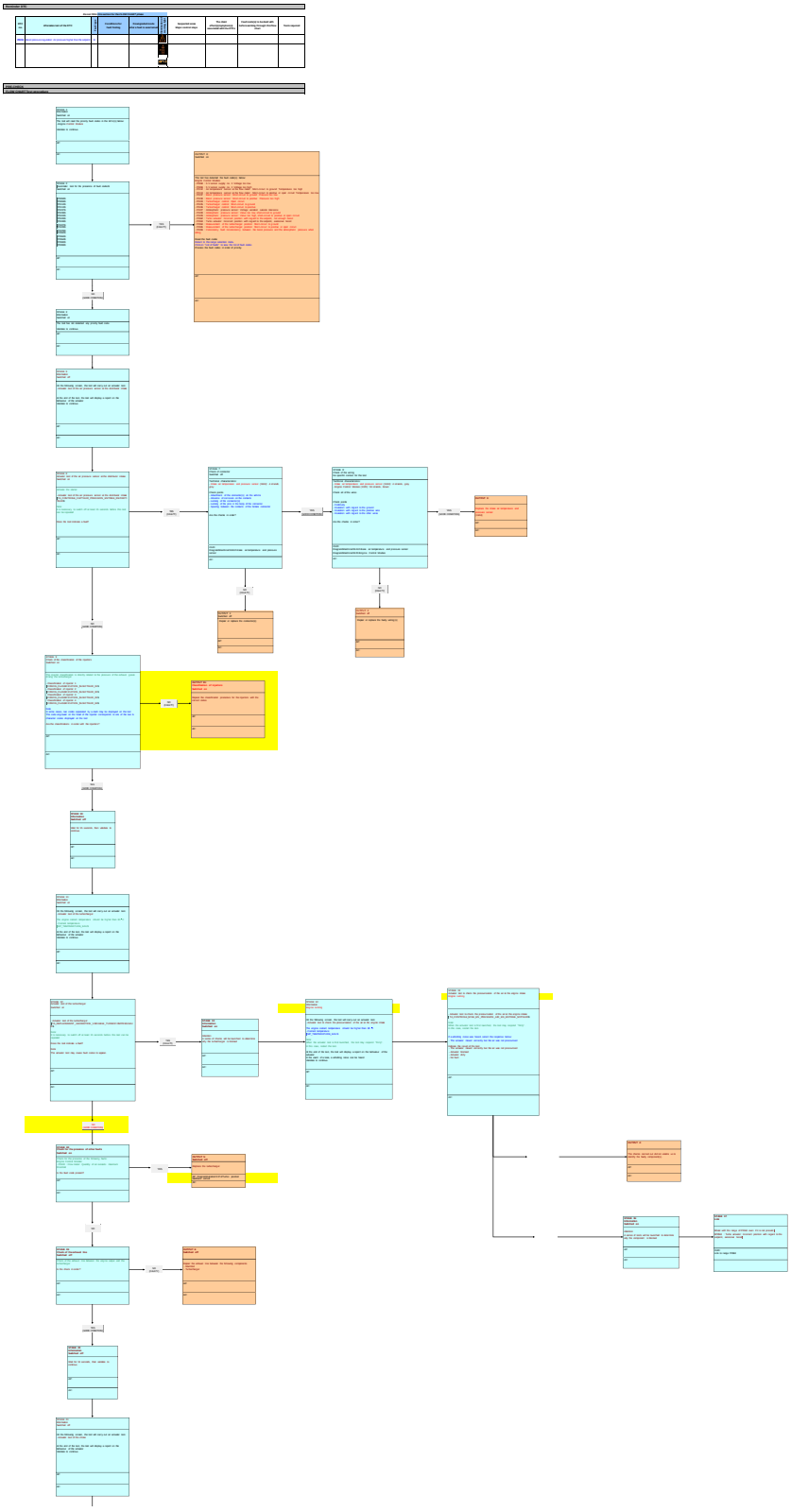

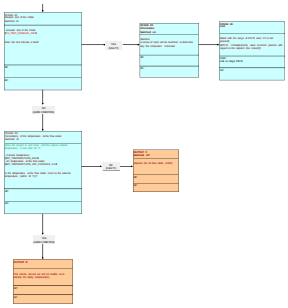

INFORMATION : FAULT CODE P0237 (ENGINE MANAGEMENT ECU)

SPECIAL FEATURE :

FOR : 1CB7 - B0FBM : DV6C TURBO DIESEL

FOR : 1CX7 - B0FBM : DV6C TURBO DIESEL

FOR : 1C58 - B0FBM : DV6C TURBO DIESEL

FOR : 1PT7 - B0FBM : DV6C TURBO DIESEL

FOR : 1PW2 - B0FBM : DV6C TURBO DIESEL

FOR : 1CB8 - B0FBM : DV6C TURBO DIESEL

FOR : 1CXA - B0FBM : DV6C TURBO DIESEL

FOR : 1CYA - B0FBM : DV6C TURBO DIESEL

FOR : 1PTB - B0FBM : DV6C TURBO DIESEL

FOR : 1PTC - B0FBM : DV6C TURBO DIESEL

FOR : 1PIA - B0FBM : DV6C TURBO DIESEL

FOR : 1CMJ - B0FBM : DV6C TURBO DIESEL

FOR : 1PMJ - B0FBM : DV6C TURBO DIESEL

Engine ECU CONTINENTAL SID 807 branch 2	
Fault code	P0237
After sales description of the fault code	Measurement of the manifold inlet pressure : Short circuit to earth : Pressure too low
Description of the diagnostics	Voltage less than 0,1 V for 500 ms
Conditions of activation of the diagnostics	Ignition switched on
Conditions of disappearance of the fault	Driving for 5 minutes
Down-grade modes	Closing of the EGR (exhaust gas recycling) valve
	Irreversible deactivation of the vehicle speed limiter
	Irreversible deactivation of the vehicle cruise control
	Deactivation of taking account of the tight spot information
	Switching of the turbocharging pressure regulation to controlled mode

if fault present	Switching to fuel "normal reduced flow" mode
	Deactivation of the request for regeneration of the particle filter from the diagnostic tool
	Deactivation of the "easy-move" (electric parking brake) functionality
Switching on of the warning lamp and/or warning message	Warning lamp MIL
	"SERVICE" warning lamp
Main customer complaints likely	Jerking/stalling
	Lack of power
	Noise
Suspect areas	Manifold air entry pressure sensor
	Electrical harness
	Connectors

Fault code(s): P0237 or P0238

Reminder DTC

Do not fill in this section for the FLOW CHART phase

DTC no.	Alternates text of the DTC	Fault type	Conditions for fault finding	Downgraded mode after a fault is ascertained	Warning lamp (if warning lamp is on)	Suspected areas Major control steps	The client effect(s)(symptom(s) associated with the DTC)	Fault code(s) to be dealt with before working through this flow chart	Tools required
P0237	Boost pressure sensor: Short circuit to ground: Pressure too low	00							
P0238	Boost pressure sensor: Short circuit to positive or open circuit: Pressure too high	00							

PRE-CHECK
FLOW CHART Test procedure

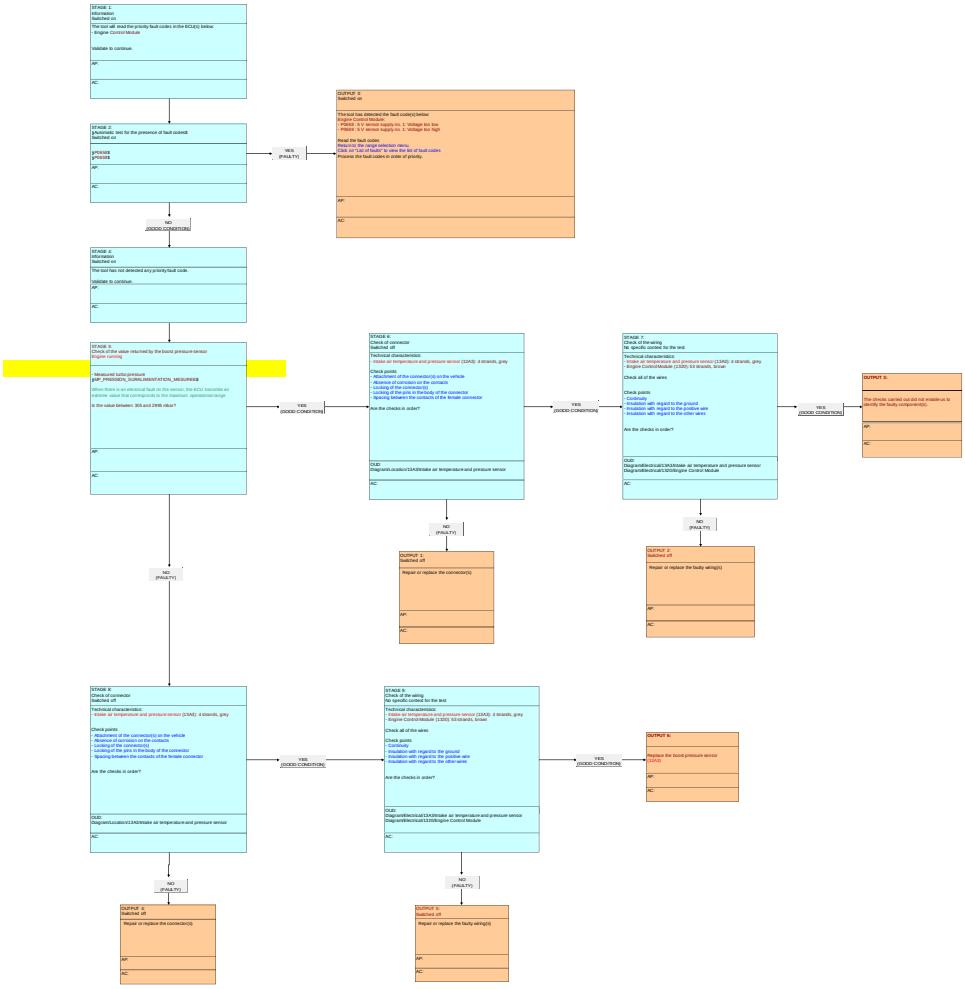

INFORMATION : FAULT CODE P0238 (ENGINE MANAGEMENT ECU)

SPECIAL FEATURE :

FOR : 1CB7 - B0FBM : DV6C TURBO DIESEL

FOR : 1CX7 - B0FBM : DV6C TURBO DIESEL

FOR : 1C58 - B0FBM : DV6C TURBO DIESEL

FOR : 1PT7 - B0FBM : DV6C TURBO DIESEL

FOR : 1PW2 - B0FBM : DV6C TURBO DIESEL

FOR : 1CB8 - B0FBM : DV6C TURBO DIESEL

FOR : 1CXA - B0FBM : DV6C TURBO DIESEL

FOR : 1CYA - B0FBM : DV6C TURBO DIESEL

FOR : 1PTB - B0FBM : DV6C TURBO DIESEL

FOR : 1PTC - B0FBM : DV6C TURBO DIESEL

FOR : 1PIA - B0FBM : DV6C TURBO DIESEL

FOR : 1CMJ - B0FBM : DV6C TURBO DIESEL

FOR : 1PMJ - B0FBM : DV6C TURBO DIESEL

Engine ECU CONTINENTAL SID 807 branch 2	
Fault code	P0238
After sales description of the fault code	Measurement of the manifold inlet pressure : Short circuit to positive or open circuit : Pressure too high
Description of the diagnostics	Voltage higher than 4,8 V for 500 ms
Conditions of activation of the diagnostics	Ignition switched on
Conditions of disappearance of the fault	Driving for 5 minutes
Down-grade modes	Closing of the EGR (exhaust gas recycling) valve
	Irreversible deactivation of the vehicle speed limiter
	Irreversible deactivation of the vehicle cruise control
	Deactivation of taking account of the tight spot information
	Switching of the turbocharging pressure regulation to controlled mode

if fault present	Switching to fuel "normal reduced flow" mode
	Deactivation of the request for regeneration of the particle filter from the diagnostic tool
	Deactivation of the "easy-move" (electric parking brake) functionality
Switching on of the warning lamp and/or warning message	Warning lamp MIL
	"SERVICE" warning lamp
Main customer complaints likely	Jerking/stalling
	Lack of power
	Noise
Suspect areas	Manifold air entry pressure sensor
	Electrical harness
	Connectors

Fault code(s): P0237 or P0238

Reminder DTC

Do not fill in this section for the FLOW CHART phase

DTC no.	Alternates text of the DTC	Fault type	Conditions for fault finding	Downgraded mode after a fault is ascertained	Driving safety risk	Suspected areas Major control steps	The client effect(s)/symptom(s) associated with the DTC	Fault code(s) to be dealt with before working through this flow chart	Tools required
P0237	Boost pressure sensor: Short circuit to ground: Pressure too low	00							
P0238	Boost pressure sensor: Short circuit to positive or open circuit: Pressure too high	00							

PRE-CHECK

FLOW CHART Test procedure

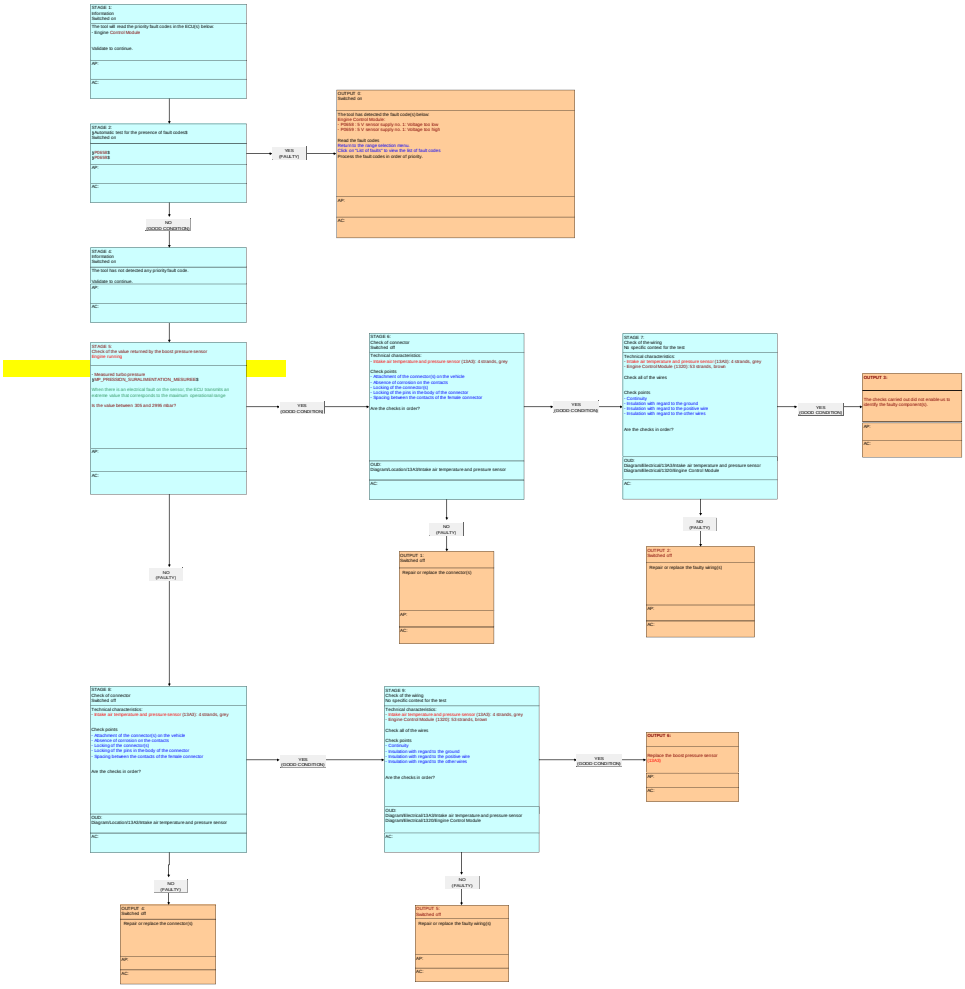

INFORMATION : FAULT CODE P0243 (ENGINE MANAGEMENT ECU)

SPECIAL FEATURE :

FOR : 1CB7 - B0FBM : DV6C TURBO DIESEL

FOR : 1CX7 - B0FBM : DV6C TURBO DIESEL

FOR : 1C58 - B0FBM : DV6C TURBO DIESEL

FOR : 1PT7 - B0FBM : DV6C TURBO DIESEL

FOR : 1PW2 - B0FBM : DV6C TURBO DIESEL

FOR : 1CB8 - B0FBM : DV6C TURBO DIESEL

FOR : 1CXA - B0FBM : DV6C TURBO DIESEL

FOR : 1CYA - B0FBM : DV6C TURBO DIESEL

FOR : 1PTB - B0FBM : DV6C TURBO DIESEL

FOR : 1PTC - B0FBM : DV6C TURBO DIESEL

FOR : 1PIA - B0FBM : DV6C TURBO DIESEL

FOR : 1CMJ - B0FBM : DV6C TURBO DIESEL

FOR : 1PMJ - B0FBM : DV6C TURBO DIESEL

Engine ECU CONTINENTAL SID 807 branch 2	
Fault code	P0243
After sales description of the fault code	Turbocharger control : Open circuit
Description of the diagnostics	Electrical fault detected immediately
Conditions of activation of the diagnostics	Ignition switched on
Conditions of disappearance of the fault	Driving for 5 minutes
Down-grade modes if fault present	Closing of the EGR (exhaust gas recycling) valve
	Irreversible deactivation of the vehicle speed limiter
	Irreversible deactivation of the vehicle cruise control
	Deactivation of taking account of the tight spot information
	Switching of the turbocharging pressure regulation to controlled mode
	Deactivation of the request for regeneration of the

	particle filter from the diagnostic tool
	Sending of the information "torque uncertain" on the CAN network
Switching on of the warning lamp and/or warning message	Warning lamp MIL
Main customer complaints likely	Lack of power
	Smoke from the exhaust
	Noise
Suspect areas	Turbocharger variable geometry control solenoid valve
	Fuse
	Electrical harnesses
	Connectors

Fault code(s): P0243 or P0245 or P0246

Reminder DTC

Do not sit on this screen for the FLOW CHART phase

DTC no.	Aftertreatment of the DTC	Fuse type	Conditions for fault finding	Downgraded mode after a fault is memorized	Driver warning lamp	Suspected areas Major control steps	The client ePro+(DQ)symptom(s) associated with the DTC's	Fault code(s) to be dealt with before working through this flow chart	Tools required
P0243	Turbocharger actuator control: Open circuit	NA							
P0245	Turbocharger actuator control: Short-circuit to ground	NA							
P0246	Turbocharger actuator control: Short-circuit to positive	NA							

PRE-CHECK

FLOW CHART Test procedure

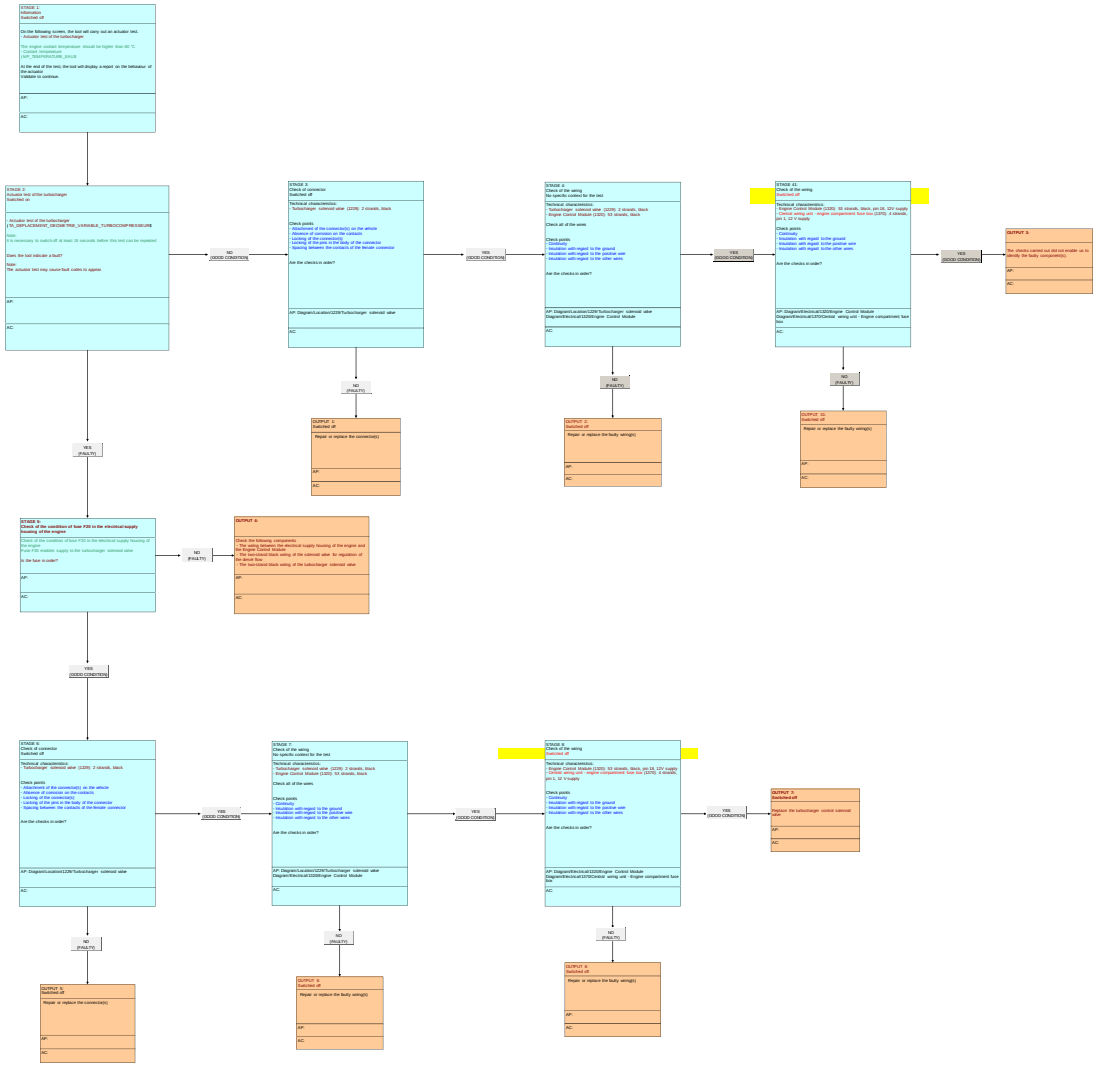

INFORMATION : FAULT CODE P0245 (ENGINE MANAGEMENT ECU)

SPECIAL FEATURE :

FOR : 1CB7 - B0FBM : DV6C TURBO DIESEL

FOR : 1CX7 - B0FBM : DV6C TURBO DIESEL

FOR : 1C58 - B0FBM : DV6C TURBO DIESEL

FOR : 1PT7 - B0FBM : DV6C TURBO DIESEL

FOR : 1PW2 - B0FBM : DV6C TURBO DIESEL

FOR : 1CB8 - B0FBM : DV6C TURBO DIESEL

FOR : 1CXA - B0FBM : DV6C TURBO DIESEL

FOR : 1CYA - B0FBM : DV6C TURBO DIESEL

FOR : 1PTB - B0FBM : DV6C TURBO DIESEL

FOR : 1PTC - B0FBM : DV6C TURBO DIESEL

FOR : 1PIA - B0FBM : DV6C TURBO DIESEL

FOR : 1CMJ - B0FBM : DV6C TURBO DIESEL

FOR : 1PMJ - B0FBM : DV6C TURBO DIESEL

Engine ECU CONTINENTAL SID 807 branch 2	
Fault code	P0245
After sales description of the fault code	Turbocharger control : Short circuit to earth
Description of the diagnostics	Electrical fault detected immediately
Conditions of activation of the diagnostics	Ignition switched on
Conditions of disappearance of the fault	Driving for 5 minutes
Down-grade modes if fault present	Closing of the EGR (exhaust gas recycling) valve
	Irreversible deactivation of the vehicle speed limiter
	Irreversible deactivation of the vehicle cruise control
	Deactivation of taking account of the tight spot information
	Switching of the turbocharging pressure regulation to controlled mode

	Deactivation of the request for regeneration of the particle filter from the diagnostic tool
	Sending of the information "torque uncertain" on the CAN network
Switching on of the warning lamp and/or warning message	Warning lamp MIL
Main customer complaints likely	Noise
	Slightly higher fuel consumption
	Lack of power
Suspect areas	Turbocharger variable geometry control solenoid valve
	Electrical harnesses
	Connectors

Fault code(s): P0243 or P0245 or P0246

Reminder DTC

DTC no.	Aftertreatment of the DTC	Do not st... this excites for the FLOW CHART phase: Fault type	Conditions for fault finding	Downgraded mode after a fault is memorized	Illuminated warning lamp	Suspected areas Major control steps	The client observed symptom(s) associated with the DTC	Fault code(s) to be dealt with before working through this flow chart	Tools required
P0243	Turbocharger actuator control: Open circuit	5H							
P0245	Turbocharger actuator control: Short circuit to ground	5H							
P0246	Turbocharger actuator control: Short circuit to positive	5H			DPNOX				

PRE-CHECK

FLOW CHART Test procedure

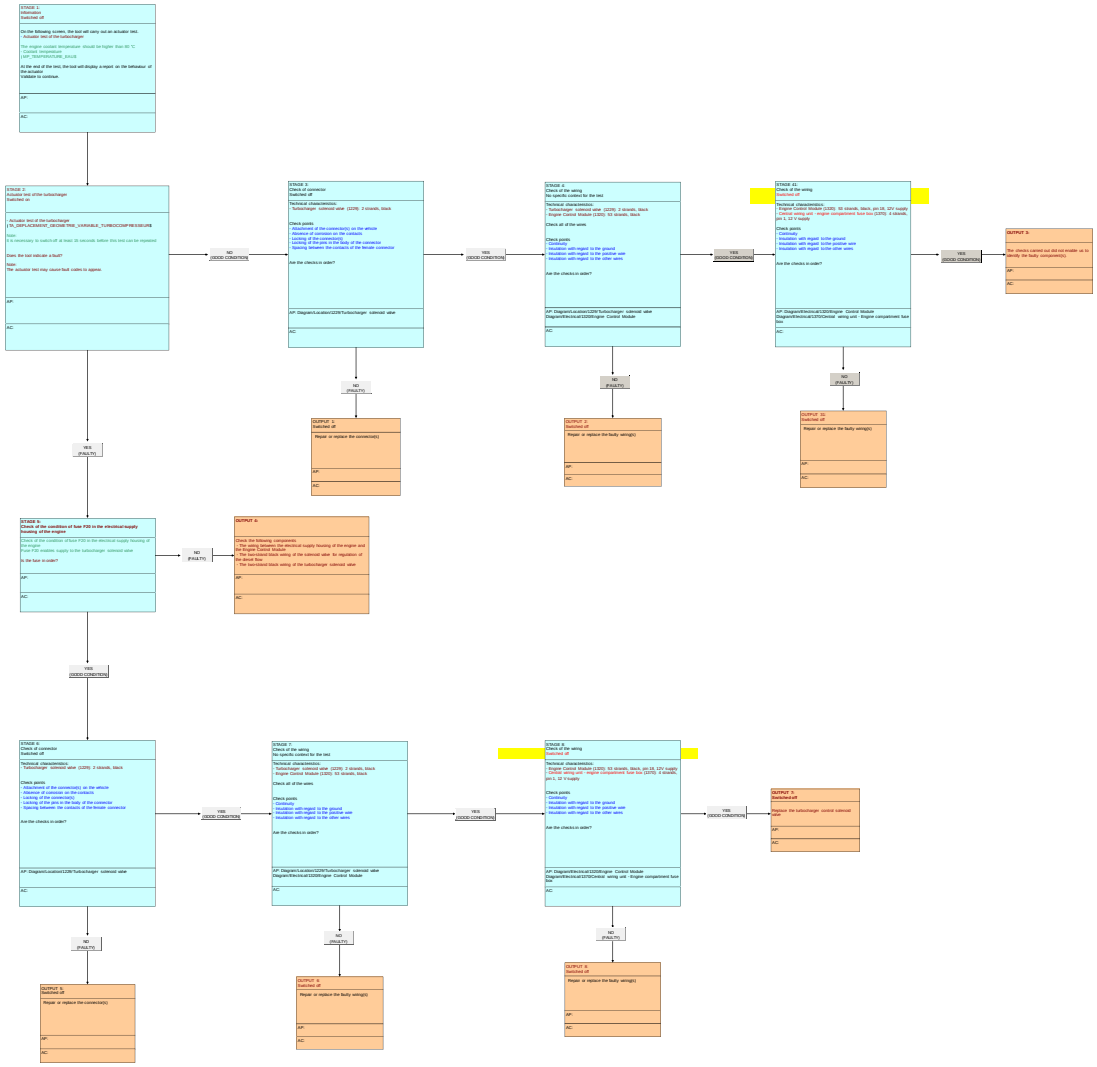

INFORMATION : FAULT CODE P0246 (ENGINE MANAGEMENT ECU)

SPECIAL FEATURE :

FOR : 1CB7 - B0FBM : DV6C TURBO DIESEL

FOR : 1CX7 - B0FBM : DV6C TURBO DIESEL

FOR : 1C58 - B0FBM : DV6C TURBO DIESEL

FOR : 1PT7 - B0FBM : DV6C TURBO DIESEL

FOR : 1PW2 - B0FBM : DV6C TURBO DIESEL

FOR : 1CB8 - B0FBM : DV6C TURBO DIESEL

FOR : 1CXA - B0FBM : DV6C TURBO DIESEL

FOR : 1CYA - B0FBM : DV6C TURBO DIESEL

FOR : 1PTB - B0FBM : DV6C TURBO DIESEL

FOR : 1PTC - B0FBM : DV6C TURBO DIESEL

FOR : 1PIA - B0FBM : DV6C TURBO DIESEL

FOR : 1CMJ - B0FBM : DV6C TURBO DIESEL

FOR : 1PMJ - B0FBM : DV6C TURBO DIESEL

Engine ECU CONTINENTAL SID 807 branch 2	
Fault code	P0246
After sales description of the fault code	Turbocharger control : Short circuit to positive
Description of the diagnostics	Electrical fault detected immediately
Conditions of activation of the diagnostics	Ignition switched on
Conditions of disappearance of the fault	Driving for 5 minutes
Down-grade modes if fault present	Closing of the EGR (exhaust gas recycling) valve
	Irreversible deactivation of the vehicle speed limiter
	Irreversible deactivation of the vehicle cruise control
	Deactivation of taking account of the tight spot information
	Switching of the turbocharging pressure regulation to controlled mode
	Deactivation of the request for regeneration of the

	particle filter from the diagnostic tool
	Sending of the information "torque uncertain" on the CAN network
Switching on of the warning lamp and/or warning message	Warning lamp MIL
Main customer complaints likely	Lack of power
	Smoke from the exhaust
	Noise
Suspect areas	Turbocharger variable geometry control solenoid valve
	Electrical harness
	Connectors

Fault code(s): P0243 or P0245 or P0246

Reminder DTC

Do not sit on this section for the FLOW CHART phase

DTC no.	Aftermarket text of the DTC	Fail type	Conditions for fault finding	Downgraded mode after a fault is memorized	Driving safety risk	Suspected areas Major control steps	The client effects(Symptoms) associated with the DTCs	Fault code(s) to be dealt with before working through this flow chart	Tools required
P0243	Turbocharger actuator control: Open circuit	SC							
P0245	Turbocharger actuator control: Short circuit to ground	SC							
P0246	Turbocharger actuator control: Short circuit to positive	SC							

PRE-CHECK

FLOW CHART Test procedure

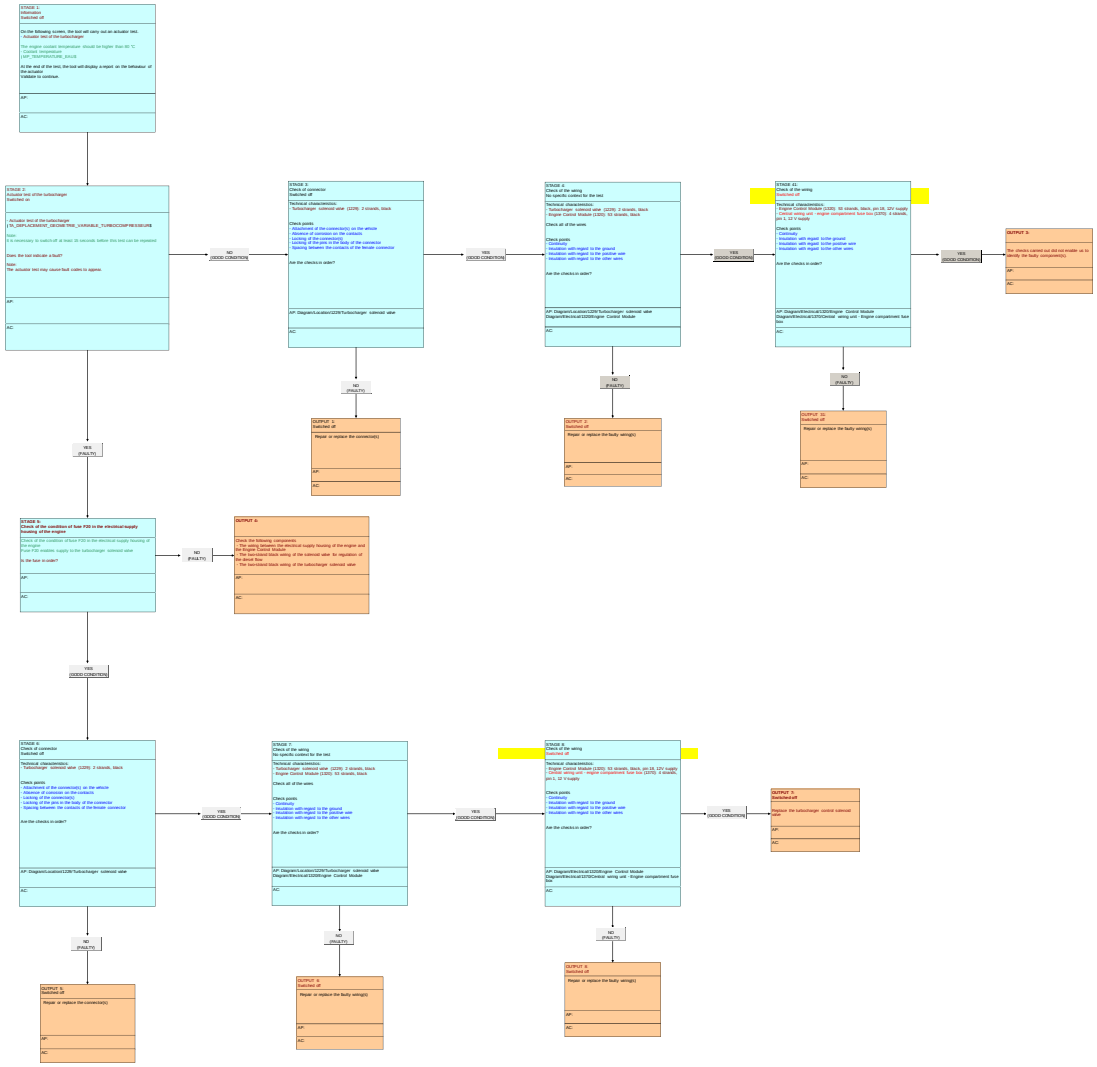

INFORMATION : FAULT CODE P0262 (ENGINE MANAGEMENT ECU)

SPECIAL FEATURE :

FOR : 1CB7 - B0FBM : DV6C TURBO DIESEL

FOR : 1CX7 - B0FBM : DV6C TURBO DIESEL

FOR : 1C58 - B0FBM : DV6C TURBO DIESEL

FOR : 1PT7 - B0FBM : DV6C TURBO DIESEL

FOR : 1PW2 - B0FBM : DV6C TURBO DIESEL

FOR : 1CB8 - B0FBM : DV6C TURBO DIESEL

FOR : 1CXA - B0FBM : DV6C TURBO DIESEL

FOR : 1CYA - B0FBM : DV6C TURBO DIESEL

FOR : 1PTB - B0FBM : DV6C TURBO DIESEL

FOR : 1PTC - B0FBM : DV6C TURBO DIESEL

FOR : 1PIA - B0FBM : DV6C TURBO DIESEL

FOR : 1CMJ - B0FBM : DV6C TURBO DIESEL

FOR : 1PMJ - B0FBM : DV6C TURBO DIESEL

Engine ECU CONTINENTAL SID 807 branch 2	
Fault code	P0262
After sales description of the fault code	Injector 1 signal. : Short circuit between two wires
Description of the diagnostics	Short circuit between the 2 tracks detected for 400 ms when injector 1 is controlled
Conditions of activation of the diagnostics	Ignition switched on
Conditions of disappearance of the fault	Driving for 5 minutes
	Closing of the EGR (exhaust gas recycling) valve
	Irreversible deactivation of the vehicle speed limiter
	Irreversible deactivation of the vehicle cruise control
	Deactivation of taking account of the tight spot information
	Switching of the turbocharging pressure regulation to controlled mode

Down-grade modes if fault present	Deactivation of the request for regeneration of the particle filter from the diagnostic tool
	Cutting of fuel injector 1
	Deactivation of the "easy-move" (electric parking brake) functionality
	For a gearbox with engine speed regulation (automatic gearbox or piloted manual gearbox), limitation of the torque sent to the gearbox
Switching on of the warning lamp and/or warning message	Warning lamp MIL
Main customer complaints likely	Jerking/stalling
	Engine acceleration at wrong time
	Noise
	Slightly higher fuel consumption
	Starting problem
	Smoke from the exhaust
	Lack of power
Suspect areas	Fuel injector 1
	Electrical harness
	Connectors

Fault code(s): P0201 or P0202 or P0203 or P0204 or P0262 or P0265 or P0268 or P0271 or P062D or P1641 or P2146 or P2148

Reminder DTC

Do not fill in this section for the FLOW CHART phase

DTC no.	Aftersales text of the DTC	Priority	Conditions for fault finding	Downgraded mode after a fault is ascertained	Operating safety (Operating safety)	Suspected areas Major control steps	The client effects(symptomatic) associated with the DTCs	Fault code(s) to be dealt with before working through this flow chart	Tools required
P0201	Control of injector 1: Open circuit on the circuit (wiring, injector, ECU)	A							
P0202	Control of injector 2: Open circuit on the circuit (wiring, injector, ECU)	A							
P0203	Control of injector 3: Open circuit on the circuit (wiring, injector, ECU)	A							
P0204	Control of injector 4: Open circuit on the circuit (wiring, injector, ECU)	A							
P0262	Control of injector 1: Short-circuit to positive on the circuit (wiring, injector, ECU)	A							
P0265	Control of injector 2: Short-circuit to positive on the circuit (wiring, injector, ECU)	A							
P0268	Control of injector 3: Short-circuit to positive on the circuit (wiring, injector, ECU)	A							
P0271	Control of injector 4: Short-circuit to positive on the circuit (wiring, injector, ECU)	A							
P062D	ECU voltage converter for control of the injectors faulty on bank 1	A							
P1641	ECU initialisation malfunction of the injector bank or wiring fault	A							
P2146	Injector control: injection bank 1: short-circuit	A							
P2148	Injector control: injection bank 1: voltage too high	A							

PRE-CHECK

FLOW CHART Test procedure

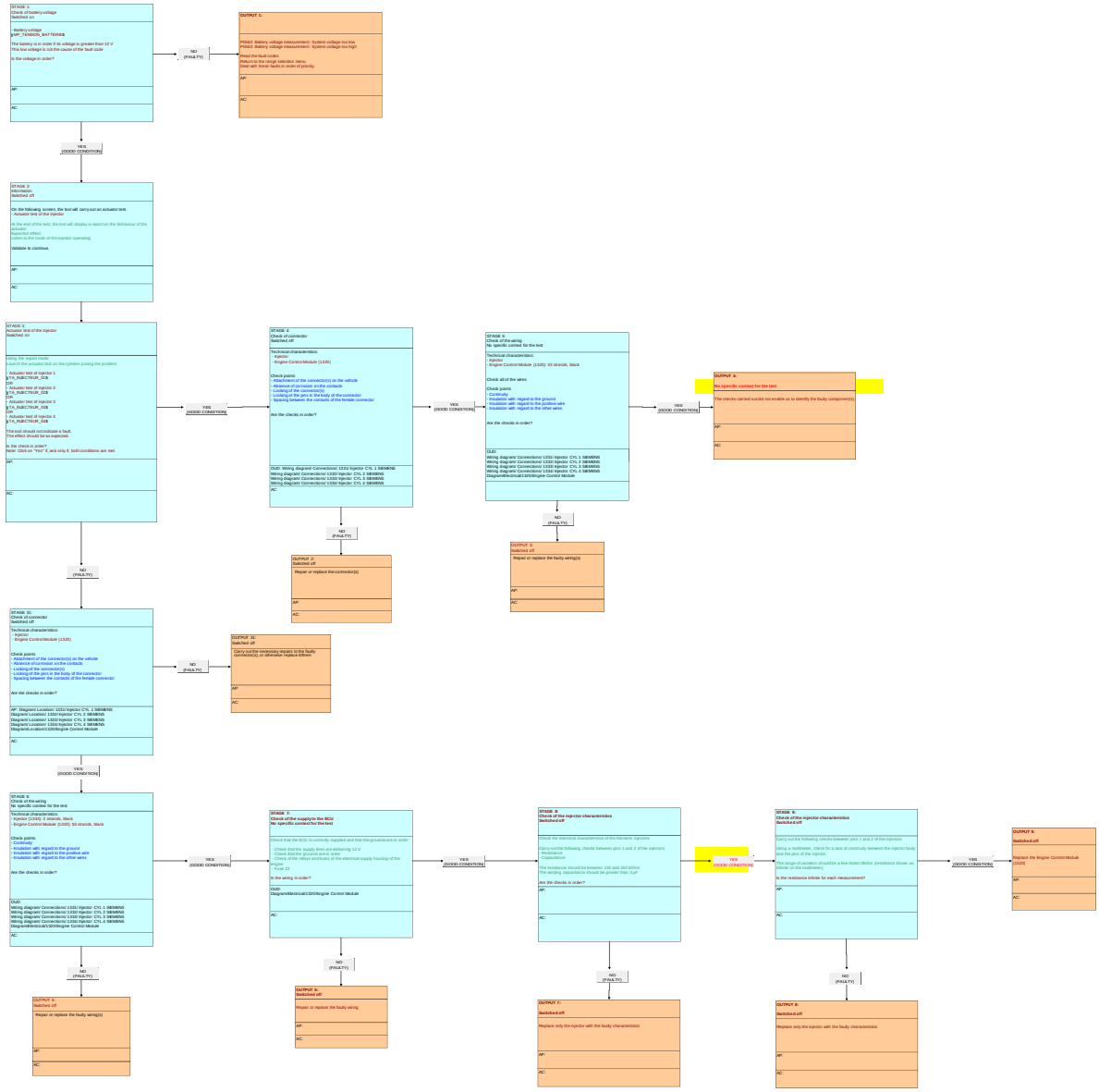

INFORMATION : FAULT CODE P0263 (ENGINE MANAGEMENT ECU)

SPECIAL FEATURE :

FOR : 1CB7 - B0FBM : DV6C TURBO DIESEL

FOR : 1CX7 - B0FBM : DV6C TURBO DIESEL

FOR : 1C58 - B0FBM : DV6C TURBO DIESEL

FOR : 1PT7 - B0FBM : DV6C TURBO DIESEL

FOR : 1PW2 - B0FBM : DV6C TURBO DIESEL

FOR : 1CB8 - B0FBM : DV6C TURBO DIESEL

FOR : 1CXA - B0FBM : DV6C TURBO DIESEL

FOR : 1CYA - B0FBM : DV6C TURBO DIESEL

FOR : 1PTB - B0FBM : DV6C TURBO DIESEL

FOR : 1PTC - B0FBM : DV6C TURBO DIESEL

FOR : 1PIA - B0FBM : DV6C TURBO DIESEL

FOR : 1CMJ - B0FBM : DV6C TURBO DIESEL

FOR : 1PMJ - B0FBM : DV6C TURBO DIESEL

Engine ECU CONTINENTAL SID 807 branch 2	
Fault code	P0263
After sales description of the fault code	No. 1 cylinder : Injector resetting outside tolerance
Description of the diagnostics	Difference of more than 0,8 mg/stroke between the pilot injection and the flow reference value
Conditions of activation of the diagnostics	engine running
Conditions of disappearance of the fault	The following conditions have to be met - Engine hot, water temperature exceeding 70 °C - External air temperature greater than 0°C - Gear higher than 3rd - Vehicle speed higher than 40 km/h

	- Perform long decelerations without braking (Between 2500 and 1500 rpm)
Down-grade modes if fault present	-
Switching on of the warning lamp and/or warning message	-
Main customer complaints likely	Jerking/stalling
	Engine acceleration at wrong time
	Noise
	Slightly higher fuel consumption
	Starting problem
	Smoke from the exhaust
	Lack of power
Suspect areas	Fuel injector 1
	Injector classification
	Poor quality of the fuel or type of fuel
	Fuel return
	Inlet valve - Exhaust valve - Spring - Seal
	Piston - Piston rings - Shaft - Cooling system
	Connecting rod

Fault code(s): P0263 or P0266 or P0269 or P0272

Reminder DTC

Do not fill in this section for the FLOW CHART phase

DTC no.	Aftersales text of the DTC	Fault type	Conditions for fault finding	Downgraded mode after a fault is ascertained	Illumination of driving aids	Suspected areas Major control steps	The client effect(s)/symptom(s) associated with the DTCs	Fault code(s) to be dealt with before working through this flow chart	Tools required
P0263	Control of injector 1: Correction of injector lag time outside the norm	B							
P0266	Control of injector 2: Correction of injector lag time outside the norm	B							
P0269	Control of injector 3: Correction of injector lag time outside the norm	B							
P0272	Control of injector 4: Correction of injector lag time outside the norm	B							

PRE-CHECK

FLOW CHART Test procedure

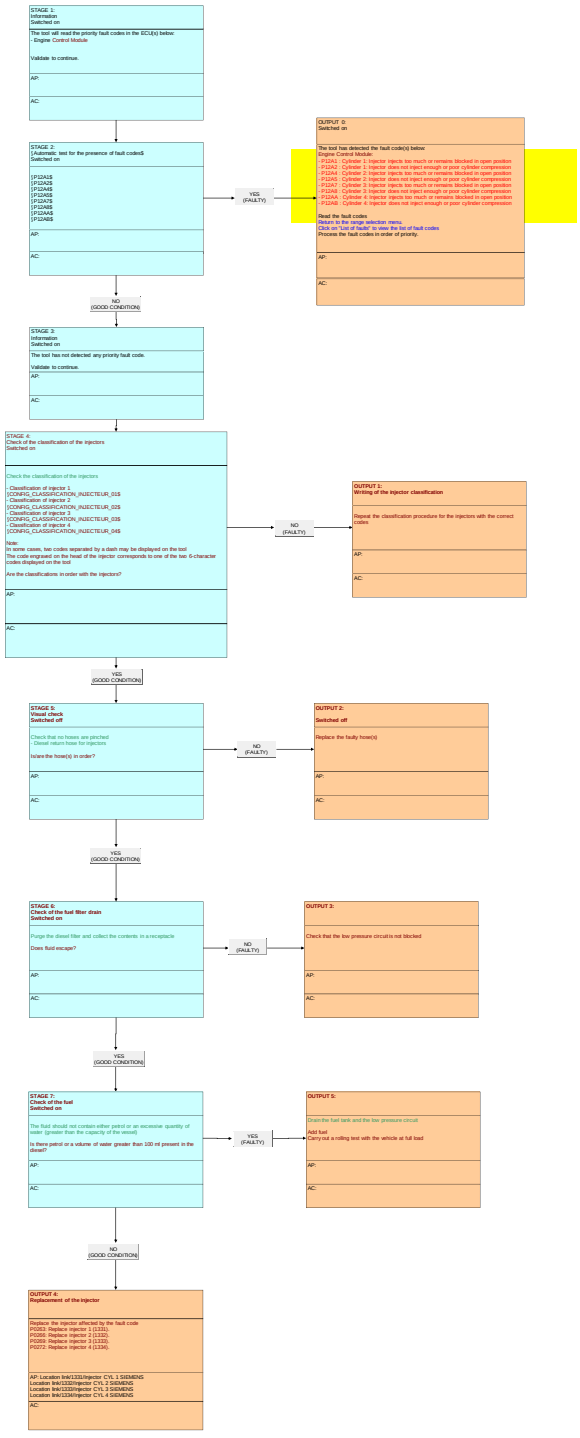

INFORMATION : FAULT CODE P0265 (ENGINE MANAGEMENT ECU)

SPECIAL FEATURE :

FOR : 1PMJ - B0FBM : DV6C TURBO DIESEL

FOR : 1CMJ - B0FBM : DV6C TURBO DIESEL

FOR : 1CB7 - B0FBM : DV6C TURBO DIESEL

FOR : 1CX7 - B0FBM : DV6C TURBO DIESEL

FOR : 1C58 - B0FBM : DV6C TURBO DIESEL

FOR : 1PT7 - B0FBM : DV6C TURBO DIESEL

FOR : 1PW2 - B0FBM : DV6C TURBO DIESEL

FOR : 1CB8 - B0FBM : DV6C TURBO DIESEL

FOR : 1CXA - B0FBM : DV6C TURBO DIESEL

FOR : 1CYA - B0FBM : DV6C TURBO DIESEL

FOR : 1PTB - B0FBM : DV6C TURBO DIESEL

FOR : 1PTC - B0FBM : DV6C TURBO DIESEL

FOR : 1PIA - B0FBM : DV6C TURBO DIESEL

Engine ECU CONTINENTAL SID 807 branch 2	
Fault code	P0265
After sales description of the fault code	Injector 2 signal.: Short circuit between two wires
Description of the diagnostics	Short circuit between the 2 tracks detected for 400 ms when injector 2 is controlled
Conditions of activation of the diagnostics	Ignition switched on
Conditions of disappearance of the fault	Driving for 5 minutes
	Closing of the EGR (exhaust gas recycling) valve
	Irreversible deactivation of the vehicle speed limiter
	Irreversible deactivation of the vehicle cruise control
	Deactivation of taking account of the tight spot information
	Switching of the turbocharging pressure regulation to controlled mode

Down-grade modes if fault present	Cutting of fuel injector 2
	Deactivation of the request for regeneration of the particle filter from the diagnostic tool
	Deactivation of the "easy-move" (electric parking brake) functionality
	For a gearbox with engine speed regulation (automatic gearbox or piloted manual gearbox), limitation of the torque sent to the gearbox
Switching on of the warning lamp and/or warning message	Warning lamp MIL
Main customer complaints likely	Jerking/stalling
	Engine acceleration at wrong time
	Noise
	Slightly higher fuel consumption
	Starting problem
	Smoke from the exhaust
	Lack of power
Suspect areas	Fuel injector 2
	Electrical harness
	Connectors

Fault code(s): P0201 or P0202 or P0203 or P0204 or P0262 or P0265 or P0268 or P0271 or P062D or P1641 or P2146 or P2148

Reminder DTC

Do not fill in this section for the FLOW CHART phase

DTC no.	Alternate text of the DTC	Priority	Conditions for fault finding	Downgraded mode after a fault is ascertained	Operating safety (Operating light)	Suspected areas Major control steps	The client effects(symptomatic) associated with the DTCs	Fault code(s) to be dealt with before working through this flow chart	Tools required
P0201	Control of injector 1: Open circuit on the circuit (wiring, injector, ECU)	A							
P0202	Control of injector 2: Open circuit on the circuit (wiring, injector, ECU)	A							
P0203	Control of injector 3: Open circuit on the circuit (wiring, injector, ECU)	A							
P0204	Control of injector 4: Open circuit on the circuit (wiring, injector, ECU)	A							
P0262	Control of injector 1: Short-circuit to positive on the circuit (wiring, injector, ECU)	A							
P0265	Control of injector 2: Short-circuit to positive on the circuit (wiring, injector, ECU)	A							
P0268	Control of injector 3: Short-circuit to positive on the circuit (wiring, injector, ECU)	A							
P0271	Control of injector 4: Short-circuit to positive on the circuit (wiring, injector, ECU)	A							
P062D	ECU voltage converter for control of the injectors faulty on bank 1	A							
P1641	ECU initialisation malfunction of the injector bank or wiring fault	A							
P2146	Injector control: injection bank 1: short-circuit	A							
P2148	Injector control: injection bank 1: voltage too high	A							

PRE-CHECK

FLOW CHART Test procedure

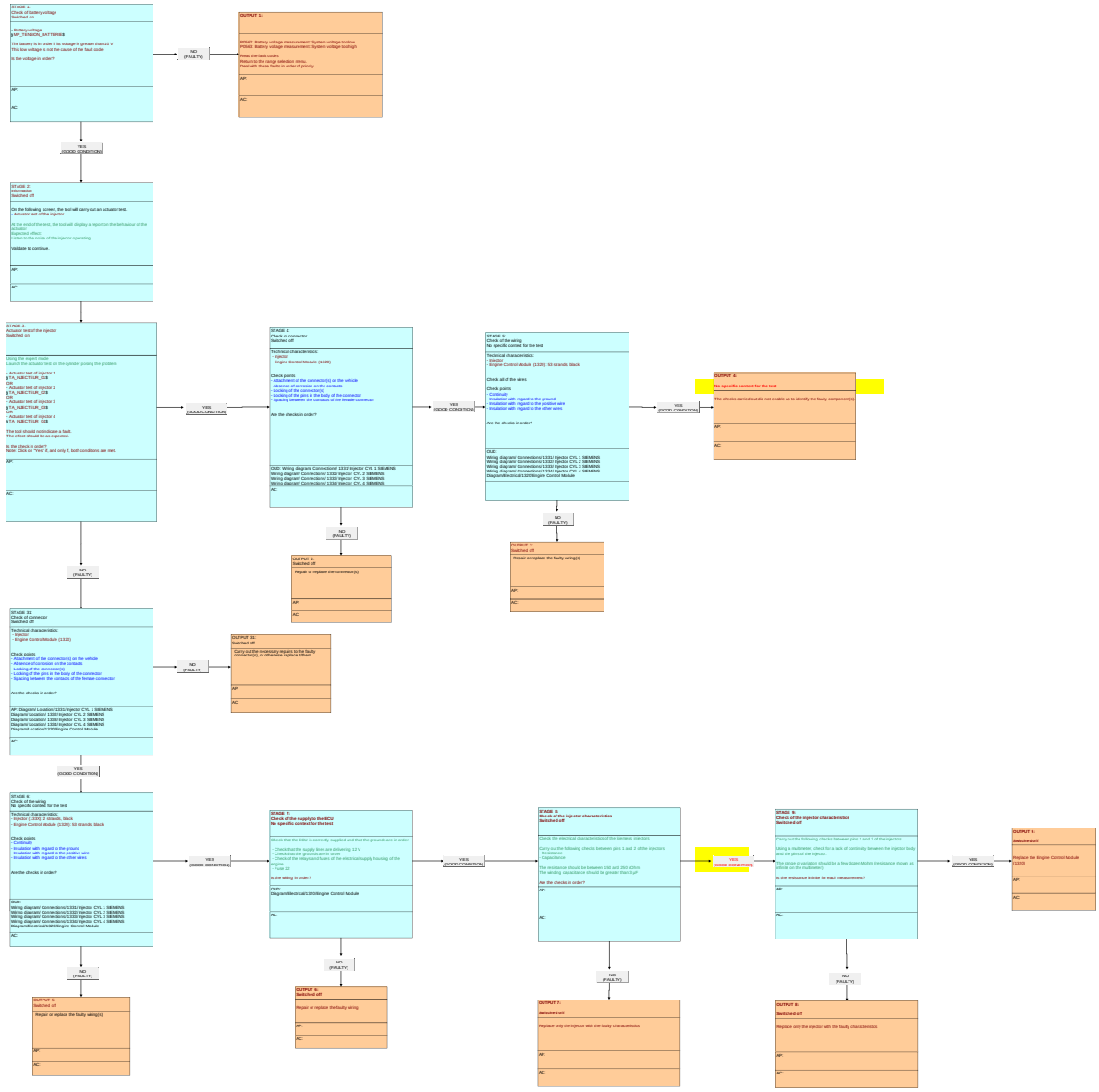

INFORMATION : FAULT CODE P0266 (ENGINE MANAGEMENT ECU)

SPECIAL FEATURE :

FOR : 1PMJ - B0FBM : DV6C TURBO DIESEL

FOR : 1CMJ - B0FBM : DV6C TURBO DIESEL

FOR : 1CB7 - B0FBM : DV6C TURBO DIESEL

FOR : 1CX7 - B0FBM : DV6C TURBO DIESEL

FOR : 1C58 - B0FBM : DV6C TURBO DIESEL

FOR : 1PT7 - B0FBM : DV6C TURBO DIESEL

FOR : 1PW2 - B0FBM : DV6C TURBO DIESEL

FOR : 1CB8 - B0FBM : DV6C TURBO DIESEL

FOR : 1CXA - B0FBM : DV6C TURBO DIESEL

FOR : 1CYA - B0FBM : DV6C TURBO DIESEL

FOR : 1PTB - B0FBM : DV6C TURBO DIESEL

FOR : 1PTC - B0FBM : DV6C TURBO DIESEL

FOR : 1PIA - B0FBM : DV6C TURBO DIESEL

Engine ECU CONTINENTAL SID 807 branch 2	
Fault code	P0266
After sales description of the fault code	No. 2 cylinder : Injector resetting outside tolerance
Description of the diagnostics	Difference of more than 0,8 mg/stroke between the pilot injection and the flow reference value
Conditions of activation of the diagnostics	Engine running
Conditions of disappearance of the fault	The following conditions have to be met - Engine hot (Coolant temperature above 70°C) - External air temperature greater than 0°C - Gear higher than 3rd - Vehicle speed higher than 40 km/h

	- Perform long decelerations without braking (Between 2500 and 1500 rpm)
Down-grade modes if fault present	-
Switching on of the warning lamp and/or warning message	-
Main customer complaints likely	Jerking/stalling
	Engine acceleration at wrong time
	Noise
	Slightly higher fuel consumption
	Starting problem
	Smoke from the exhaust
	Lack of power
Suspect areas	Fuel injector 2
	Injector classification
	Poor quality of the fuel or type of fuel
	Fuel return
	Inlet valve - Exhaust valve - Spring - Seal
	Piston - Piston rings - Shaft - Cooling system
	Connecting rod

Fault code(s): P0263 or P0266 or P0269 or P0272

Reminder DTC

Do not fill in this section for the FLOW CHART phase

DTC no.	Aftersales text of the DTC	Fault type	Conditions for fault finding	Downgraded mode after a fault is ascertained	Illumination of driving aids	Suspected areas Major control steps	The client effect(s)/symptom(s) associated with the DTCs	Fault code(s) to be dealt with before working through this flow chart	Tools required
P0263	Control of injector 1: Correction of injector lag time outside the norm	0							
P0266	Control of injector 2: Correction of injector lag time outside the norm	0							
P0269	Control of injector 3: Correction of injector lag time outside the norm	0							
P0272	Control of injector 4: Correction of injector lag time outside the norm	0							

PRE-CHECK

FLOW CHART Test procedure

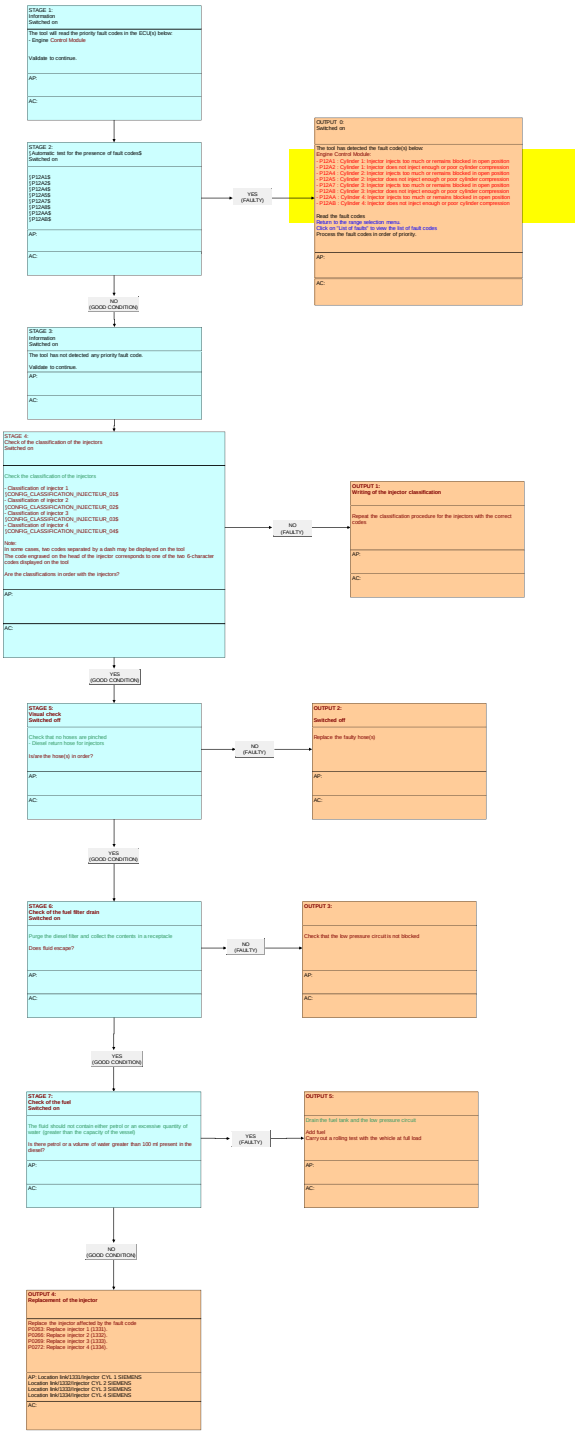

INFORMATION : FAULT CODE P0268 (ENGINE MANAGEMENT ECU)

SPECIAL FEATURE :

FOR : 1PMJ - B0FBM : DV6C TURBO DIESEL

FOR : 1CMJ - B0FBM : DV6C TURBO DIESEL

FOR : 1CB7 - B0FBM : DV6C TURBO DIESEL

FOR : 1CX7 - B0FBM : DV6C TURBO DIESEL

FOR : 1C58 - B0FBM : DV6C TURBO DIESEL

FOR : 1PT7 - B0FBM : DV6C TURBO DIESEL

FOR : 1PW2 - B0FBM : DV6C TURBO DIESEL

FOR : 1CB8 - B0FBM : DV6C TURBO DIESEL

FOR : 1CXA - B0FBM : DV6C TURBO DIESEL

FOR : 1CYA - B0FBM : DV6C TURBO DIESEL

FOR : 1PTB - B0FBM : DV6C TURBO DIESEL

FOR : 1PTC - B0FBM : DV6C TURBO DIESEL

FOR : 1PIA - B0FBM : DV6C TURBO DIESEL

Engine ECU CONTINENTAL SID 807 branch 2	
Fault code	P0268
After sales description of the fault code	Injector 3 signal. : Short circuit between two wires
Description of the diagnostics	Short circuit between the 2 tracks detected for 400 ms when injector 3 is controlled
Conditions of activation of the diagnostics	Ignition switched on
Conditions of disappearance of the fault	Driving for 5 minutes
	Closing of the EGR (exhaust gas recycling) valve
	Irreversible deactivation of the vehicle speed limiter
	Irreversible deactivation of the vehicle cruise control
	Deactivation of taking account of the tight spot information
	Switching of the turbocharging pressure regulation to controlled mode

Down-grade modes if fault present	Cutting of fuel injector 3
	Deactivation of the request for regeneration of the particle filter from the diagnostic tool
	Deactivation of the "easy-move" (electric parking brake) functionality
	For a gearbox with engine speed regulation (automatic gearbox or piloted manual gearbox), limitation of the torque sent to the gearbox
Switching on of the warning lamp and/or warning message	Warning lamp MIL
Main customer complaints likely	Jerking/stalling
	Engine acceleration at wrong time
	Noise
	Slightly higher fuel consumption
	Starting problem
	Smoke from the exhaust
	Lack of power
	Absence of automatic stopping of the internal combustion engine
	Problem with automatic restarting of the internal combustion engine (If the vehicle has the Stop and Start system)
Suspect areas	Fuel injector 3
	Electrical harness
	Connectors

Fault code(s): P0201 or P0202 or P0203 or P0204 or P0262 or P0265 or P0268 or P0271 or P062D or P1641 or P2146 or P2148

Reminder DTC

Do not fill in this section for the FLOW CHART phase

DTC no.	Alternate text of the DTC	Priority	Conditions for fault finding	Downgraded mode after a fault is ascertained	Operating safety (Operating safety)	Suspected areas Major control steps	The client effects(symptomatic) associated with the DTCs	Fault code(s) to be dealt with before working through this flow chart	Tools required
P0201	Control of injector 1: Open circuit on the circuit (wiring, injector, ECU)	A							
P0202	Control of injector 2: Open circuit on the circuit (wiring, injector, ECU)	A							
P0203	Control of injector 3: Open circuit on the circuit (wiring, injector, ECU)	A							
P0204	Control of injector 4: Open circuit on the circuit (wiring, injector, ECU)	A							
P0262	Control of injector 1: Short-circuit to positive on the circuit (wiring, injector, ECU)	A							
P0265	Control of injector 2: Short-circuit to positive on the circuit (wiring, injector, ECU)	A							
P0268	Control of injector 3: Short-circuit to positive on the circuit (wiring, injector, ECU)	A							
P0271	Control of injector 4: Short-circuit to positive on the circuit (wiring, injector, ECU)	A							
P062D	ECU voltage converter for control of the injectors faulty on bank 1	A							
P1641	ECU initialisation malfunction of the injector bank or wiring fault	A							
P2146	Injector control: injection bank 1: short-circuit	A							
P2148	Injector control: injection bank 1: voltage too high	A							

PRE-CHECK

FLOW CHART Test procedure

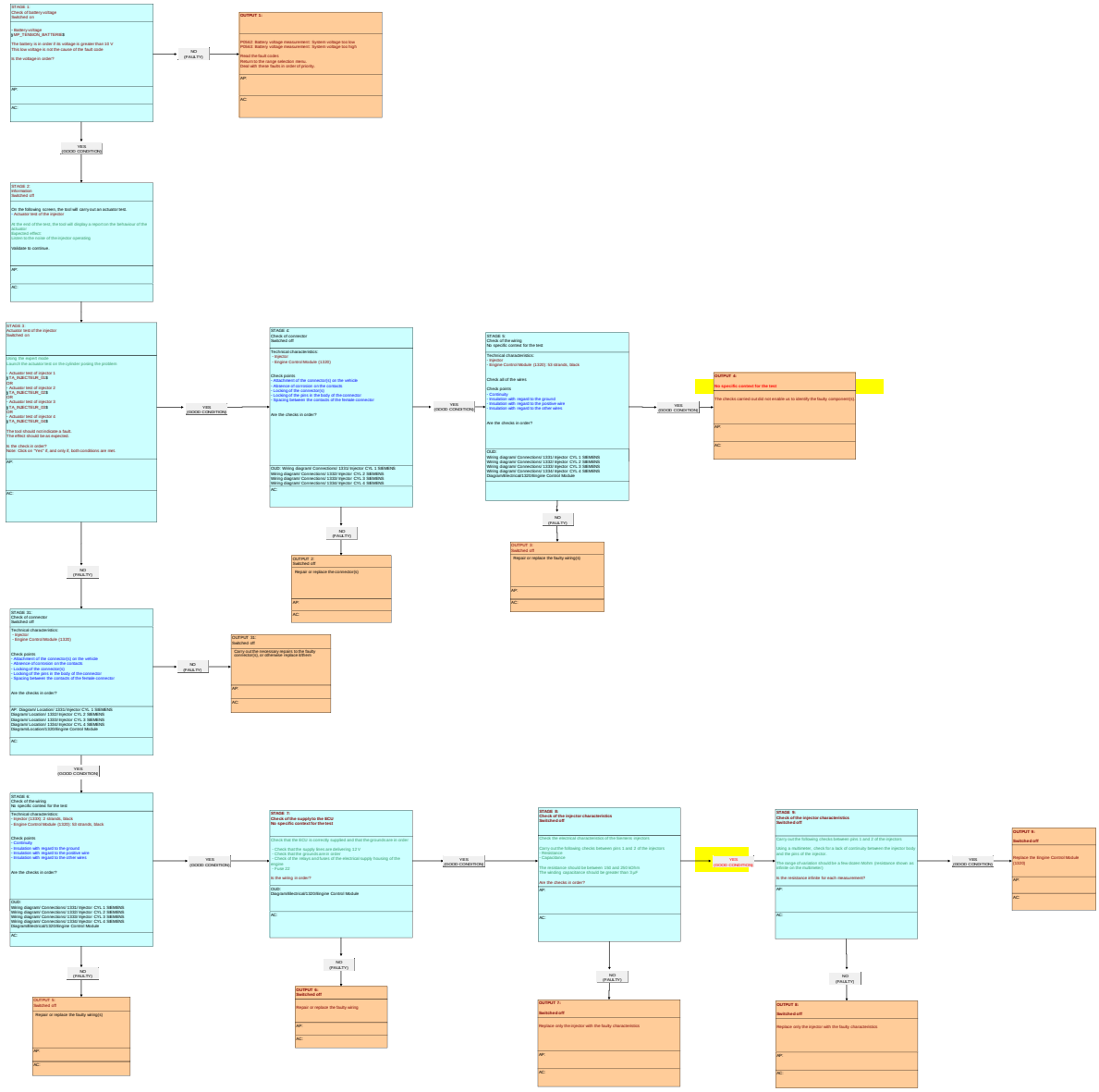

INFORMATION : FAULT CODE P0269 (ENGINE MANAGEMENT ECU)

SPECIAL FEATURE :

FOR : 1PMJ - B0FBM : DV6C TURBO DIESEL

FOR : 1CMJ - B0FBM : DV6C TURBO DIESEL

FOR : 1CB7 - B0FBM : DV6C TURBO DIESEL

FOR : 1CX7 - B0FBM : DV6C TURBO DIESEL

FOR : 1C58 - B0FBM : DV6C TURBO DIESEL

FOR : 1PT7 - B0FBM : DV6C TURBO DIESEL

FOR : 1PW2 - B0FBM : DV6C TURBO DIESEL

FOR : 1CB8 - B0FBM : DV6C TURBO DIESEL

FOR : 1CXA - B0FBM : DV6C TURBO DIESEL

FOR : 1CYA - B0FBM : DV6C TURBO DIESEL

FOR : 1PTB - B0FBM : DV6C TURBO DIESEL

FOR : 1PTC - B0FBM : DV6C TURBO DIESEL

FOR : 1PIA - B0FBM : DV6C TURBO DIESEL

Engine ECU CONTINENTAL SID 807 branch 2	
Fault code	P0269
After sales description of the fault code	No. 3 cylinder : Injector resetting outside tolerance
Description of the diagnostics	Difference of more than 0,8 mg/stroke between the pilot injection and the flow reference value
Conditions of activation of the diagnostics	engine running
Conditions of disappearance of the fault	The following conditions have to be met - Engine hot (Coolant temperature above 70°C) - External air temperature greater than 0°C - Gear higher than 3rd - Vehicle speed higher than 40 km/h

	- Perform long decelerations without braking (Between 2500 and 1500 rpm)
Down-grade modes if fault present	-
Switching on of the warning lamp and/or warning message	-
Main customer complaints likely	Jerking/stalling
	Engine acceleration at wrong time
	Noise
	Slightly higher fuel consumption
	Starting problem
	Smoke from the exhaust
	Lack of power
Suspect areas	Fuel injector 3
	Injector classification
	Poor quality of the fuel or type of fuel
	Fuel return
	Inlet valve - Exhaust valve - Spring - Seal
	Piston - Piston rings - Shaft - Cooling system
	Connecting rod

Fault code(s): P0263 or P0266 or P0269 or P0272

Reminder DTC

Do not fill in this section for the FLOW CHART phase

DTC no.	Aftersales text of the DTC	Fault type	Conditions for fault finding	Downgraded mode after a fault is ascertained	Illumination of driving aids	Suspected areas Major control steps	The client effect(s)/symptom(s) associated with the DTCs	Fault code(s) to be dealt with before working through this flow chart	Tools required
P0263	Control of injector 1: Correction of injector lag time outside the norm	B							
P0266	Control of injector 2: Correction of injector lag time outside the norm	B							
P0269	Control of injector 3: Correction of injector lag time outside the norm	B							
P0272	Control of injector 4: Correction of injector lag time outside the norm	B							

PRE-CHECK

FLOW CHART Test procedure

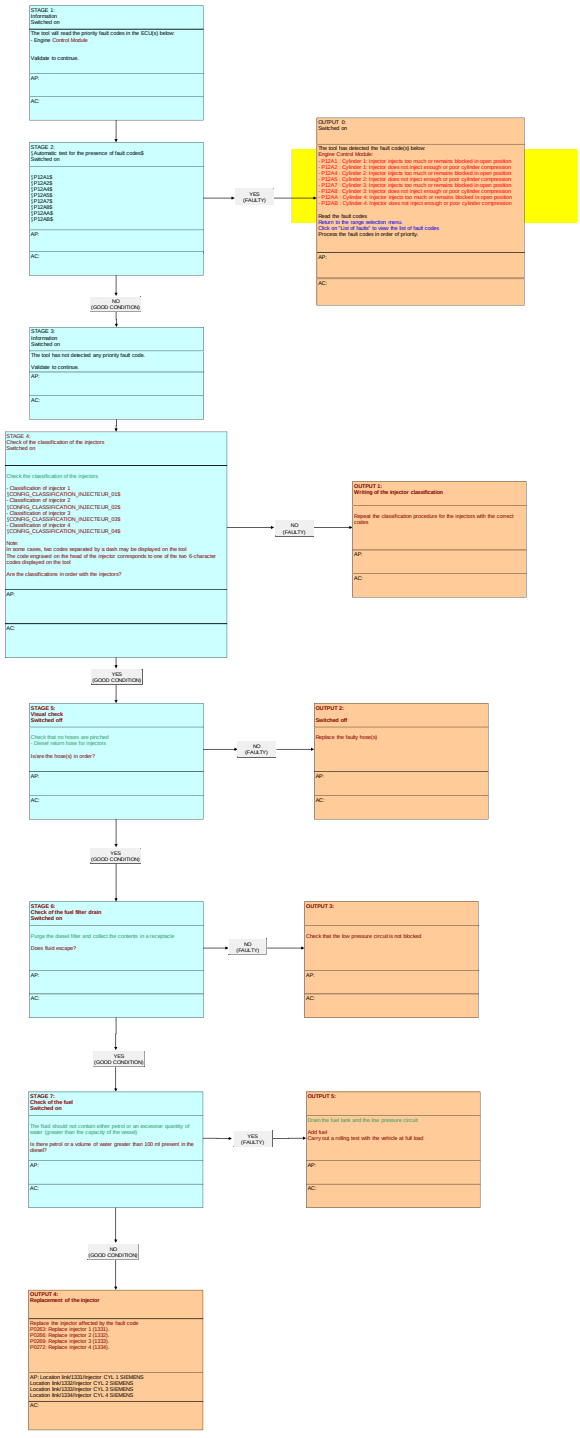

INFORMATION : FAULT CODE P0271 (ENGINE MANAGEMENT ECU)

SPECIAL FEATURE :

FOR : 1PMJ - B0FBM : DV6C TURBO DIESEL

FOR : 1CMJ - B0FBM : DV6C TURBO DIESEL

FOR : 1CB7 - B0FBM : DV6C TURBO DIESEL

FOR : 1CX7 - B0FBM : DV6C TURBO DIESEL

FOR : 1C58 - B0FBM : DV6C TURBO DIESEL

FOR : 1PT7 - B0FBM : DV6C TURBO DIESEL

FOR : 1PW2 - B0FBM : DV6C TURBO DIESEL

FOR : 1CB8 - B0FBM : DV6C TURBO DIESEL

FOR : 1CXA - B0FBM : DV6C TURBO DIESEL

FOR : 1CYA - B0FBM : DV6C TURBO DIESEL

FOR : 1PTB - B0FBM : DV6C TURBO DIESEL

FOR : 1PTC - B0FBM : DV6C TURBO DIESEL

FOR : 1PIA - B0FBM : DV6C TURBO DIESEL

Engine ECU CONTINENTAL SID 807 branch 2	
Fault code	P0271
After sales description of the fault code	Injector 4 signal.: Short circuit between two wires
Description of the diagnostics	Short circuit between the 2 tracks detected for 400 ms when injector 4 is controlled
Conditions of activation of the diagnostics	Ignition switched on
Conditions of disappearance of the fault	Driving for 5 minutes
	Closing of the EGR (exhaust gas recycling) valve
	Irreversible deactivation of the vehicle speed limiter
	Irreversible deactivation of the vehicle cruise control
	Deactivation of taking account of the tight spot information
	Switching of the turbocharging pressure regulation to controlled mode

Down-grade modes if fault present	Cutting of fuel injector 4
	Deactivation of the request for regeneration of the particle filter from the diagnostic tool
	Deactivation of the "easy-move" (electric parking brake) functionality
	For a gearbox with engine speed regulation (automatic gearbox or piloted manual gearbox), limitation of the torque sent to the gearbox
Switching on of the warning lamp and/or warning message	Warning lamp MIL
Main customer complaints likely	Jerking/stalling
	Engine acceleration at wrong time
	Noise
	Slightly higher fuel consumption
	Starting problem
	Smoke from the exhaust
	Lack of power
Suspect areas	Fuel injector 4
	Electrical harness
	Connectors

Fault code(s): P0201 or P0202 or P0203 or P0204 or P0262 or P0265 or P0268 or P0271 or P062D or P1641 or P2146 or P2148

Reminder DTC

Do not fill in this section for the FLOW CHART phase

DTC no.	Alternate text of the DTC	Priority	Conditions for fault finding	Downgraded mode after a fault is ascertained	Operating safety (Operating safety)	Suspected areas Major control steps	The client effects(symptomatic) associated with the DTCs	Fault code(s) to be dealt with before working through this flow chart	Tools required
P0201	Control of injector 1: Open circuit on the circuit (wiring, injector, ECU)	A							
P0202	Control of injector 2: Open circuit on the circuit (wiring, injector, ECU)	A							
P0203	Control of injector 3: Open circuit on the circuit (wiring, injector, ECU)	A							
P0204	Control of injector 4: Open circuit on the circuit (wiring, injector, ECU)	A							
P0262	Control of injector 1: Short-circuit to positive on the circuit (wiring, injector, ECU)	A							
P0265	Control of injector 2: Short-circuit to positive on the circuit (wiring, injector, ECU)	A							
P0268	Control of injector 3: Short-circuit to positive on the circuit (wiring, injector, ECU)	A							
P0271	Control of injector 4: Short-circuit to positive on the circuit (wiring, injector, ECU)	A							
P062D	ECU voltage converter for control of the injectors faulty on bank 1	A							
P1641	ECU initialisation malfunction of the injector bank or wiring fault	A							
P2146	Injector control: injection bank 1: short-circuit	A							
P2148	Injector control: injection bank 1: voltage too high	A							

PRE-CHECK

FLOW CHART Test procedure

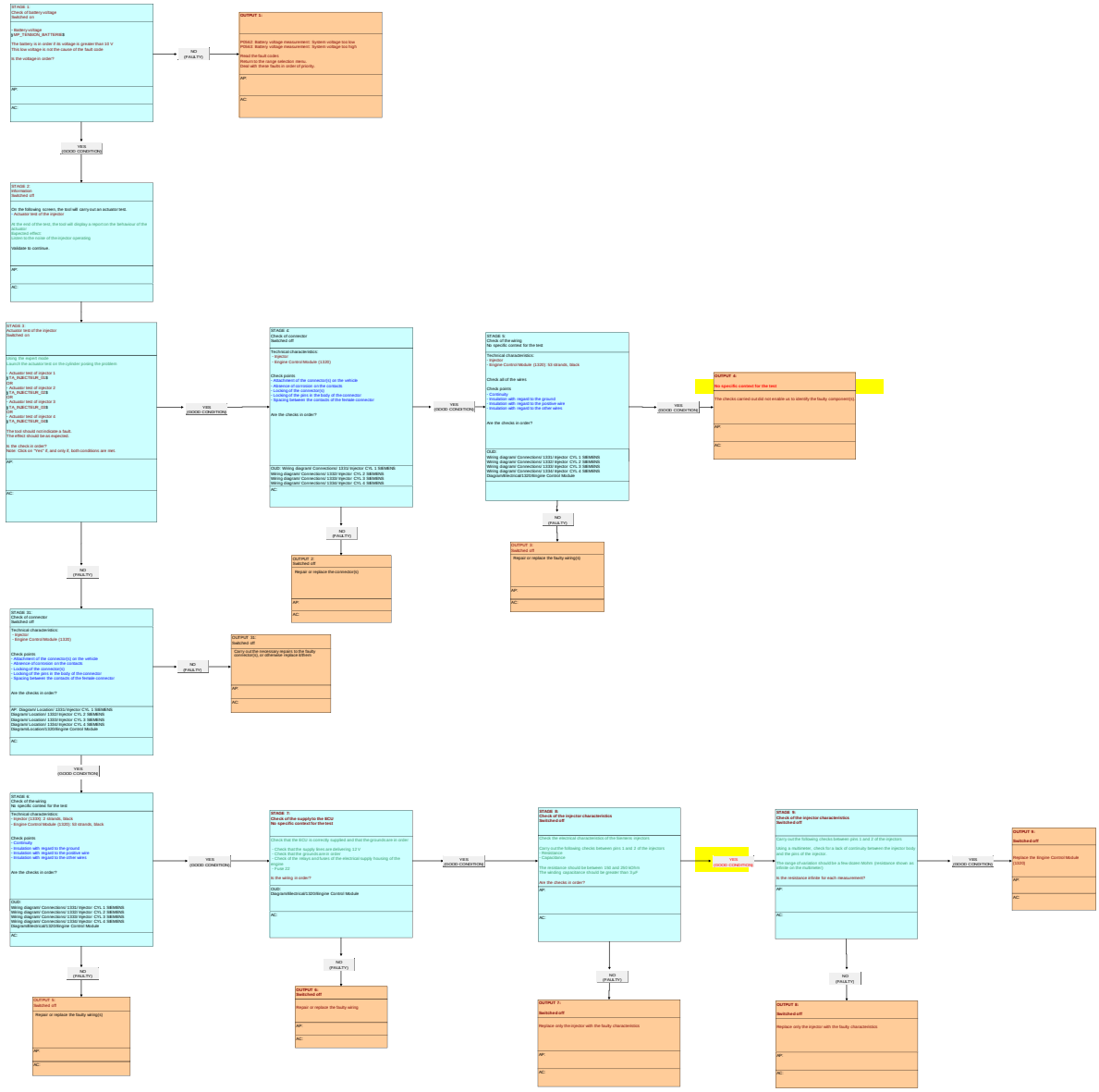

INFORMATION : FAULT CODE P0272 (ENGINE MANAGEMENT ECU)

SPECIAL FEATURE :

FOR : 1PMJ - B0FBM : DV6C TURBO DIESEL

FOR : 1CMJ - B0FBM : DV6C TURBO DIESEL

FOR : 1CB7 - B0FBM : DV6C TURBO DIESEL

FOR : 1CX7 - B0FBM : DV6C TURBO DIESEL

FOR : 1C58 - B0FBM : DV6C TURBO DIESEL

FOR : 1PT7 - B0FBM : DV6C TURBO DIESEL

FOR : 1PW2 - B0FBM : DV6C TURBO DIESEL

FOR : 1CB8 - B0FBM : DV6C TURBO DIESEL

FOR : 1CXA - B0FBM : DV6C TURBO DIESEL

FOR : 1CYA - B0FBM : DV6C TURBO DIESEL

FOR : 1PTB - B0FBM : DV6C TURBO DIESEL

FOR : 1PTC - B0FBM : DV6C TURBO DIESEL

FOR : 1PIA - B0FBM : DV6C TURBO DIESEL

Engine ECU CONTINENTAL SID 807 branch 2	
Fault code	P0272
After sales description of the fault code	No. 4 cylinder : Injector resetting outside tolerance
Description of the diagnostics	Difference of more than 0,8 mg/stroke between the pilot injection and the flow reference value
Conditions of activation of the diagnostics	engine running
Conditions of disappearance of the fault	The following conditions have to be met - Engine hot (Coolant temperature above 70°C) - External air temperature greater than 0°C - Gear higher than 3rd - Vehicle speed higher than 40 km/h

	- Perform long decelerations without braking (Between 2500 and 1500 rpm)
Down-grade modes if fault present	-
Switching on of the warning lamp and/or warning message	-
Main customer complaints likely	Jerking/stalling
	Engine acceleration at wrong time
	Noise
	Slightly higher fuel consumption
	Starting problem
	Smoke from the exhaust
	Lack of power
Suspect areas	Fuel injector 4
	Injector classification
	Poor quality of the fuel or type of fuel
	Fuel return
	Inlet valve - Exhaust valve - Spring - Seal
	Piston - Piston rings - Shaft - Cooling system
	Connecting rod

Fault code(s): P0263 or P0266 or P0269 or P0272

Reminder DTC

Do not fill in this section for the FLOW CHART phase

DTC no.	Aftersales text of the DTC	Fault type	Conditions for fault finding	Downgraded mode after a fault is ascertained	Illumination of driving aids	Suspected areas Major control steps	The client effect(s)/symptom(s) associated with the DTCs	Fault code(s) to be dealt with before working through this flow chart	Tools required
P0263	Control of injector 1: Correction of injector lag time outside the norm	B							
P0266	Control of injector 2: Correction of injector lag time outside the norm	B							
P0269	Control of injector 3: Correction of injector lag time outside the norm	B							
P0272	Control of injector 4: Correction of injector lag time outside the norm	B							

PRE-CHECK

FLOW CHART Test procedure

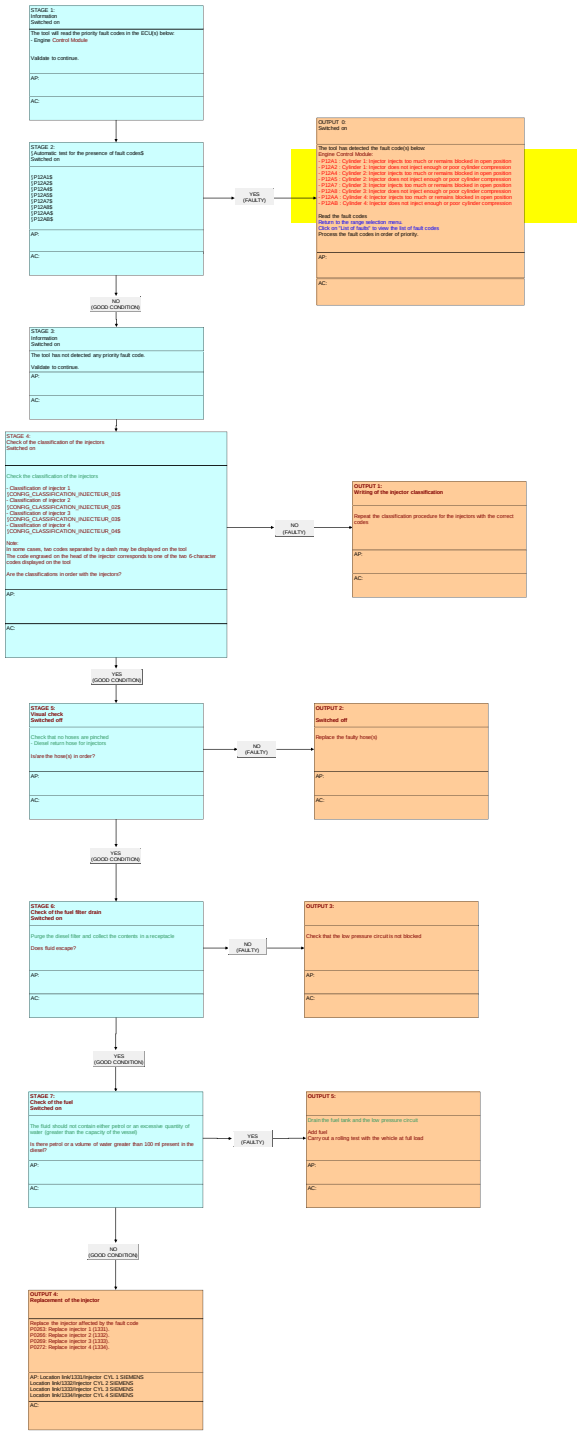

INFORMATION : FAULT CODE P0299 (ENGINE MANAGEMENT ECU)

SPECIAL FEATURE :

FOR : 1PMJ - B0FBM : DV6C TURBO DIESEL

FOR : 1CMJ - B0FBM : DV6C TURBO DIESEL

FOR : 1CB7 - B0FBM : DV6C TURBO DIESEL

FOR : 1CX7 - B0FBM : DV6C TURBO DIESEL

FOR : 1C58 - B0FBM : DV6C TURBO DIESEL

FOR : 1PT7 - B0FBM : DV6C TURBO DIESEL

FOR : 1PW2 - B0FBM : DV6C TURBO DIESEL

FOR : 1CB8 - B0FBM : DV6C TURBO DIESEL

FOR : 1CXA - B0FBM : DV6C TURBO DIESEL

FOR : 1CYA - B0FBM : DV6C TURBO DIESEL

FOR : 1PTB - B0FBM : DV6C TURBO DIESEL

FOR : 1PTC - B0FBM : DV6C TURBO DIESEL

FOR : 1PIA - B0FBM : DV6C TURBO DIESEL

Engine ECU CONTINENTAL SID 807 branch 2	
Fault code	P0299
After sales description of the fault code	Charge pressure regulation : Air pressure below the reference value
Description of the diagnostics	For an engine speed between 2000 and 3000 rpm at full load, the turbocharged air pressure measured is 300 mbars lower than the reference value for 5 seconds (Thresholds weighted in relation to the engine speed, the load, the atmospheric pressure and the air temperature at the air flow sensor)
Conditions of activation of the diagnostics	The following conditions have to be met - Engine speed above 2000 rpm - Engine torque higher than 200Nm
Conditions of disappearance of the fault	3 drives in succession for 5 minutes with several full load accelerations for 10 seconds (Ignition off and restarting between each drive)

Down-grade modes if fault present	Closing of the EGR (exhaust gas recycling) valve
	Irreversible deactivation of the vehicle cruise control
	Switching of the turbocharging pressure regulation to controlled mode
	Deactivation of the request for regeneration of the particle filter from the diagnostic tool
	Sending of the information "torque uncertain" on the CAN network
Switching on of the warning lamp and/or warning message	Warning lamp MIL
Main customer complaints likely	Jerking/stalling
	Noise
	Lack of power
	Smoke from the exhaust
	Slightly higher fuel consumption
	Fluid leak/smells (diesel fuel, oil, etc.)
	Loss of braking
	Absence of automatic stopping of the internal combustion engine (If the vehicle has the Stop and Start system)
	Problem with automatic restarting of the internal combustion engine (If the vehicle has the Stop and Start system)
Suspect areas	Atmospheric pressure sensor in the engine management ECU
	Clogged air filter
	Air temperature sensor at the air flowmeter
	Leak between turbocharger and air mixer
	Leak between the air mixer and the engine intake (including EGR inlet point)
	Blockage of the turbocharging air cooler
	Manifold air entry pressure sensor
	turbocharger
	Turbocharger variable geometry control solenoid valve
	Turbocharger variable geometry position repeat sensor
	Exhaust gas recycling valve
	oil
	sump
	Oil suction strainer
	oil pump
	Lubrication circuit of the turbocharger
	vacuum pump
	Vacuum circuit leak
	Electrical harnesses
	Connectors

Fault code(s): P0299 or P11AB

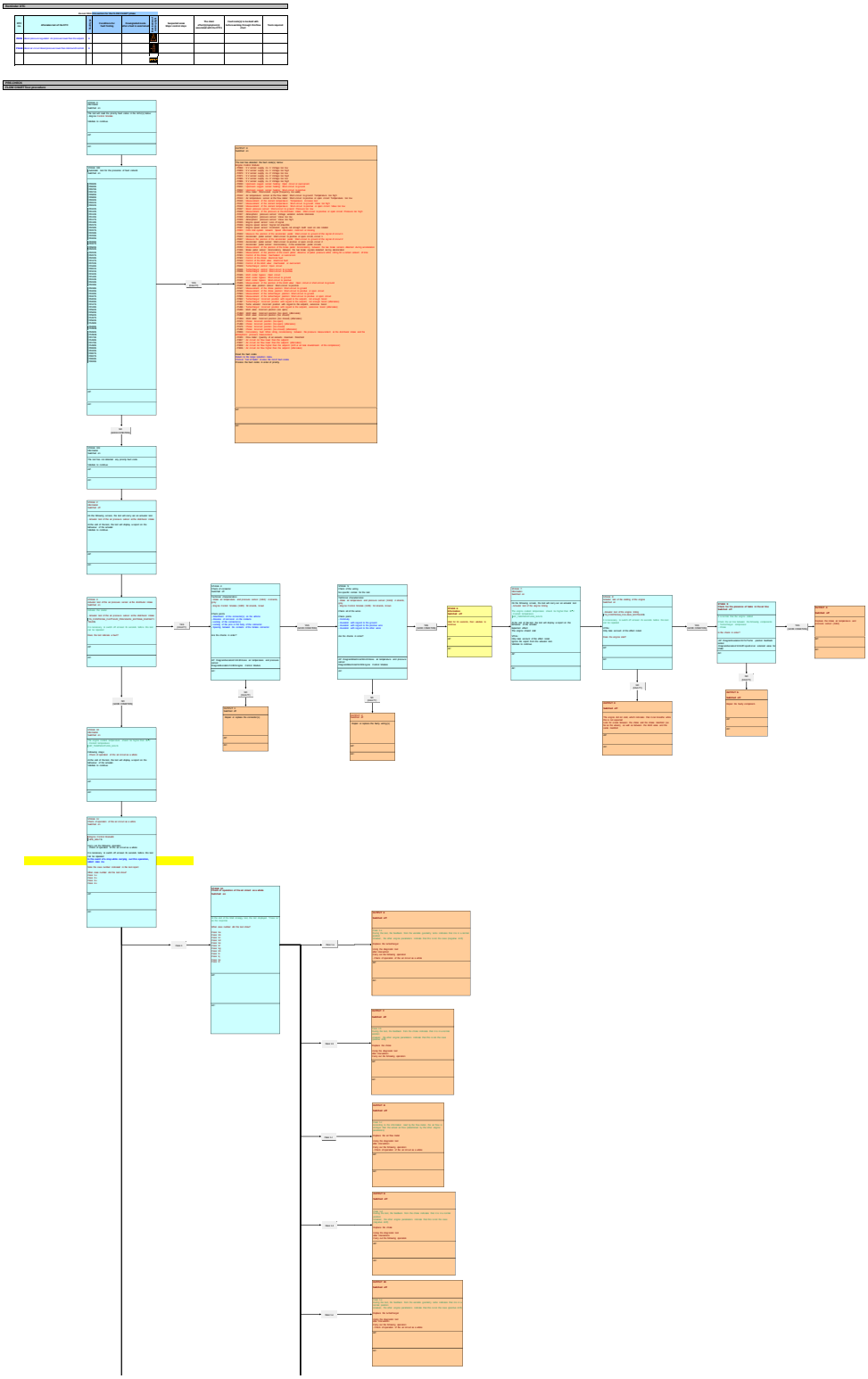

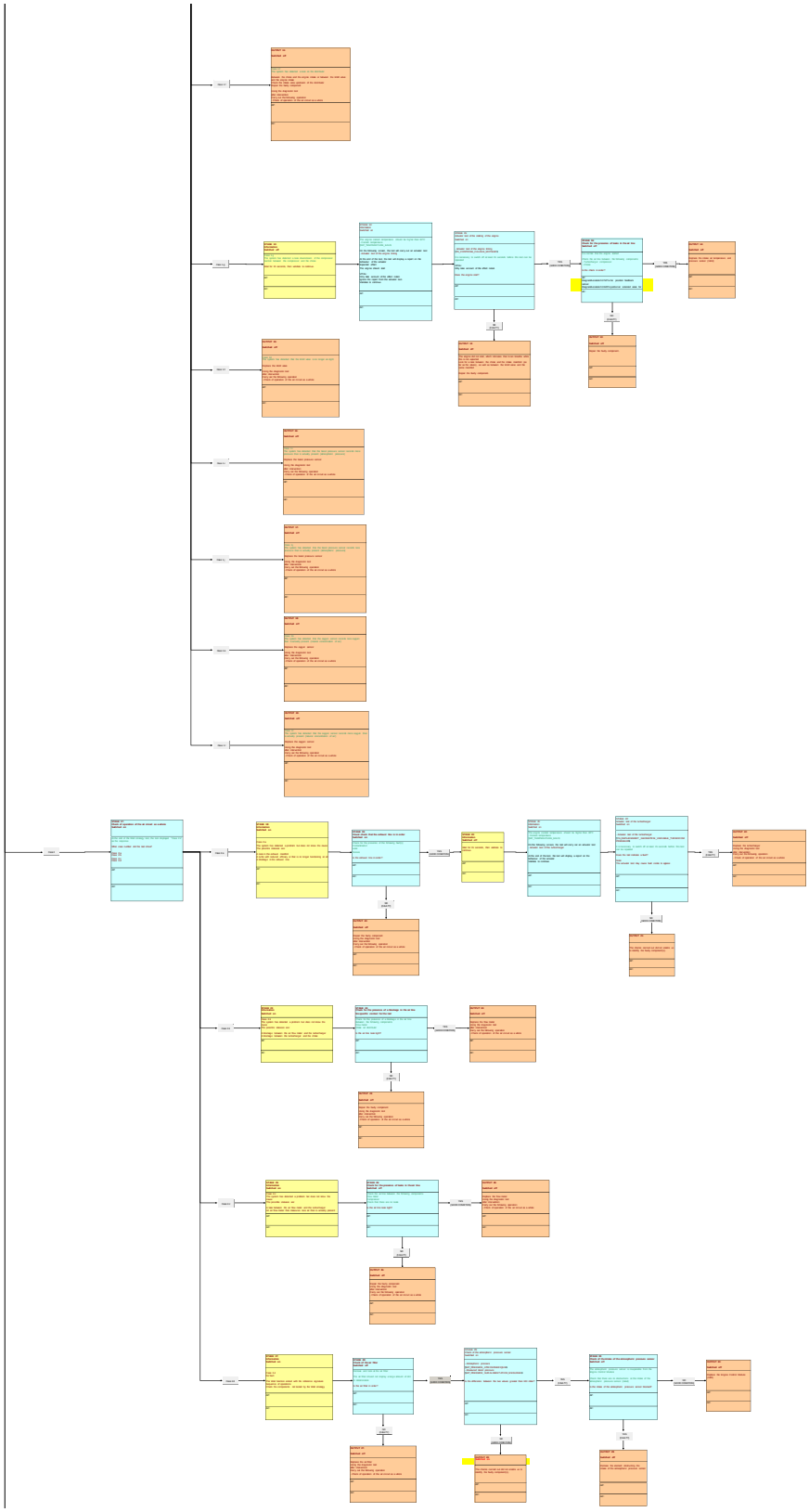

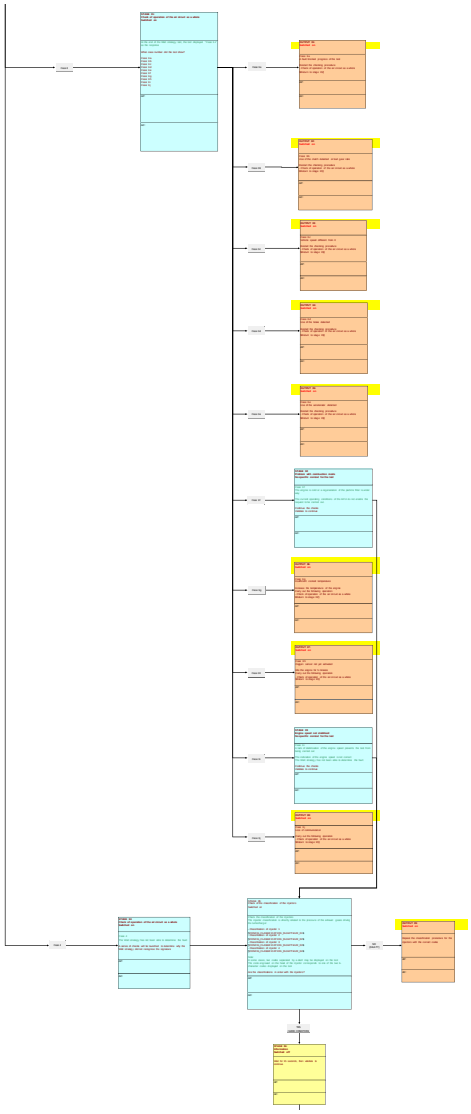

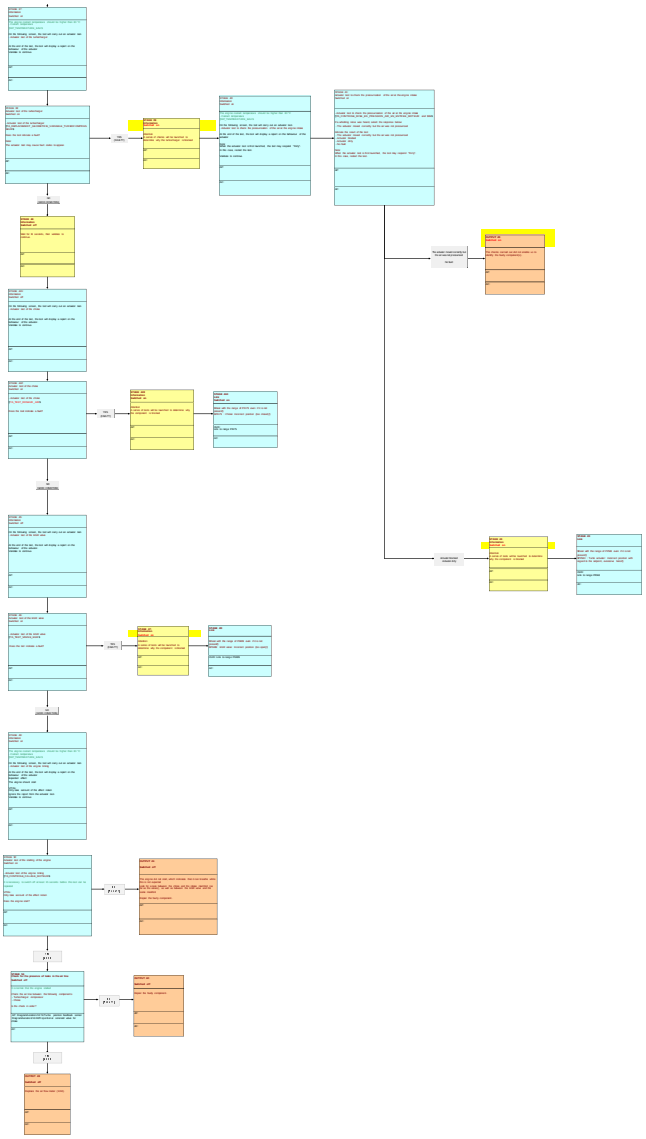

INFORMATION : FAULT CODE P0335 (ENGINE MANAGEMENT ECU)

SPECIAL FEATURE :

FOR : 1PMJ - B0FBM : DV6C TURBO DIESEL

FOR : 1CMJ - B0FBM : DV6C TURBO DIESEL

FOR : 1CB7 - B0FBM : DV6C TURBO DIESEL

FOR : 1CX7 - B0FBM : DV6C TURBO DIESEL

FOR : 1C58 - B0FBM : DV6C TURBO DIESEL

FOR : 1PT7 - B0FBM : DV6C TURBO DIESEL

FOR : 1PW2 - B0FBM : DV6C TURBO DIESEL

FOR : 1CB8 - B0FBM : DV6C TURBO DIESEL

FOR : 1CXA - B0FBM : DV6C TURBO DIESEL

FOR : 1CYA - B0FBM : DV6C TURBO DIESEL

FOR : 1PTB - B0FBM : DV6C TURBO DIESEL

FOR : 1PTC - B0FBM : DV6C TURBO DIESEL

FOR : 1PIA - B0FBM : DV6C TURBO DIESEL

Engine ECU CONTINENTAL SID 807 branch 2	
Fault code	P0335
After sales description of the fault code	Engine speed measurement : Loss of signal
Description of the diagnostics	Loss of the engine speed sensor signal for 500 ms
Conditions of activation of the diagnostics	Engine running
Conditions of disappearance of the fault	Driving for 5 minutes
Down-grade modes if fault present	Irreversible deactivation of the vehicle speed curbing function
	Reversible deactivation of the vehicle speed limiter
	Reversible deactivation of the vehicle cruise control
	Sending of the information "torque uncertain" on the CAN network

	For a gearbox with engine speed regulation (automatic gearbox or piloted manual gearbox), limitation of the torque sent to the gearbox
Switching on of the warning lamp and/or warning message	-
Main customer complaints likely	Starting problem
	Jerking/stalling
Suspect areas	Engine speed sensor
	Electrical harness
	Connectors

Fault code(s): P0335 or P0336 or P0337 or P0339

Reminder DTC

Do not fill in this section for the FLOW CHART phase

DTC no.	Aftersales text of the DTC	Fault type	Conditions for fault finding	Downgraded mode after a fault is ascertained	Illumination of warning light	Suspected areas Major control steps	The client effect(s)/symptom(s) associated with the DTCs	Fault code(s) to be dealt with before working through this flow chart	Tools required
P0335	Engine speed sensor: Loss of signal	0,0							
P0336	Engine speed sensor: Signal not plausible	0,0							
P0337	Engine speed sensor: Incoherent signal, not enough teeth seen on one rotation	0,0							
P0339	Engine speed sensor: Acceleration too high	0,0							

PRE-CHECK

FLOW CHART Test procedure

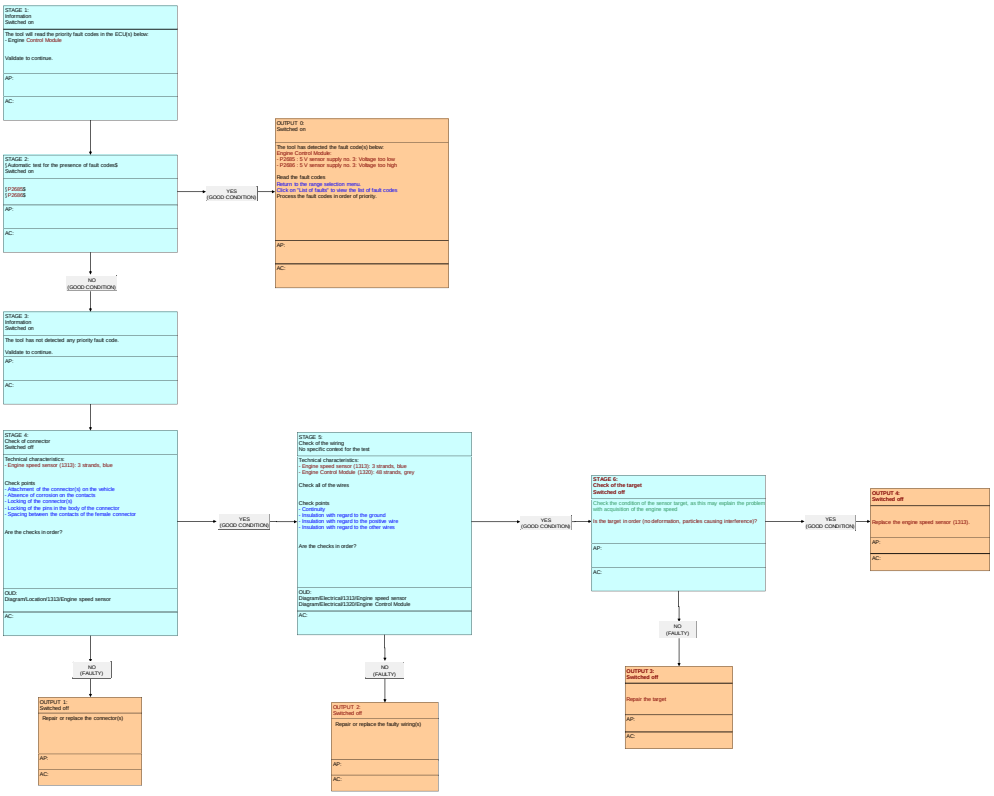

INFORMATION : FAULT CODE P0336 (ENGINE MANAGEMENT ECU)

SPECIAL FEATURE :

FOR : 1PMJ - B0FBM : DV6C TURBO DIESEL

FOR : 1CMJ - B0FBM : DV6C TURBO DIESEL

FOR : 1CB7 - B0FBM : DV6C TURBO DIESEL

FOR : 1CX7 - B0FBM : DV6C TURBO DIESEL

FOR : 1C58 - B0FBM : DV6C TURBO DIESEL

FOR : 1PT7 - B0FBM : DV6C TURBO DIESEL

FOR : 1PW2 - B0FBM : DV6C TURBO DIESEL

FOR : 1CB8 - B0FBM : DV6C TURBO DIESEL

FOR : 1CXA - B0FBM : DV6C TURBO DIESEL

FOR : 1CYA - B0FBM : DV6C TURBO DIESEL

FOR : 1PTB - B0FBM : DV6C TURBO DIESEL

FOR : 1PTC - B0FBM : DV6C TURBO DIESEL

FOR : 1PIA - B0FBM : DV6C TURBO DIESEL

Engine ECU CONTINENTAL SID 807 branch 2	
Fault code	P0336
After sales description of the fault code	Engine speed measurement : Signal absent when starting
Description of the diagnostics	Absence of signal from the engine speed sensor on starting
Conditions of activation of the diagnostics	Ignition switched on
Conditions of disappearance of the fault	10 successive starts
Down-grade modes if fault present	Irreversible deactivation of the vehicle speed curbing function
	Reversible deactivation of the vehicle speed limiter
	Reversible deactivation of the vehicle cruise control
	Sending of the information "torque uncertain" on the CAN network

	For a gearbox with engine speed regulation (automatic gearbox or piloted manual gearbox), limitation of the torque sent to the gearbox
Switching on of the warning lamp and/or warning message	-
Main customer complaints likely	Starting problem
	Jerking/stalling
Suspect areas	Engine speed sensor
	Engine speed sensor target
	Electrical harness
	Connectors

Fault code(s): P0335 or P0336 or P0337 or P0339

Reminder DTC

Do not fill in this section for the FLOW CHART phase

DTC no.	Aftersales text of the DTC	Fault type	Conditions for fault finding	Downgraded mode after a fault is ascertained	Illumination of customer light	Suspected areas Major control steps	The client effect(s)/symptom(s) associated with the DTCs	Fault code(s) to be dealt with before working through this flow chart	Tools required
P0335	Engine speed sensor: Loss of signal	0,0							
P0336	Engine speed sensor: Signal not plausible	0,0							
P0337	Engine speed sensor: Incoherent signal, not enough teeth seen on one rotation	0,0							
P0339	Engine speed sensor: Acceleration too high	0,0							

PRE-CHECK

FLOW CHART Test procedure

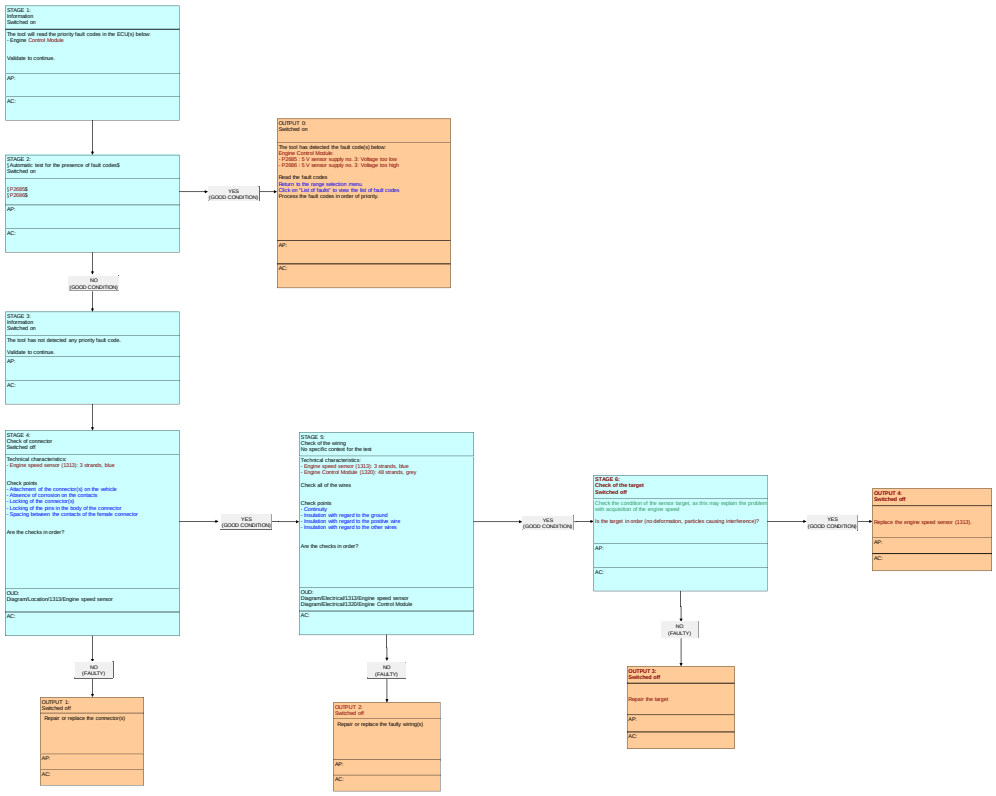

INFORMATION : FAULT CODE P0337 (ENGINE MANAGEMENT ECU)

SPECIAL FEATURE :

FOR : 1PMJ - B0FBM : DV6C TURBO DIESEL

FOR : 1CMJ - B0FBM : DV6C TURBO DIESEL

FOR : 1CB7 - B0FBM : DV6C TURBO DIESEL

FOR : 1CX7 - B0FBM : DV6C TURBO DIESEL

FOR : 1C58 - B0FBM : DV6C TURBO DIESEL

FOR : 1PT7 - B0FBM : DV6C TURBO DIESEL

FOR : 1PW2 - B0FBM : DV6C TURBO DIESEL

FOR : 1CB8 - B0FBM : DV6C TURBO DIESEL

FOR : 1CXA - B0FBM : DV6C TURBO DIESEL

FOR : 1CYA - B0FBM : DV6C TURBO DIESEL

FOR : 1PTB - B0FBM : DV6C TURBO DIESEL

FOR : 1PTC - B0FBM : DV6C TURBO DIESEL

FOR : 1PIA - B0FBM : DV6C TURBO DIESEL

Engine ECU CONTINENTAL SID 807 branch 2	
Fault code	P0337
After sales description of the fault code	Engine speed measurement : Signal inconsistent, either too many or not enough teeth seen on one rev
Description of the diagnostics	The number of teeth seen on the target of the engine speed sensor is insufficient per rev
Conditions of activation of the diagnostics	Engine running
Conditions of disappearance of the fault	At least one of the following conditions must be fulfilled - 10 successive starts - Driving for 5 minutes
	Irreversible deactivation of the vehicle speed curbing function
	Reversible deactivation of the vehicle speed limiter
	Reversible deactivation of the vehicle cruise control

Down-grade modes if fault present	Sending of the information "torque uncertain" on the CAN network
	For a gearbox with engine speed regulation (automatic gearbox or piloted manual gearbox), limitation of the torque sent to the gearbox
Switching on of the warning lamp and/or warning message	-
Main customer complaints likely	Starting problem
	Jerking/stalling
Suspect areas	Engine speed sensor
	Engine speed sensor target
	Electrical harness
	Connectors

Fault code(s): P0335 or P0336 or P0337 or P0339

Reminder DTC

Do not fill in this section for the FLOW CHART phase

DTC no.	Aftersales text of the DTC	Fault type	Conditions for fault finding	Downgraded mode after a fault is ascertained	Illumination of customer light	Suspected areas Major control steps	The client effect(s)/symptom(s) associated with the DTCs	Fault code(s) to be dealt with before working through this flow chart	Tools required
P0335	Engine speed sensor: Loss of signal	0,0							
P0336	Engine speed sensor: Signal not plausible	0,0							
P0337	Engine speed sensor: Incoherent signal, not enough teeth seen on one rotation	0,0							
P0339	Engine speed sensor: Acceleration too high	0,0							

PRE-CHECK

FLOW CHART Test procedure

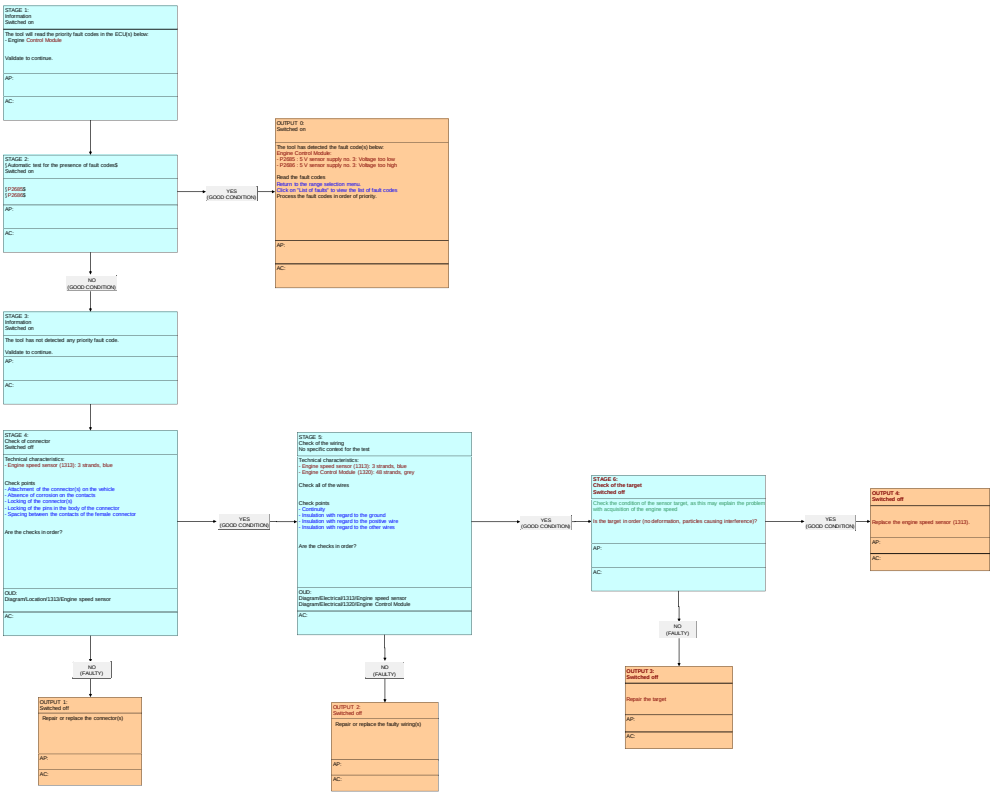

INFORMATION : FAULT CODE P0339 (ENGINE MANAGEMENT ECU)

SPECIAL FEATURE :

FOR : 1PMJ - B0FBM : DV6C TURBO DIESEL

FOR : 1CMJ - B0FBM : DV6C TURBO DIESEL

FOR : 1CB7 - B0FBM : DV6C TURBO DIESEL

FOR : 1CX7 - B0FBM : DV6C TURBO DIESEL

FOR : 1C58 - B0FBM : DV6C TURBO DIESEL

FOR : 1PT7 - B0FBM : DV6C TURBO DIESEL

FOR : 1PW2 - B0FBM : DV6C TURBO DIESEL

FOR : 1CB8 - B0FBM : DV6C TURBO DIESEL

FOR : 1CXA - B0FBM : DV6C TURBO DIESEL

FOR : 1CYA - B0FBM : DV6C TURBO DIESEL

FOR : 1PTB - B0FBM : DV6C TURBO DIESEL

FOR : 1PTC - B0FBM : DV6C TURBO DIESEL

FOR : 1PIA - B0FBM : DV6C TURBO DIESEL

Engine ECU CONTINENTAL SID 807 branch 2	
Fault code	P0339
After sales description of the fault code	Engine speed measurement : Sudden increase in the measurement
Description of the diagnostics	Detection of a loss of signal from the engine speed sensor
Conditions of activation of the diagnostics	engine running
Conditions of disappearance of the fault	At least one of the following conditions must be fulfilled - 10 successive starts - Driving for 5 minutes
	Irreversible deactivation of the vehicle speed curbing function
	Reversible deactivation of the vehicle speed limiter
	Reversible deactivation of the vehicle cruise control

Down-grade modes if fault present	Sending of the information "torque uncertain" on the CAN network
	For a gearbox with engine speed regulation (automatic gearbox or piloted manual gearbox), limitation of the torque sent to the gearbox
Switching on of the warning lamp and/or warning message	-
Main customer complaints likely	Starting problem
	Coughs / Timing
Suspect areas	Engine speed sensor
	Engine speed sensor target
	Electrical harness
	Connectors

Fault code(s): P0335 or P0336 or P0337 or P0339

Reminder DTC

Do not fill in this section for the FLOW CHART phase

DTC no.	Aftersales text of the DTC	Fault type	Conditions for fault finding	Downgraded mode after a fault is ascertained	Illumination of customer light	Suspected areas Major control steps	The client effect(s)/symptom(s) associated with the DTCs	Fault code(s) to be dealt with before working through this flow chart	Tools required
P0335	Engine speed sensor: Loss of signal	0.0							
P0336	Engine speed sensor: Signal not plausible	0.0							
P0337	Engine speed sensor: Incoherent signal, not enough teeth seen on one rotation	0.0							
P0339	Engine speed sensor: Acceleration too high	0.0							

PRE-CHECK

FLOW CHART Test procedure

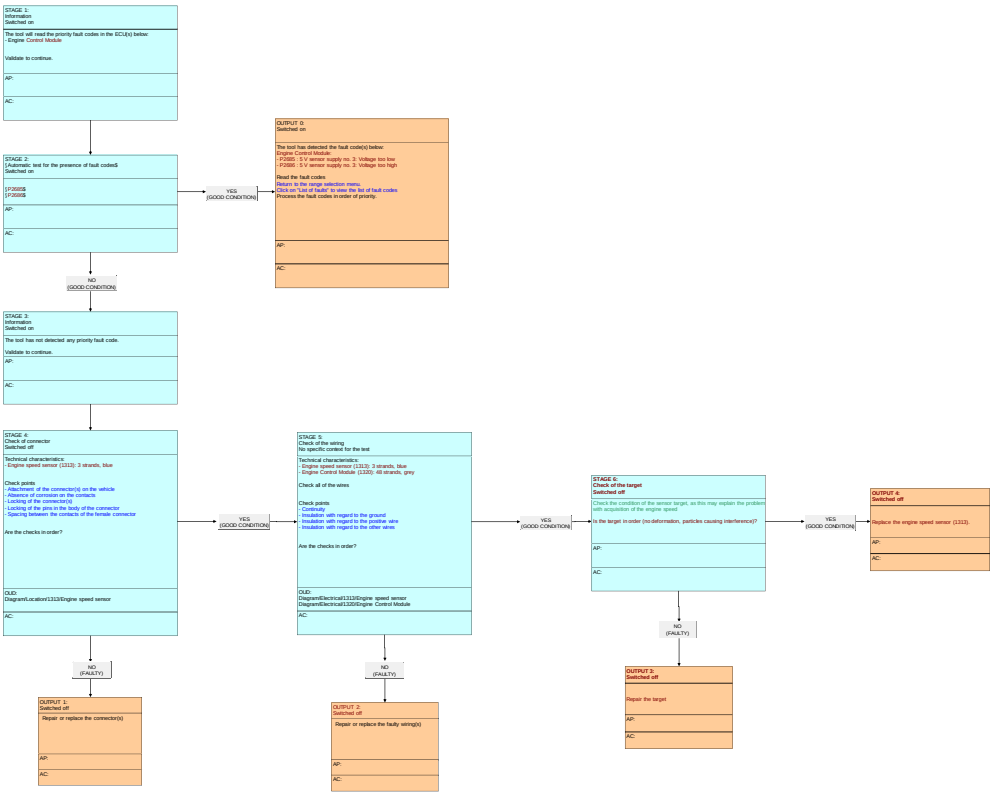

INFORMATION : FAULT CODE P0341 (ENGINE MANAGEMENT ECU)

SPECIAL FEATURE :

FOR : 1PMJ - B0FBM : DV6C TURBO DIESEL

FOR : 1CMJ - B0FBM : DV6C TURBO DIESEL

FOR : 1CB7 - B0FBM : DV6C TURBO DIESEL

FOR : 1CX7 - B0FBM : DV6C TURBO DIESEL

FOR : 1C58 - B0FBM : DV6C TURBO DIESEL

FOR : 1PT7 - B0FBM : DV6C TURBO DIESEL

FOR : 1PW2 - B0FBM : DV6C TURBO DIESEL

FOR : 1CB8 - B0FBM : DV6C TURBO DIESEL

FOR : 1CXA - B0FBM : DV6C TURBO DIESEL

FOR : 1CYA - B0FBM : DV6C TURBO DIESEL

FOR : 1PTB - B0FBM : DV6C TURBO DIESEL

FOR : 1PTC - B0FBM : DV6C TURBO DIESEL

FOR : 1PIA - B0FBM : DV6C TURBO DIESEL

Engine ECU CONTINENTAL SID 807 branch 2	
Fault code	P0341
After sales description of the fault code	Measurement of the camshaft position : Camshaft signal not available
Description of the diagnostics	Absence of synchronisation between the engine speed sensor and the camshaft sensor to carry out the first injection
Conditions of activation of the diagnostics	engine running
Conditions of disappearance of the fault	10 successive starts
Down-grade modes if fault present	-
Switching on of the warning lamp and/or warning message	-
Main customer complaints likely	Starting problem
	Absence of automatic stopping of the internal combustion engine (If the vehicle has the Stop and

	Start system)
Suspect areas	Camshaft position sensor
	Camshaft pulley
	Electrical harness
	Connectors

Fault code(s): P0341 or P0342

Reminder DTC

Do not fill in this section for the FLOW CHART phase

DTC no.	Aftersales text of the DTC	Fault type	Conditions for fault finding	Downgraded mode after a fault is ascertained	Illumination of customer driving light	Suspected areas Major control steps	The client effect(s)/symptom(s) associated with the DTCs	Fault code(s) to be dealt with before working through this flow chart	Tools required
P0341	Intake AAC position sensor: Camshaft signal not available	D2							
P0342	Intake AAC position sensor: Loss of signal while the engine is running, low state	D2							

PRE-CHECK

FLOW CHART Test procedure

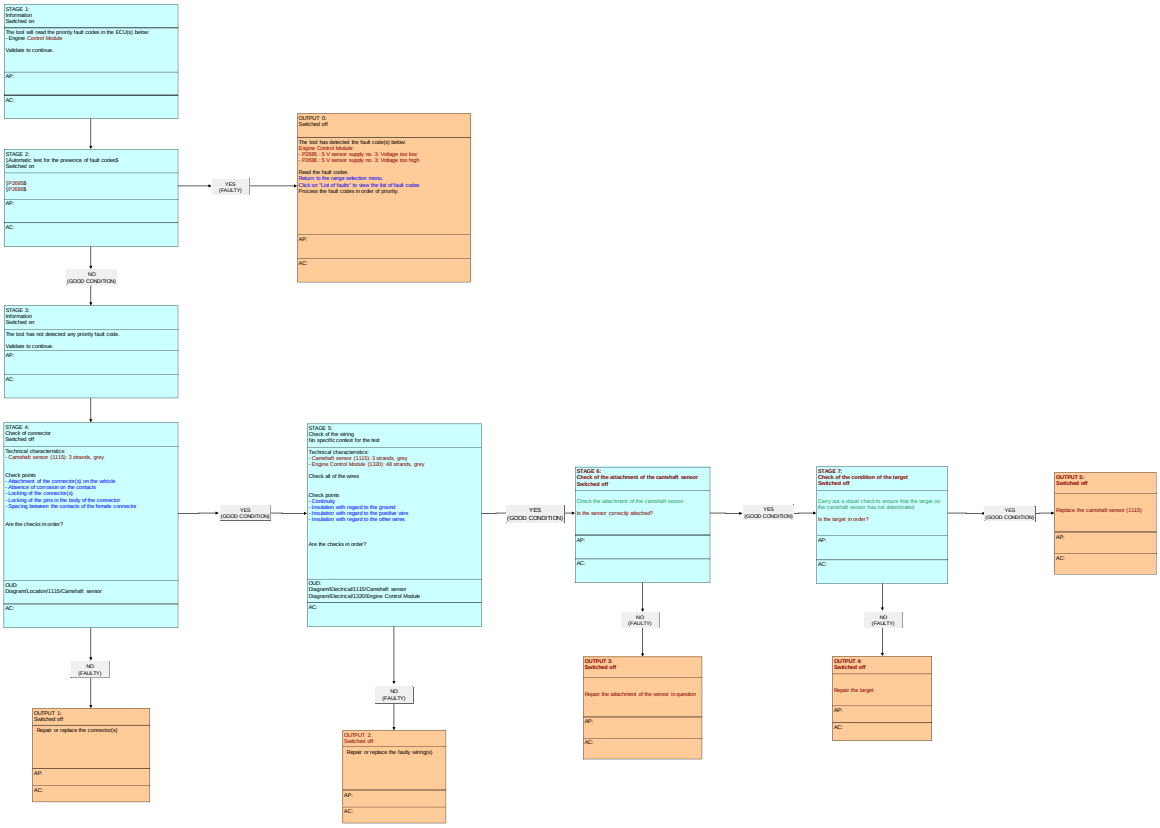

INFORMATION : FAULT CODE P0342 (ENGINE MANAGEMENT ECU)

SPECIAL FEATURE :

FOR : 1PMJ - B0FBM : DV6C TURBO DIESEL

FOR : 1CMJ - B0FBM : DV6C TURBO DIESEL

FOR : 1CB7 - B0FBM : DV6C TURBO DIESEL

FOR : 1CX7 - B0FBM : DV6C TURBO DIESEL

FOR : 1C58 - B0FBM : DV6C TURBO DIESEL

FOR : 1PT7 - B0FBM : DV6C TURBO DIESEL

FOR : 1PW2 - B0FBM : DV6C TURBO DIESEL

FOR : 1CB8 - B0FBM : DV6C TURBO DIESEL

FOR : 1CXA - B0FBM : DV6C TURBO DIESEL

FOR : 1CYA - B0FBM : DV6C TURBO DIESEL

FOR : 1PTB - B0FBM : DV6C TURBO DIESEL

FOR : 1PTC - B0FBM : DV6C TURBO DIESEL

FOR : 1PIA - B0FBM : DV6C TURBO DIESEL

Engine ECU CONTINENTAL SID 807 branch 2	
Fault code	P0342
After sales description of the fault code	Measurement of the camshaft position : Loss of camshaft signal while the engine is running
Description of the diagnostics	Loss of the camshaft sensor signal
Conditions of activation of the diagnostics	Engine running
Conditions of disappearance of the fault	10 successive starts
Down-grade modes if fault present	-
Switching on of the warning lamp and/or warning message	-

Main customer complaints likely	Starting problem
	Absence of automatic stopping of the internal combustion engine (If the vehicle has the Stop and Start system)
Suspect areas	Camshaft position sensor
	Connectors
	Camshaft pulley
	Electrical harness

Fault code(s): P0341 or P0342

Reminder DTC

Do not fill in this section for the FLOW CHART phase

DTC no.	Aftersales text of the DTC	Fault type	Conditions for fault finding	Downgraded mode after a fault is ascertained	Illumination of customer warning light	Suspected areas Major control steps	The client effect(s)/symptom(s) associated with the DTCs	Fault code(s) to be dealt with before working through this flow chart	Tools required
P0341	Intake AAC position sensor: Camshaft signal not available	D2							
P0342	Intake AAC position sensor: Loss of signal while the engine is running, low state	D2							

PRE-CHECK

FLOW CHART Test procedure

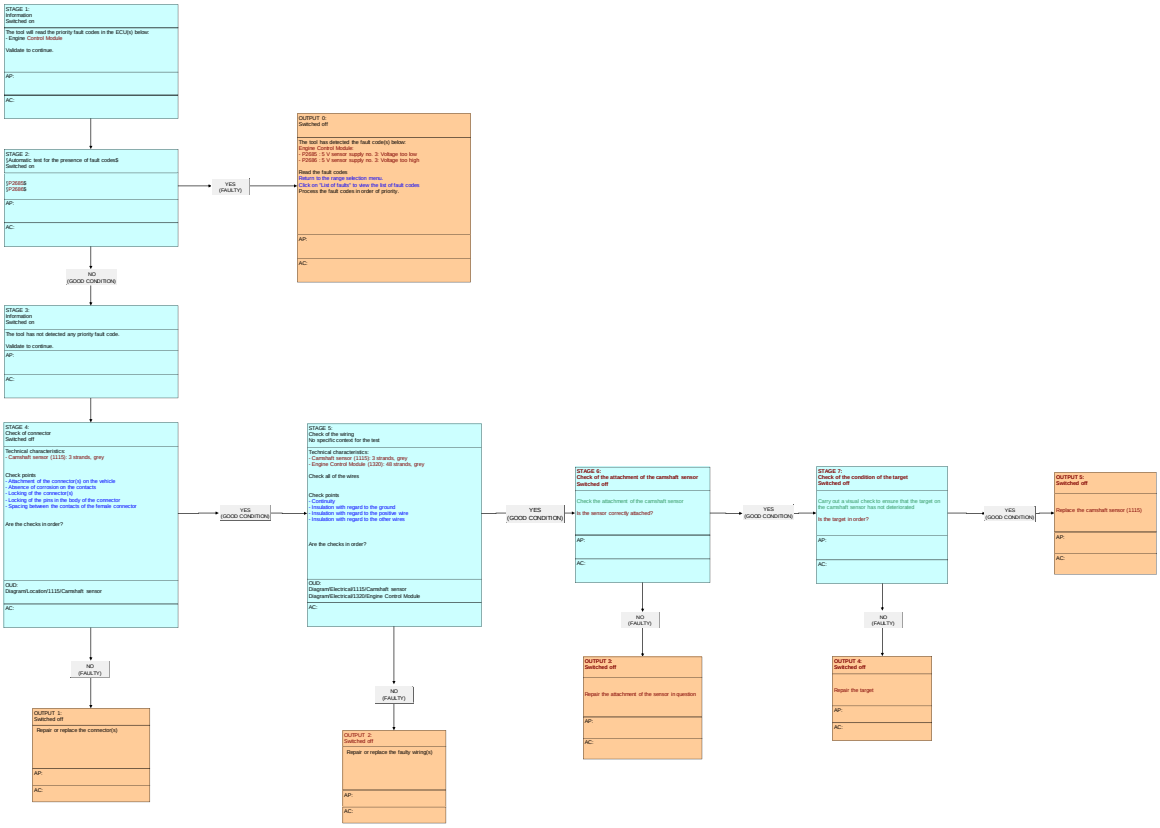

INFORMATION : FAULT CODE P0405 (ENGINE MANAGEMENT ECU)

SPECIAL FEATURE :

FOR : 1PMJ - B0FBM : DV6C TURBO DIESEL

FOR : 1CMJ - B0FBM : DV6C TURBO DIESEL

FOR : 1CB7 - B0FBM : DV6C TURBO DIESEL

FOR : 1CX7 - B0FBM : DV6C TURBO DIESEL

FOR : 1C58 - B0FBM : DV6C TURBO DIESEL

FOR : 1PT7 - B0FBM : DV6C TURBO DIESEL

FOR : 1PW2 - B0FBM : DV6C TURBO DIESEL

FOR : 1CB8 - B0FBM : DV6C TURBO DIESEL

FOR : 1CXA - B0FBM : DV6C TURBO DIESEL

FOR : 1CYA - B0FBM : DV6C TURBO DIESEL

FOR : 1PTB - B0FBM : DV6C TURBO DIESEL

FOR : 1PTC - B0FBM : DV6C TURBO DIESEL

FOR : 1PIA - B0FBM : DV6C TURBO DIESEL

Engine ECU CONTINENTAL SID 807 branch 2	
Fault code	P0405
After sales description of the fault code	Measurement of the position of the EGR valve : Open circuit or short circuit to earth
Description of the diagnostics	Voltage less than 0,2 V for 500 ms
Conditions of activation of the diagnostics	Ignition switched on
Conditions of disappearance of the fault	Driving for 5 minutes
Down-grade modes if fault present	Closing of the EGR (exhaust gas recycling) valve
	Switching of the turbocharging pressure regulation to controlled mode
	Deactivation of the request for regeneration of the particle filter from the diagnostic tool
Switching on of the	

warning lamp and/or warning message	Warning lamp MIL
Main customer complaints likely	Noise
	Slightly higher fuel consumption
	Smoke from the exhaust
	Absence of automatic stopping of the internal combustion engine (If the vehicle has the Stop and Start system)
Suspect areas	Exhaust gas recycling valve
	Electrical harness
	Connectors

Fault code(s): P0405 or P0406

Reminder DTC

Do not fill in this section for the FLOW CHART phase

DTC no.	Aftersales text of the DTC	Code type	Conditions for fault finding	Downgraded mode after a fault is memorised	Lamp on / Warning light	Suspected areas Major control loops	The client effects(Symptoms) associated with the DTCs	Fault code(s) to be dealt with before working through this flow chart	Tools required
P0405	EGR valve position sensor: Open circuit or short-circuit to ground	03							
P0406	EGR valve position sensor: Short-circuit to positive	03							

PRE-CHECK

FLOW CHART Test procedure

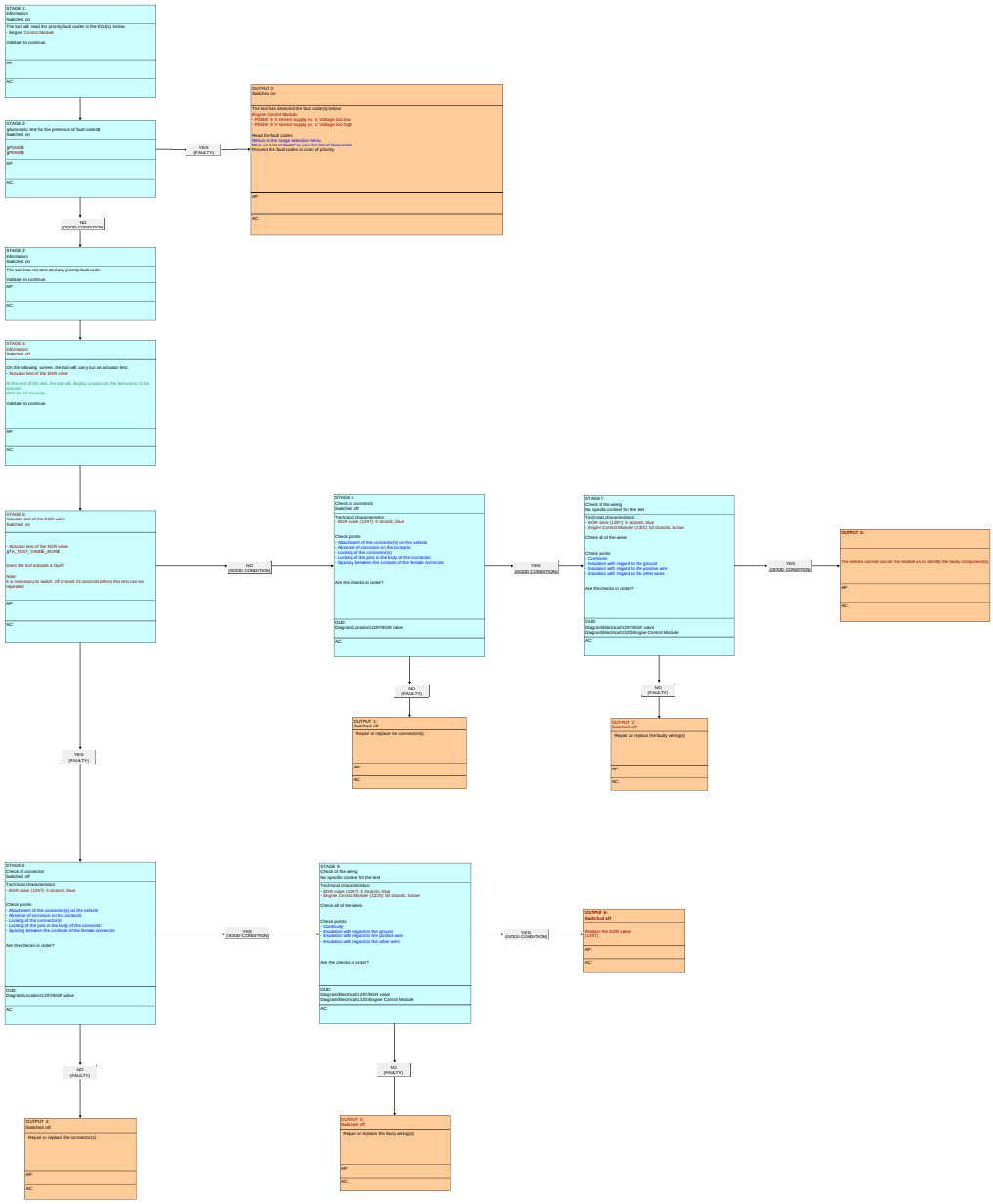

INFORMATION : FAULT CODE P0406 (ENGINE ECU)

SPECIAL FEATURE :

FOR : 1PMJ - B0FBM : DV6C TURBO DIESEL

FOR : 1CMJ - B0FBM : DV6C TURBO DIESEL

FOR : 1CB7 - B0FBM : DV6C TURBO DIESEL

FOR : 1CX7 - B0FBM : DV6C TURBO DIESEL

FOR : 1C58 - B0FBM : DV6C TURBO DIESEL

FOR : 1PT7 - B0FBM : DV6C TURBO DIESEL

FOR : 1PW2 - B0FBM : DV6C TURBO DIESEL

FOR : 1CB8 - B0FBM : DV6C TURBO DIESEL

FOR : 1CXA - B0FBM : DV6C TURBO DIESEL

FOR : 1CYA - B0FBM : DV6C TURBO DIESEL

FOR : 1PTB - B0FBM : DV6C TURBO DIESEL

FOR : 1PTC - B0FBM : DV6C TURBO DIESEL

FOR : 1PIA - B0FBM : DV6C TURBO DIESEL

Engine ECU CONTINENTAL SID 807 branch 2	
Fault code	P0406
After sales description of the fault code	Measurement of the position of the EGR valve : Short circuit to positive
Description of the diagnostics	Voltage higher than 4,8 V for 500 ms
Conditions of activation of the diagnostics	Ignition switched on
Conditions of disappearance of the fault	Driving for 5 minutes
Down-grade modes if fault present	Closing of the EGR (exhaust gas recycling) valve
	Switching of the turbocharging pressure regulation to controlled mode
	Deactivation of the request for regeneration of the particle filter from the diagnostic tool
Switching on of the	

warning lamp and/or warning message	Warning lamp MIL
Main customer complaints likely	Jerking/stalling
	Noise
Suspect areas	Exhaust gas recycling valve
	Electrical harness
	Connectors

Fault code(s): P0405 or P0406

Reminder DTC

Do not fill in this section for the FLOW CHART phase

DTC no.	Aftersales text of the DTC	Multiple type	Conditions for fault finding	Downgraded mode after a fault is memorised	Driver Warning Lamp	Suspected areas Major control loops	The client «The(s) symptom(s) associated with the DTC»	Fault code(s) to be dealt with before working through this flow chart	Tools required
P0405	EGR valve position sensor: Open circuit or short-circuit to ground	no							
P0406	EGR valve position sensor: Short-circuit to positive	no							

PRE-CHECK
FLOW CHART Test procedure

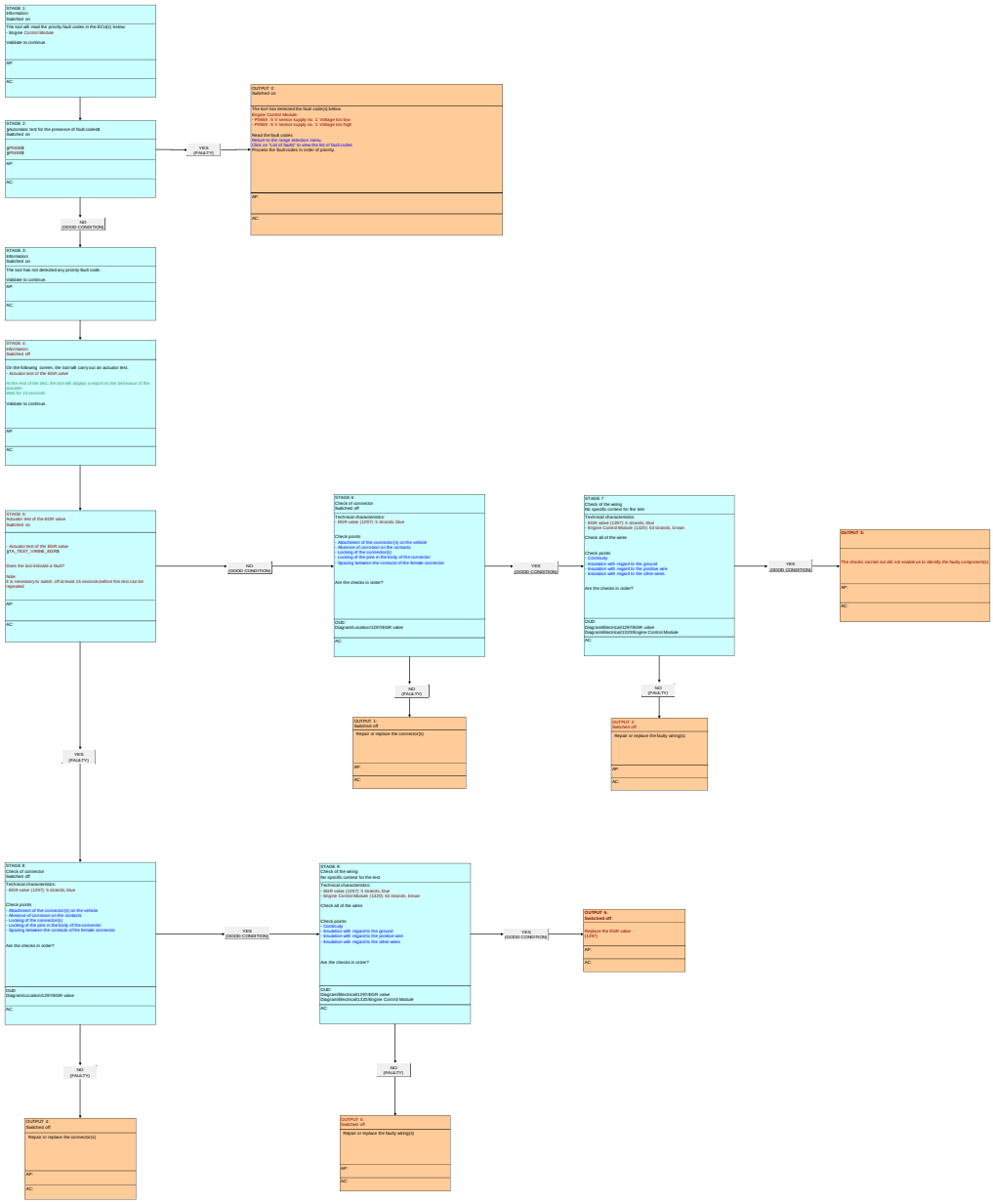

INFORMATION : FAULT CODE P0409 (ENGINE MANAGEMENT ECU)

SPECIAL FEATURE :

FOR : 1PMJ - B0FBM : DV6C TURBO DIESEL

FOR : 1CMJ - B0FBM : DV6C TURBO DIESEL

FOR : 1CB7 - B0FBM : DV6C TURBO DIESEL

FOR : 1CX7 - B0FBM : DV6C TURBO DIESEL

FOR : 1C58 - B0FBM : DV6C TURBO DIESEL

FOR : 1PT7 - B0FBM : DV6C TURBO DIESEL

FOR : 1PW2 - B0FBM : DV6C TURBO DIESEL

FOR : 1CB8 - B0FBM : DV6C TURBO DIESEL

FOR : 1CXA - B0FBM : DV6C TURBO DIESEL

FOR : 1CYA - B0FBM : DV6C TURBO DIESEL

FOR : 1PTB - B0FBM : DV6C TURBO DIESEL

FOR : 1PTC - B0FBM : DV6C TURBO DIESEL

FOR : 1PIA - B0FBM : DV6C TURBO DIESEL

Engine ECU CONTINENTAL SID 807 branch 2	
Fault code	P0409
After sales description of the fault code	EGR valve : Valve detected jammed closed during the ECU switching to dormant mode phase
Description of the diagnostics	Sticking of the exhaust gas recycling valve in the low position detected by the impossibility to reach 90% in 1s
Conditions of activation of the diagnostics	Just after switching off the engine, without restarting within 1 min
Conditions of disappearance of the fault	Start the engine and let it run for 4 min, then stop the engine and wait for the engine ECU to go into sleep phase for 1 min
Down-grade modes if fault present	-
Switching on of the warning lamp and/or warning message	-

Main customer complaints likely	Starting problem
	Jerking/stalling
	Lack of power
Suspect areas	Exhaust gas recycling valve
	Electrical harness
	Connectors

Fault code(s): P0490 or P12B4 or P0409

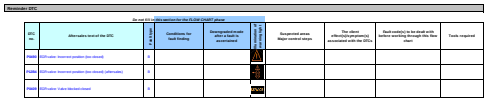

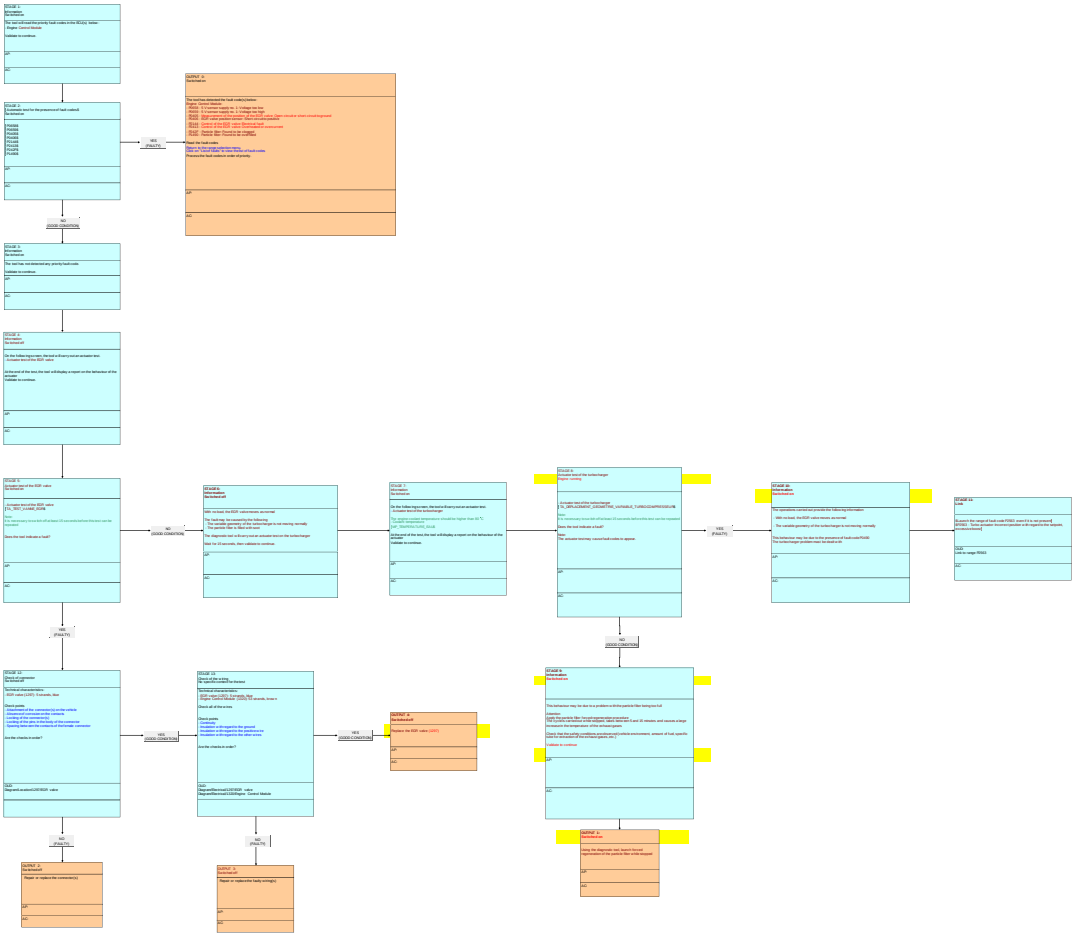

INFORMATION : FAULT CODE P0461 (ENGINE MANAGEMENT ECU)

SPECIAL FEATURE :

FOR : 1PMJ - B0FBM : DV6C TURBO DIESEL

FOR : 1CMJ - B0FBM : DV6C TURBO DIESEL

FOR : 1CB7 - B0FBM : DV6C TURBO DIESEL

FOR : 1CX7 - B0FBM : DV6C TURBO DIESEL

FOR : 1C58 - B0FBM : DV6C TURBO DIESEL

FOR : 1PT7 - B0FBM : DV6C TURBO DIESEL

FOR : 1PW2 - B0FBM : DV6C TURBO DIESEL

FOR : 1CB8 - B0FBM : DV6C TURBO DIESEL

FOR : 1CXA - B0FBM : DV6C TURBO DIESEL

FOR : 1CYA - B0FBM : DV6C TURBO DIESEL

FOR : 1PTB - B0FBM : DV6C TURBO DIESEL

FOR : 1PTC - B0FBM : DV6C TURBO DIESEL

FOR : 1PIA - B0FBM : DV6C TURBO DIESEL

Engine ECU CONTINENTAL SID 807 branch 2	
Fault code	P0461
After sales description of the fault code	Intersystems CAN : Fuel level information incorrect or absent
Description of the diagnostics	Information not received or received invalid by the engine management ECU on the CAN
Conditions of activation of the diagnostics	Ignition switched on
Conditions of disappearance of the fault	Driving for 5 minutes
Down-grade modes if fault present	-
Switching on of the warning lamp and/or warning message	-

Main customer complaints likely	Incorrect fuel level indication
Suspect areas	Engine ECU
	Intersystem CAN network

Fault code(s): P0461

Reminder DTC

Do not fill in this section for the FLOW CHART phase

DTC no.	Aftersales text of the DTC	Fault type	Conditions for fault finding	Downgraded mode after a fault is ascertained	Illumination of warning light	Suspected areas Major control steps	The client effect(s)/symptom(s) associated with the DTCs	Fault code(s) to be dealt with before working through this flow chart	Tools required
P0461	CAN inter-system network: Information on fuel level incorrect or missing	EE:							
					SERVICE				

PRE-CHECK

FLOW CHART Test procedure

STAGE 1:
Information
No specific context for the test

This fault is present in the Engine Control Module because the built-in systems interface informs it, via the CAN network, of an electrical problem in the fuel gauge

Therefore deal with the appropriate built-in systems interface faults

AP:

AC:

INFORMATION : FAULT CODE P0489 (ENGINE MANAGEMENT ECU)

SPECIAL FEATURE :

FOR : 1PMJ - B0FBM : DV6C TURBO DIESEL

FOR : 1CMJ - B0FBM : DV6C TURBO DIESEL

FOR : 1CB7 - B0FBM : DV6C TURBO DIESEL

FOR : 1CX7 - B0FBM : DV6C TURBO DIESEL

FOR : 1C58 - B0FBM : DV6C TURBO DIESEL

FOR : 1PT7 - B0FBM : DV6C TURBO DIESEL

FOR : 1PW2 - B0FBM : DV6C TURBO DIESEL

FOR : 1CB8 - B0FBM : DV6C TURBO DIESEL

FOR : 1CXA - B0FBM : DV6C TURBO DIESEL

FOR : 1CYA - B0FBM : DV6C TURBO DIESEL

FOR : 1PTB - B0FBM : DV6C TURBO DIESEL

FOR : 1PTC - B0FBM : DV6C TURBO DIESEL

FOR : 1PIA - B0FBM : DV6C TURBO DIESEL

Engine ECU CONTINENTAL SID 807 branch 2	
Fault code	P0489
After sales description of the fault code	EGR valve : Position incorrect (too open)
Description of the diagnostics	The position measured is less than the reference by more than 15 % for 5 seconds
Conditions of activation of the diagnostics	engine running
Conditions of disappearance of the fault	Driving for 5 minutes remaining under an engine speed of 4000 rpm at half load
	Closing of the EGR (exhaust gas recycling) valve
	Irreversible deactivation of the vehicle speed limiter
	Irreversible deactivation of the vehicle cruise control
	Deactivation of taking account of the tight spot information
	Switching of the turbocharging pressure regulation to controlled mode

Down-grade modes if fault present	Switching to fuel "normal reduced flow" mode
	Deactivation of the request for regeneration of the particle filter from the diagnostic tool
	Deactivation of the "easy-move" (electric parking brake) functionality
	Function for limitation of the static torque for the protection of the gearbox
Switching on of the warning lamp and/or warning message	Warning lamp MIL
	"SERVICE" warning lamp
Main customer complaints likely	Jerking/stalling
	Smoke from the exhaust
	Noise
	Lack of power
	Starting problem
	Problem with automatic restarting of the internal combustion engine (If the vehicle has the Stop and Start system)
Suspect areas	Exhaust gas recycling valve
	Electrical harness
	Connectors

Fault code(s): P0489 or P12B3 or P1162

Reminder DTC

Do not do this section for the FLOW CHART phase

DTC no.	Aftersales text of the DTC	Fault type	Conditions for fault finding	Downgraded mode after a fault is memorised	Lamp on if warning	Suspected areas Major control loops	The client effect(s)/symptom(s) associated with the DTCs	Fault code(s) to be dealt with before working through this flow chart	Tools required
P0489	EGR valve: Incorrect position (too open)	A							
P12B3	EGR valve: Incorrect position (too open) (aftersales)	A							
P1162	EGR valve: Blocked open	A							

PRE-CHECK
FLOW CHART Test procedure

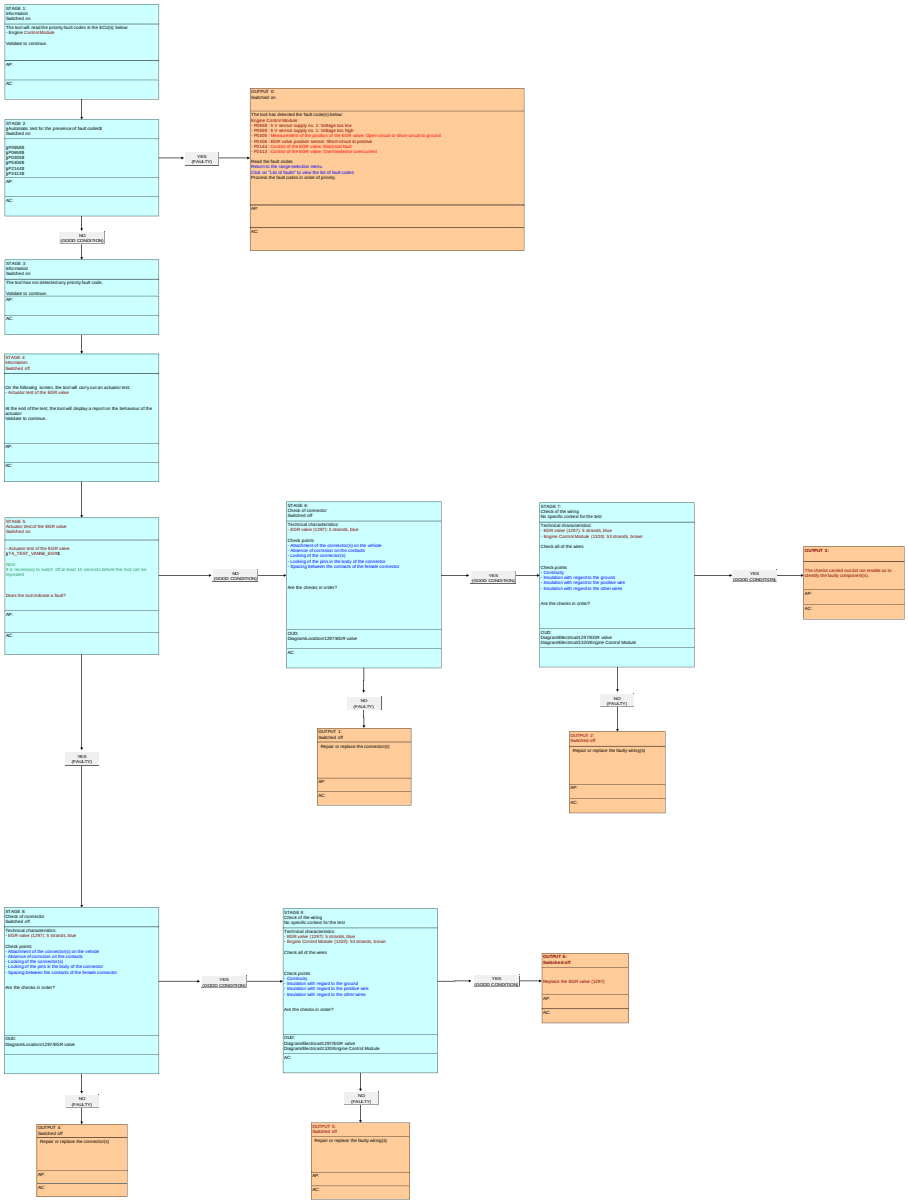

INFORMATION : FAULT CODE P0490 (ENGINE MANAGEMENT ECU)

SPECIAL FEATURE :

FOR : 1PMJ - B0FBM : DV6C TURBO DIESEL

FOR : 1CMJ - B0FBM : DV6C TURBO DIESEL

FOR : 1CB7 - B0FBM : DV6C TURBO DIESEL

FOR : 1CX7 - B0FBM : DV6C TURBO DIESEL

FOR : 1C58 - B0FBM : DV6C TURBO DIESEL

FOR : 1PT7 - B0FBM : DV6C TURBO DIESEL

FOR : 1PW2 - B0FBM : DV6C TURBO DIESEL

FOR : 1CB8 - B0FBM : DV6C TURBO DIESEL

FOR : 1CXA - B0FBM : DV6C TURBO DIESEL

FOR : 1CYA - B0FBM : DV6C TURBO DIESEL

FOR : 1PTB - B0FBM : DV6C TURBO DIESEL

FOR : 1PTC - B0FBM : DV6C TURBO DIESEL

FOR : 1PIA - B0FBM : DV6C TURBO DIESEL

Engine ECU CONTINENTAL SID 807 branch 2	
Fault code	P0490
After sales description of the fault code	EGR valve : Position incorrect (too closed)
Description of the diagnostics	The position measured is greater than the reference by more than 40 % for 5 seconds
Conditions of activation of the diagnostics	Engine running
Conditions of disappearance of the fault	Driving for 5 minutes remaining under an engine speed of 4000 rpm at half load
Down-grade modes if fault present	Closing of the EGR (exhaust gas recycling) valve
	Reversible deactivation of the vehicle speed limiter
	Reversible deactivation of the vehicle cruise control
	Switching of the turbocharging pressure regulation to controlled mode
	Deactivation of the "easy-move" (electric parking brake)

	functionality
	For a gearbox with engine speed regulation (automatic gearbox or piloted manual gearbox), limitation of the torque sent to the gearbox
Switching on of the warning lamp and/or warning message	Warning lamp MIL
Main customer complaints likely	Jerking/stalling
	Smoke from the exhaust
	Lack of power
	Noise
	Slightly higher fuel consumption
	Absence of automatic stopping of the internal combustion engine (If the vehicle has the Stop and Start system)
	Problem with automatic restarting of the internal combustion engine (If the vehicle has the Stop and Start system)
Suspect areas	Exhaust gas recycling valve
	Particle filter overloaded
	Electrical harness
	Connectors

Fault code(s): P0490 or P12B4 or P0409

Remember DTC:

Be sure DTC is since last time the FLOW CHART phase

DTC no.	Alternative text of the DTC	P or B type	Conditions for fault finding	Downgraded areas when DTC is encountered	Suspected areas Major control circuits	The other affected areas (DTC encountered with the DTC)	Fault code(s) to be dealt with before working on the fault in this flow table	Tools required
P0490	EGR valve: Incorrect position (low closed)	P						
P12B4	EGR valve: Incorrect position (low closed) (alternative)	P						
P0409	EGR valve: Valve blocked closed	P						

PRECHECK

FLOW CHART Test procedure

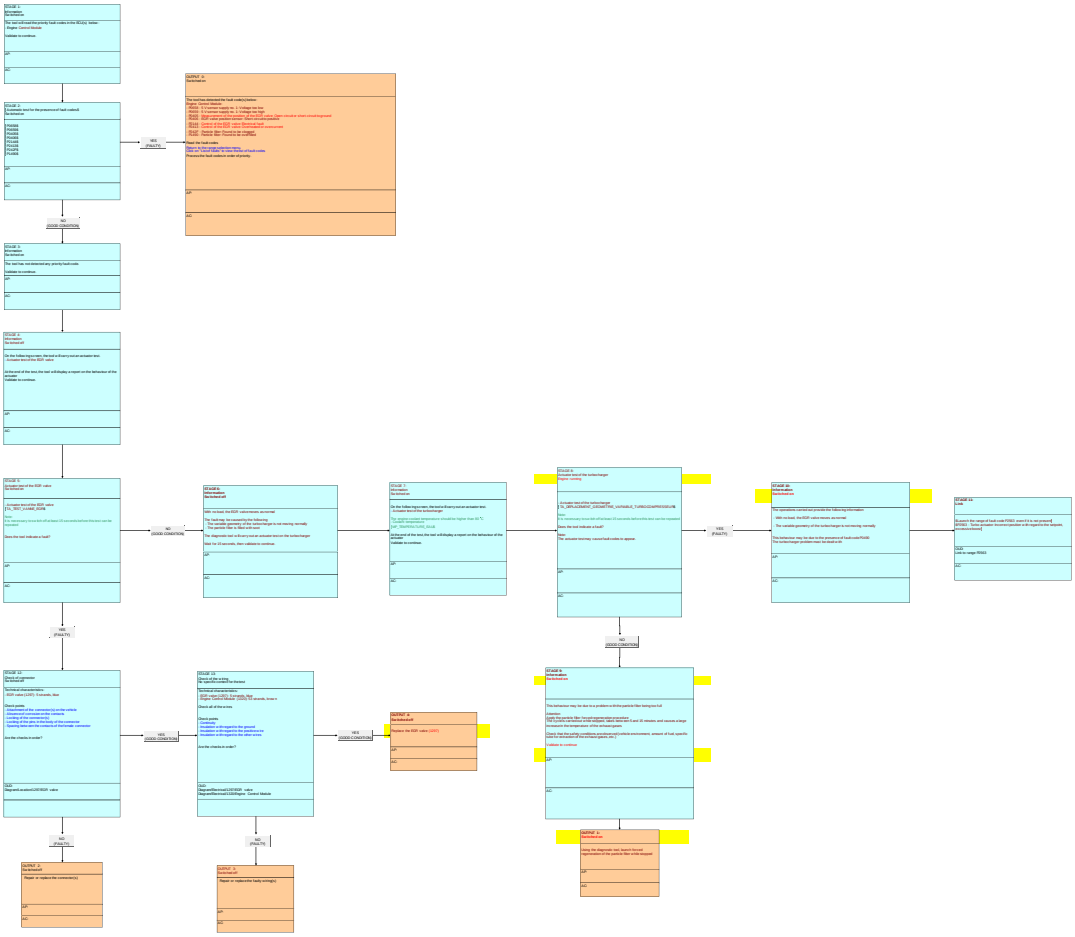

INFORMATION : FAULT CODE P0500 (ENGINE ECU)

SPECIAL FEATURE :

FOR : 1PMJ - B0FBM : DV6C TURBO DIESEL

FOR : 1CMJ - B0FBM : DV6C TURBO DIESEL

FOR : 1CB7 - B0FBM : DV6C TURBO DIESEL

FOR : 1CX7 - B0FBM : DV6C TURBO DIESEL

FOR : 1C58 - B0FBM : DV6C TURBO DIESEL

FOR : 1PT7 - B0FBM : DV6C TURBO DIESEL

FOR : 1PW2 - B0FBM : DV6C TURBO DIESEL

FOR : 1CB8 - B0FBM : DV6C TURBO DIESEL

FOR : 1CXA - B0FBM : DV6C TURBO DIESEL

FOR : 1CYA - B0FBM : DV6C TURBO DIESEL

FOR : 1PTB - B0FBM : DV6C TURBO DIESEL

FOR : 1PTC - B0FBM : DV6C TURBO DIESEL

FOR : 1PIA - B0FBM : DV6C TURBO DIESEL

Engine ECU CONTINENTAL SID 807 branch 2	
Fault code	P0500
After sales description of the fault code	Intersystems CAN : Speed information incorrect or absent
Description of the diagnostics	Information not received or received invalid by the engine management ECU on the CAN
Conditions of activation of the diagnostics	Ignition switched on
Conditions of disappearance of the fault	Driving for 5 minutes
Down-grade modes if fault present	Irreversible deactivation of the vehicle speed curbing function
	Irreversible deactivation of the vehicle speed limiter
	Irreversible deactivation of the vehicle cruise control
	Sending of the information "torque uncertain" on the CAN network

Switching on of the warning lamp and/or warning message	Warning lamp MIL
Main customer complaints likely	Jerking/stalling
	Lack of power
Suspect areas	Engine ECU
	Intersystem CAN network

Fault code(s): U0315 or U1313 or P0500

Reminder DTC

Do not fill in this section for the FLOW CHART phase

DTC no.	Aftersales text of the DTC	Fault type	Conditions for fault finding	Downgraded mode after a fault is ascertained	Illumination or warning light	Suspected areas Major control steps	The client effect(s)/symptom(s) associated with the DTCs	Fault code(s) to be dealt with before working through this flow chart	Tools required
U0315	CAN inter-system network: Length error or value forbidden by the ABS/ESP framework with an OBD impact	F							
U1313	CAN inter-system network: Length error or value forbidden by the ABS/ESP framework	F							
P0500	CAN inter-system network: Vehicle speed information incorrect or missing	F							

PRE-CHECK

FLOW CHART Test procedure

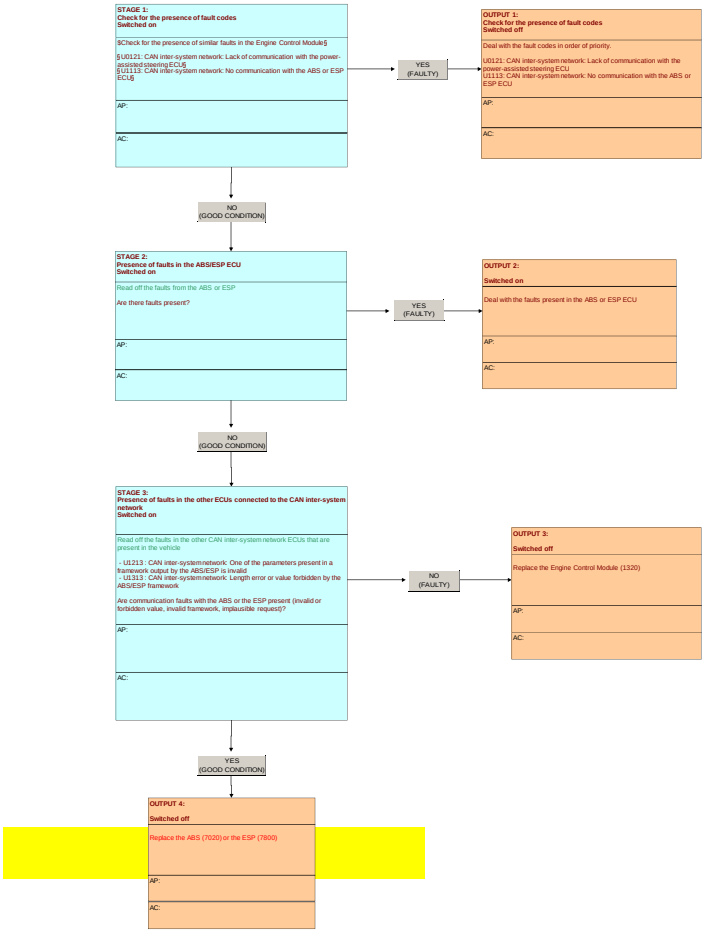

INFORMATION : FAULT CODE P050B (ENGINE MANAGEMENT ECU)

SPECIAL FEATURE :

FOR : 1PMJ - B0FBM : DV6C TURBO DIESEL

FOR : 1CMJ - B0FBM : DV6C TURBO DIESEL

FOR : 1CB7 - B0FBM : DV6C TURBO DIESEL

FOR : 1CX7 - B0FBM : DV6C TURBO DIESEL

FOR : 1C58 - B0FBM : DV6C TURBO DIESEL

FOR : 1PT7 - B0FBM : DV6C TURBO DIESEL

FOR : 1PW2 - B0FBM : DV6C TURBO DIESEL

FOR : 1CB8 - B0FBM : DV6C TURBO DIESEL

FOR : 1CXA - B0FBM : DV6C TURBO DIESEL

FOR : 1CYA - B0FBM : DV6C TURBO DIESEL

FOR : 1PTB - B0FBM : DV6C TURBO DIESEL

FOR : 1PTC - B0FBM : DV6C TURBO DIESEL

FOR : 1PIA - B0FBM : DV6C TURBO DIESEL

Engine ECU CONTINENTAL SID 807 branch 2	
Fault code	P050B
After sales description of the fault code	Starting monitoring : Starting time too long
Description of the diagnostics	Starting time longer than 1,8 seconds when the exterior temperature is 5 °C (Thresholds weighted according to the engine coolant temperature)
Conditions of activation of the diagnostics	Under starter
Conditions of disappearance of the fault	Engine started from cold 10 times in succession
Down-grade modes if fault present	-
Switching on of the warning lamp and/or warning	-

message	
Main customer complaints likely	Starting problem
Suspect areas	Pre-post heating relay
	Preheater plugs
	Electrical harnesses
	Connectors

Fault code(s): P050B

Reminder DTC

Do not fill in this section for the FLOW CHART phase

DTC no.	Aftersales text of the DTC	Fault type	Conditions for fault finding	Downgraded mode after a fault is ascertained	Illumination of warning light	Suspected areas Major control steps	The client effect(s)/symptom(s) associated with the DTCs	Fault code(s) to be dealt with before working through this flow chart	Tools required
P050B	Monitoring of start-up: Start-up time too long	EE							
					SERVICE				

PRE-CHECK

FLOW CHART Test procedure

STAGE 1:
Cross reference

This fault code confirms that start-up is difficult

Refer to the symptom relating to the start-up problem
§Link to flow chart Chapeau GMPA Euro 5 J3J4$

AP:
§Link to flow chart Chapeau GMPA Euro 5 J3J4$

AC:

INFORMATION : FAULT CODE P0516 (ENGINE ECU)

Engine ECU CONTINENTAL SID 807 branch 2	
Fault code	P0516
After sales description of the fault code	Battery temperature sensor : Voltage below the minimum threshold
Description of the diagnostics	Voltage less than 0,1 V for 200 ms
Conditions of activation of the diagnostics	At least one of the following conditions must be fulfilled - Ignition on - With the engine running
Conditions of disappearance of the fault	At least one of the following conditions must be fulfilled - Ignition on - With the engine running
Down-grade modes if fault present	Power strategy deactivation
Switching on of the warning lamp and/or warning message	-
Main customer complaints likely	Jerking/stalling
	Lack of power
	Starting problem
Suspect areas	Battery temperature sensor
	Electrical harnesses
	Connectors

Fault code(s): P0516 or P0517 or P0A88 or P0A89

Reminder DTC

Do not fill in this section for the FLOW CHART phase

DTC no.	Alternative text of the DTC	Front line	Conditions for fault finding	Downgraded mode after a fault is ascertained	Driving strategy	Suspected areas Major control steps	The client effects/symptom(s) associated with the DTCs	Fault code(s) to be dealt with before working through this flow chart	Tools required
P0516	Battery temperature sensor: Threshold lower than the minimum threshold	NO							
P0517	Battery temperature sensor: Threshold higher than the maximum threshold	NO							
P0A88	Battery: Voltage lower than the minimum threshold	NO							
P0A89	Battery: Voltage higher than the minimum threshold	NO							

PRE-CHECK

FLOW CHART Test procedure

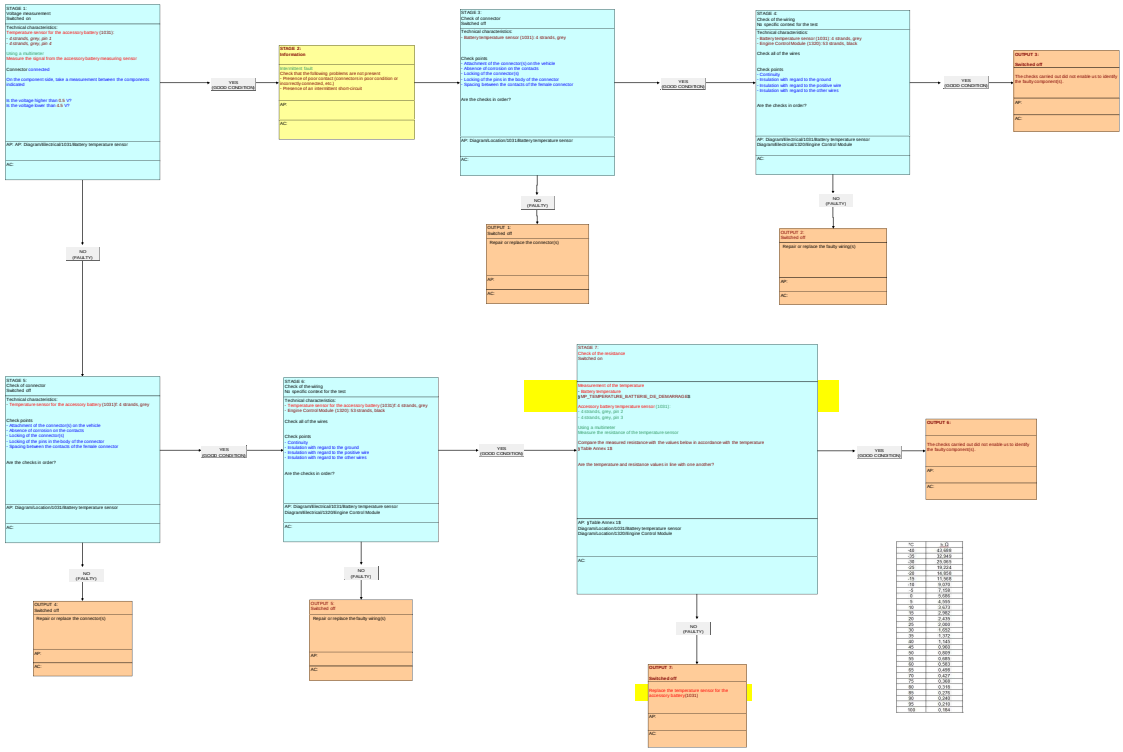

INFORMATION : FAULT CODE P0517 (ENGINE ECU)

Engine ECU CONTINENTAL SID 807 branch 2	
Fault code	P0517
After sales description of the fault code	Battery temperature sensor : Voltage higher than the maximum threshold
Description of the diagnostics	Voltage higher than 4,9 V for 200 ms
Conditions of activation of the diagnostics	At least one of the following conditions must be fulfilled - Ignition on - Engine running
Conditions of disappearance of the fault	At least one of the following conditions must be fulfilled - Ignition on - Engine running
Down-grade modes if fault present	Power strategy deactivation
Switching on of the warning lamp and/or warning message	-
Main customer complaints likely	Jerking/stalling
	Lack of power
	Starting problem
Suspect areas	Battery temperature sensor
	Electrical harnesses
	Connectors

Fault code(s): P0516 or P0517 or P0A88 or P0A89

Reminder DTC

Do not fill in this section for the FLOW CHART phase

DTC no.	Alternative text of the DTC	Front line	Conditions for fault finding	Downgraded mode after a fault is ascertained	Driving strategy	Suspected areas Major control steps	The client effects/symptom(s) associated with the DTCs	Fault code(s) to be dealt with before working through this flow chart	Tools required
P0516	Battery temperature sensor: Threshold lower than the minimum threshold	no							
P0517	Battery temperature sensor: Threshold higher than the maximum threshold	no							
P0A88	Battery: Voltage lower than the minimum threshold	no							
P0A89	Battery: Voltage higher than the minimum threshold	no							

PRE-CHECK

FLOW CHART Test procedure

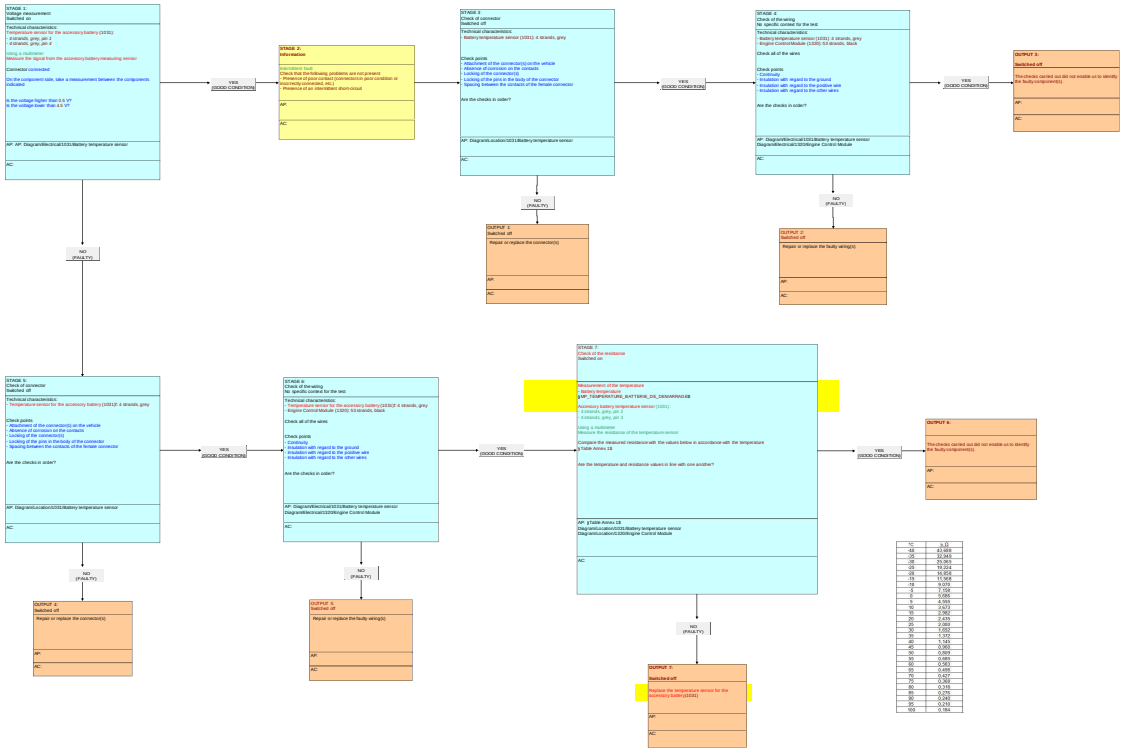

INFORMATION : FAULT CODE P0562 (ENGINE MANAGEMENT ECU)

SPECIAL FEATURE :

FOR : 1PMJ - B0FBM : DV6C TURBO DIESEL

FOR : 1CMJ - B0FBM : DV6C TURBO DIESEL

FOR : 1CB7 - B0FBM : DV6C TURBO DIESEL

FOR : 1CX7 - B0FBM : DV6C TURBO DIESEL

FOR : 1C58 - B0FBM : DV6C TURBO DIESEL

FOR : 1PT7 - B0FBM : DV6C TURBO DIESEL

FOR : 1PW2 - B0FBM : DV6C TURBO DIESEL

FOR : 1CB8 - B0FBM : DV6C TURBO DIESEL

FOR : 1CXA - B0FBM : DV6C TURBO DIESEL

FOR : 1CYA - B0FBM : DV6C TURBO DIESEL

FOR : 1PTB - B0FBM : DV6C TURBO DIESEL

FOR : 1PTC - B0FBM : DV6C TURBO DIESEL

FOR : 1PIA - B0FBM : DV6C TURBO DIESEL

Engine ECU CONTINENTAL SID 807 branch 2	
Fault code	P0562
After sales description of the fault code	Battery voltage measurement : System voltage too low
Description of the diagnostics	Battery voltage below 6 V for 2 s
Conditions of activation of the diagnostics	engine running
Conditions of disappearance of the fault	Driving for 5 minutes
Down-grade modes if fault present	Irreversible deactivation of the vehicle speed limiter
	Irreversible deactivation of the vehicle cruise control
	Irreversible deactivation of the vehicle speed curbing function
	Deactivation of taking account of the tight spot information
	Sending of the information "torque uncertain" on the CAN

	network
Switching on of the warning lamp and/or warning message	MIL
Main customer complaints likely	Jerking/stalling
	Malfunctioning of the idle
	Lack of power
	Starting problem
Suspect areas	Battery
	Alternator

Fault code(s): P0562 or P0563

Reminder DTC

Do not fill in this section for the FLOW CHART phase

DTC no.	Aftersales text of the DTC	Fault type	Conditions for fault finding	Downgraded mode after a fault is ascertained	Illumination or warning light	Suspected areas Major control steps	The client effect(s)/symptom(s) associated with the DTCs	Fault code(s) to be dealt with before working through this flow chart	Tools required
P0562	Battery: System voltage too low	EE							
P0563	Battery: System voltage too high	EE							
					SERVICE				

PRE-CHECK

FLOW CHART Test procedure

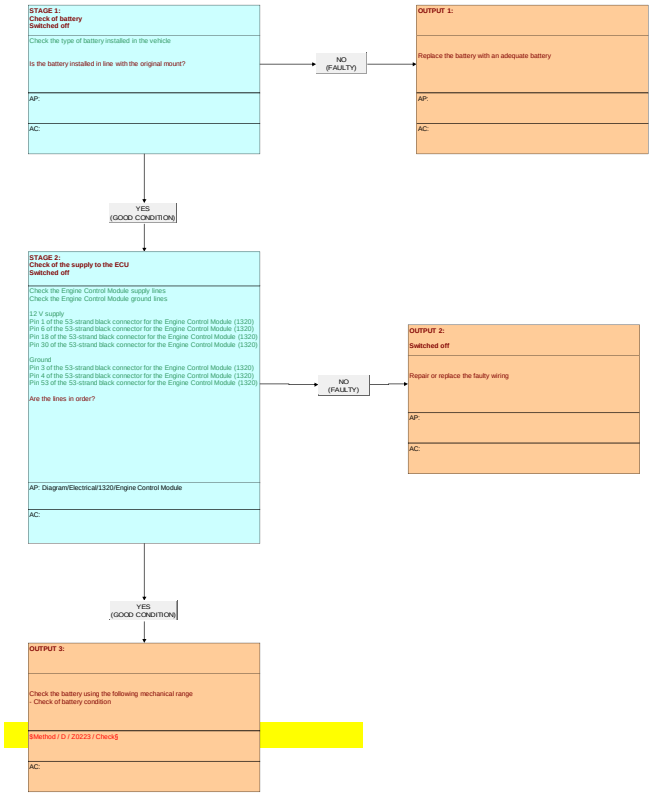

INFORMATION : FAULT CODE P0563 (ENGINE MANAGEMENT ECU)

SPECIAL FEATURE :

FOR : 1PMJ - B0FBM : DV6C TURBO DIESEL

FOR : 1CMJ - B0FBM : DV6C TURBO DIESEL

FOR : 1CB7 - B0FBM : DV6C TURBO DIESEL

FOR : 1CX7 - B0FBM : DV6C TURBO DIESEL

FOR : 1C58 - B0FBM : DV6C TURBO DIESEL

FOR : 1PT7 - B0FBM : DV6C TURBO DIESEL

FOR : 1PW2 - B0FBM : DV6C TURBO DIESEL

FOR : 1CB8 - B0FBM : DV6C TURBO DIESEL

FOR : 1CXA - B0FBM : DV6C TURBO DIESEL

FOR : 1CYA - B0FBM : DV6C TURBO DIESEL

FOR : 1PTB - B0FBM : DV6C TURBO DIESEL

FOR : 1PTC - B0FBM : DV6C TURBO DIESEL

FOR : 1PIA - B0FBM : DV6C TURBO DIESEL

Engine ECU CONTINENTAL SID 807 branch 2	
Fault code	P0563
After sales description of the fault code	Battery voltage measurement : System voltage too high
Description of the diagnostics	The voltage is higher than 18V for 2 seconds
Conditions of activation of the diagnostics	engine running
Conditions of disappearance of the fault	Driving for 5 minutes
Down-grade modes if fault present	Irreversible deactivation of the vehicle speed limiter
	Irreversible deactivation of the vehicle cruise control
	Irreversible deactivation of the vehicle speed curbing function
	Deactivation of taking account of the tight spot information
	Sending of the information "torque uncertain" on the CAN

	network
Switching on of the warning lamp and/or warning message	Warning lamp MIL
Main customer complaints likely	Jerking/stalling
	Malfunctioning of the idle
	Lack of power
	Starting problem
Suspect areas	Battery
	Alternator

Fault code(s): P0562 or P0563

Reminder DTC

Do not fill in this section for the FLOW CHART phase

DTC no.	Aftersales text of the DTC	Fault type	Conditions for fault finding	Downgraded mode after a fault is ascertained	Illumination or flashing light	Suspected areas Major control steps	The client effect(s)/symptom(s) associated with the DTCs	Fault code(s) to be dealt with before working through this flow chart	Tools required
P0562	Battery: System voltage too low	EE							
P0563	Battery: System voltage too high	EE							
					SERVICE				

PRE-CHECK

FLOW CHART Test procedure

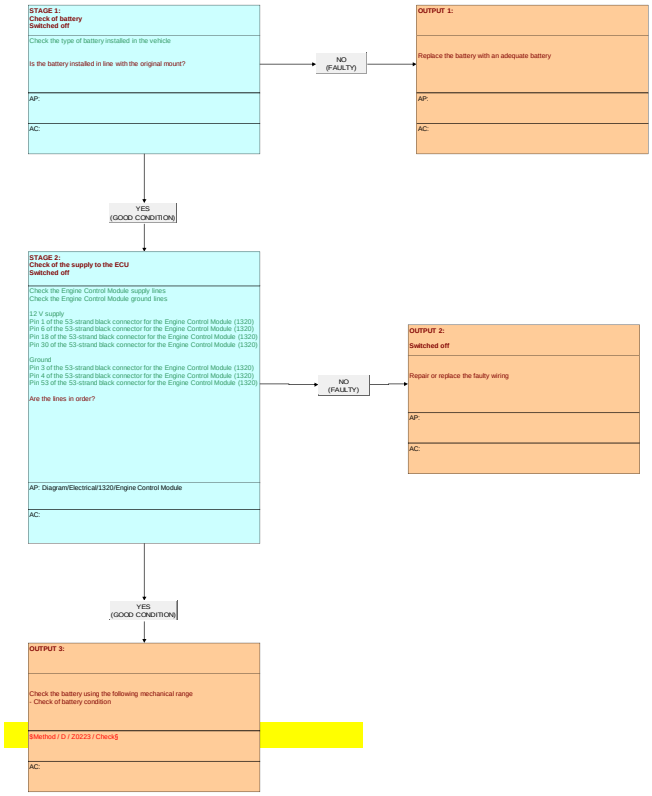

INFORMATION : FAULT CODE P0571 (ENGINE MANAGEMENT ECU)

SPECIAL FEATURE :

FOR : 1PMJ - B0FBM : DV6C TURBO DIESEL

FOR : 1CMJ - B0FBM : DV6C TURBO DIESEL

FOR : 1CB7 - B0FBM : DV6C TURBO DIESEL

FOR : 1CX7 - B0FBM : DV6C TURBO DIESEL

FOR : 1C58 - B0FBM : DV6C TURBO DIESEL

FOR : 1PT7 - B0FBM : DV6C TURBO DIESEL

FOR : 1PW2 - B0FBM : DV6C TURBO DIESEL

FOR : 1CB8 - B0FBM : DV6C TURBO DIESEL

FOR : 1CXA - B0FBM : DV6C TURBO DIESEL

FOR : 1CYA - B0FBM : DV6C TURBO DIESEL

FOR : 1PTB - B0FBM : DV6C TURBO DIESEL

FOR : 1PTC - B0FBM : DV6C TURBO DIESEL

FOR : 1PIA - B0FBM : DV6C TURBO DIESEL

Engine ECU CONTINENTAL SID 807 branch 2	
Fault code	P0571
After sales description of the fault code	Intersystems CAN : Lack of coherence of the brake pedal position sent by the BSI
Description of the diagnostics	"main brake pedal switch out of service" information received by the engine management ECU on the CAN
Conditions of activation of the diagnostics	engine running
Conditions of disappearance of the fault	Driving for 5 minutes
Down-grade modes if fault present	Reversible deactivation of the vehicle cruise control
Switching on of the warning lamp and/or warning message	-

Main customer complaints likely	No effects immediately perceptible to the customer
	No automatic stopping of the internal combustion engine (If the vehicle has the Stop and Start system)
Suspect areas	Brake pedal switch
	Electrical harnesses
	Connectors

Fault code(s): U0322 or U1218 or U1318 or P0070 or P0571

Reminder DTC

Do not fill in this section for the FLOW CHART phase

DTC n/a	Aftersales text of the DTC	Fault type	Conditions for fault finding	Downgraded mode after a fault is ascertained	Warning light on dashboard	Suspected areas Major control steps	The client effect(s)/symptom(s) associated with the DTCs	Fault code(s) to be dealt with before working through this flow chart	Tools required
U0322	CAN inter-system network: Length error or value forbidden by the BSI framework with an OBD impact	F							
U1218	CAN inter-system network: One of the parameters present in a framework output by the BSI is invalid	F							
U1318	CAN inter-system network: Length error or value forbidden by the BSI framework	F							
P0070	CAN inter-system network: Invalid value for the external air temperature received by the CAN	F							
P0571	CAN inter-system network: Erroneous information on the main brake output by the BSI	F							

PRE-CHECK

FLOW CHART Test procedure

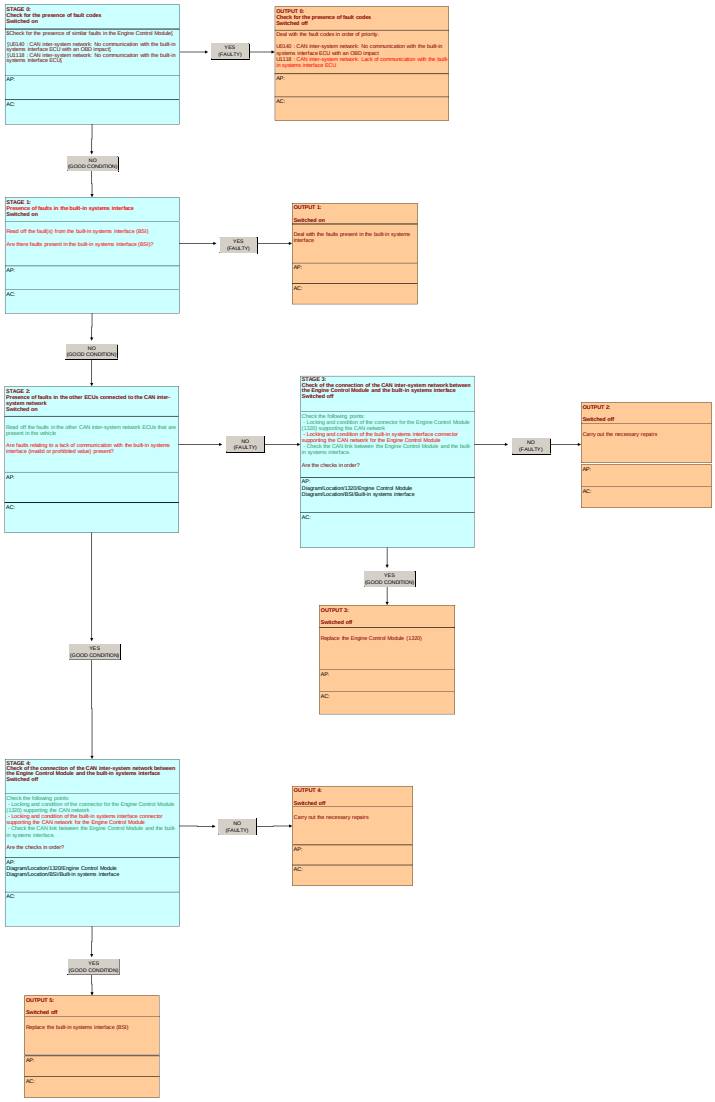

INFORMATION : FAULT CODE P0579 (ENGINE ECU)

Engine ECU CONTINENTAL SID 807 branch 2	
Fault code	P0579
After sales description of the fault code	Cruise control : Plausibility fault
Description of the diagnostics	Continuous signal on one of the vehicle cruise control buttons for 200 ms
Conditions of activation of the diagnostics	At least one of the following conditions must be fulfilled - Ignition on - With the engine running
Conditions of disappearance of the fault	At least one of the following conditions must be fulfilled - Ignition on - With the engine running
Down-grade modes if fault present	Irreversible deactivation of the vehicle cruise control
Switching on of the warning lamp and/or warning message	-
Main customer complaints likely	No effects immediately perceptible to the customer
Suspect areas	Cruise control steering wheel controls
	Engine ECU

Fault code(s): P0579

Remember DTC:

Be sure you have taken note of the DTCs mentioned in the FLOW CHART phase!

DTC no.	Alternative text of the DTC	Type of fault	Conditions for fault finding	Downgraded or auto reset DTC associated	Type of fault	Suspected areas Major control stages	The silent effect/consequences associated with the DTC	Fault code(s) to be dealt with before starting to diagnose this fault	Tools required
P0579	Cruise control: Flexibility fault				A				
					B				
					ENGINE				

PRE-CHECK

FLOW CHART: Test procedure

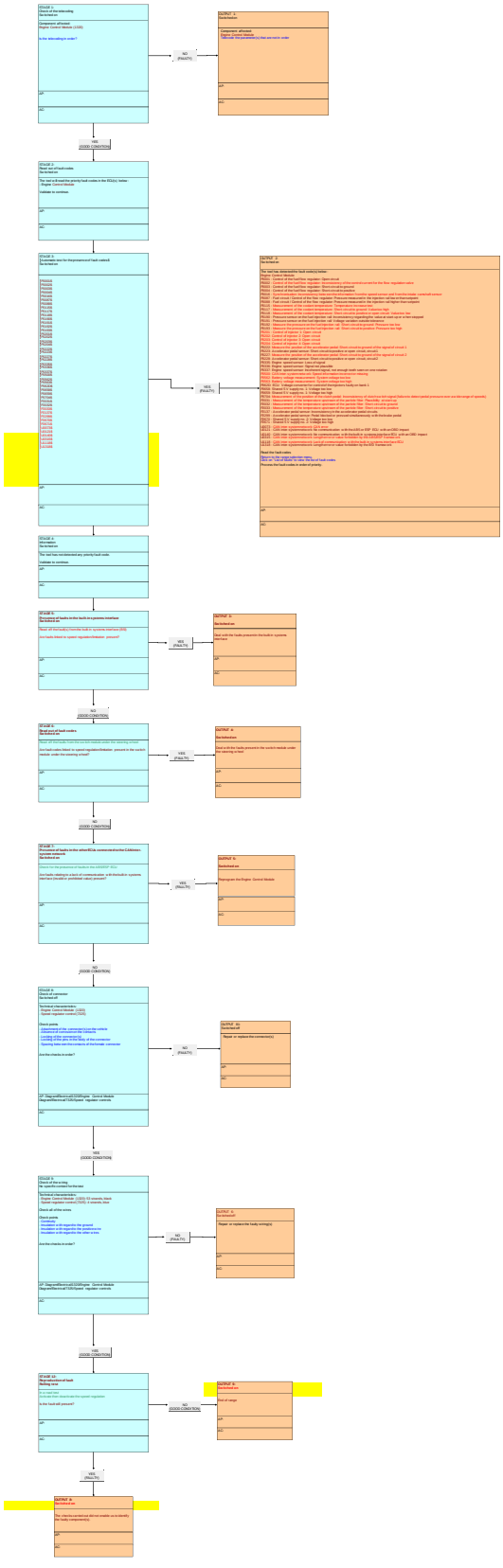

INFORMATION : FAULT CODE P0590 (ENGINE ECU)

Engine ECU CONTINENTAL SID 807 branch 2	
Fault code	P0590
After sales description of the fault code	Intersystems CAN : Vehicle cruise control fault
Description of the diagnostics	Button jammed for more than 60 s
Conditions of activation of the diagnostics	Ignition on
Conditions of disappearance of the fault	Driving for 5 min with the "vehicle speed limiter" button pressed
Down-grade modes if fault present	Reversible deactivation of the vehicle cruise control
Switching on of the warning lamp and/or warning message	-
Main customer complaints likely	No effects immediately perceptible to the customer
Suspect areas	Cruise control steering wheel controls

Fault code(s): P0590 or P0591 or P16C5 or P16C7

Reminder DTC

Do not st...ions for the FLOW CHART phase

DTC no.	Alternate text of the DTC	Fault type	Conditions for fault finding	Downgraded mode after a fault is ascertained	Illuminated Warning Lamp	Suspected areas Major control steps	The client ellm=[0]=gaujon[4] associated with the DTCs	Fault code[s] to be dealt with before working through this flow chart	Tools required
P0590	CAN inter-system network: Control fault in regulation of vehicle speed	F							
P0591	CAN inter-system network: Incorrect information on regulation of vehicle speed	F							
P16C5	CAN inter-system network: Filtering problem touch pin/count	F			DRIVE				
P16C7	CAN inter-system network: Poor vehicle configuration concerning the vehicle speed limiter and gearbox	F							

PRE-CHECK

FLOW CHART Test procedure

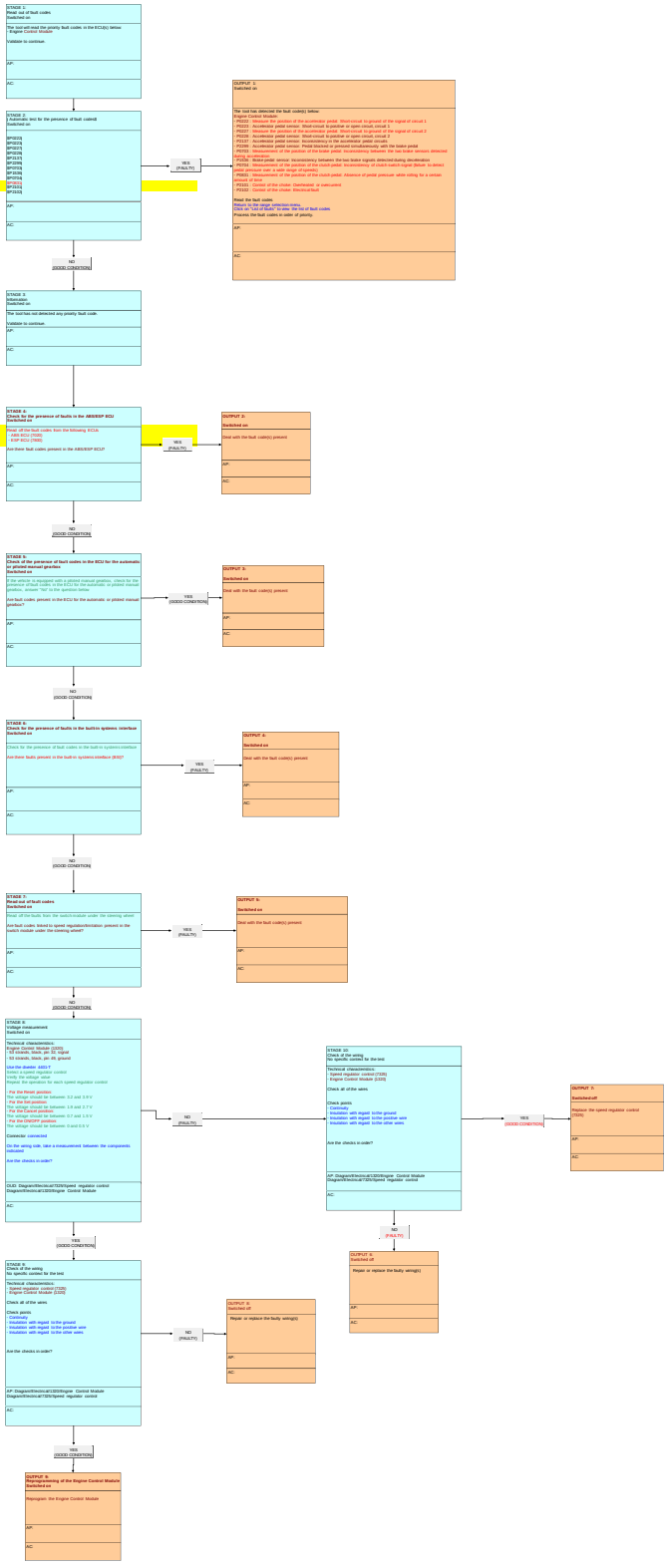

INFORMATION : FAULT CODE P0591 (ENGINE MANAGEMENT ECU)

SPECIAL FEATURE :

FOR : 1CMJ - B0FBM : DV6C TURBO DIESEL

FOR : 1PMJ - B0FBM : DV6C TURBO DIESEL

Engine ECU CONTINENTAL SID 807 branch 2	
Fault code	P0591
After sales description of the fault code	Intersystems CAN : Cruise control information
Description of the diagnostics	No detection of pressing of a button or of the neutral position for 100 ms
Conditions of activation of the diagnostics	Ignition on
Conditions of disappearance of the fault	Driving for 5 mins with presses of the "speed limiter" button
Down-grade modes if fault present	Reversible deactivation of the vehicle cruise control
Switching on of the warning lamp and/or warning message	-
Main customer complaints likely	No effects immediately perceptible to the customer
Suspect areas	Cruise control steering wheel controls
	Engine ECU

Fault code(s): P0590 or P0591 or P16C5 or P16C7

Reminder DTC

Do not st...ctics sections for the FLOW CHART phase

DTC no.	Alfanumerical of the DTC	Fail. type	Conditions for fault finding	Downgraded mode after a fault is ascertained	Engine Control Module	Suspected areas Major control steps	The client ellnv(ld)(regulation)(t) associated with the DTCs	Fault code(s) to be dealt with before working through this flow chart	Tools required
P0590	CAN inter-system network: Control fault in regulation of vehicle speed	F							
P0591	CAN inter-system network: Incorrect information on regulation of vehicle speed	F							
P16C5	CAN inter-system network: Filtering problem touch pin/cruise	F			DPCS				
P16C7	CAN inter-system network: Poor vehicle configuration concerning the vehicle speed limiter and gearbox	F							

PRE-CHECK

FLOW CHART Test procedure

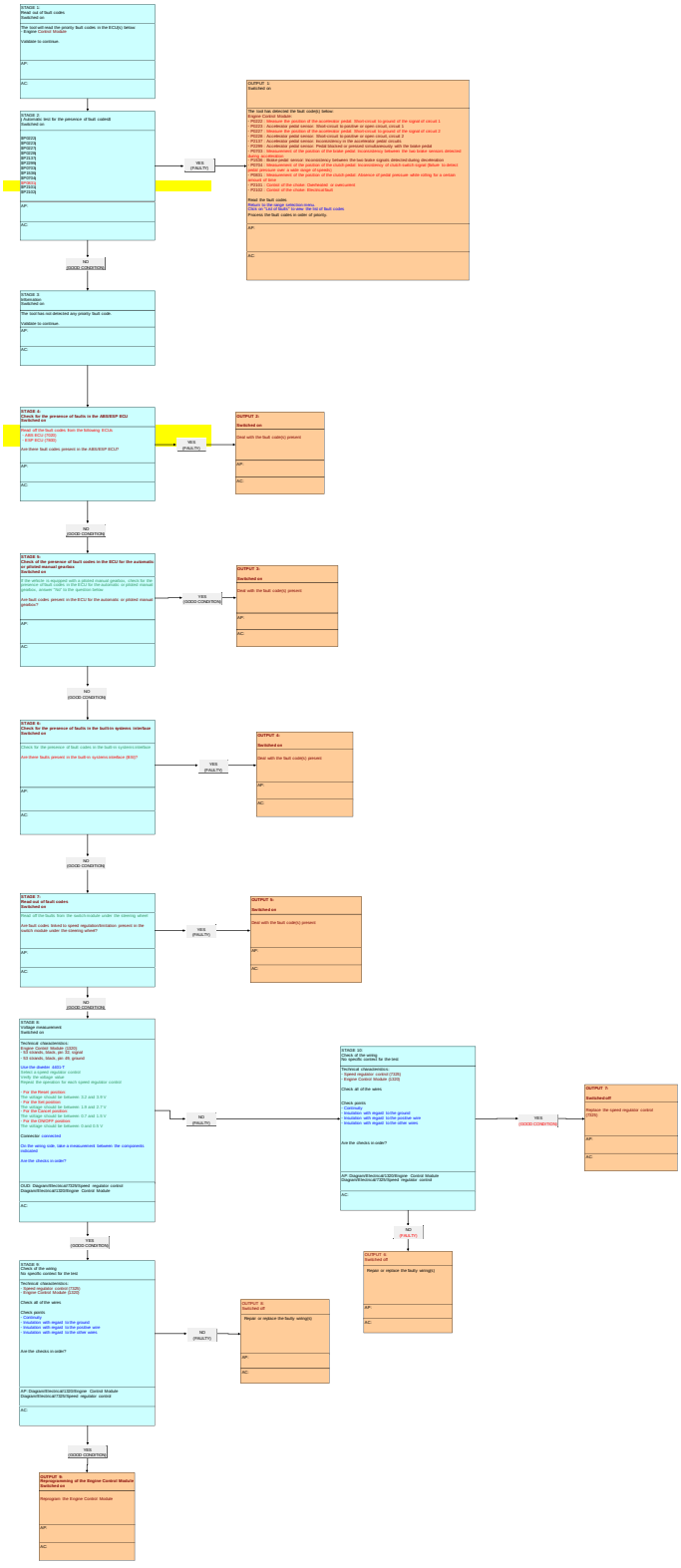

INFORMATION : FAULT CODE P0606 (ENGINE ECU)

SPECIAL FEATURE :

FOR : 1PMJ - B0FBM : DV6C TURBO DIESEL

FOR : 1CMJ - B0FBM : DV6C TURBO DIESEL

FOR : 1CB7 - B0FBM : DV6C TURBO DIESEL

FOR : 1CX7 - B0FBM : DV6C TURBO DIESEL

FOR : 1C58 - B0FBM : DV6C TURBO DIESEL

FOR : 1PT7 - B0FBM : DV6C TURBO DIESEL

FOR : 1PW2 - B0FBM : DV6C TURBO DIESEL

FOR : 1CB8 - B0FBM : DV6C TURBO DIESEL

FOR : 1CXA - B0FBM : DV6C TURBO DIESEL

FOR : 1CYA - B0FBM : DV6C TURBO DIESEL

FOR : 1PTB - B0FBM : DV6C TURBO DIESEL

FOR : 1PTC - B0FBM : DV6C TURBO DIESEL

FOR : 1PIA - B0FBM : DV6C TURBO DIESEL

Engine ECU CONTINENTAL SID 807 branch 2	
Fault code	P0606
After sales description of the fault code	Computer : Fault internal to "Watchdog" (CMM)
Description of the diagnostics	Fault inside the engine ECU detected
Conditions of activation of the diagnostics	Sleeping of networks (During the engine ECU sleep phase)
Conditions of disappearance of the fault	Driving for 5 minutes
Down-grade modes if fault present	-
Switching on of the warning lamp and/or warning message	-

Main customer complaints likely	Jerking/stalling
	Lack of power
	Starting problem
Suspect areas	Engine ECU

Fault code(s): P0606 or P0667 or P0668 or P0669 or P1621 or P1631

Reminder DTC

Do not fill in this section for the FLOW CHART phase

DTC no.	Alternates text of the DTC	Multi type	Conditions for fault finding	Downgraded mode after a fault is ascertained	Lamp to be illuminated	Suspected areas Major control steps	The client effect(s)/symptom(s) associated with the DTC(s)	Fault code(s) to be dealt with before working through this flow chart	Tools required
P0606	ECU: "Watchdog" internal fault (Engine Control Module)	no							
P0667	ECU:internal temperature sensor: Voltage variation outside tolerance	no							
P0668	ECU:internal temperature sensor: Temperature too high	no							
P0669	ECU:internal temperature sensor: Temperature too low	no							
P1621	ECU: Software redundancy fault at injection level: (Level 2)	no							
P1631	ECU: Internal fault (injection with raised fuel)	no							

PRE-CHECK

FLOW CHART Test procedure

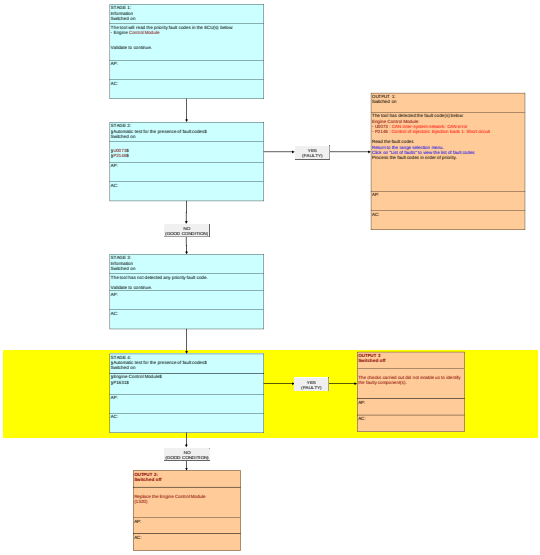

INFORMATION : FAULT CODE P0615 (ENGINE ECU)

SPECIAL FEATURE :

FOR : 1CMJ - B0FBM : DV6C TURBO DIESEL

FOR : 1PMJ - B0FBM : DV6C TURBO DIESEL

Engine ECU CONTINENTAL SID 807 branch 2	
Fault code	P0615
After sales description of the fault code	Starter : Temperature excessive or open circuit on the relay
Description of the diagnostics	Possibility 1 Excessive temperature of the starter motor power relay (For 4 s)
	Possibility 2 Electrical fault detected for 4 s
Conditions of activation of the diagnostics	At least one of the following conditions must be fulfilled - Ignition on - With the engine running
Conditions of disappearance of the fault	At least one of the following conditions must be fulfilled - Ignition on - With the engine running
Down-grade modes if fault present	-
Switching on of the warning lamp and/or warning message	"SERVICE" warning lamp
Main customer complaints likely	Starting problem
Suspect areas	Starter

Fault code(s): P0615

Reminder DTC

Do not fill in this section for the FLOW CHART phase

DTC no.	Aftercales text of the DTC	Fault type	Conditions for fault finding	Downgraded mode after a fault is ascertained	Driver warning lamp	Suspected areas Major control steps	The client eTech2(Symptom(s) associated with the DTCs	Fault code(s) to be dealt with before working through this flow chart	Tools required
P0615	Starter: Excessive temperature or relay open circuit	00							

PRE-CHECK
FLOW CHART Test procedure

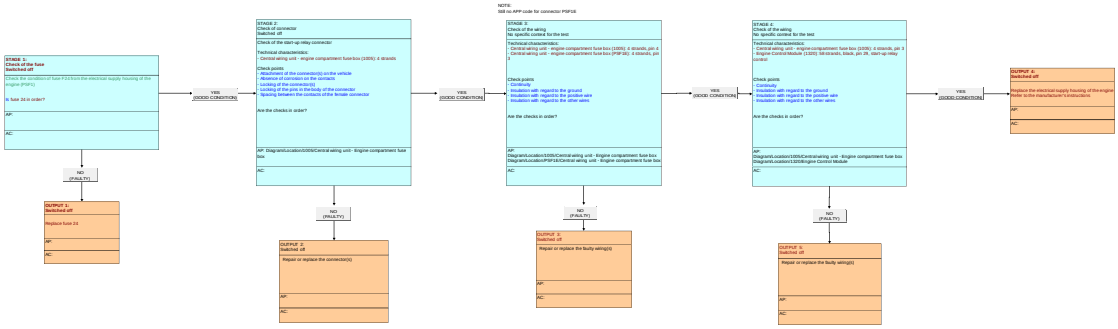

INFORMATION : FAULT CODE P0620 (ENGINE MANAGEMENT ECU)

SPECIAL FEATURE :

FOR : 1PMJ - B0FBM : DV6C TURBO DIESEL

FOR : 1CMJ - B0FBM : DV6C TURBO DIESEL

FOR : 1CB7 - B0FBM : DV6C TURBO DIESEL

FOR : 1CX7 - B0FBM : DV6C TURBO DIESEL

FOR : 1C58 - B0FBM : DV6C TURBO DIESEL

FOR : 1PT7 - B0FBM : DV6C TURBO DIESEL

FOR : 1PW2 - B0FBM : DV6C TURBO DIESEL

FOR : 1CXA - B0FBM : DV6C TURBO DIESEL

FOR : 1CYA - B0FBM : DV6C TURBO DIESEL

FOR : 1CB8 - B0FBM : DV6C TURBO DIESEL

FOR : 1CXA - B0FBM : DV6C TURBO DIESEL

FOR : 1CYA - B0FBM : DV6C TURBO DIESEL

FOR : 1PTB - B0FBM : DV6C TURBO DIESEL

FOR : 1PTC - B0FBM : DV6C TURBO DIESEL

FOR : 1PIA - B0FBM : DV6C TURBO DIESEL

Engine ECU CONTINENTAL SID 807 branch 2	
Fault code	P0620
After sales description of the fault code	Alternator : Alternator electrical fault
Description of the diagnostics	Alternator electrical fault detected (For 500 ms)
Conditions of activation of the diagnostics	engine running
Conditions of disappearance of the fault	Driving for 5 minutes
Down-grade modes if fault present	-

Switching on of the warning lamp and/or warning message	-
Main customer complaints likely	Starting problem
	A message is displayed on the multifunction screen
	Jerking/stalling
	Lighting of battery warning lamp
Suspect areas	Alternator
	Surroundings of the alternator

Fault code(s): P0620 or P065A or P0A1A or P0A3B or U1400 or U1401

Reminder DTC

Do not fill in this section for the FLOW CHART phase

DTC no.	Alternates text of the DTC	Walk type	Conditions for fault finding	Downgraded mode after a fault is ascertained	Fault warning lamp on	Suspected areas Major control steps	The client effect(s)/symptom(s) associated with the DTC(s)	Fault code(s) to be dealt with before working through this flow chart	Tools required
P0620	Alternator: Electrical fault	no							
P065A	Alternator: Mechanical fault	no							
P0A1A	Alternator: Alternator communication fault	no							
P0A3B	Alternator: Temperature fault	no							
U1400	Alternator: LIN network: Recount of a fault in the LIN network								
U1401	Alternator: LIN network: Recount of a fault in a slave node of the alternator LIN network								

PRE-CHECK
FLOW CHART Test procedure

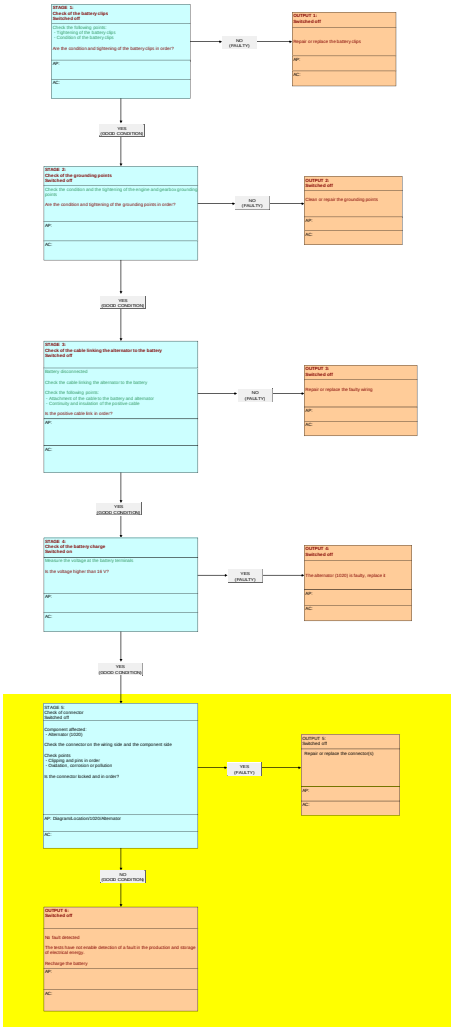

INFORMATION : FAULT CODE P0625 (ENGINE ECU)

Engine ECU CONTINENTAL SID 807 branch 2	
Fault code	P0625
After sales description of the fault code	Alternator : Alternator low voltage fault
Description of the diagnostics	The voltage difference between the ancillaries battery and the alternator is greater than 1,25 V for 2 s
Conditions of activation of the diagnostics	At least one of the following conditions must be fulfilled - Ignition on - With the engine running
Conditions of disappearance of the fault	At least one of the following conditions must be fulfilled - Ignition on - Engine running for 2 s
Down-grade modes if fault present	Activation of maximum load shedding via the onboard network to maintain battery capacity
	Deactivation of the "Stop and Start" function
Switching on of the warning lamp and/or warning message	-
Main customer complaints likely	Jerking/stalling
	Malfunctioning of the idle
	Lack of power
	Starting problem
Suspect areas	Alternator

Fault code(s): P0625

Reminder DTC

Do not fill in this section for the FLOW CHART phase

DTC no.	Alternates text of the DTC	Fault type	Conditions for fault finding	Downgraded mode after a fault is ascertained	Warning lamp (if present)	Suspected areas Major control steps	The client effect(Symptom(s)) associated with the DTC(s)	Fault code(s) to be dealt with before working through this flow chart	Tools required
P0625	Alternator: Fault with alternator low voltage	0							

PRE-CHECK

FLOW CHART Test procedure

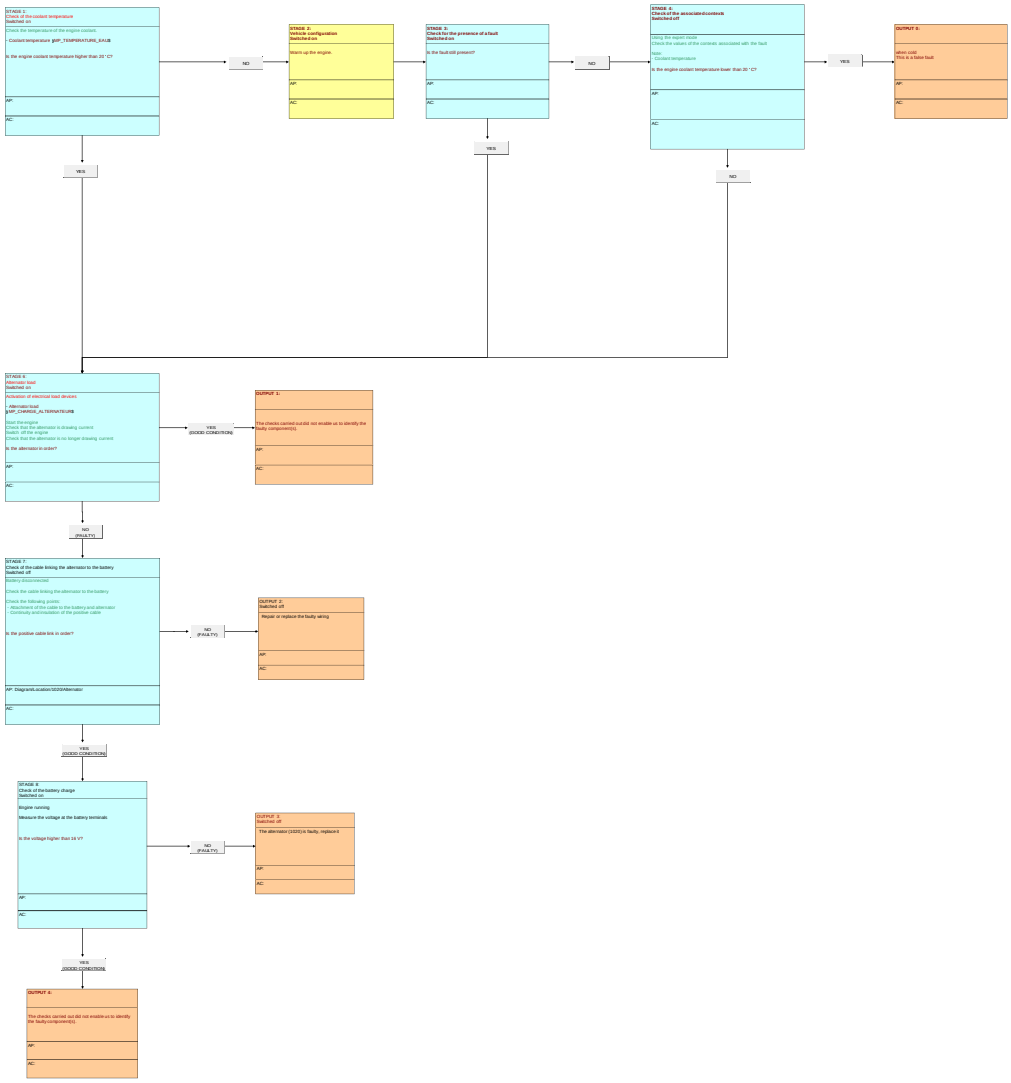

INFORMATION : FAULT CODE P0626 (ENGINE ECU)

Engine ECU CONTINENTAL SID 807 branch 2	
Fault code	P0626
After sales description of the fault code	Alternator : Alternator high voltage fault
Description of the diagnostics	The voltage difference between the ancillaries battery and the alternator is greater than 0,75 V for 2 s
Conditions of activation of the diagnostics	At least one of the following conditions must be fulfilled - Ignition on - With the engine running
Conditions of disappearance of the fault	At least one of the following conditions must be fulfilled - Ignition on - Engine running for 2 s
Down-grade modes if fault present	Activation of maximum load shedding via the onboard network to maintain battery capacity
	Deactivation of the "Stop and Start" function
Switching on of the warning lamp and/or warning message	-
Main customer complaints likely	Jerking/stalling
	Malfunctioning of the idle
	Lack of power
	Starting problem
Suspect areas	Alternator

Fault code(s): P0626

Reminder DTC

Do not fill in this section for the FLOW CHART phase

DTC no.	Aftersales text of the DTC	Fault type	Conditions for fault finding	Downgraded mode after a fault is ascertained	Illumination of warning lamps	Suspected areas Major control steps	The client effect(s)/symptom(s) associated with the DTCs	Fault code(s) to be dealt with before working through this flow chart	Tools required
P0626	Alternator: Fault with alternator high voltage								

PRE-CHECK

FLOW CHART Test procedure

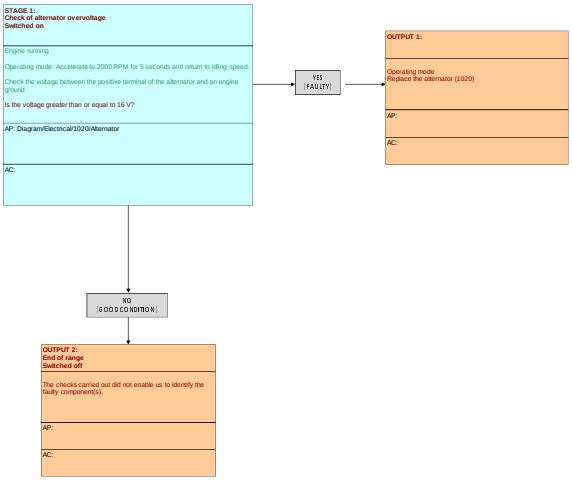

INFORMATION : FAULT CODE P062B (ENGINE MANAGEMENT ECU)

SPECIAL FEATURE :

FOR : 1PMJ - B0FBM : DV6C TURBO DIESEL

FOR : 1CMJ - B0FBM : DV6C TURBO DIESEL

FOR : 1CB7 - B0FBM : DV6C TURBO DIESEL

FOR : 1CX7 - B0FBM : DV6C TURBO DIESEL

FOR : 1C58 - B0FBM : DV6C TURBO DIESEL

FOR : 1PT7 - B0FBM : DV6C TURBO DIESEL

FOR : 1PW2 - B0FBM : DV6C TURBO DIESEL

FOR : 1CB8 - B0FBM : DV6C TURBO DIESEL

FOR : 1CXA - B0FBM : DV6C TURBO DIESEL

FOR : 1CYA - B0FBM : DV6C TURBO DIESEL

FOR : 1PTB - B0FBM : DV6C TURBO DIESEL

FOR : 1PTC - B0FBM : DV6C TURBO DIESEL

FOR : 1PIA - B0FBM : DV6C TURBO DIESEL

Engine ECU CONTINENTAL SID 807 branch 2	
Fault code	P062B
After sales description of the fault code	Downloading / Configuration : Downloading of the resetting of the injectors not carried out
Description of the diagnostics	Downloading or configuration of the resetting of the injectors fault
Conditions of activation of the diagnostics	-
Conditions of disappearance of the fault	-
Down-grade modes if fault present	-
Switching on of the warning lamp and/or warning message	Flashing of warning lamp MIL

Main customer complaints likely	Jerking/stalling
	Engine acceleration at wrong time
	Noise
	Slightly higher fuel consumption
	Starting problem
	Smoke from the exhaust
	Lack of power
Suspect areas	Fuel injectors
	Engine management ECU
	Injector classification

Fault code(s): P1613 or P160A or P062B

Reminder DTC

Do not fill in this section for the FLOW CHART phase

DTC no.	Aftersales text of the DTC	Fault type	Conditions for fault finding	Downgraded mode after a fault is ascertained	Does it all turn on a warning light	Suspected areas Major control steps	The client effect(s)/symptom(s) associated with the DTCs	Fault code(s) to be dealt with before working through this flow chart	Tools required
P1613	Reprogramming/Telecoding: Telecoding fault in the ECU configuration (use P0610)	EE							
P160A	Reprogramming / Telecoding: Telecoding fault in approval number	EE							
P062B	Reprogramming / Telecoding: Telecoding for the injector reset not carried out	EE			SERVICE				

PRE-CHECK

FLOW CHART Test procedure

STAGE 1:
Intervention

Is fault code is linked to telecoding that has not been carried out

If fault P1613 is present
Carry out the telecoding of the configuration for the Engine Control Module

If fault P160A is present
Carry out the telecoding of the approval number

If fault P062B is present
Carry out the telecoding of the class of injectors

AP:

AC:

INFORMATION : FAULT CODE P062D (ENGINE MANAGEMENT ECU)

SPECIAL FEATURE :

FOR : 1PMJ - B0FBM : DV6C TURBO DIESEL

FOR : 1CMJ - B0FBM : DV6C TURBO DIESEL

FOR : 1CB7 - B0FBM : DV6C TURBO DIESEL

FOR : 1CX7 - B0FBM : DV6C TURBO DIESEL

FOR : 1C58 - B0FBM : DV6C TURBO DIESEL

FOR : 1PT7 - B0FBM : DV6C TURBO DIESEL

FOR : 1PW2 - B0FBM : DV6C TURBO DIESEL

FOR : 1CB8 - B0FBM : DV6C TURBO DIESEL

FOR : 1CXA - B0FBM : DV6C TURBO DIESEL

FOR : 1CYA - B0FBM : DV6C TURBO DIESEL

FOR : 1PTB - B0FBM : DV6C TURBO DIESEL

FOR : 1PTC - B0FBM : DV6C TURBO DIESEL

FOR : 1PIA - B0FBM : DV6C TURBO DIESEL

Engine ECU CONTINENTAL SID 807 branch 2	
Fault code	P062D
After sales description of the fault code	Injectors control : Injection bank supply voltage outside tolerance
Description of the diagnostics	Voltage lower than 150 V or higher than 300 V for 1000 ms
Conditions of activation of the diagnostics	Sleeping of networks (During the engine ECU sleep phase)
Conditions of disappearance of the fault	Driving for 5 minutes
Down-grade modes if fault present	-
Switching on of the warning lamp and/or warning message	Warning lamp MIL
	Jerking/stalling

Main customer complaints likely	Noise
	Smoke from the exhaust
	Starting problem
	Lack of power
	Absence of automatic stopping of the internal combustion engine (If the vehicle has the Stop and Start system)
Suspect areas	Fuel injectors
	Engine ECU
	Electrical harnesses
	Connectors

Fault code(s): P0201 or P0202 or P0203 or P0204 or P0262 or P0265 or P0268 or P0271 or P062D or P1641 or P2146 or P2148

Reminder DTC

Do not fill in this section for the FLOW CHART phase

DTC no.	Alternative text of the DTC	Priority	Conditions for fault finding	Downgraded mode after a fault is ascertained	Operating safety (Operating safety)	Suspected areas Major control steps	The client effects(symptomatic) associated with the DTCs	Fault code(s) to be dealt with before working through this flow chart	Tools required
P0201	Control of injector 1: Open circuit on the circuit (wiring, injector, ECU)	A							
P0202	Control of injector 2: Open circuit on the circuit (wiring, injector, ECU)	A							
P0203	Control of injector 3: Open circuit on the circuit (wiring, injector, ECU)	A							
P0204	Control of injector 4: Open circuit on the circuit (wiring, injector, ECU)	A							
P0262	Control of injector 1: Short-circuit to positive on the circuit (wiring, injector, ECU)	A							
P0265	Control of injector 2: Short-circuit to positive on the circuit (wiring, injector, ECU)	A							
P0268	Control of injector 3: Short-circuit to positive on the circuit (wiring, injector, ECU)	A							
P0271	Control of injector 4: Short-circuit to positive on the circuit (wiring, injector, ECU)	A							
P062D	ECU voltage converter for control of the injectors faulty on bank 1	A							
P1641	ECU initialisation malfunction of the injector bank or wiring fault	A							
P2146	Injector control: injection bank 1: short-circuit	A							
P2148	Injector control: injection bank 1: voltage too high	A							

PRE-CHECK

FLOW CHART Test procedure

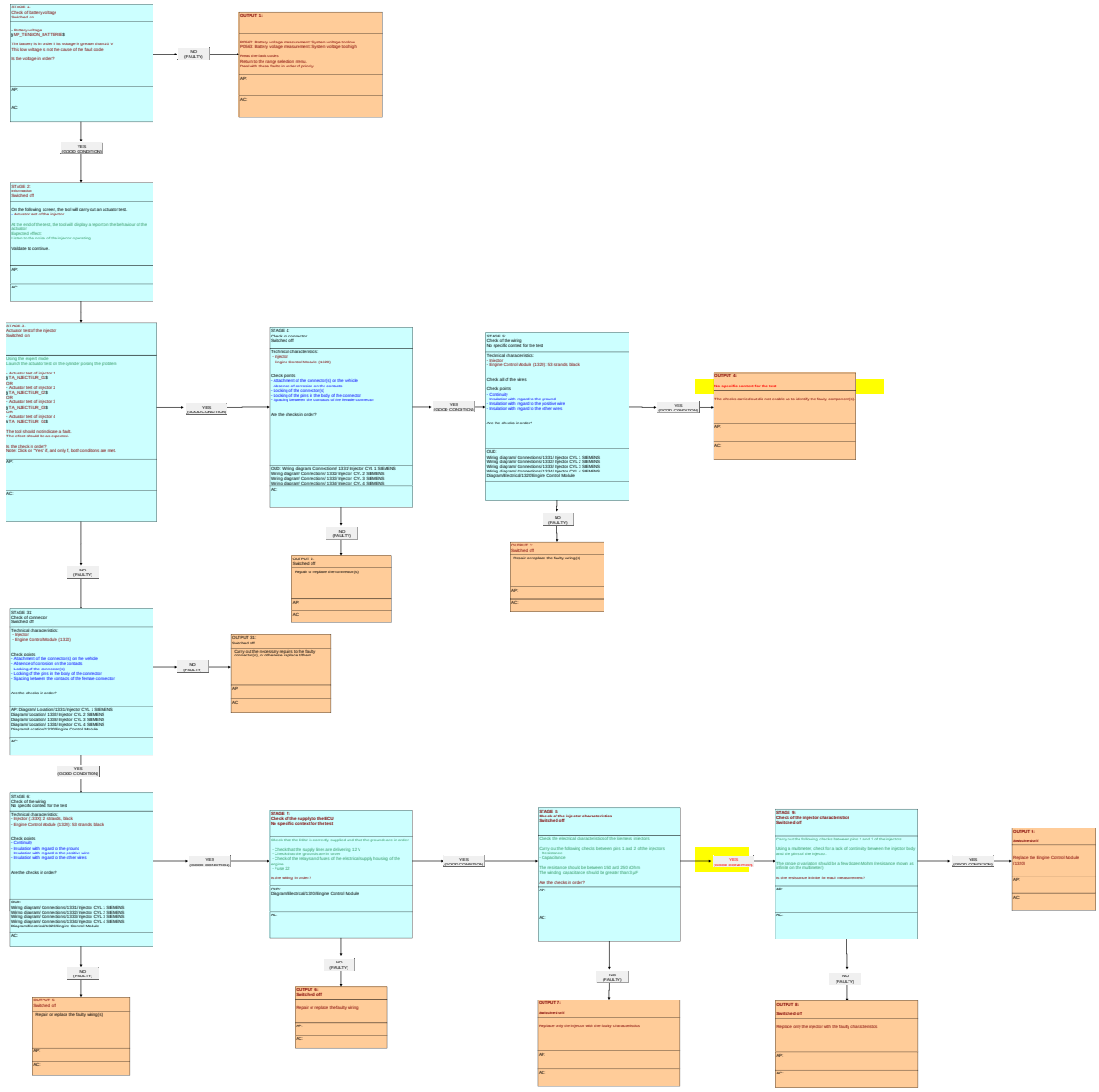

INFORMATION : FAULT CODE P0630 (ENGINE ECU)

SPECIAL FEATURE :

FOR : 1CMJ - B0FBM : DV6C TURBO DIESEL

FOR : 1PMJ - B0FBM : DV6C TURBO DIESEL

Engine ECU CONTINENTAL SID807 branch 2	
Fault code	P0630
After sales description of the fault code	Downloading / Configuration : VIN numbering fault
Description of the diagnostics	VIN not programmed
Conditions of activation of the diagnostics	-
Conditions of disappearance of the fault	-
Down-grade modes if fault present	-
Switching on of the warning lamp and/or warning message	Flashing of warning lamp MIL
Main customer complaints likely	Jerking/stalling
	Starting problem
Suspect areas	Engine ECU

Fault code(s): P0630

Reminder DTC

Do not fill in this section for the FLOW CHART phase

DTC no.	Aftersales text of the DTC	Fault type	Conditions for fault finding	Downgraded mode after a fault is ascertained	Illumination of warning	Suspected areas Major control steps	The client effect(s)/symptom(s) associated with the DTCs	Fault code(s) to be dealt with before working through this flow chart	Tools required
P0630	Reprogramming/Telecoding: Fault with VIN number	EE							
					SERVICE				

PRE-CHECK

FLOW CHART Test procedure

STAGE 1:
Intervention
Switched on

Is fault code is linked to telecoding that has not been carried out

Carry out the telecoding of the VIN number

AP:

AC:

INFORMATION : FAULT CODE P0645 (ENGINE ECU)

SPECIAL FEATURE :

FOR : 1CMJ - B0FBM : DV6C TURBO DIESEL

FOR : 1PMJ - B0FBM : DV6C TURBO DIESEL

Engine ECU CONTINENTAL SID 807 branch 2	
Fault code	P0645
After sales description of the fault code	Air conditioning compressor engagement actuator : Open circuit
Description of the diagnostics	Electrical fault detected for 4 s
Conditions of activation of the diagnostics	At least one of the following conditions must be fulfilled - Ignition on - With the engine running
Conditions of disappearance of the fault	At least one of the following conditions must be fulfilled - Ignition on - With the engine running
Down-grade modes if fault present	Request for immediate declutching of the air conditioning compressor
Switching on of the warning lamp and/or warning message	-
Main customer complaints likely	Air conditioning cut-off
Suspect areas	Air conditioning compressor

Fault code(s): P0645 or P0646 or P0647

Reminder DTC

Do not fit all this section for the FLOW CHART phase

DTC no.	Alternates text of the DTC	Fail type	Conditions for fault finding	Downgraded mode after a fault is ascertained	Level of urgency of the fault	Suspected areas Major control steps	The client effect(S)/symptom(s) associated with the DTCs	Fault code(s) to be dealt with before working through this flow chart	Tools required
P0645	A/C compressor engagement actuator: Open circuit	no							
P0646	A/C compressor engagement actuator: Voltage too low	no							
P0647	A/C compressor engagement actuator: Voltage too high	no							

PRE-CHECK

FLOW CHART Test procedure

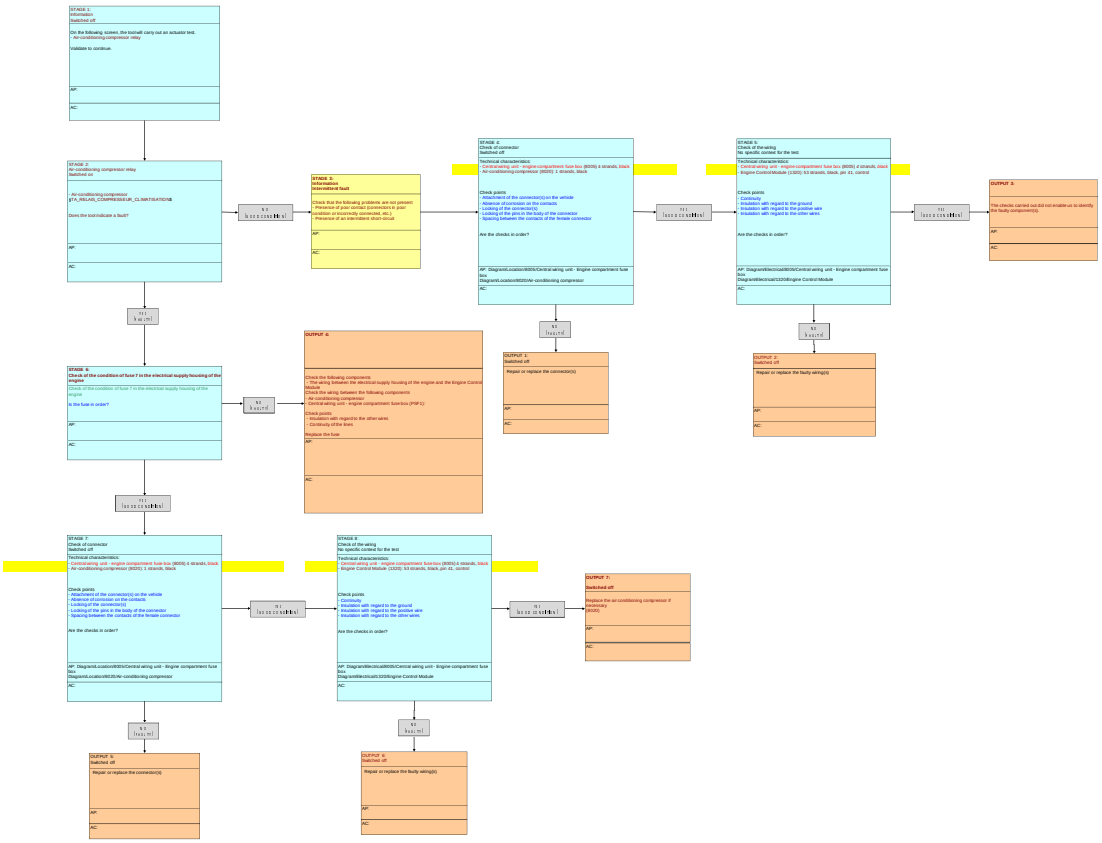

INFORMATION : FAULT CODE P0646 (ENGINE ECU)

SPECIAL FEATURE :

FOR : 1CMJ - B0FBM : DV6C TURBO DIESEL

FOR : 1PMJ - B0FBM : DV6C TURBO DIESEL

Engine ECU CONTINENTAL SID 807 branch 2	
Fault code	P0646
After sales description of the fault code	A/C compressor engagement actuator : Voltage too low
Description of the diagnostics	Electrical fault detected for 4 s
Conditions of activation of the diagnostics	At least one of the following conditions must be fulfilled - Ignition on - With the engine running
Conditions of disappearance of the fault	At least one of the following conditions must be fulfilled - Ignition on - With the engine running
Down-grade modes if fault present	Request for immediate declutching of the air conditioning compressor
Switching on of the warning lamp and/or warning message	-
Main customer complaints likely	Air conditioning cut-off
Suspect areas	Air conditioning compressor

Fault code(s): P0645 or P0646 or P0647

Reminder DTC

Do not fill in this section for the FLOW CHART phase

DTC no.	Alternates text of the DTC	Fail type	Conditions for fault finding	Downgraded mode after a fault is ascertained	Driver safety alert	Suspected areas Major control steps	The client effect(S)/symptom(s) associated with the DTCs	Fault code(s) to be dealt with before working through this flow chart	Tools required
P0645	A/C compressor engagement actuator: Open circuit	no							
P0646	A/C compressor engagement actuator: Voltage too low	no							
P0647	A/C compressor engagement actuator: Voltage too high	no							

PRE-CHECK

FLOW CHART Test procedure

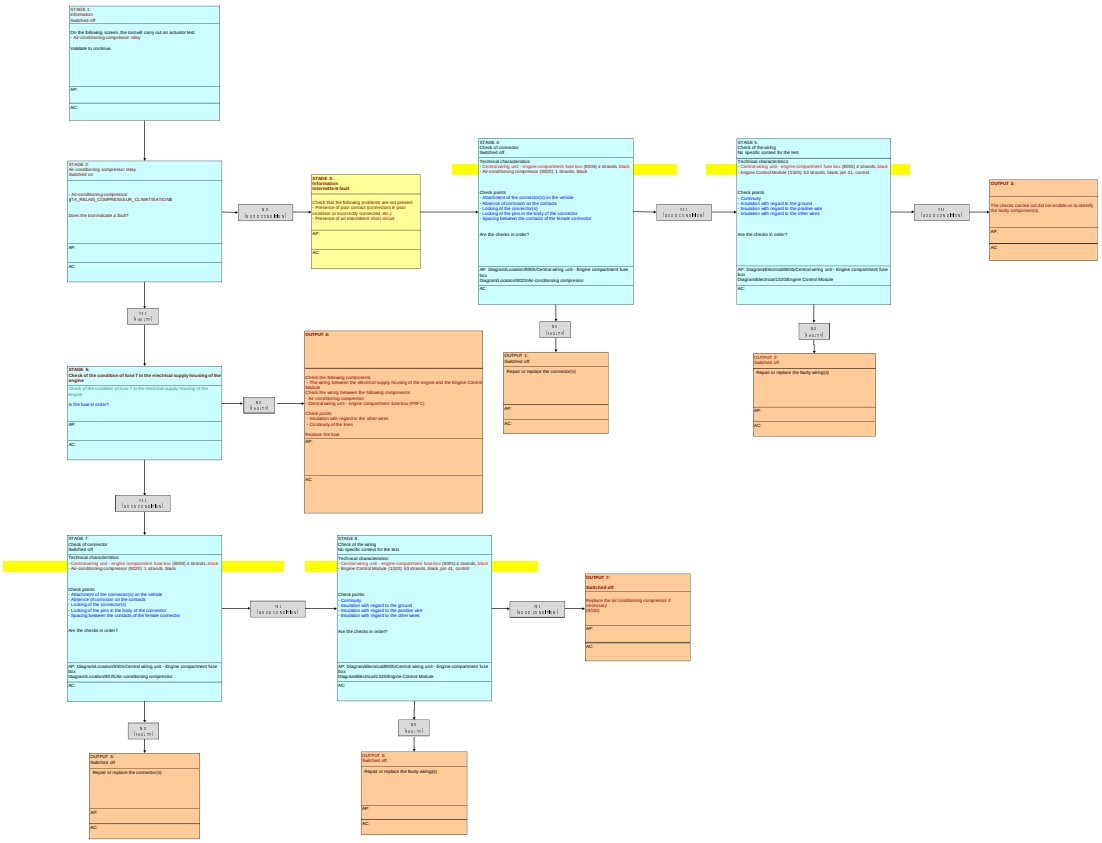

INFORMATION : FAULT CODE P0647 (ENGINE ECU)

SPECIAL FEATURE :

FOR : 1PMJ - B0FBM : DV6C TURBO DIESEL

FOR : 1CMJ - B0FBM : DV6C TURBO DIESEL

Engine ECU CONTINENTAL SID 807 branch 2	
Fault code	P0647
After sales description of the fault code	A/C compressor engagement actuator : Voltage too high
Description of the diagnostics	Electrical fault detected for 4 s
Conditions of activation of the diagnostics	At least one of the following conditions must be fulfilled - Ignition on - With the engine running
Conditions of disappearance of the fault	At least one of the following conditions must be fulfilled - Ignition on - With the engine running
Down-grade modes if fault present	Request for immediate declutching of the air conditioning compressor
Switching on of the warning lamp and/or warning message	-
Main customer complaints likely	Air conditioning cut-off
Suspect areas	Air conditioning compressor

Fault code(s): P0645 or P0646 or P0647

Reminder DTC

Do not fill in this section for the FLOW CHART phase

DTC no.	Alternates text of the DTC	Fail type	Conditions for fault finding	Downgraded mode after a fault is ascertained	Driver safety alert lamp	Suspected areas Major control steps	The client effect(S)/symptom(s) associated with the DTCs	Fault code(s) to be dealt with before working through this flow chart	Tools required
P0645	A/C compressor engagement actuator: Open circuit	no							
P0646	A/C compressor engagement actuator: Voltage too low	no							
P0647	A/C compressor engagement actuator: Voltage too high	no							

PRE-CHECK

FLOW CHART Test procedure

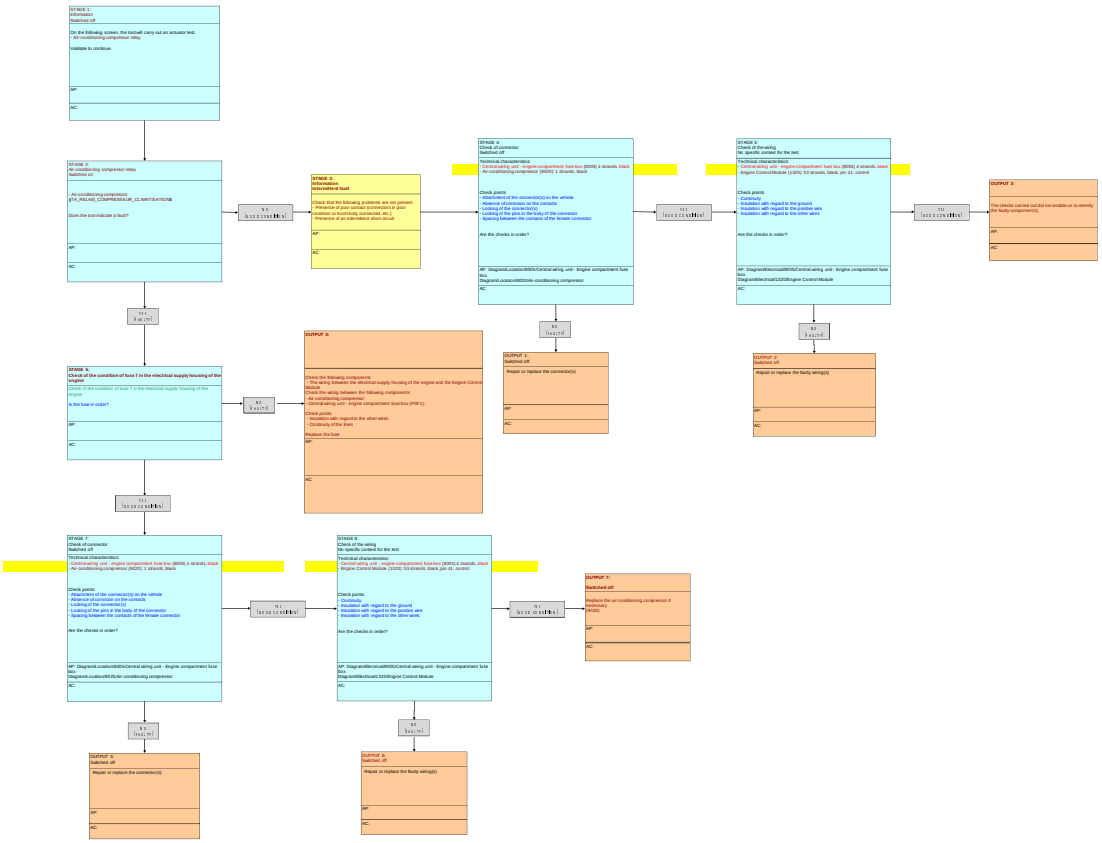

INFORMATION : FAULT CODE P0658 (ENGINE MANAGEMENT ECU)

SPECIAL FEATURE :

FOR : 1CB7 - B0FBM : DV6C TURBO DIESEL

FOR : 1CX7 - B0FBM : DV6C TURBO DIESEL

FOR : 1C58 - B0FBM : DV6C TURBO DIESEL

FOR : 1PT7 - B0FBM : DV6C TURBO DIESEL

FOR : 1PW2 - B0FBM : DV6C TURBO DIESEL

FOR : 1CB8 - B0FBM : DV6C TURBO DIESEL

FOR : 1CXA - B0FBM : DV6C TURBO DIESEL

FOR : 1CYA - B0FBM : DV6C TURBO DIESEL

FOR : 1PTB - B0FBM : DV6C TURBO DIESEL

FOR : 1PTC - B0FBM : DV6C TURBO DIESEL

FOR : 1PIA - B0FBM : DV6C TURBO DIESEL

FOR : 1CMJ - B0FBM : DV6C TURBO DIESEL

FOR : 1PMJ - B0FBM : DV6C TURBO DIESEL

Engine ECU CONTINENTAL SID 807 branch 2	
Fault code	P0658
After sales description of the fault code	5V sensor supply no. 1 (Air conditioning pressure sensor - Rail pressure sensor - EGR valve position sensor - Variable geometry turbo position sensor - Air mixer position sensor - Supercharging pressure sensor; Particle filter differential pressure sensor - EGR exchanger bypass position sensor) : Voltage too low
Description of the diagnostics	Voltage less than 4,8 V for 100 ms
Conditions of activation of the diagnostics	engine running
Conditions of disappearance of the fault	Driving for 5 minutes
	Closing of the EGR (exhaust gas recycling) valve
	Irreversible deactivation of the vehicle speed limiter
	Irreversible deactivation of the vehicle cruise control

Down-grade modes if fault present	Request for immediate declutching of the air conditioning compressor
	Switching of the turbocharging pressure regulation to controlled mode
	Maximum opening of the turbocharger geometry
	Switching to fuel "normal reduced flow" mode
	Sending of the information "torque uncertain" on the CAN network
Switching on of the warning lamp and/or warning message	Warning lamp MIL
	"SERVICE" warning lamp
Main customer complaints likely	Starting problem
	Jerking/stalling
	Lack of power
	Noise
Suspect areas	Engine ECU
	Air conditioning pressure sensor
	Turbocharger variable geometry position repeat sensor
	Exhaust gas recycling valve
	Air mixer
	Pressure sensor on the fuel high-pressure injection rail
	Manifold air entry pressure sensor
	Particle filter differential pressure sensor
	Position switch for the EGR exchanger by-pass
	Electrical harnesses
	Connectors

Fault code(s): P0658 or P0659

Reminder DTC

Do not fill in this section for the FLOW CHART phase

DTC no.	Alternates text of the DTC	Fault type	Conditions for fault finding	Downgraded mode after a fault is ascertained	Type of stored fault	Suspected zones Major control steps	The client effects(Symptom(s)) associated with the DTCs	Fault code(s) to be dealt with before working through this flow chart	Tools required
P0658	5 V sensor supply no. 1: Voltage too low	00							
P0659	5 V sensor supply no. 1: Voltage too high	00							

PRE-CHECK

FLOW CHART Test procedure

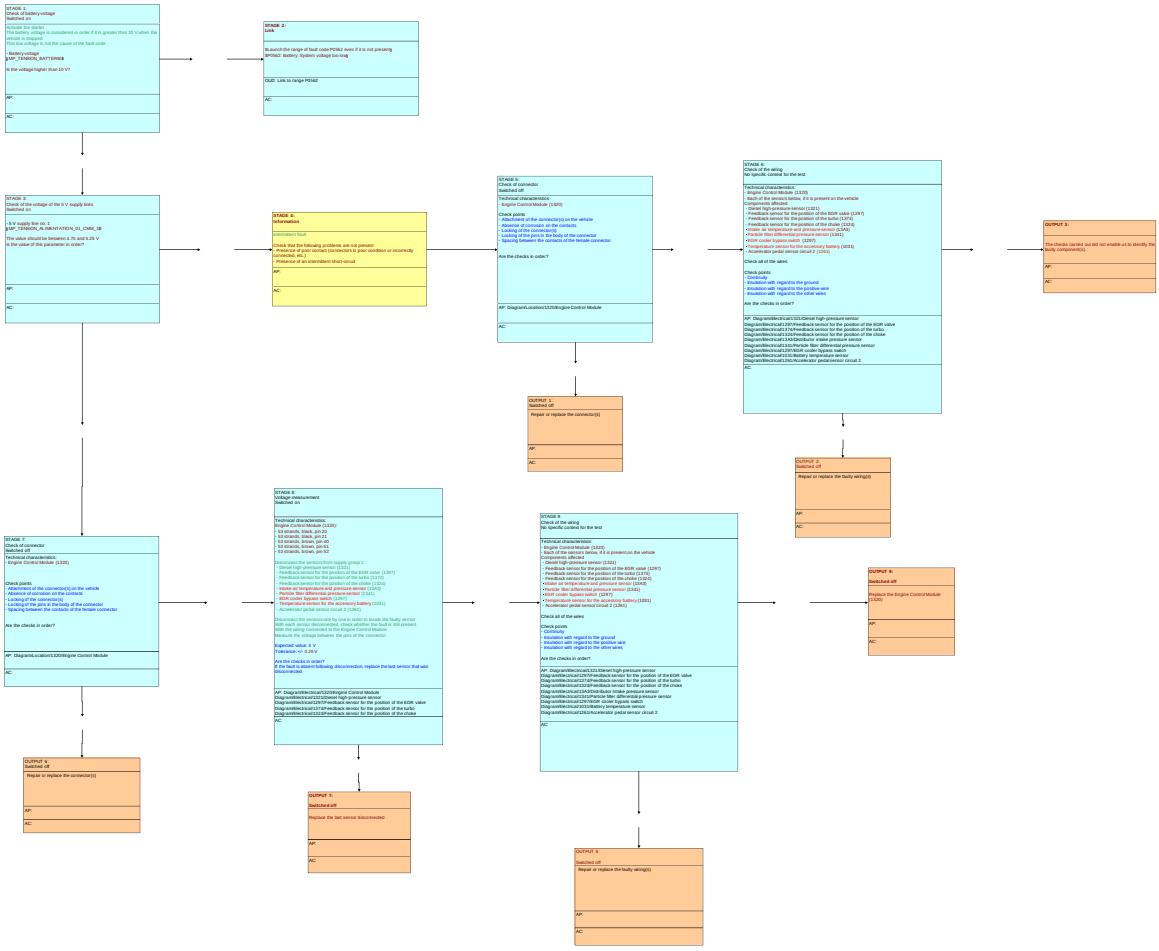

INFORMATION : FAULT CODE P0659 (ENGINE MANAGEMENT ECU)

SPECIAL FEATURE :

FOR : 1CB7 - B0FBM : DV6C TURBO DIESEL

FOR : 1CX7 - B0FBM : DV6C TURBO DIESEL

FOR : 1C58 - B0FBM : DV6C TURBO DIESEL

FOR : 1PT7 - B0FBM : DV6C TURBO DIESEL

FOR : 1PW2 - B0FBM : DV6C TURBO DIESEL

FOR : 1CB8 - B0FBM : DV6C TURBO DIESEL

FOR : 1CXA - B0FBM : DV6C TURBO DIESEL

FOR : 1CYA - B0FBM : DV6C TURBO DIESEL

FOR : 1PTB - B0FBM : DV6C TURBO DIESEL

FOR : 1PTC - B0FBM : DV6C TURBO DIESEL

FOR : 1PIA - B0FBM : DV6C TURBO DIESEL

FOR : 1PMJ - B0FBM : DV6C TURBO DIESEL

FOR : 1CMJ - B0FBM : DV6C TURBO DIESEL

Engine ECU CONTINENTAL SID 807 branch 2	
Fault code	P0659
After sales description of the fault code	5V sensor supply no. 1 (Air conditioning pressure sensor ; Rail pressure sensor ; EGR valve position sensor ; Variable geometry turbo position sensor ; Air mixer position sensor ; Turbocharging pressure sensor ; Particle filter differential pressure sensor ; EGR exchanger bypass position sensor) : Voltage too high
Description of the diagnostics	Voltage higher than 5,3 V for 100 ms
Conditions of activation of the diagnostics	engine running
Conditions of disappearance of the fault	Driving for 5 minutes
	Closing of the EGR (exhaust gas recycling) valve
	Irreversible deactivation of the vehicle speed limiter
	Irreversible deactivation of the vehicle cruise control

Down-grade modes if fault present	Air conditioning
	Switching of the turbocharging pressure regulation to controlled mode
	Maximum opening of the turbocharger geometry
	Switching to fuel "normal reduced flow" mode
	Sending of the information "torque uncertain" on the CAN network
Switching on of the warning lamp and/or warning message	Warning lamp MIL
	"SERVICE" warning lamp
Main customer complaints likely	Starting problem
	Jerking/stalling
	Lack of power
	Noise
Suspect areas	Engine ECU
	Air conditioning pressure sensor
	Turbocharger variable geometry position repeat sensor
	Exhaust gas recycling valve
	Air mixer
	Pressure sensor on the fuel high-pressure injection rail
	Manifold air entry pressure sensor
	Particle filter differential pressure sensor
	Position switch of the EGR exchanger bypass
	Electrical harnesses
	Connectors

Fault code(s): P0658 or P0659

Reminder DTC

Do not fill in this section for the FLOW CHART phase

DTC no.	Alternates text of the DTC	Fault type	Conditions for fault finding	Downgraded mode after a fault is ascertained	Type of action to be taken	Suspected zones Major control steps	The client effects(Symptom(s)) associated with the DTCs	Fault code(s) to be dealt with before working through this flow chart	Tools required
P0658	5 V sensor supply no. 1: Voltage too low	00							
P0659	5 V sensor supply no. 1: Voltage too high	00							

PRE-CHECK

FLOW CHART Test procedure

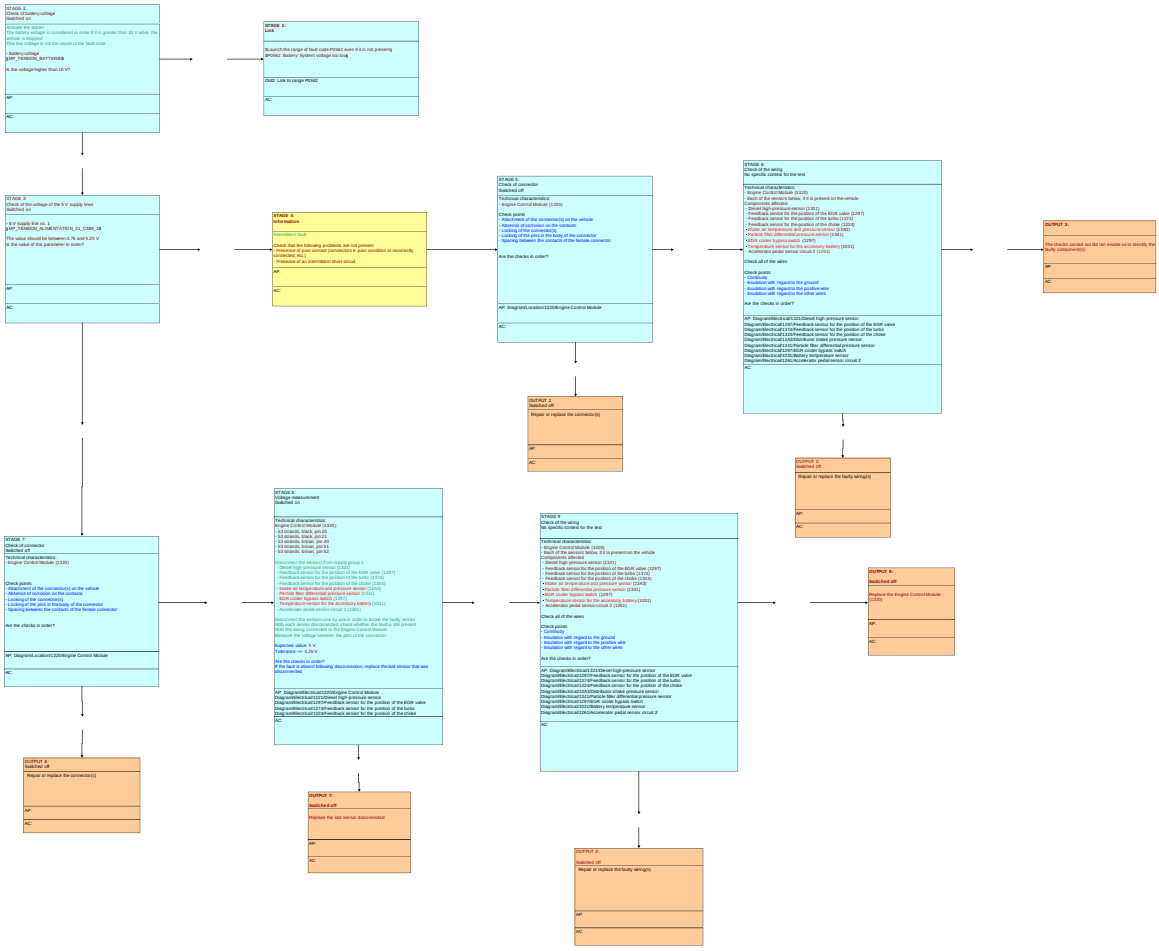

INFORMATION : FAULT CODE P065A (ENGINE MANAGEMENT ECU)

SPECIAL FEATURE :

FOR : 1CB7 - B0FBM : DV6C TURBO DIESEL

FOR : 1CX7 - B0FBM : DV6C TURBO DIESEL

FOR : 1C58 - B0FBM : DV6C TURBO DIESEL

FOR : 1PT7 - B0FBM : DV6C TURBO DIESEL

FOR : 1PW2 - B0FBM : DV6C TURBO DIESEL

FOR : 1CXA - B0FBM : DV6C TURBO DIESEL

FOR : 1CYA - B0FBM : DV6C TURBO DIESEL

FOR : 1CB8 - B0FBM : DV6C TURBO DIESEL

FOR : 1CXA - B0FBM : DV6C TURBO DIESEL

FOR : 1CYA - B0FBM : DV6C TURBO DIESEL

FOR : 1PTB - B0FBM : DV6C TURBO DIESEL

FOR : 1PTC - B0FBM : DV6C TURBO DIESEL

FOR : 1PIA - B0FBM : DV6C TURBO DIESEL

FOR : 1PMJ - B0FBM : DV6C TURBO DIESEL

FOR : 1CMJ - B0FBM : DV6C TURBO DIESEL

Engine ECU CONTINENTAL SID 807 branch 2	
Fault code	P065A
After sales description of the fault code	Alternator : Alternator mechanical fault
Description of the diagnostics	Alternator mechanical fault detected for 0,5 seconds
Conditions of activation of the diagnostics	Engine running
Conditions of disappearance of the fault	Driving for 5 minutes
Down-grade modes if fault present	-

Switching on of the warning lamp and/or warning message	-
Main customer complaints likely	Jerking/stalling
	Starting problem
	Lighting of battery warning lamp
Suspect areas	Alternator
	Ancillary drive belt
	Accessories plate (Roller / Pulley / Tensioner)

Fault code(s): P0620 or P065A or P0A1A or P0A3B or U1400 or U1401

Reminder DTC

Do not fill in this section for the FLOW CHART phase

DTC no.	Alternates text of the DTC	Walk type	Conditions for fault finding	Downgraded mode after a fault is ascertained	Fault warning light on	Suspected areas Major control steps	The client effect(s)/symptom(s) associated with the DTC(s)	Fault code(s) to be dealt with before working through this flow chart	Tools required
P0620	Alternator: Electrical fault	no							
P065A	Alternator: Mechanical fault	no							
P0A1A	Alternator: Alternator communication fault	no							
P0A3B	Alternator: Temperature fault	no							
U1400	Alternator: LIN network: Recovid of a fault in the LIN network								
U1401	Alternator: LIN network: Recovid of a fault in a slave node of the alternator LIN network								

PRE-CHECK
FLOW CHART Test procedure

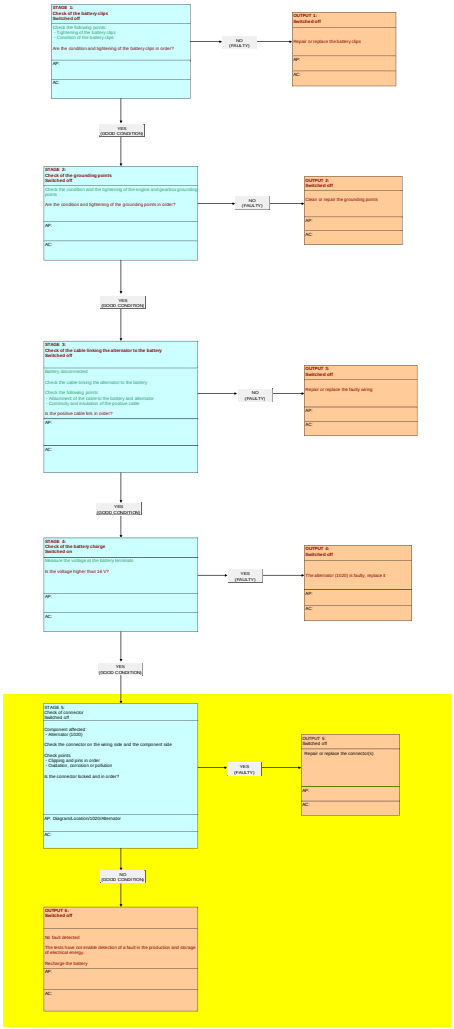

INFORMATION : FAULT CODE P0667 (ENGINE ECU)

SPECIAL FEATURE :

FOR : 1CB7 - B0FBM : DV6C TURBO DIESEL

FOR : 1CX7 - B0FBM : DV6C TURBO DIESEL

FOR : 1C58 - B0FBM : DV6C TURBO DIESEL

FOR : 1PT7 - B0FBM : DV6C TURBO DIESEL

FOR : 1PW2 - B0FBM : DV6C TURBO DIESEL

FOR : 1CB8 - B0FBM : DV6C TURBO DIESEL

FOR : 1CXA - B0FBM : DV6C TURBO DIESEL

FOR : 1CYA - B0FBM : DV6C TURBO DIESEL

FOR : 1PTB - B0FBM : DV6C TURBO DIESEL

FOR : 1PTC - B0FBM : DV6C TURBO DIESEL

FOR : 1PIA - B0FBM : DV6C TURBO DIESEL

FOR : 1PMJ - B0FBM : DV6C TURBO DIESEL

FOR : 1CMJ - B0FBM : DV6C TURBO DIESEL

Engine ECU CONTINENTAL SID 807 branch 2	
Fault code	P0667
After sales description of the fault code	ECU internal temperature measurement : Voltage variation outside the tolerance
Description of the diagnostics	Variation in the temperature more than 200°C per 100 ms
Conditions of activation of the diagnostics	At least one of the following conditions must be fulfilled - Ignition switched on - engine running
Conditions of disappearance of the fault	Driving for 5 minutes
Down-grade modes if fault present	-
Switching on of the warning lamp and/or	-

warning message	
Main customer complaints likely	Jerking/stalling
	Lack of power
	Starting problem
Suspect areas	Engine ECU

Fault code(s): P0606 or P0667 or P0668 or P0669 or P1621 or P1631

Reminder DTC

Do not do at this section for the FLOW CHART phase

DTC no.	Alternates text of the DTC	Fault type	Conditions for fault finding	Downgraded mode after a fault is ascertained	Lamp to be illuminated	Suspected areas Major control steps	The client effect(s)/symptom(s) associated with the DTC(s)	Fault code(s) to be dealt with before working through this flow chart	Tools required
P0606	ECU: "Watchdog" internal fault (Engine Control Module)	00							
P0667	ECU:internal temperature sensor: Voltage variation outside tolerance	00							
P0668	ECU:internal temperature sensor: Temperature too high	00							
P0669	ECU:internal temperature sensor: Temperature too low	00							
P1621	ECU: Software redundancy fault at injection level: (Level 2)	00							
P1631	ECU: Internal fault (injection with raised fuel)	00							

PRE-CHECK

FLOW CHART Test procedure

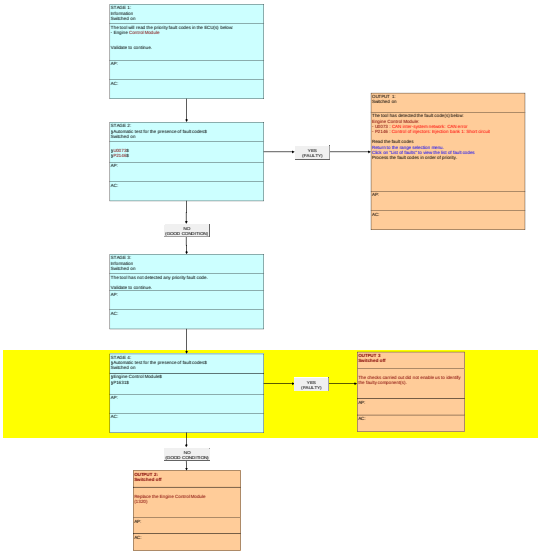

INFORMATION : FAULT CODE P0668 (ENGINE ECU)

SPECIAL FEATURE :

FOR : 1CB7 - B0FBM : DV6C TURBO DIESEL

FOR : 1CX7 - B0FBM : DV6C TURBO DIESEL

FOR : 1C58 - B0FBM : DV6C TURBO DIESEL

FOR : 1PT7 - B0FBM : DV6C TURBO DIESEL

FOR : 1PW2 - B0FBM : DV6C TURBO DIESEL

FOR : 1CB8 - B0FBM : DV6C TURBO DIESEL

FOR : 1CXA - B0FBM : DV6C TURBO DIESEL

FOR : 1CYA - B0FBM : DV6C TURBO DIESEL

FOR : 1PTB - B0FBM : DV6C TURBO DIESEL

FOR : 1PTC - B0FBM : DV6C TURBO DIESEL

FOR : 1PIA - B0FBM : DV6C TURBO DIESEL

FOR : 1CMJ - B0FBM : DV6C TURBO DIESEL

FOR : 1PMJ - B0FBM : DV6C TURBO DIESEL

Engine ECU CONTINENTAL SID 807 branch 2	
Fault code	P0668
After sales description of the fault code	ECU internal temperature measurement : Short circuit to earth
Description of the diagnostics	Voltage less than 0,2 V for 1400 ms
Conditions of activation of the diagnostics	At least one of the following conditions must be fulfilled - Ignition switched on - engine running
Conditions of disappearance of the fault	Driving for 5 minutes
Down-grade modes if fault present	-
Switching on of the warning lamp and/or	-

warning message	
Main customer complaints likely	Jerking/stalling
	Lack of power
	Starting problem
Suspect areas	Engine ECU

Fault code(s): P0606 or P0667 or P0668 or P0669 or P1621 or P1631

Reminder DTC

Do not fill in this section for the FLOW CHART phase

DTC no.	Alternates text of the DTC	Multi type	Conditions for fault finding	Downgraded mode after a fault is ascertained	Lamp(s) to be on during the test	Suspected areas Major control steps	The client effect(s)/symptom(s) associated with the DTC(s)	Fault code(s) to be dealt with before working through this flow chart	Tools required
P0606	ECU: "Watchdog" internal fault (Engine Control Module)	no							
P0667	ECU:internal temperature sensor: Voltage variation outside tolerance	no							
P0668	ECU:internal temperature sensor: Temperature too high	no							
P0669	ECU:internal temperature sensor: Temperature too low	no							
P1621	ECU: Software redundancy fault at injection level: (Level 2)	no							
P1631	ECU: Internal fault (injection with raised fuel)	no							

PRE-CHECK

FLOW CHART Test procedure

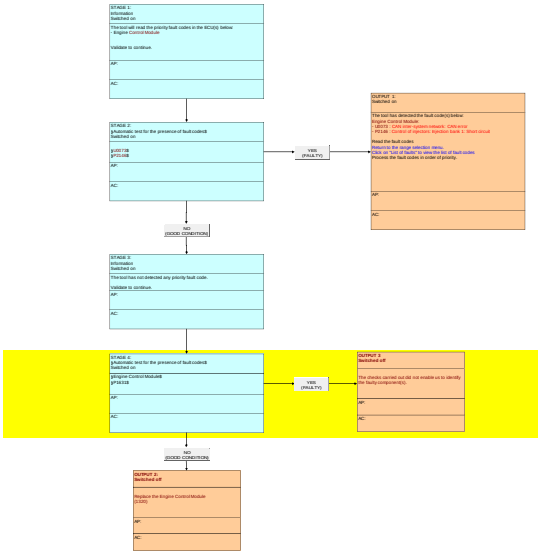

INFORMATION : FAULT CODE P0669 (ENGINE ECU)

SPECIAL FEATURE :

FOR : 1CB7 - B0FBM : DV6C TURBO DIESEL

FOR : 1CX7 - B0FBM : DV6C TURBO DIESEL

FOR : 1C58 - B0FBM : DV6C TURBO DIESEL

FOR : 1PT7 - B0FBM : DV6C TURBO DIESEL

FOR : 1PW2 - B0FBM : DV6C TURBO DIESEL

FOR : 1CB8 - B0FBM : DV6C TURBO DIESEL

FOR : 1CXA - B0FBM : DV6C TURBO DIESEL

FOR : 1CYA - B0FBM : DV6C TURBO DIESEL

FOR : 1PTB - B0FBM : DV6C TURBO DIESEL

FOR : 1PTC - B0FBM : DV6C TURBO DIESEL

FOR : 1PIA - B0FBM : DV6C TURBO DIESEL

FOR : 1CMJ - B0FBM : DV6C TURBO DIESEL

FOR : 1PMJ - B0FBM : DV6C TURBO DIESEL

Engine ECU CONTINENTAL SID 807 branch 2	
Fault code	P0669
After sales description of the fault code	ECU internal temperature measurement : Short circuit to positive
Description of the diagnostics	Voltage higher than 3,3 V for 1400 ms
Conditions of activation of the diagnostics	At least one of the following conditions must be fulfilled - Ignition switched on - engine running
Conditions of disappearance of the fault	Driving for 5 minutes
Down-grade modes if fault present	-
Switching on of the warning lamp and/or	-

warning message	
Main customer complaints likely	Jerking/stalling
	Lack of power
	Starting problem
Suspect areas	Engine ECU

Fault code(s): P0606 or P0667 or P0668 or P0669 or P1621 or P1631

Reminder DTC

Do not fill in this section for the FLOW CHART phase

DTC no.	Alternates text of the DTC	Multi type	Conditions for fault finding	Downgraded mode after a fault is ascertained	Lamp(s) to be on during the test	Suspected areas Major control steps	The client effect(s)/symptom(s) associated with the DTC(s)	Fault code(s) to be dealt with before working through this flow chart	Tools required
P0606	ECU: "Watchdog" internal fault (Engine Control Module)	no							
P0667	ECU:internal temperature sensor: Voltage variation outside tolerance	no							
P0668	ECU:internal temperature sensor: Temperature too high	no							
P0669	ECU:internal temperature sensor: Temperature too low	no							
P1621	ECU: Software redundancy fault at injection level: (Level 2)	no							
P1631	ECU: Internal fault (injection with raised fuel)	no							

PRE-CHECK

FLOW CHART Test procedure

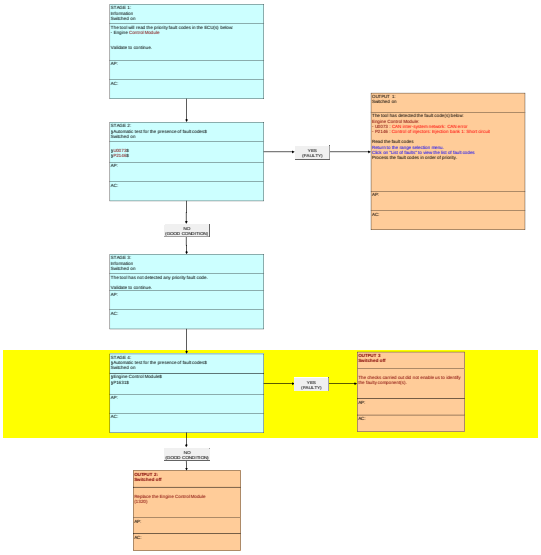

INFORMATION : FAULT CODE P0691 (ENGINE MANAGEMENT ECU)

SPECIAL FEATURE :

FOR : 1CB7 - B0FBM : DV6C TURBO DIESEL

FOR : 1CX7 - B0FBM : DV6C TURBO DIESEL

FOR : 1C58 - B0FBM : DV6C TURBO DIESEL

FOR : 1PT7 - B0FBM : DV6C TURBO DIESEL

FOR : 1PW2 - B0FBM : DV6C TURBO DIESEL

FOR : 1CB8 - B0FBM : DV6C TURBO DIESEL

FOR : 1CXA - B0FBM : DV6C TURBO DIESEL

FOR : 1CYA - B0FBM : DV6C TURBO DIESEL

FOR : 1PTB - B0FBM : DV6C TURBO DIESEL

FOR : 1PTC - B0FBM : DV6C TURBO DIESEL

FOR : 1PIA - B0FBM : DV6C TURBO DIESEL

FOR : 1PMJ - B0FBM : DV6C TURBO DIESEL

FOR : 1CMJ - B0FBM : DV6C TURBO DIESEL

Engine ECU CONTINENTAL SID 807 branch 2	
Fault code	P0691
After sales description of the fault code	electric cooling fan unit : Short-circuit to earth or open circuit on the control of cooling fan 1
Description of the diagnostics	Electrical fault detected for 5 s
Conditions of activation of the diagnostics	engine running
Conditions of disappearance of the fault	Engine running hot for 5 minutes with the cooling fan activated
Down-grade modes if fault present	Request for immediate declutching of the air conditioning compressor
	Switching to fuel "normal reduced flow" mode
	Deactivation of the request for regeneration of the particle filter from the diagnostic tool
Switching on of the	

warning lamp and/or warning message	"SERVICE" warning lamp
Main customer complaints likely	Engine overheating with illumination of the engine coolant temperature indicator light
	Absence of automatic stopping of the internal combustion engine (If the vehicle has the Stop and Start system)
Suspect areas	Fan assembly
	Fuse
	Electrical harnesses
	Connectors

Fault code(s): P0691 or P0692 or P0693 or P0694



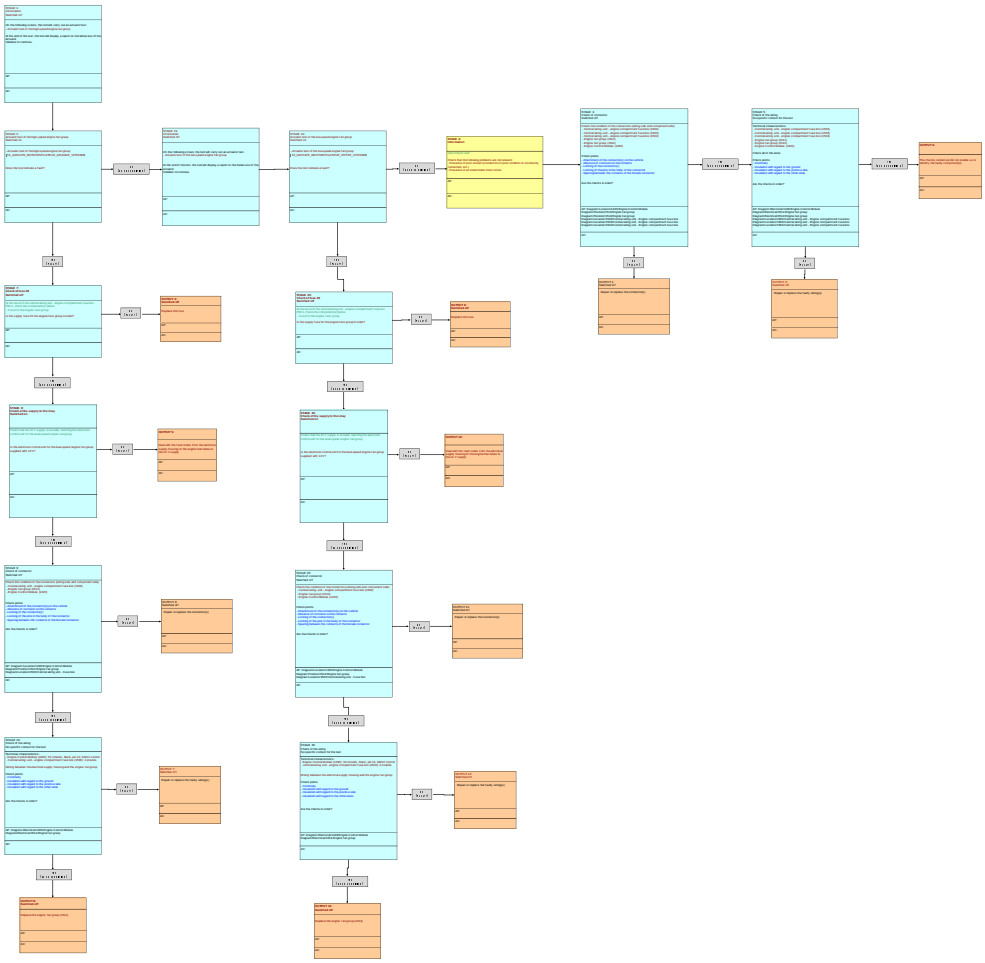

INFORMATION : FAULT CODE P0692 (ENGINE ECU)

SPECIAL FEATURE :

FOR : 1CB7 - B0FBM : DV6C TURBO DIESEL

FOR : 1CX7 - B0FBM : DV6C TURBO DIESEL

FOR : 1C58 - B0FBM : DV6C TURBO DIESEL

FOR : 1PT7 - B0FBM : DV6C TURBO DIESEL

FOR : 1PW2 - B0FBM : DV6C TURBO DIESEL

FOR : 1CB8 - B0FBM : DV6C TURBO DIESEL

FOR : 1CXA - B0FBM : DV6C TURBO DIESEL

FOR : 1CYA - B0FBM : DV6C TURBO DIESEL

FOR : 1PTB - B0FBM : DV6C TURBO DIESEL

FOR : 1PTC - B0FBM : DV6C TURBO DIESEL

FOR : 1PIA - B0FBM : DV6C TURBO DIESEL

FOR : 1CMJ - B0FBM : DV6C TURBO DIESEL

FOR : 1PMJ - B0FBM : DV6C TURBO DIESEL

Engine ECU CONTINENTAL SID 807 branch 2	
Fault code	P0692
After sales description of the fault code	electric cooling fan unit : Short-circuit to positive on the control of cooling fan 1
Description of the diagnostics	Electrical fault detected for 5 s
Conditions of activation of the diagnostics	engine running
Conditions of disappearance of the fault	Engine running hot for 5 minutes with the cooling fan activated
Down-grade modes if fault present	Request for immediate declutching of the air conditioning compressor
	Switching to fuel "normal reduced flow" mode
	Deactivation of the request for regeneration of the particle filter from the diagnostic tool
Switching on of the	

warning lamp and/or warning message	"SERVICE" warning lamp
Main customer complaints likely	Engine overheating with illumination of the engine coolant temperature indicator light
	Absence of automatic stopping of the internal combustion engine (If the vehicle has the Stop and Start system)
Suspect areas	Fan assembly
	Fuse
	Electrical harnesses
	Connectors

Fault code(s): P0691 or P0692 or P0693 or P0694



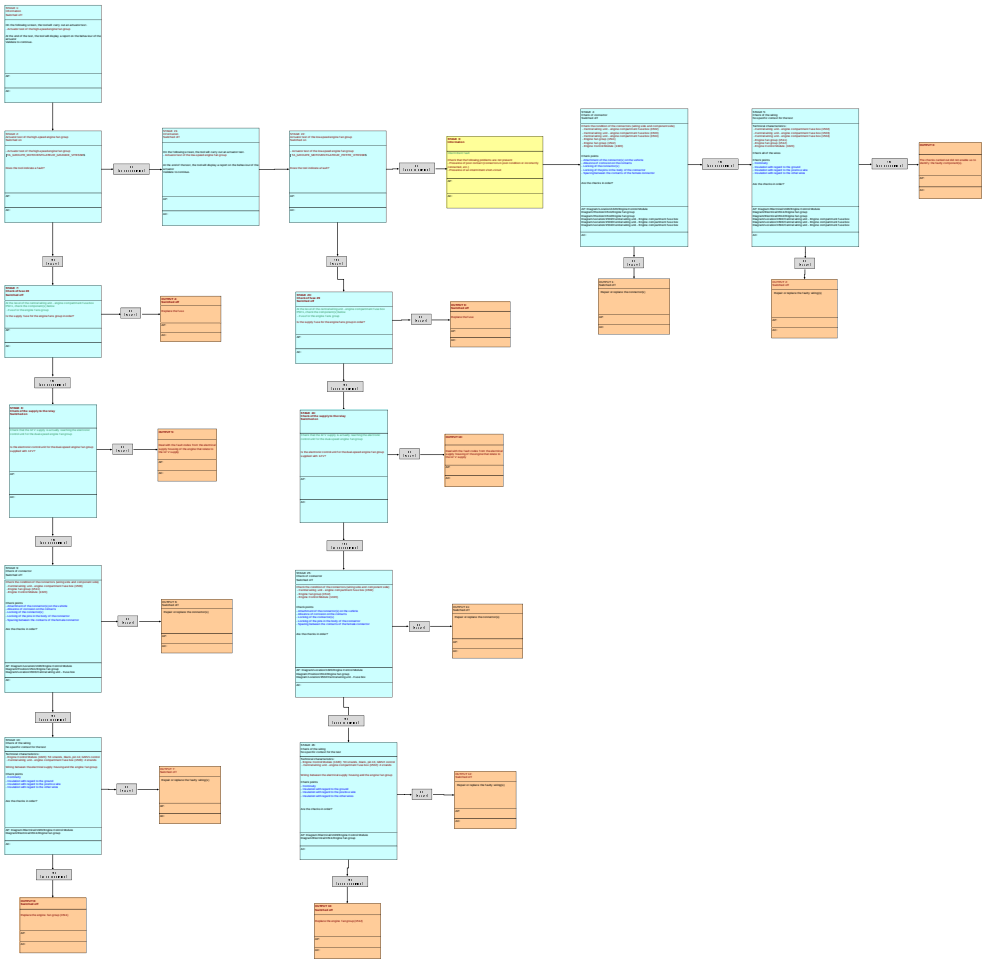

INFORMATION : FAULT CODE P0693 (ENGINE ECU)

SPECIAL FEATURE :

FOR : 1CB7 - B0FBM : DV6C TURBO DIESEL

FOR : 1CX7 - B0FBM : DV6C TURBO DIESEL

FOR : 1C58 - B0FBM : DV6C TURBO DIESEL

FOR : 1PT7 - B0FBM : DV6C TURBO DIESEL

FOR : 1PW2 - B0FBM : DV6C TURBO DIESEL

FOR : 1CB8 - B0FBM : DV6C TURBO DIESEL

FOR : 1CXA - B0FBM : DV6C TURBO DIESEL

FOR : 1CYA - B0FBM : DV6C TURBO DIESEL

FOR : 1PTB - B0FBM : DV6C TURBO DIESEL

FOR : 1PTC - B0FBM : DV6C TURBO DIESEL

FOR : 1PIA - B0FBM : DV6C TURBO DIESEL

FOR : 1CMJ - B0FBM : DV6C TURBO DIESEL

FOR : 1PMJ - B0FBM : DV6C TURBO DIESEL

Engine ECU CONTINENTAL SID 807 branch 2	
Fault code	P0693
After sales description of the fault code	electric cooling fan unit : Short-circuit to earth or open circuit on the control of cooling fan 2
Description of the diagnostics	Electrical fault detected for 5 s
Conditions of activation of the diagnostics	engine running
Conditions of disappearance of the fault	Engine running hot for 5 minutes with the cooling fan activated
Down-grade modes if fault present	Activation of the cooling fan at fast speed
Switching on of the warning lamp and/or warning message	-

Main customer complaints likely	Engine overheating with illumination of the engine coolant temperature indicator light
	No automatic stopping of the internal combustion engine (If the vehicle has the Stop and Start system)
Suspect areas	Fan assembly
	Fuse
	Electrical harnesses
	Connectors

Fault code(s): P0691 or P0692 or P0693 or P0694



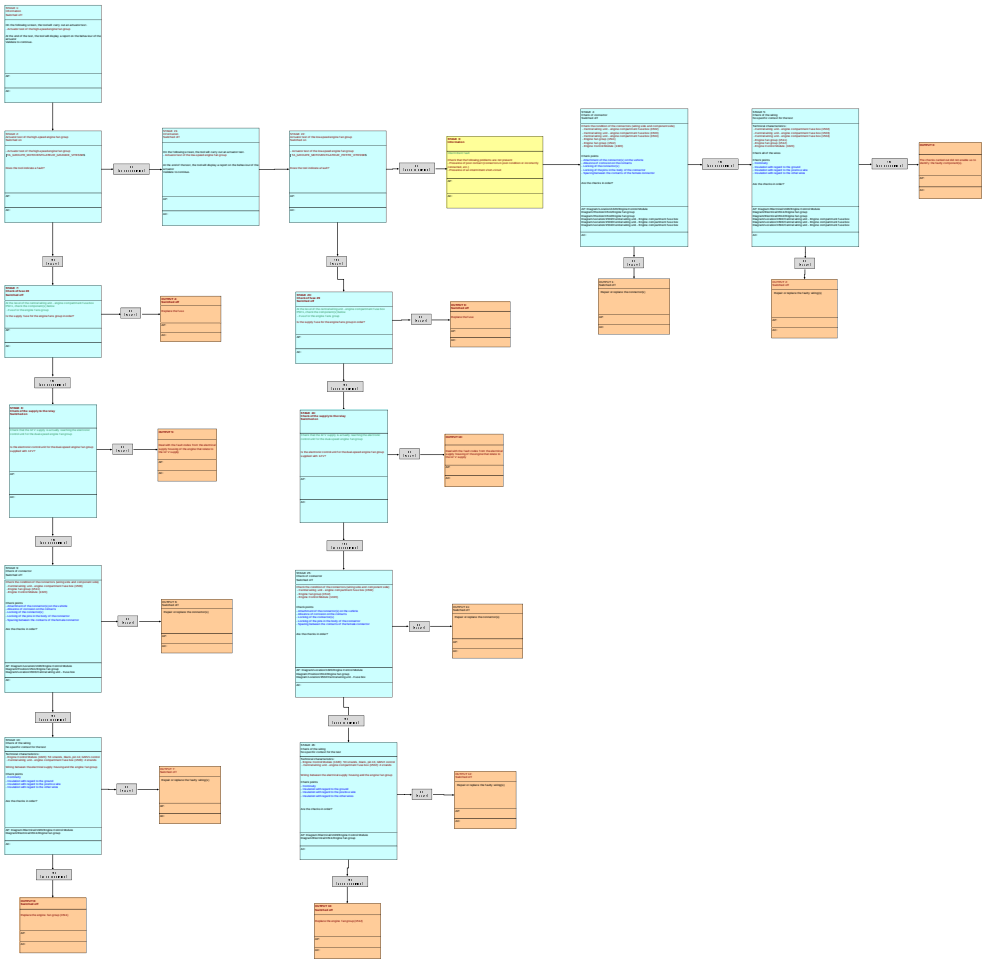

INFORMATION : FAULT CODE P0694 (ENGINE ECU)

SPECIAL FEATURE :

FOR : 1CB7 - B0FBM : DV6C TURBO DIESEL

FOR : 1CX7 - B0FBM : DV6C TURBO DIESEL

FOR : 1C58 - B0FBM : DV6C TURBO DIESEL

FOR : 1PT7 - B0FBM : DV6C TURBO DIESEL

FOR : 1PW2 - B0FBM : DV6C TURBO DIESEL

FOR : 1CB8 - B0FBM : DV6C TURBO DIESEL

FOR : 1CXA - B0FBM : DV6C TURBO DIESEL

FOR : 1CYA - B0FBM : DV6C TURBO DIESEL

FOR : 1PTB - B0FBM : DV6C TURBO DIESEL

FOR : 1PTC - B0FBM : DV6C TURBO DIESEL

FOR : 1PIA - B0FBM : DV6C TURBO DIESEL

FOR : 1CMJ - B0FBM : DV6C TURBO DIESEL

FOR : 1PMJ - B0FBM : DV6C TURBO DIESEL

Engine ECU CONTINENTAL SID 807 branch 2	
Fault code	P0694
After sales description of the fault code	electric cooling fan unit : Short-circuit to positive on the control of cooling fan 2
Description of the diagnostics	Electrical fault detected for 5 s
Conditions of activation of the diagnostics	engine running
Conditions of disappearance of the fault	Engine running hot for 5 minutes with the cooling fan activated
Down-grade modes if fault present	Activation of the cooling fan at fast speed
Switching on of the warning lamp and/or warning message	-

Main customer complaints likely	Engine overheating with illumination of the engine coolant temperature indicator light
	No automatic stopping of the internal combustion engine (If the vehicle has the Stop and Start system)
Suspect areas	Fan assembly
	Fuse
	Electrical harnesses
	Connectors

Fault code(s): P0691 or P0692 or P0693 or P0694



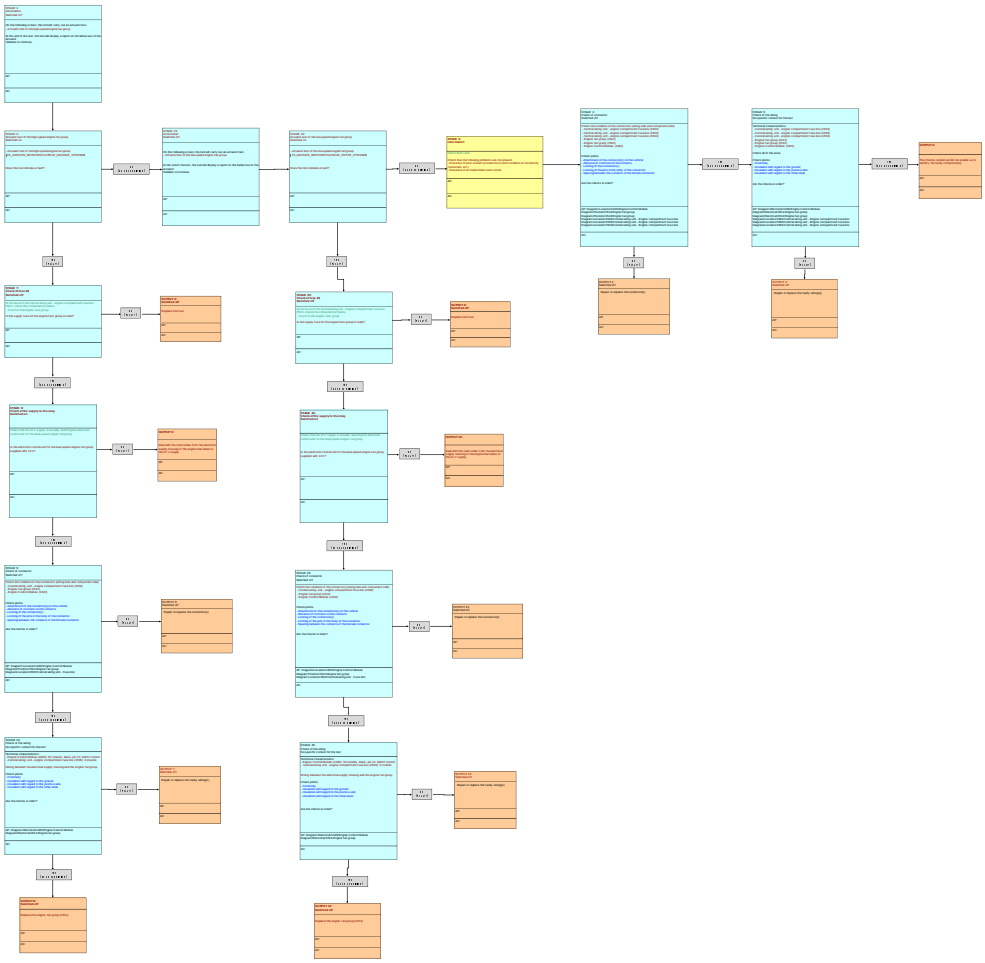

INFORMATION : FAULT CODE P0703 (ENGINE ECU)

SPECIAL FEATURE :

FOR : 1CB7 - B0FBM : DV6C TURBO DIESEL

FOR : 1CX7 - B0FBM : DV6C TURBO DIESEL

FOR : 1C58 - B0FBM : DV6C TURBO DIESEL

FOR : 1PT7 - B0FBM : DV6C TURBO DIESEL

FOR : 1PW2 - B0FBM : DV6C TURBO DIESEL

FOR : 1CB8 - B0FBM : DV6C TURBO DIESEL

FOR : 1CXA - B0FBM : DV6C TURBO DIESEL

FOR : 1CYA - B0FBM : DV6C TURBO DIESEL

FOR : 1PTB - B0FBM : DV6C TURBO DIESEL

FOR : 1PTC - B0FBM : DV6C TURBO DIESEL

FOR : 1PIA - B0FBM : DV6C TURBO DIESEL

FOR : 1PMJ - B0FBM : DV6C TURBO DIESEL

FOR : 1CMJ - B0FBM : DV6C TURBO DIESEL

Engine ECU CONTINENTAL SID 807 branch 2	
Fault code	P0703
After sales description of the fault code	Measurement of the brake pedal position : Incoherence between the two brake sensors detected under acceleration
Description of the diagnostics	Lack of coherence between the main brake and the secondary brake during sharp acceleration for 500 ms
Conditions of activation of the diagnostics	Ignition switched on
Conditions of disappearance of the fault	Driving for 5 minutes
Down-grade modes if fault present	Irreversible deactivation of the vehicle cruise control
Switching on of the warning lamp and/or warning message	-

Main customer complaints likely	Jerking/stalling
	Lack of power
Suspect areas	Brake pedal switch
	Fuses
	Electrical harnesses
	Connectors

Fault code(s): P0703 or P1536



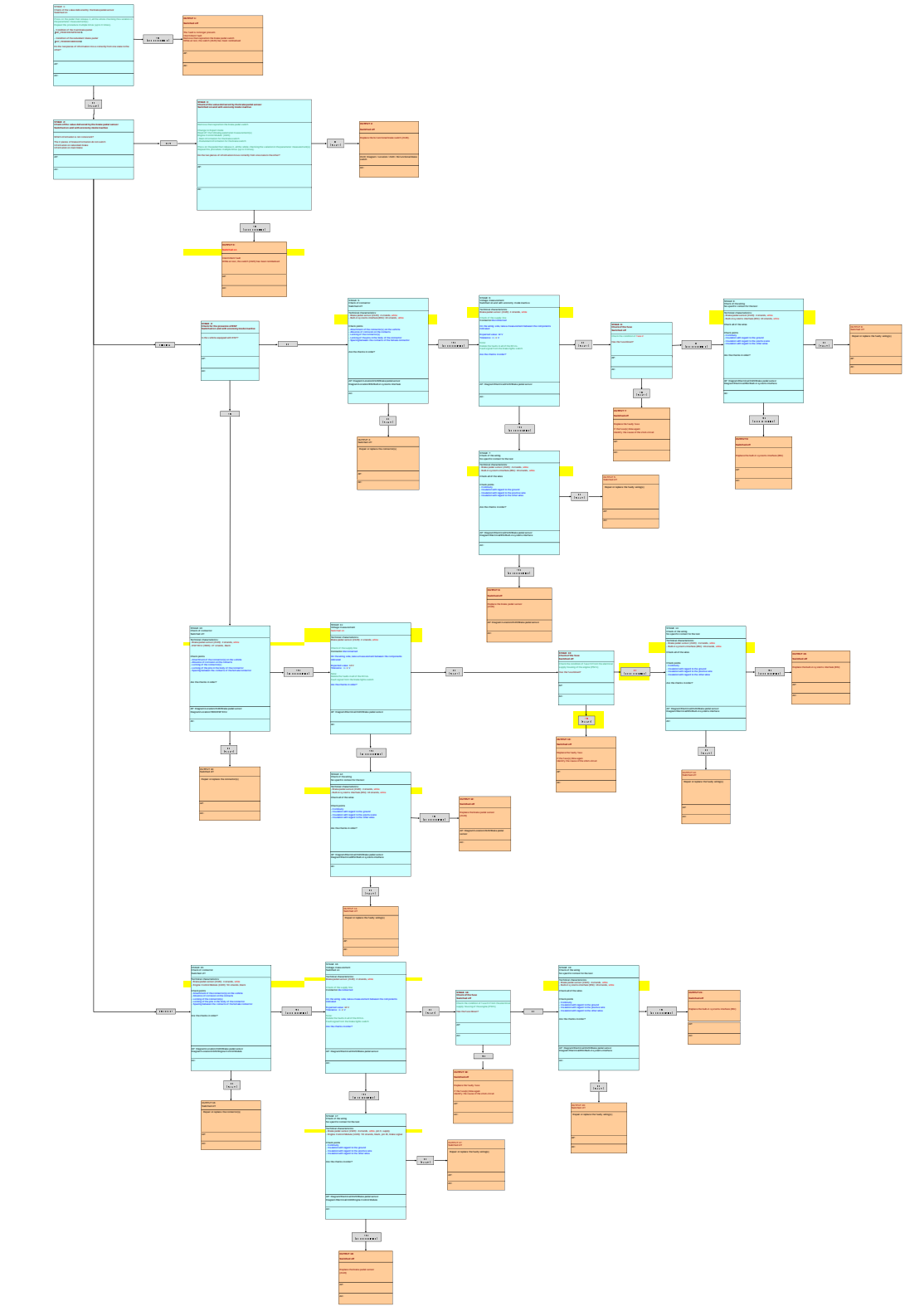

INFORMATION : FAULT CODE P0704 (ENGINE ECU)

SPECIAL FEATURE :

FOR : 1CB7 - B0FBM : DV6C TURBO DIESEL

FOR : 1CX7 - B0FBM : DV6C TURBO DIESEL

FOR : 1C58 - B0FBM : DV6C TURBO DIESEL

FOR : 1PT7 - B0FBM : DV6C TURBO DIESEL

FOR : 1PW2 - B0FBM : DV6C TURBO DIESEL

FOR : 1CB8 - B0FBM : DV6C TURBO DIESEL

FOR : 1CXA - B0FBM : DV6C TURBO DIESEL

FOR : 1CYA - B0FBM : DV6C TURBO DIESEL

FOR : 1PTB - B0FBM : DV6C TURBO DIESEL

FOR : 1PTC - B0FBM : DV6C TURBO DIESEL

FOR : 1PIA - B0FBM : DV6C TURBO DIESEL

FOR : 1CMJ - B0FBM : DV6C TURBO DIESEL

FOR : 1PMJ - B0FBM : DV6C TURBO DIESEL

Engine ECU CONTINENTAL SID 807 branch 2	
Fault code	P0704
After sales description of the fault code	Measurement of the clutch pedal position : Absence of pedal presses on a great variation of speed
Description of the diagnostics	No change of status of the clutch pedal sensor after the vehicle has started
Conditions of activation of the diagnostics	engine running
Conditions of disappearance of the fault	Driving for 5 min and changing through the gears several times
Down-grade modes if fault present	Reversible deactivation of the vehicle cruise control
Switching on of the warning lamp and/or warning message	-
Main customer complaints likely	Jerking/stalling
	Lack of power
	Clutch switch

Suspect areas	Fuse
	Electrical harness
	Connectors

Fault code(s): P0704 or P0831

Reminder DTC

Do not fill in this section for the FLOW CHART phase

DTC no.	Alternates text of the DTC	Fault type	Conditions for fault finding	Downgraded mode after a fault is ascertained	Driver warning lamp	Suspected areas Major control steps	The client effect(s)/symptom(s) associated with the DTC(s)	Fault code(s) to be dealt with before working through this flow chart	Tools required
P0704	Clutch pedal sensor: Inconsistency of clutch switch signal (failure to detect pedal pressure over a wide range of speeds)	11							
P0831	Clutch pedal sensor: on/off: Clutch plausibility fault (failure to detect pedal pressure over a set time period)	11							

PRE-CHECK
FLOW CHART Test procedure

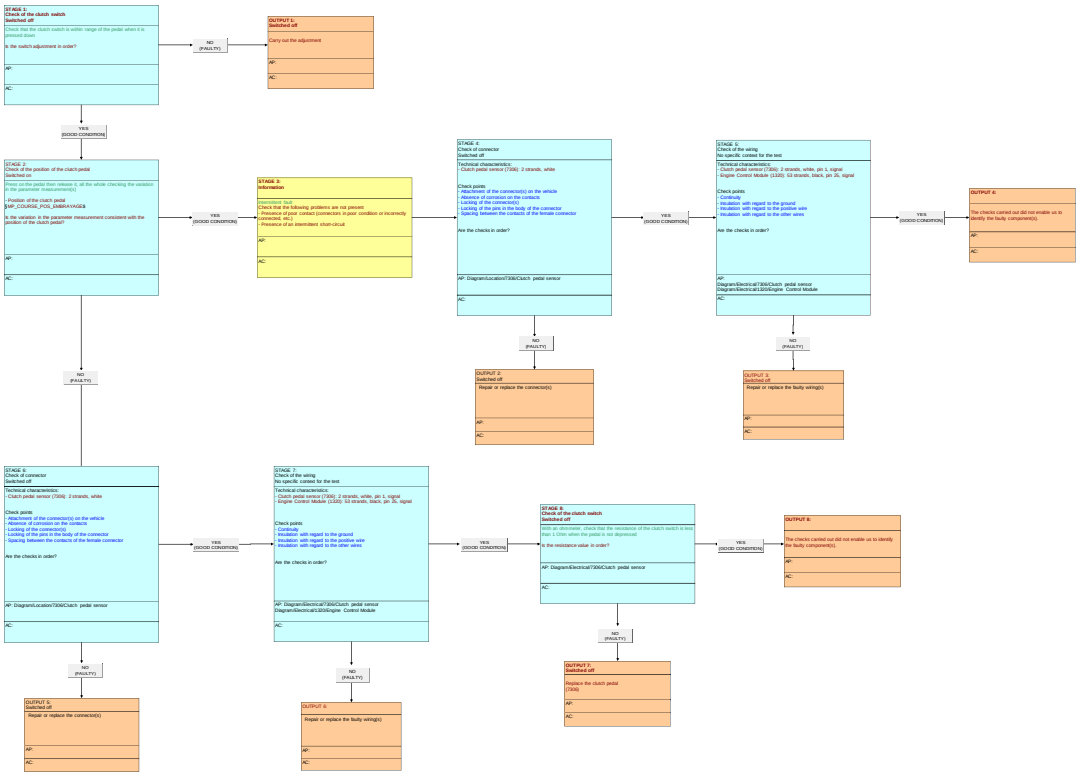

INFORMATION : FAULT CODE P0812 (ENGINE ECU)

SPECIAL FEATURE :

FOR : 1CB7 - B0FBM : DV6C TURBO DIESEL

FOR : 1CX7 - B0FBM : DV6C TURBO DIESEL

FOR : 1C58 - B0FBM : DV6C TURBO DIESEL

FOR : 1PT7 - B0FBM : DV6C TURBO DIESEL

FOR : 1PW2 - B0FBM : DV6C TURBO DIESEL

FOR : 1CB8 - B0FBM : DV6C TURBO DIESEL

FOR : 1CXA - B0FBM : DV6C TURBO DIESEL

FOR : 1CYA - B0FBM : DV6C TURBO DIESEL

FOR : 1PTB - B0FBM : DV6C TURBO DIESEL

FOR : 1PTC - B0FBM : DV6C TURBO DIESEL

FOR : 1PIA - B0FBM : DV6C TURBO DIESEL

FOR : 1CMJ - B0FBM : DV6C TURBO DIESEL

FOR : 1PMJ - B0FBM : DV6C TURBO DIESEL

Engine ECU CONTINENTAL SID 807 branch 2	
Fault code	P0812
After sales description of the fault code	Intersystems CAN : The engine receives the information that reverse gear is engaged even though that is not possible
Description of the diagnostics	Fault with the reverse gear switch : Information not valid (For 1 second)
Conditions of activation of the diagnostics	Engine running
Conditions of disappearance of the fault	-
Down-grade modes if fault present	-
Switching on of the warning lamp and/or warning message	-

Main customer complaints likely	-
Suspect areas	Reverse lamp switch

Fault code(s): P0812

Reminder DTC

Do not fill in this section for the FLOW CHART phase

DTC no.	Aftersales text of the DTC	Fault type	Conditions for fault finding	Downgraded mode after a fault is ascertained	Consequences of driving with the fault	Suspected areas Major control steps	The client effect(s)/symptom(s) associated with the DTCs	Fault code(s) to be dealt with before working through this flow chart	Tools required
P0812	Reversing sensor: Plausibility of engagement of reverse gear at the level of the switch	EE							

PRE-CHECK

FLOW CHART Test procedure

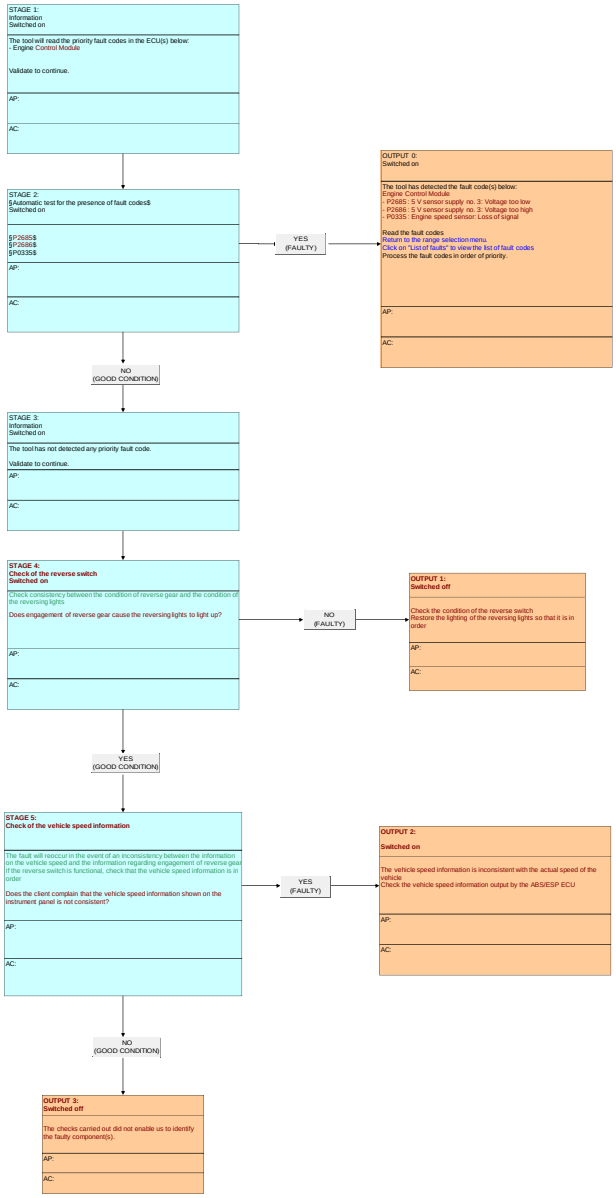

INFORMATION : FAULT CODE P0831 (ENGINE ECU)

SPECIAL FEATURE :

FOR : 1CB7 - B0FBM : DV6C TURBO DIESEL

FOR : 1CX7 - B0FBM : DV6C TURBO DIESEL

FOR : 1C58 - B0FBM : DV6C TURBO DIESEL

FOR : 1PT7 - B0FBM : DV6C TURBO DIESEL

FOR : 1PW2 - B0FBM : DV6C TURBO DIESEL

FOR : 1CB8 - B0FBM : DV6C TURBO DIESEL

FOR : 1CXA - B0FBM : DV6C TURBO DIESEL

FOR : 1CYA - B0FBM : DV6C TURBO DIESEL

FOR : 1PTB - B0FBM : DV6C TURBO DIESEL

FOR : 1PTC - B0FBM : DV6C TURBO DIESEL

FOR : 1PIA - B0FBM : DV6C TURBO DIESEL

FOR : 1CMJ - B0FBM : DV6C TURBO DIESEL

FOR : 1PMJ - B0FBM : DV6C TURBO DIESEL

Engine ECU CONTINENTAL SID 807 branch 2	
Fault code	P0831
After sales description of the fault code	Measurement of the clutch pedal position : No pressing of the pedal while driving for a certain time
Description of the diagnostics	No detection of pressing of the clutch pedal between 3 km/h and 10 km/h (For 30 minutes)
Conditions of activation of the diagnostics	engine running
Conditions of disappearance of the fault	Driving with the engine warm for 5 minutes with several gear changes
Down-grade modes if fault present	Reversible deactivation of the vehicle cruise control
Switching on of the warning lamp and/or warning message	-
Main customer complaints likely	Jerking/stalling
	Lack of power
	Clutch switch

Suspect areas	Fuse
	Electrical harness
	Connectors

Fault code(s): P0704 or P0831

Reminder DTC

Do not fill in this section for the FLOW CHART phase

DTC no.	Alternates text of the DTC	Fault type	Conditions for fault finding	Downgraded mode after a fault is ascertained	Lamp on / off (Engine)	Suspected areas Major control steps	The client effect(s)/symptom(s) associated with the DTC(s)	Fault code(s) to be dealt with before working through this flow chart	Tools required
P0704	Clutch pedal sensor: Inconsistency of clutch switch signal (failure to detect pedal pressure over a wide range of speeds)	11							
P0831	Clutch pedal sensor: on/off: Clutch plausibility fault (failure to detect pedal pressure over a set time period)	11							

PRE-CHECK
FLOW CHART Test procedure

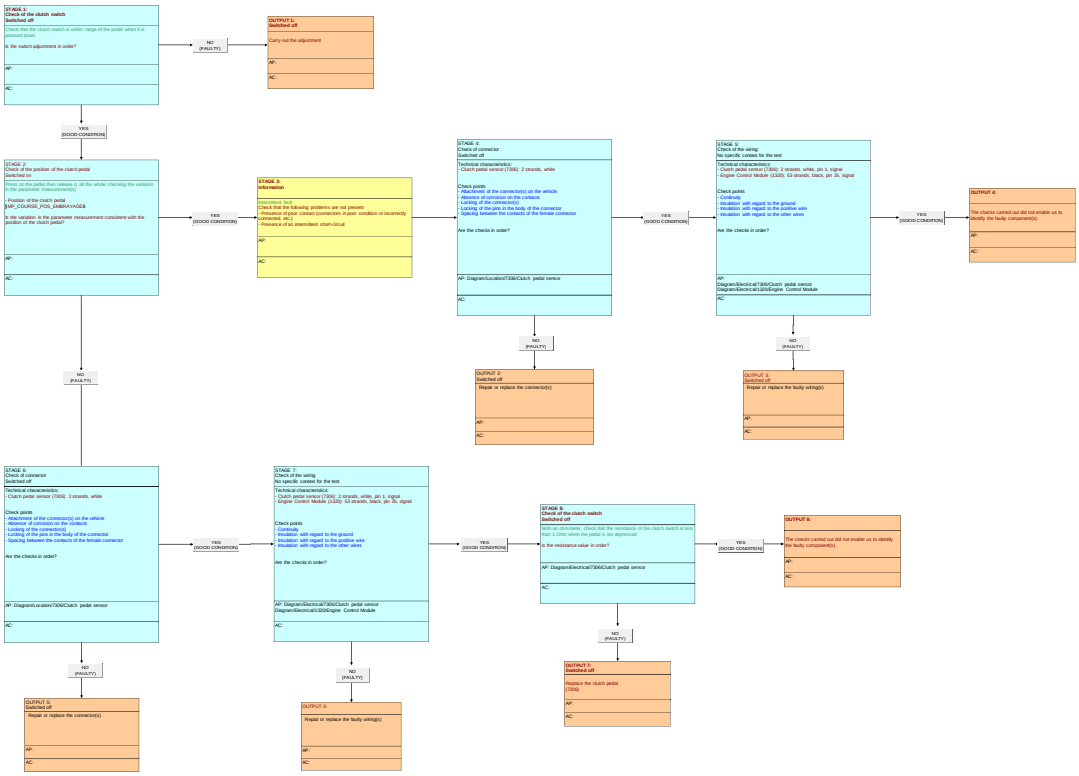

INFORMATION : FAULT CODE P0A1A (ENGINE MANAGEMENT ECU)

SPECIAL FEATURE :

FOR : 1CB7 - B0FBM : DV6C TURBO DIESEL

FOR : 1CX7 - B0FBM : DV6C TURBO DIESEL

FOR : 1C58 - B0FBM : DV6C TURBO DIESEL

FOR : 1PT7 - B0FBM : DV6C TURBO DIESEL

FOR : 1PW2 - B0FBM : DV6C TURBO DIESEL

FOR : 1CB8 - B0FBM : DV6C TURBO DIESEL

FOR : 1CXA - B0FBM : DV6C TURBO DIESEL

FOR : 1CYA - B0FBM : DV6C TURBO DIESEL

FOR : 1PTB - B0FBM : DV6C TURBO DIESEL

FOR : 1PTC - B0FBM : DV6C TURBO DIESEL

FOR : 1PIA - B0FBM : DV6C TURBO DIESEL

FOR : 1CMJ - B0FBM : DV6C TURBO DIESEL

FOR : 1PMJ - B0FBM : DV6C TURBO DIESEL

Engine ECU CONTINENTAL SID 807 branch 2	
Fault code	P0A1A
After sales description of the fault code	Alternator : Alternator communication fault
Description of the diagnostics	Alternator communication fault detected for 500 ms
Conditions of activation of the diagnostics	engine running
Conditions of disappearance of the fault	Driving for 5 minutes
Down-grade modes if fault present	-
Switching on of the warning lamp and/or warning message	-

Main customer complaints likely	Starting problem
	A message is displayed on the multifunction screen
	Jerking/stalling
Suspect areas	Alternator
	Engine ECU
	LIN

Fault code(s): P0620 or P065A or P0A1A or P0A3B or U1400 or U1401

Reminder DTC

Do not fill in this section for the FLOW CHART phase

DTC no.	Alternates text of the DTC	Walk type	Conditions for fault finding	Downgraded mode after a fault is ascertained	Fault warning lamp on	Suspected areas Major control steps	The client effect(s)/symptom(s) associated with the DTC(s)	Fault code(s) to be dealt with before working through this flow chart	Tools required
P0620	Alternator: Electrical fault	no							
P065A	Alternator: Mechanical fault	no							
P0A1A	Alternator: Alternator communication fault	no							
P0A3B	Alternator: Temperature fault	no							
U1400	Alternator: LIN network: Recovid of a fault in the LIN network								
U1401	Alternator: LIN network: Recovid of a fault in a slave node of the alternator LIN network								

PRE-CHECK
FLOW CHART Test procedure

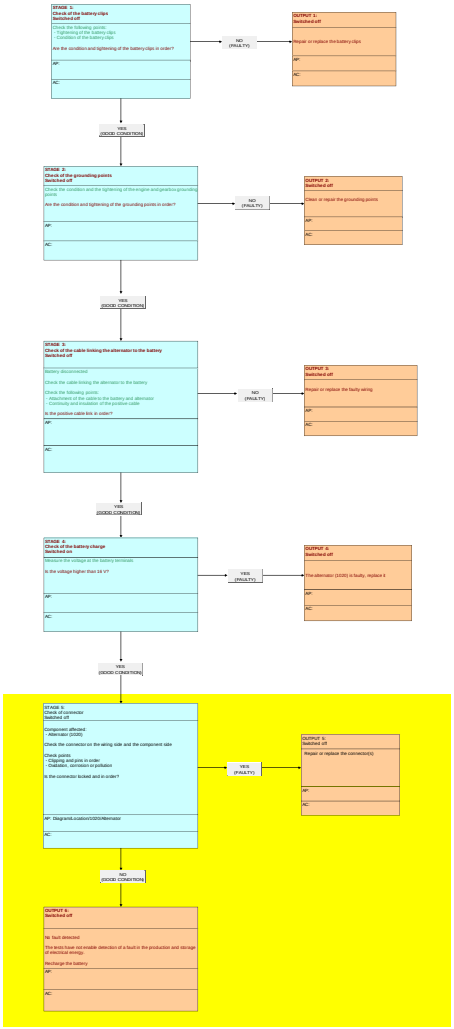

INFORMATION : FAULT CODE P0A3B (ENGINE ECU)

SPECIAL FEATURE :

FOR : 1CB7 - B0FBM : DV6C TURBO DIESEL

FOR : 1CX7 - B0FBM : DV6C TURBO DIESEL

FOR : 1C58 - B0FBM : DV6C TURBO DIESEL

FOR : 1PT7 - B0FBM : DV6C TURBO DIESEL

FOR : 1PW2 - B0FBM : DV6C TURBO DIESEL

FOR : 1CXA - B0FBM : DV6C TURBO DIESEL

FOR : 1CYA - B0FBM : DV6C TURBO DIESEL

FOR : 1CB8 - B0FBM : DV6C TURBO DIESEL

FOR : 1CXA - B0FBM : DV6C TURBO DIESEL

FOR : 1CYA - B0FBM : DV6C TURBO DIESEL

FOR : 1PTB - B0FBM : DV6C TURBO DIESEL

FOR : 1PTC - B0FBM : DV6C TURBO DIESEL

FOR : 1PIA - B0FBM : DV6C TURBO DIESEL

FOR : 1CMJ - B0FBM : DV6C TURBO DIESEL

FOR : 1PMJ - B0FBM : DV6C TURBO DIESEL

Engine ECU CONTINENTAL SID 807 branch 2	
Fault code	P0A3B
After sales description of the fault code	Alternator : Alternator temperature fault
Description of the diagnostics	Alternator temperature fault for 0,5 seconds
Conditions of activation of the diagnostics	engine running
Conditions of disappearance of the fault	Driving for 5 minutes
Down-grade modes if fault present	-
Switching on of the	

warning lamp and/or warning message	-
Main customer complaints likely	Starting problem
	Jerking/stalling
	Lighting of battery warning lamp
Suspect areas	Alternator
	Surroundings of the alternator

Fault code(s): P0620 or P065A or P0A1A or P0A3B or U1400 or U1401

Reminder DTC

Do not fill in this section for the FLOW CHART phase

DTC no.	Alternates text of the DTC	Walk type	Conditions for fault finding	Downgraded mode after a fault is ascertained	Fault warning light on	Suspected areas Major control steps	The client effect(s)/symptom(s) associated with the DTC(s)	Fault code(s) to be dealt with before working through this flow chart	Tools required
P0620	Alternator: Electrical fault	SU							
P065A	Alternator: Mechanical fault	SU							
P0A1A	Alternator: Alternator communication fault	SU							
P0A3B	Alternator: Temperature fault	SU							
U1400	Alternator: LIN network: Missed cut a fault in the LIN network								
U1401	Alternator: LIN network: Missed cut a fault in a lower scale of the alternator LIN network								

PRE-CHECK
FLOW CHART Test procedure

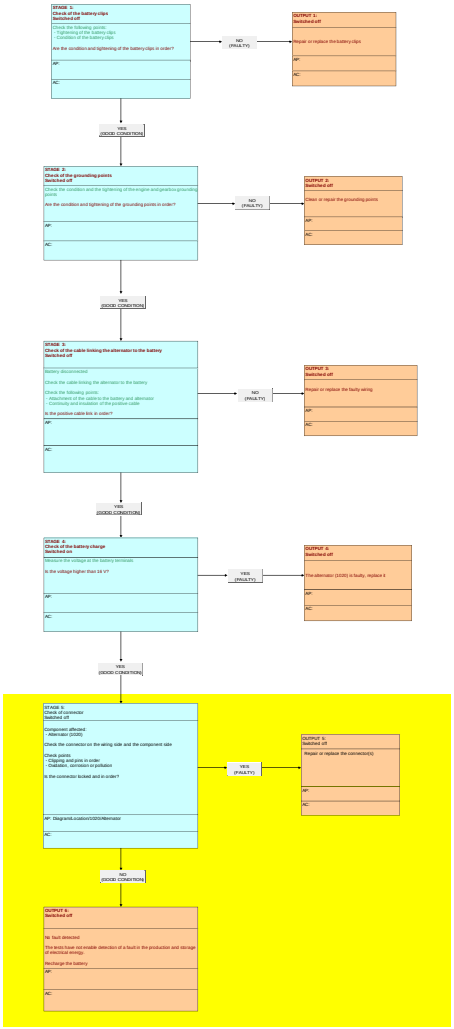

INFORMATION : FAULT CODE P0A88 (ENGINE ECU)

Engine ECU CONTINENTAL SID 807 branch 2	
Fault code	P0A88
After sales description of the fault code	Battery : Voltage of the system below the minimum threshold
Description of the diagnostics	Voltage lower than 0,2V for at least 4 seconds
Conditions of activation of the diagnostics	At least one of the following conditions must be fulfilled - Ignition on - With the engine running
Conditions of disappearance of the fault	At least one of the following conditions must be fulfilled - Ignition on - With the engine running
Down-grade modes if fault present	Deactivation of the "Stop and Start" function
Switching on of the warning lamp and/or warning message	-
Main customer complaints likely	Jerking/stalling Malfunctioning of the idle Lack of power Starting problem
Suspect areas	Battery

Fault code(s): P0516 or P0517 or P0A88 or P0A89

Reminder DTC

Do not fill in this section for the FLOW CHART phase

DTC no.	Alternative text of the DTC	Fault line	Conditions for fault finding	Downgraded mode after a fault is ascertained	Driving strategy	Suspected areas Major control steps	The client effects/symptom(s) associated with the DTCs	Fault code(s) to be dealt with before working through this flow chart	Tools required
P0516	Battery temperature sensor: Threshold lower than the minimum threshold	0/1							
P0517	Battery temperature sensor: Threshold higher than the maximum threshold	0/1							
P0A88	Battery: Voltage lower than the minimum threshold	0/1							
P0A89	Battery: Voltage higher than the minimum threshold	0/1							

PRE-CHECK

FLOW CHART Test procedure

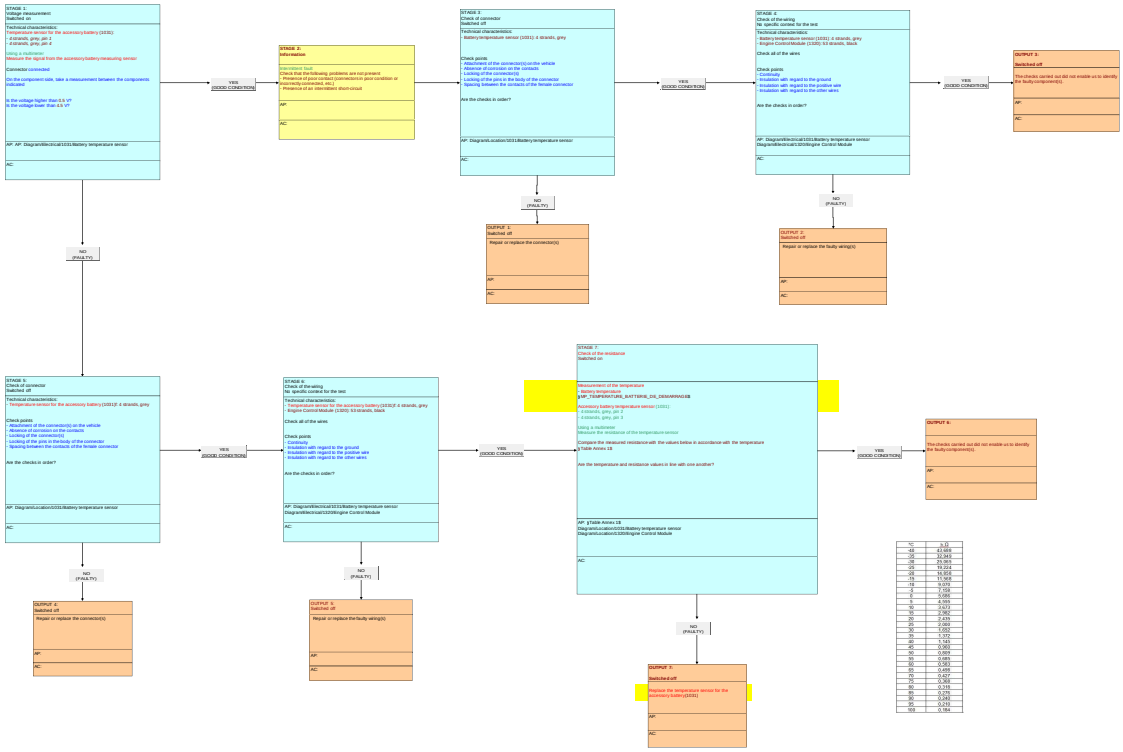

INFORMATION : FAULT CODE P0A89 (ENGINE ECU)

Engine ECU CONTINENTAL SID 807 branch 2	
Fault code	P0A89
After sales description of the fault code	Battery : Voltage of the system above the maximum threshold
Description of the diagnostics	Voltage higher than 4,9 V for 4 seconds
Conditions of activation of the diagnostics	At least one of the following conditions must be fulfilled Ignition on With the engine running
Conditions of disappearance of the fault	At least one of the following conditions must be fulfilled Ignition on With the engine running
Down-grade modes if fault present	Deactivation of the "Stop and Start" function
Switching on of the warning lamp and/or warning message	-
Main customer complaints likely	Jerking/stalling
	Malfunctioning of the idle
	Lack of power
	Starting problem
Suspect areas	Battery

Fault code(s): P0516 or P0517 or P0A88 or P0A89

Reminder DTC

Do not fill in this section for the FLOW CHART phase

DTC no.	Alternative text of the DTC	Fault line	Conditions for fault finding	Downgraded mode after a fault is ascertained	Driving strategy warning	Suspected areas Major control steps	The client effects/symptom(s) associated with the DTCs	Fault code(s) to be dealt with before working through this flow chart	Tools required
P0516	Battery temperature sensor: Threshold lower than the minimum threshold	0/0							
P0517	Battery temperature sensor: Threshold higher than the maximum threshold	0/0							
P0A88	Battery: Voltage lower than the minimum threshold	0/1							
P0A89	Battery: Voltage higher than the minimum threshold	0/0							

PRE-CHECK

FLOW CHART Test procedure

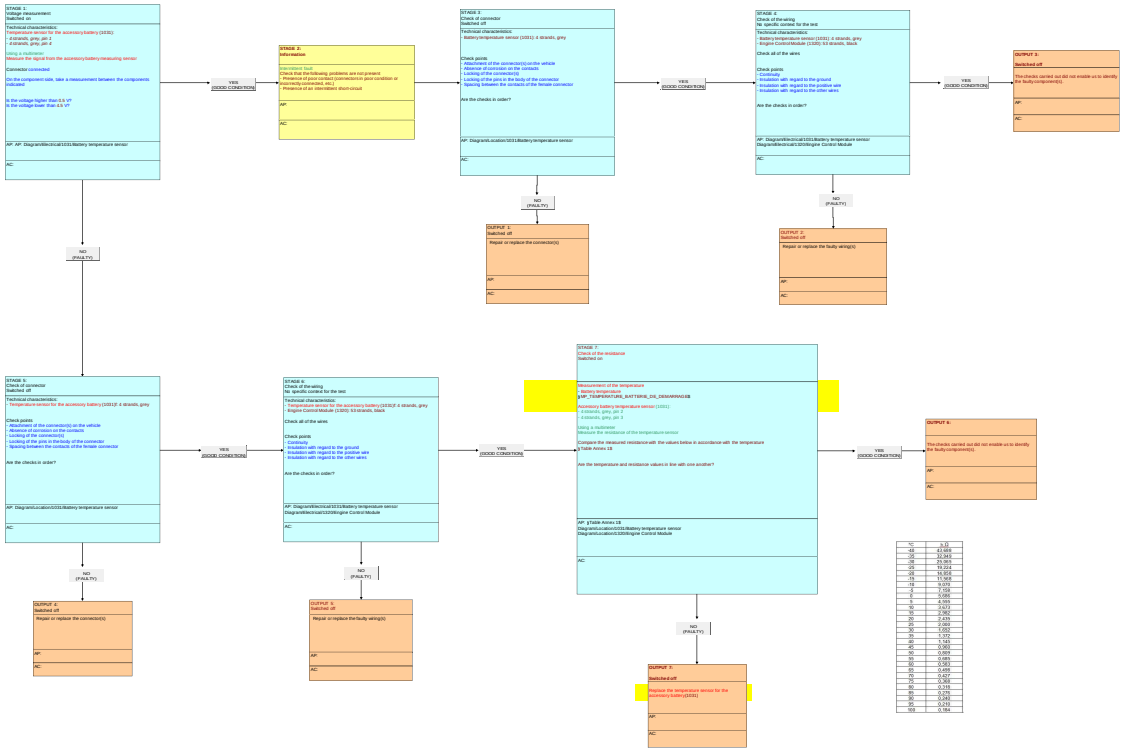

°C	Ω
-40	97.429
-35	72.543
-30	54.369
-25	41.014
-20	31.016
-15	23.676
-10	18.179
-5	14.109
0	11.026
5	8.689
10	6.907
15	5.527
20	4.455
25	3.619
30	2.962
35	2.441
40	2.026
45	1.693
50	1.423
55	1.203
60	1.023
65	0.874
70	0.749
80	0.556
85	0.479
90	0.414
95	0.359
100	0.312

INFORMATION : FAULT CODE P1114 (ENGINE ECU)

SPECIAL FEATURE :

FOR : 1CMJ - B0FBM : DV6C TURBO DIESEL

FOR : 1PMJ - B0FBM : DV6C TURBO DIESEL

Engine ECU CONTINENTAL SID 807 branch 2	
Fault code	P1114
After sales description of the fault code	Computer : Stopping of the engine by injection cut-off fault
Description of the diagnostics	Engine speed detected too high following a request to stop the engine (due to an electrical fault)
Conditions of activation of the diagnostics	engine running
Conditions of disappearance of the fault	Driving for 5 minutes
Down-grade modes if fault present	Cutting of fuel injector 1
	Cutting of fuel injector 2
	Cutting of fuel injector 3
	Cutting of fuel injector 4
	Closing of the fuel flow regulation valve
Switching on of the warning lamp and/or warning message	"SERVICE" warning lamp
Main customer complaints likely	Noise
	Jerking/stalling
	Starting problem
	Malfunctioning of the idle
	Smoke from the exhaust
	Lack of power
	Engine acceleration at wrong time
Suspect areas	Fuel injectors
	Electrical harnesses
	Connectors

Fault code(s): P1114

Reminder DTC

Do not fill in this section for the FLOW CHART phase

DTC no.	Aftersales text of the DTC	Fault type	Conditions for fault finding	Downgraded mode after a fault is ascertained	Illumination of lack or warning light	Suspected areas Major control steps	The client effect(s)/symptom(s) associated with the DTCs	Fault code(s) to be dealt with before working through this flow chart	Tools required
P1114	Monitoring during engine stop: injection fault on stopping	B							

PRE-CHECK

FLOW CHART Test procedure

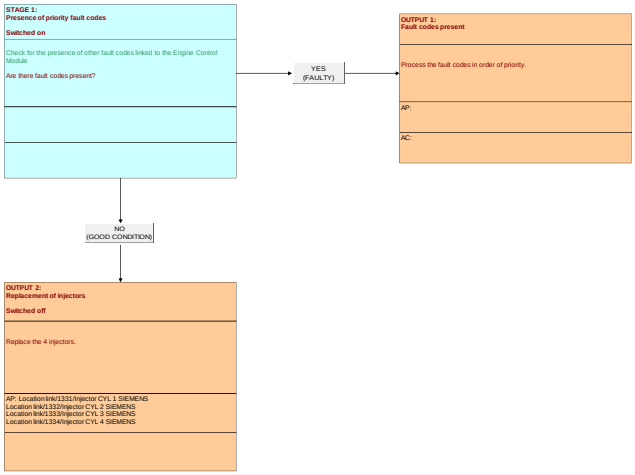

INFORMATION : FAULT CODE P1162 (ENGINE ECU)

SPECIAL FEATURE :

FOR : 1CB7 - B0FBM : DV6C TURBO DIESEL

FOR : 1CX7 - B0FBM : DV6C TURBO DIESEL

FOR : 1C58 - B0FBM : DV6C TURBO DIESEL

FOR : 1PT7 - B0FBM : DV6C TURBO DIESEL

FOR : 1PW2 - B0FBM : DV6C TURBO DIESEL

FOR : 1CB8 - B0FBM : DV6C TURBO DIESEL

FOR : 1CXA - B0FBM : DV6C TURBO DIESEL

FOR : 1CYA - B0FBM : DV6C TURBO DIESEL

FOR : 1PTB - B0FBM : DV6C TURBO DIESEL

FOR : 1PTC - B0FBM : DV6C TURBO DIESEL

FOR : 1PIA - B0FBM : DV6C TURBO DIESEL

FOR : 1CMJ - B0FBM : DV6C TURBO DIESEL

FOR : 1PMJ - B0FBM : DV6C TURBO DIESEL

Engine ECU CONTINENTAL SID 807 branch 2	
Fault code	P1162
After sales description of the fault code	EGR valve : Valve detected as being jammed open during the ECU sleep phase
Description of the diagnostics	EGR valve stuck in the high position detected by the impossibility of reaching 3 % in 0,5 s
Conditions of activation of the diagnostics	Just after switching off the engine, without restarting within 1 min
Conditions of disappearance of the fault	Start the engine and let it run for 4 min, then stop the engine and wait for the engine ECU to go into sleep phase for 1 min
Down-grade modes if fault present	-
Switching on of the warning lamp and/or warning message	-

Main customer complaints likely	Starting problem
	Jerking/stalling
	Lack of power
Suspect areas	Exhaust gas recycling valve
	Electrical harness
	Connectors

Fault code(s): P0489 or P12B3 or P1162

Reminder DTC

Do not do all this section for the FLOW CHART phase

DTC no.	Aftersales text of the DTC	Fault type	Conditions for fault finding	Downgraded mode after a fault is memorised	Driver Warning Light	Suspected areas Major control loops	The client effect(s)/symptom(s) associated with the DTCs	Fault code(s) to be dealt with before working through this flow chart	Tools required
P0489	EGR valve: Incorrect position (too open)	A							
P12B3	EGR valve: Incorrect position (too open) (aftersales)	A							
P1162	EGR valve: Blocked open	A							

PRE-CHECK
FLOW CHART Test procedure

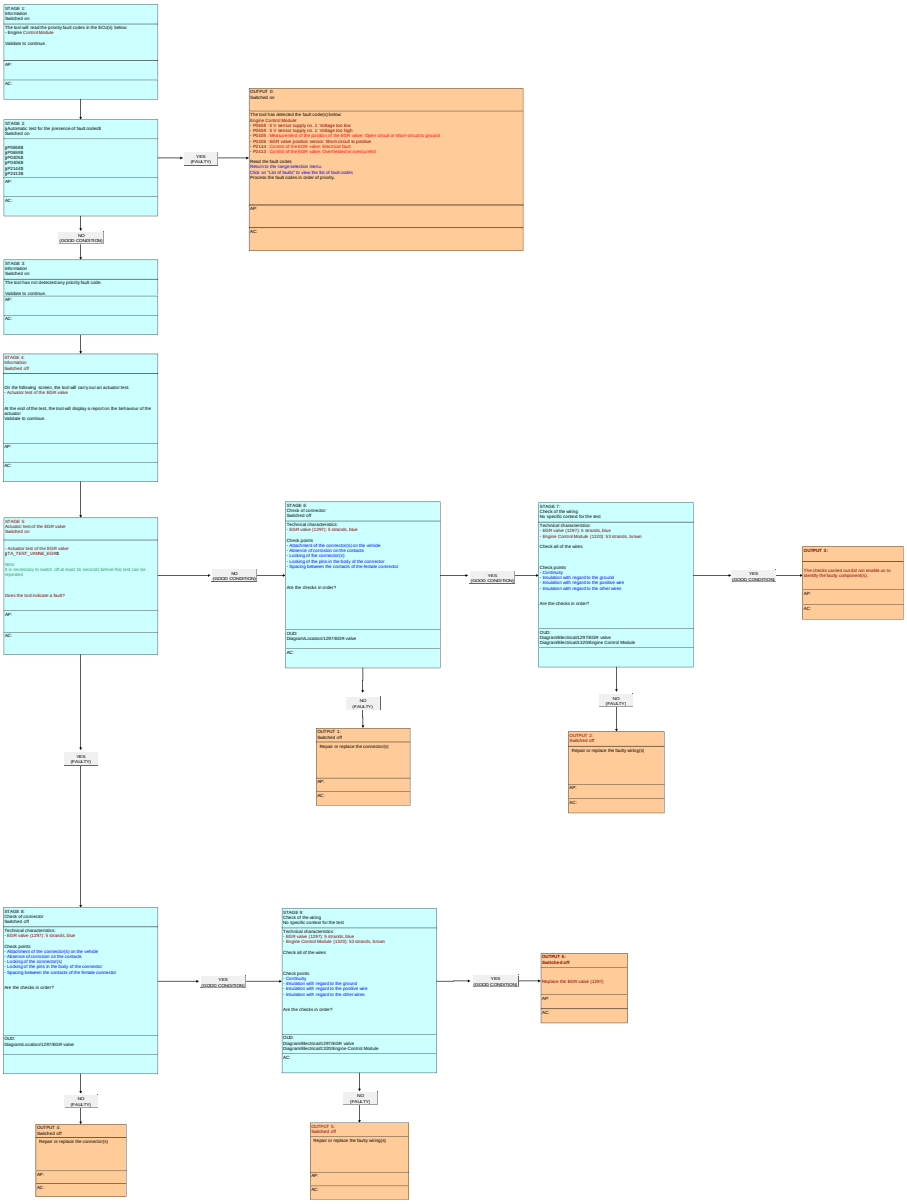

INFORMATION : FAULT CODE P1166 (ENGINE ECU)

SPECIAL FEATURE :

FOR : 1CMJ - B0FBM : DV6C TURBO DIESEL

FOR : 1PMJ - B0FBM : DV6C TURBO DIESEL

Engine ECU CONTINENTAL SID 807 branch 2	
Fault code	P1166
After sales description of the fault code	Fuel circuit : Maximum rail pressure exceeded
Description of the diagnostics	After the appearance of the fault of the exceeding of maximum pressure in the fuel high pressure rail, fault confirmed for 48 min causing a stopping of the engine
Conditions of activation of the diagnostics	At least one of the following conditions must be fulfilled - Ignition switched on - engine running
Conditions of disappearance of the fault	Driving for 5 minutes with several full load accelerations for 10 seconds
Down-grade modes if fault present	Cutting of fuel injector 1
	Cutting of fuel injector 2
	Cutting of fuel injector 3
	Cutting of fuel injector 4
	Closing of the fuel flow regulation valve
Switching on of the warning lamp and/or warning message	Warning lamp MIL
Main customer complaints likely	Jerking/stalling
	Lack of power
	Starting problem
	Cutting of the vehicle speed limiter
	Cutting of cruise control
	Engine acceleration at wrong time
	Noise
	Smoke from the exhaust
Suspect areas	Air leak on the fuel filter
	Air leak on the low pressure fuel supply circuit
	Fuel high pressure flow regulator
	Pressure sensor on the fuel high-pressure injection rail
	Fuel injectors
	Electrical harnesses
	Connectors

Fault code(s): P0088 or P1166 or P1294 or P1176

Reminder DTC

Do not fill in this section for the FLOW CHART phase

DTC no.	Alternates text of the DTC	Hard type	Conditions for fault finding	Downgraded mode after a fault is ascertained	Is the fault lamp on?	Suspected areas Major control steps	The client eTR+EX(Symptom(s) associated with the DTCs	Fault code(s) to be dealt with before working through this flow chart	Tools required
P0088	Fuel circuit / Control of the flow regulator: Pressure measured in the injection rail higher than setpoint	A							
P1166	Fuel circuit: Maximum rail pressure exceeded	B							
P1294	Fuel circuit: Maximum rail pressure exceeded at times	B							
P1176	Fuel flow regulator: blocked	A							

PRE-CHECK
FLOW CHART Test procedure

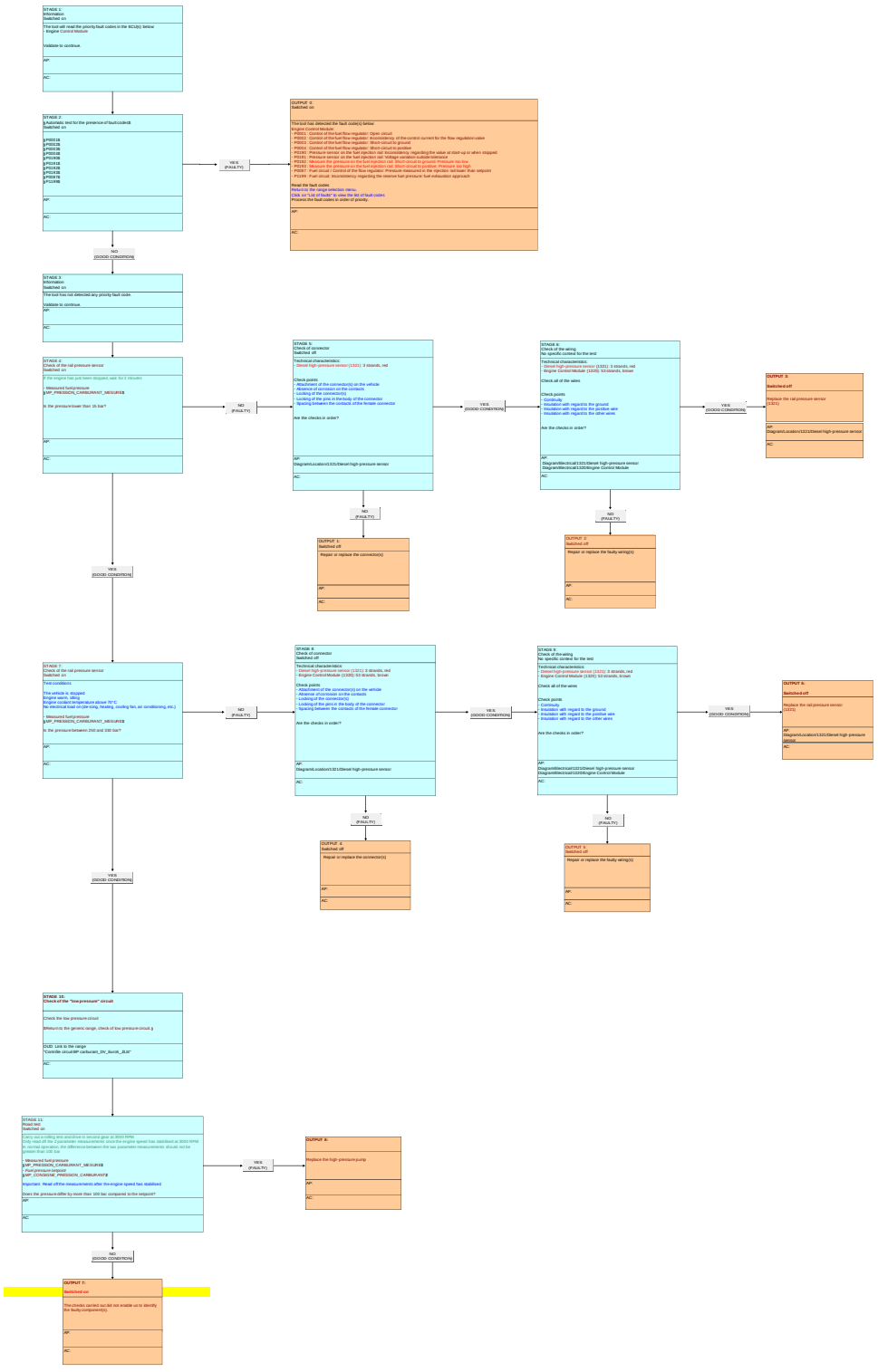

INFORMATION : FAULT CODE P1176 (ENGINE MANAGEMENT ECU)

SPECIAL FEATURE :

FOR : 1CB7 - B0FBM : DV6C TURBO DIESEL

FOR : 1CX7 - B0FBM : DV6C TURBO DIESEL

FOR : 1C58 - B0FBM : DV6C TURBO DIESEL

FOR : 1PT7 - B0FBM : DV6C TURBO DIESEL

FOR : 1PW2 - B0FBM : DV6C TURBO DIESEL

FOR : 1CB8 - B0FBM : DV6C TURBO DIESEL

FOR : 1CXA - B0FBM : DV6C TURBO DIESEL

FOR : 1CYA - B0FBM : DV6C TURBO DIESEL

FOR : 1PTB - B0FBM : DV6C TURBO DIESEL

FOR : 1PTC - B0FBM : DV6C TURBO DIESEL

FOR : 1PIA - B0FBM : DV6C TURBO DIESEL

FOR : 1CMJ - B0FBM : DV6C TURBO DIESEL

FOR : 1PMJ - B0FBM : DV6C TURBO DIESEL

Engine ECU CONTINENTAL SID 807 branch 2	
Fault code	P1176
After sales description of the fault code	Fuel circuit : Pressure measured in the injection rail higher than the reference with the flow regulator stuck (Anti-sticking test)
Description of the diagnostics	The pressure measured is above the reference by more than 9 % (Fuel flow regulator detected stuck after the test)
Conditions of activation of the diagnostics	engine running
Conditions of disappearance of the fault	Driving for 5 minutes with several full load accelerations for 10 seconds followed by releases of the pedal
Down-grade modes if fault present	-
Switching on of the warning lamp and/or warning message	-

Main customer complaints likely	Jerking/stalling
	Engine acceleration at wrong time
	Noise
	Starting problem
	Smoke from the exhaust
	Lack of power
Suspect areas	Fuel high pressure flow regulator
	Electrical harnesses
	Connectors

Fault code(s): P0088 or P1166 or P1294 or P1176

Reminder DTC

Do not fill in this section for the FLOW CHART phase

DTC no.	Alternates text of the DTC	Hard type	Conditions for fault finding	Downgraded mode after a fault is ascertained	Customer warning lamp	Suspected areas Major control steps	The client effect(s)/symptom(s) associated with the DTC(s)	Fault code(s) to be dealt with before working through this flow chart	Tools required
P0088	Fuel circuit / Control of the flow regulator: Pressure measured in the injection rail higher than setpoint	A							
P1166	Fuel circuit: Maximum rail pressure exceeded	B							
P1294	Fuel circuit: Maximum rail pressure exceeded at times	A							
P1176	Fuel flow regulator: blocked	A							

PRE-CHECK
FLOW CHART Test procedure

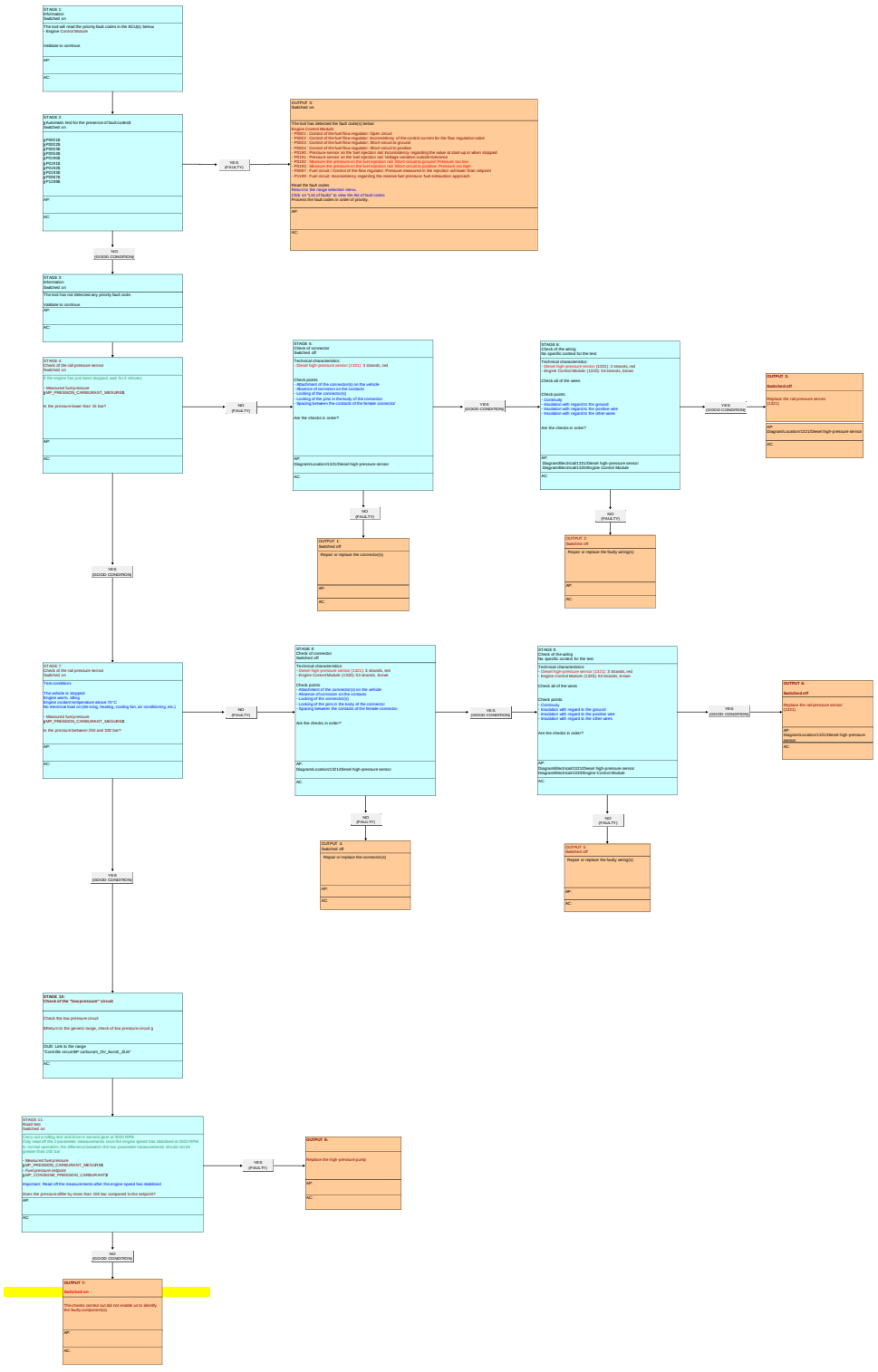

INFORMATION : FAULT CODE P1192 (ENGINE ECU)

SPECIAL FEATURE :

FOR : 1CMJ - B0FBM : DV6C TURBO DIESEL

FOR : 1PMJ - B0FBM : DV6C TURBO DIESEL

Engine ECU CONTINENTAL SID 807 branch 2	
Fault code	P1192
After sales description of the fault code	Computer : Stopping of the engine by high pressure pump supply cut-off fault
Description of the diagnostics	Engine speed detected too high following an engine stopping request (due to a hydraulic fault)
Conditions of activation of the diagnostics	Sleeping of networks (During the engine ECU sleep phase)
Conditions of disappearance of the fault	Driving for 5 minutes
Down-grade modes if fault present	Cutting of fuel injector 1
	Cutting of fuel injector 2
	Cutting of fuel injector 3
	Cutting of fuel injector 4
	Closing of the fuel flow regulation valve
Switching on of the warning lamp and/or warning message	"SERVICE" warning lamp
Main customer complaints likely	Noise
	Jerking/stalling
	Starting problem
	Malfunctioning of the idle
	Smoke from the exhaust
	Lack of power
	Engine acceleration at wrong time
Suspect areas	Fuel high pressure flow regulator
	Electrical harnesses
	Connectors

Fault code(s): P1192

Reminder DTC

Do not fill in this section for the FLOW CHART phase

DTC no.	Aftersales text of the DTC	Fault type	Conditions for fault finding	Downgraded mode after a fault is ascertained	Does it all on dif w warning light	Suspected areas Major control steps	The client effect(s)/symptom(s) associated with the DTCs	Fault code(s) to be dealt with before working through this flow chart	Tools required
P1192	Monitoring during engine stop: System fault in rail pressure when stopped	B							
					SERVICE				

PRE-CHECK

FLOW CHART Test procedure

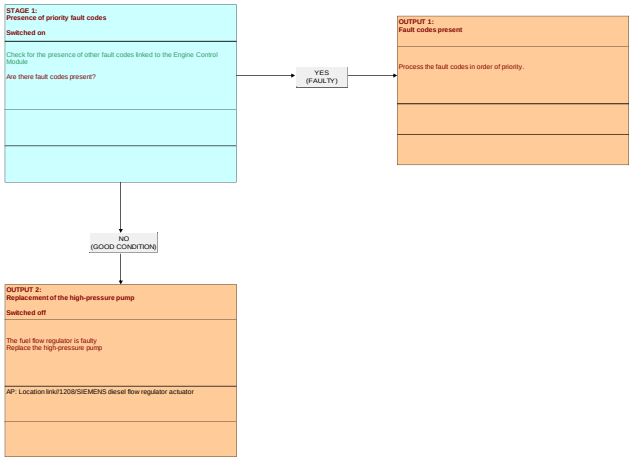

INFORMATION : FAULT CODE P1199 (ENGINE ECU)

SPECIAL FEATURE :

FOR : 1CB7 - B0FBM : DV6C TURBO DIESEL

FOR : 1CX7 - B0FBM : DV6C TURBO DIESEL

FOR : 1C58 - B0FBM : DV6C TURBO DIESEL

FOR : 1PT7 - B0FBM : DV6C TURBO DIESEL

FOR : 1PW2 - B0FBM : DV6C TURBO DIESEL

FOR : 1CB8 - B0FBM : DV6C TURBO DIESEL

FOR : 1CXA - B0FBM : DV6C TURBO DIESEL

FOR : 1CYA - B0FBM : DV6C TURBO DIESEL

FOR : 1PTB - B0FBM : DV6C TURBO DIESEL

FOR : 1PTC - B0FBM : DV6C TURBO DIESEL

FOR : 1PIA - B0FBM : DV6C TURBO DIESEL

FOR : 1CMJ - B0FBM : DV6C TURBO DIESEL

FOR : 1PMJ - B0FBM : DV6C TURBO DIESEL

Engine ECU CONTINENTAL SID 807 branch 2	
Fault code	P1199
After sales description of the fault code	Fuel circuit : Incoherence on the reserve fuel pressure (Nearing no fuel)
Description of the diagnostics	Pressure measured in the fuel high pressure common injection rail more than 9% lower than the reference value for 1200 ms
Conditions of activation of the diagnostics	engine running
Conditions of disappearance of the fault	Driving for 5 minutes
Down-grade modes if fault present	-
Switching on of the warning lamp and/or warning	-

message	
Main customer complaints likely	Jerking/stalling
	Lack of power
	Starting problem
	Absence of automatic stopping of the internal combustion engine (If the vehicle has the Stop and Start system)
Suspect areas	Running out of fuel
	Clogging of the fuel filter
	Leak in fuel circuit (low pressure)

Fault code(s): P1199

Reminder DTC

Do not fill in this section for the FLOW CHART phase

DTC no.	Aftersales text of the DTC	Fault type	Conditions for fault fixing	Downgraded mode after a fault is ascertained	Warning lamp(s) to be activated	Suspected areas Major control loops	The client effect(s)/symptom(s) associated with the DTC(s)	Fault code(s) to be dealt with before working through this flow chart	Tools required
P1199	Fuel circuit: Inconsistency regarding the fuel pressure in the fuel tank: fuel exhaustion approach	C							

PRE-CHECK
FLOW CHART Test procedure

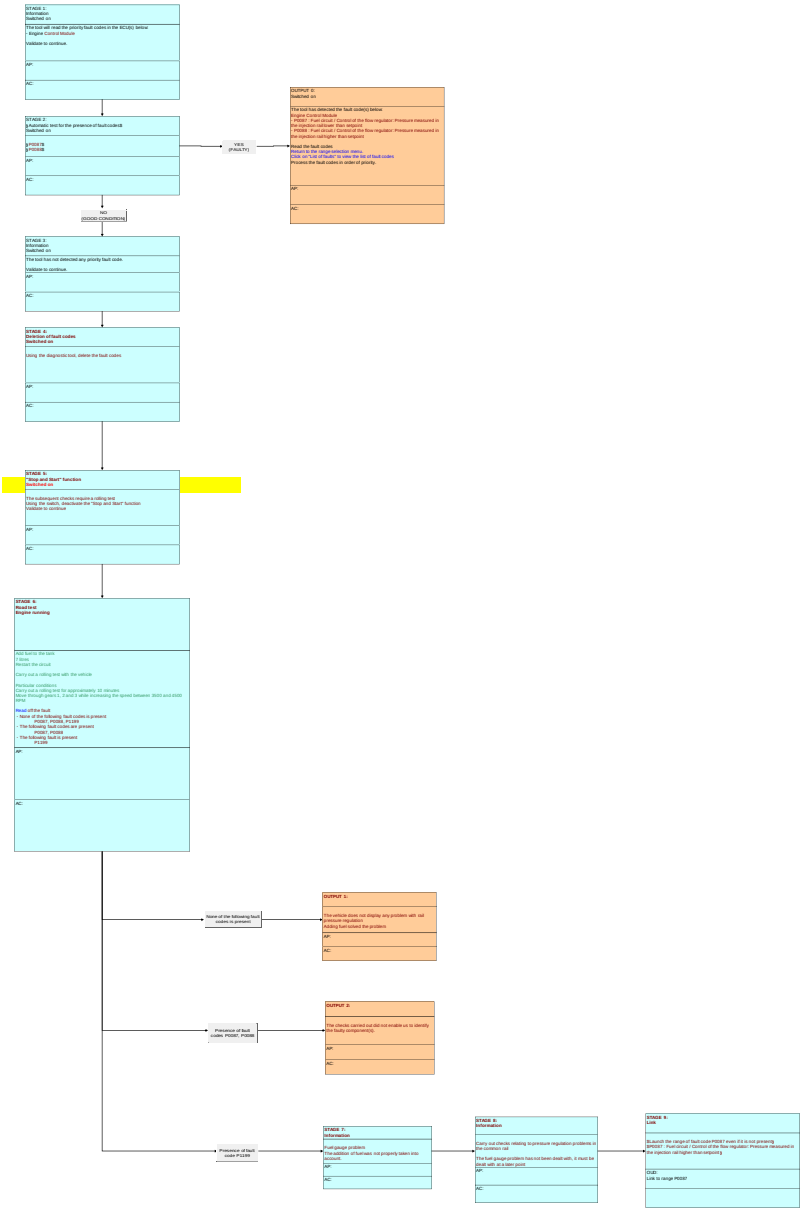

INFORMATION : FAULT CODE P11AA (ENGINE ECU)

SPECIAL FEATURE :

FOR : 1CMJ - B0FBM : DV6C TURBO DIESEL

FOR : 1PMJ - B0FBM : DV6C TURBO DIESEL

Engine ECU CONTINENTAL SID 807 branch 2	
Fault code	P11AA
After sales description of the fault code	Air circuit : Maximum turbo pressure exceeded
Description of the diagnostics	Incoherence between the position of the turbocharger electrovalve measured and the turbo air pressure measured, detected by the turbo pressure being above 2,95 bars for 3 seconds
Conditions of activation of the diagnostics	engine running
Conditions of disappearance of the fault	Driving for 5 minutes with several full load accelerations
Down-grade modes if fault present	Irreversible deactivation of the vehicle speed limiter
	Irreversible deactivation of the vehicle cruise control
	Deactivation of taking account of the tight spot information
	Switching of the turbocharging pressure regulation to controlled mode
	Switching to fuel "normal reduced flow" mode
	Deactivation of the request for regeneration of the particle filter from the diagnostic tool
	Sending of the information "torque uncertain" on the CAN network
Switching on of the warning lamp and/or warning message	"SERVICE" warning lamp
Main customer complaints likely	Noise
	Slightly higher fuel consumption
	Jerking/stalling
	Lack of power
Suspect areas	Manifold air entry pressure sensor
	turbocharger
	Turbocharger variable geometry control solenoid valve
	Turbocharger variable geometry position repeat sensor
	Electrical harnesses
	Connectors
	Clogging of the vacuum circuit

Fault code(s): P11AA

Remember DTC

Be sure you have selected the FLOW CHART phase

DTC code	Alternative text of the DTC	Fault Finding	Conditions for fault finding	Warning/potential event after a fault is ascertained	Fault Code Type	Suspected area (Major common steps	The client effects(Symptoms) (s) associated with the DTC(s)	Fault code(s) to be dealt with before working through this flow chart:	Tools required
P11AA	Steam air circuit: Steam pressure exceeds maximum threshold	A							

PRE-CHECK

FLOW CHART Test procedure

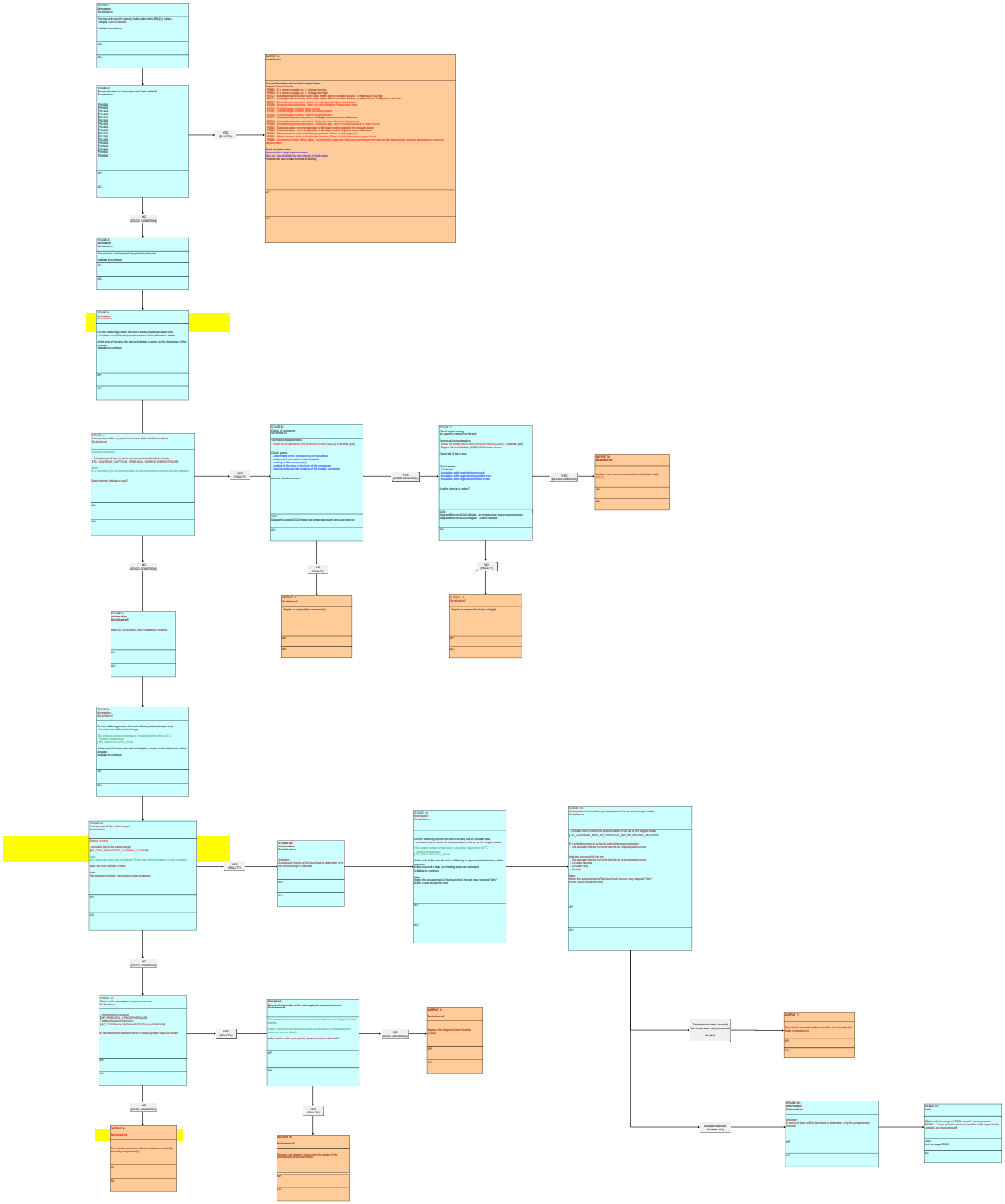

INFORMATION : FAULT CODE P11AB (ENGINE ECU)

SPECIAL FEATURE :

FOR : 1CB7 - B0FBM : DV6C TURBO DIESEL

FOR : 1CX7 - B0FBM : DV6C TURBO DIESEL

FOR : 1C58 - B0FBM : DV6C TURBO DIESEL

FOR : 1PT7 - B0FBM : DV6C TURBO DIESEL

FOR : 1PW2 - B0FBM : DV6C TURBO DIESEL

FOR : 1CB8 - B0FBM : DV6C TURBO DIESEL

FOR : 1CXA - B0FBM : DV6C TURBO DIESEL

FOR : 1CYA - B0FBM : DV6C TURBO DIESEL

FOR : 1PTB - B0FBM : DV6C TURBO DIESEL

FOR : 1PTC - B0FBM : DV6C TURBO DIESEL

FOR : 1PIA - B0FBM : DV6C TURBO DIESEL

FOR : 1CMJ - B0FBM : DV6C TURBO DIESEL

FOR : 1PMJ - B0FBM : DV6C TURBO DIESEL

Engine ECU CONTINENTAL SID 807 branch 2	
Fault code	P11AB
After sales description of the fault code	Air circuit : Turbocharging pressure below the maximum threshold
Description of the diagnostics	Possibility 1 : Incoherence between the measured position of the turbocharger electrovalve and the measured turbo air pressure, as detected by the turbo pressure being lower than 0,9 bars for 3 seconds at idle
	Possibility 2 : Incoherence between the measured position of the turbocharger electrovalve and the measured turbo air pressure, as detected by the turbo pressure being lower than 1,3 bars for 3 seconds under load
	These thresholds are weighted according to the atmospheric pressure
Conditions of activation of the diagnostics	engine running

Conditions of disappearance of the fault	Driving for 5 minutes with several full load accelerations
Down-grade modes if fault present	Closing of the EGR (exhaust gas recycling) valve
	Irreversible deactivation of the vehicle speed limiter
	Irreversible deactivation of the vehicle cruise control
	Deactivation of taking account of the tight spot information
	Switching of the turbocharging pressure regulation to controlled mode
	Switching to fuel "normal reduced flow" mode
	Deactivation of the request for regeneration of the particle filter from the diagnostic tool
	Sending of the information "torque uncertain" on the CAN network
Switching on of the warning lamp and/or warning message	Warning lamp MIL
	"SERVICE" warning lamp
Main customer complaints likely	Lack of power
	Smoke from the exhaust
	Noise
Suspect areas	Manifold air entry pressure sensor
	turbocharger
	Turbocharger variable geometry control solenoid valve
	Turbocharger variable geometry position repeat sensor
	Electrical harnesses
	Connectors
	Vacuum circuit leak

Fault code(s): P0299 or P11AB

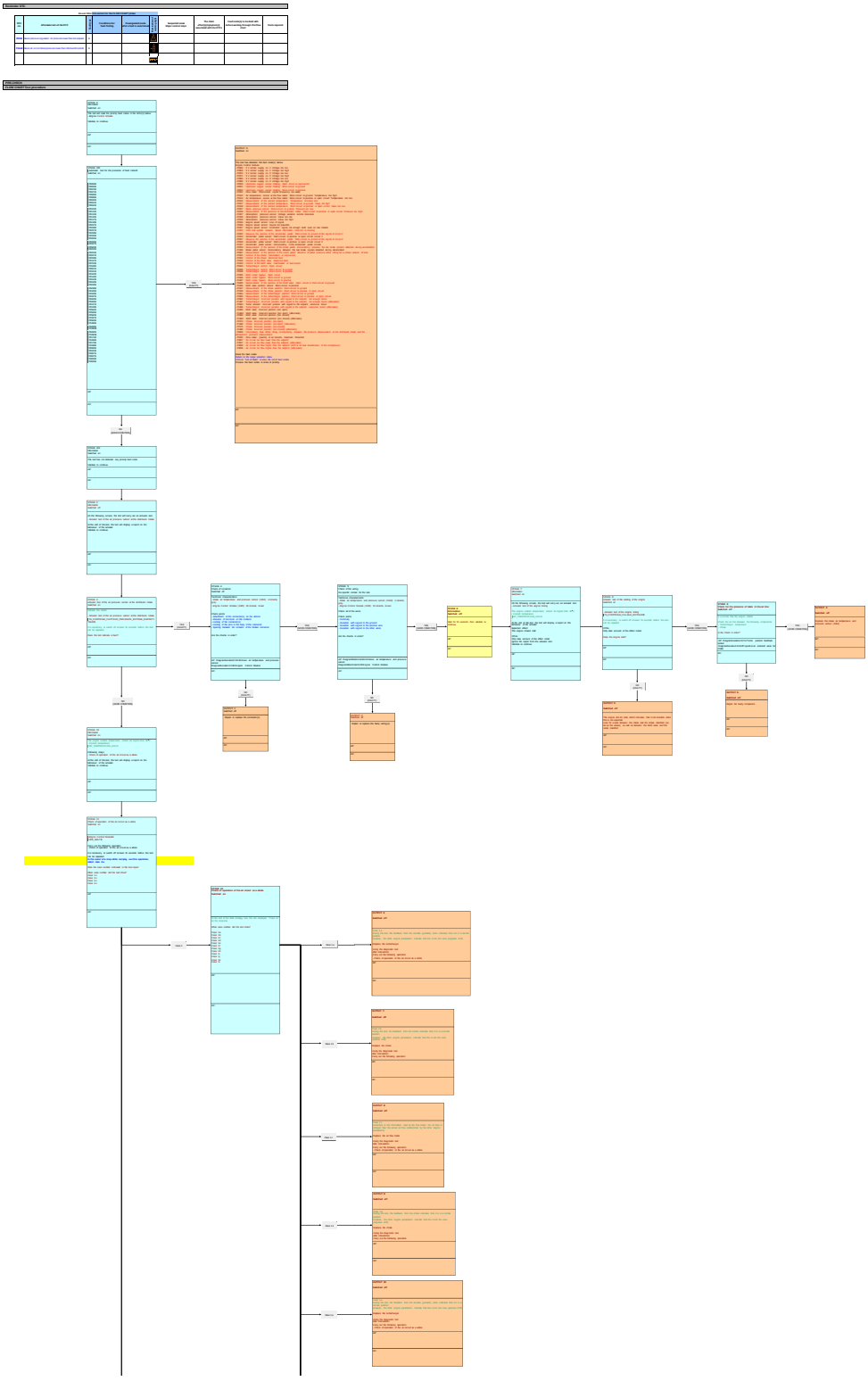

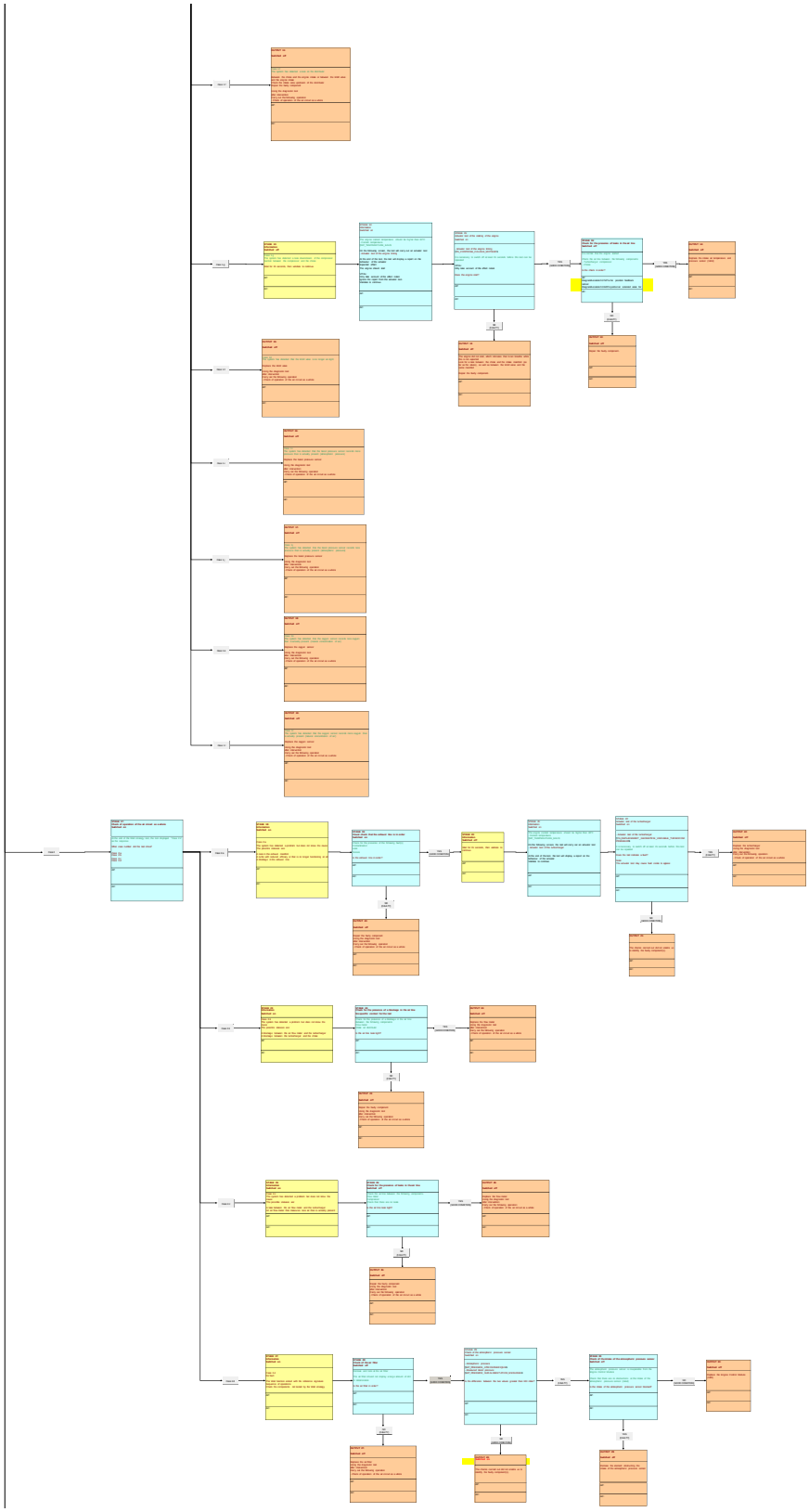

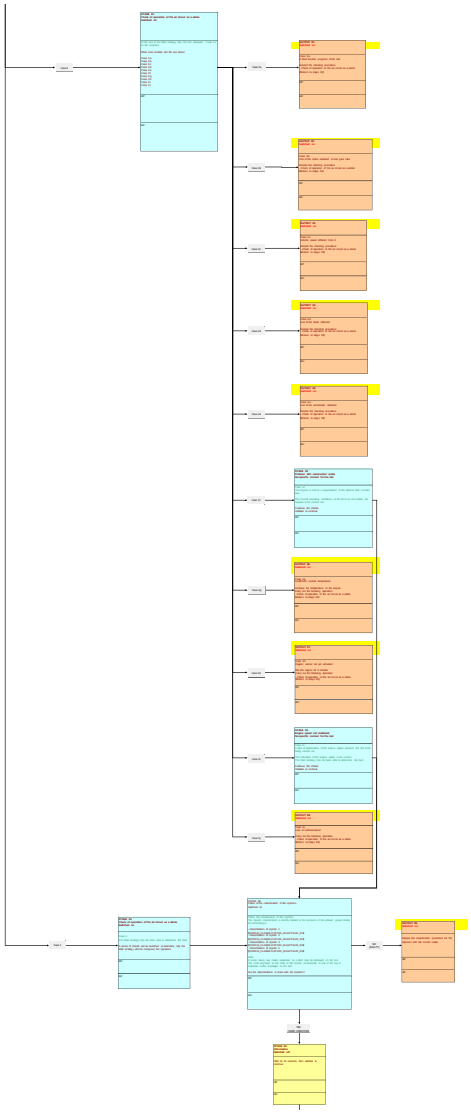

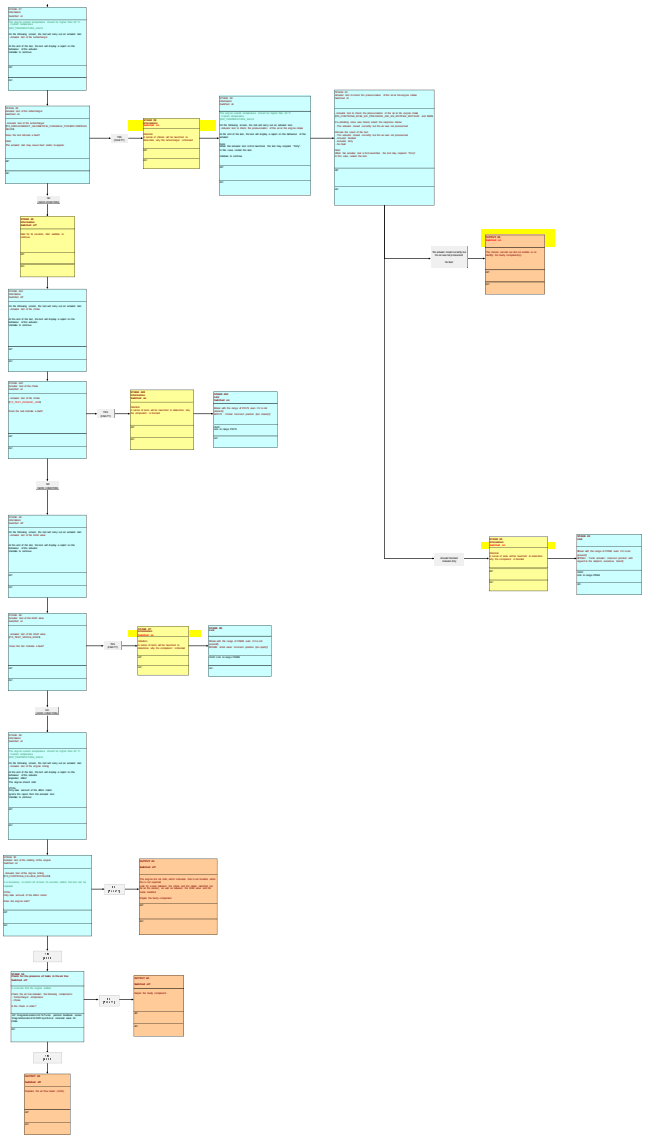

INFORMATION : FAULT CODE P1294 (ENGINE ECU)

SPECIAL FEATURE :

FOR : 1CMJ - B0FBM : DV6C TURBO DIESEL

FOR : 1PMJ - B0FBM : DV6C TURBO DIESEL

Engine ECU CONTINENTAL SID 807 branch 2	
Fault code	P1294
After sales description of the fault code	Fuel circuit : Critical maximum rail pressure exceeded at certain points
Description of the diagnostics	Pressure measured in the fuel high pressure common injection rail higher than 1700 bars for 1,2 s
Conditions of activation of the diagnostics	At least one of the following conditions must be fulfilled - Ignition switched on - Engine running
Conditions of disappearance of the fault	Driving for 5 minutes with several full load accelerations for 10 seconds
Down-grade modes if fault present	Closing of the EGR (exhaust gas recycling) valve
	Irreversible deactivation of the vehicle speed limiter
	Irreversible deactivation of the vehicle cruise control
	Deactivation of taking account of the tight spot information
	Switching of the turbocharging pressure regulation to controlled mode
	Engine speed limited to 2000 rpm
	Sending of the information "torque uncertain" on the CAN network
	Function for limitation of the static torque for the protection of the gearbox
Switching on of the warning lamp and/or warning message	Warning lamp MIL
Main customer complaints likely	Jerking/stalling
	Lack of power
	Starting problem
	Cutting of the vehicle speed limiter
	Cutting of cruise control
	Engine acceleration at wrong time
	Noise
	Smoke from the exhaust
	Absence of automatic stopping of the internal combustion engine (If the vehicle has the Stop and Start system)
	Air leak on the fuel filter

Suspect areas	Air leak on the low pressure fuel supply circuit
	Fuel high pressure flow regulator
	Pressure sensor on the fuel high-pressure injection rail
	Fuel injectors
	Electrical harnesses
	Connectors

Fault code(s): P0088 or P1166 or P1294 or P1176

Reminder DTC

Do not fill in this section for the FLOW CHART phase

DTC no.	Alternates text of the DTC	Hard type	Conditions for fault finding	Downgraded mode after a fault is ascertained	Customer warning lamp	Suspected areas Major control steps	The client eTR+EX(Symptom(s) associated with the DTCs)	Fault code(s) to be dealt with before working through this flow chart	Tools required
P0088	Fuel circuit / Control of the flow regulator: Pressure measured in the injection rail higher than setpoint	A							
P1166	Fuel circuit: Maximum rail pressure exceeded	B							
P1294	Fuel circuit: Maximum rail pressure exceeded at times	B							
P1176	Fuel flow regulator: blocked	A							

PRE-CHECK
FLOW CHART Test procedure

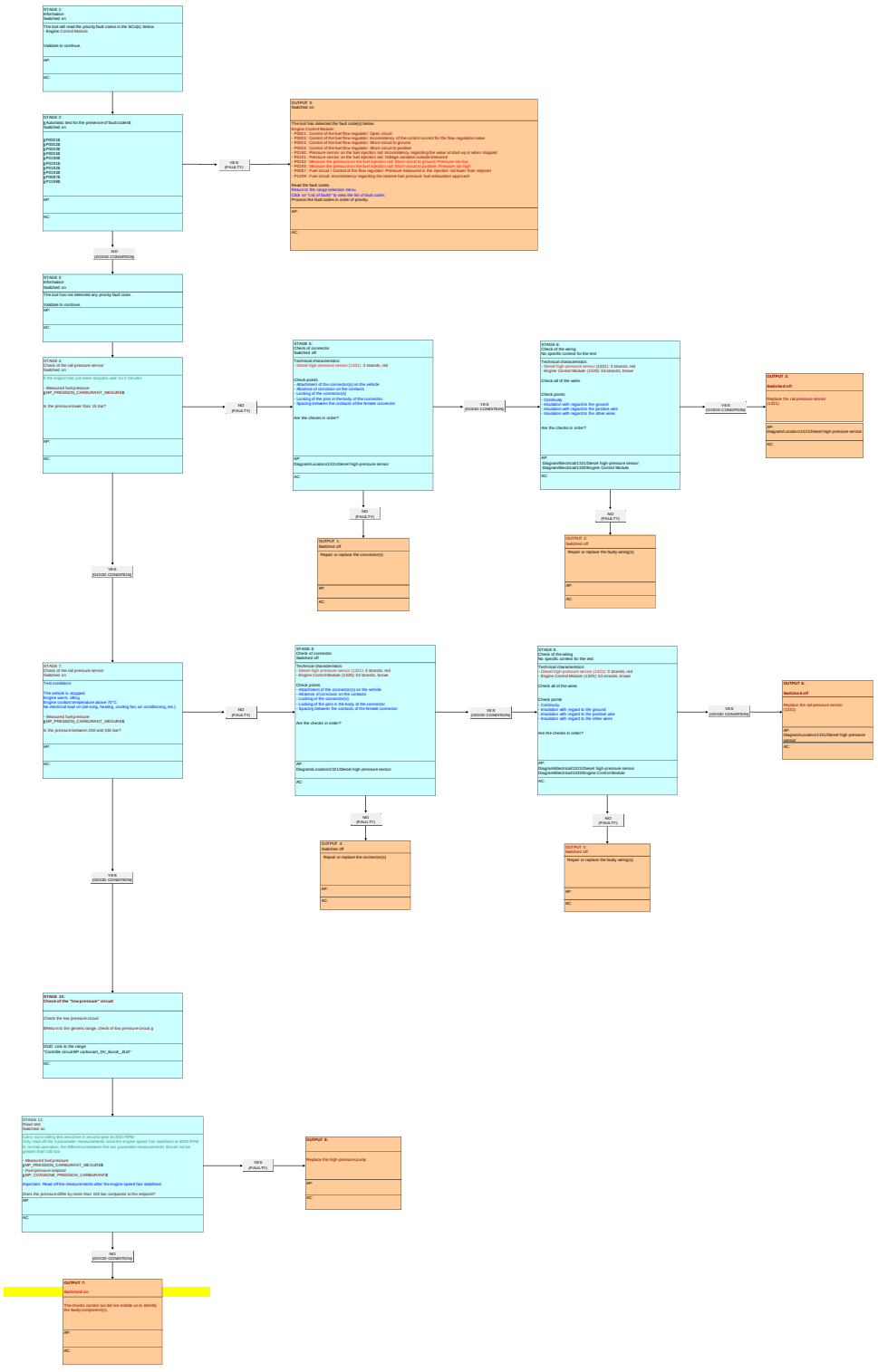

INFORMATION : FAULT CODE P12A1 (ENGINE ECU)

SPECIAL FEATURE :

FOR : 1CB7 - B0FBM : DV6C TURBO DIESEL

FOR : 1CX7 - B0FBM : DV6C TURBO DIESEL

FOR : 1C58 - B0FBM : DV6C TURBO DIESEL

FOR : 1PT7 - B0FBM : DV6C TURBO DIESEL

FOR : 1PW2 - B0FBM : DV6C TURBO DIESEL

FOR : 1CB8 - B0FBM : DV6C TURBO DIESEL

FOR : 1CXA - B0FBM : DV6C TURBO DIESEL

FOR : 1CYA - B0FBM : DV6C TURBO DIESEL

FOR : 1PTB - B0FBM : DV6C TURBO DIESEL

FOR : 1PTC - B0FBM : DV6C TURBO DIESEL

FOR : 1PIA - B0FBM : DV6C TURBO DIESEL

FOR : 1CMJ - B0FBM : DV6C TURBO DIESEL

FOR : 1PMJ - B0FBM : DV6C TURBO DIESEL

Engine ECU CONTINENTAL SID 807 branch 2	
Fault code	P12A1
After sales description of the fault code	No. 1 cylinder : Injector injects too much or remains jammed in the open position
Description of the diagnostics	The correction made to the fuel flow drift of injector 1 is higher than the maximum threshold
Conditions of activation of the diagnostics	At least one of the following conditions must be fulfilled - Ignition switched on - Engine running
Conditions of disappearance of the fault	Driving for 5 minutes
	Closing of the EGR (exhaust gas recycling) valve
	Reversible deactivation of the vehicle speed limiter
	Reversible deactivation of the vehicle cruise control
	Deactivation of taking account of the tight spot

Down-grade modes if fault present	information
	Switching of the turbocharging pressure regulation to controlled mode
	Cutting of fuel injector 1
	Switching to fuel "normal reduced flow" mode
	Deactivation of the request for regeneration of the particle filter from the diagnostic tool
	Deactivation of the "easy-move" (electric parking brake) functionality
	Function for limitation of the static torque for the protection of the gearbox
Switching on of the warning lamp and/or warning message	Warning lamp MIL
	"SERVICE" warning lamp
Main customer complaints likely	Jerking/stalling
	Engine acceleration at wrong time
	Noise
	Slightly higher fuel consumption
	Starting problem
	Smoke from the exhaust
	Lack of power
Suspect areas	Fuel injector 1
	Injector classification
	Fuel return

Fault code(s): P12A1 or P12A4 or P12A7 or P12AA

Reminder DTC

DTC no.	Alternative text of the DTC	Do not fill in this section for the FLOW CHART phase: Fault found	Conditions for fault finding	Discriminated mode after a fault is memorised	Driver warning light	Suspected areas Major control steps	The client offers(OR)/proposes(X) associated with the DTCs	Fault code(s) to be dealt with before working through this flow chart	Tools required
P12A1	Injector 1: injector injecting too much or injected blocked open. (Engine Mixer)								
P12A4	Injector 2: injector injecting too much or injected blocked open. (Engine Mixer)								
P12A7	Injector 3: injector injecting too much or injected blocked open. (Engine Mixer)								
P12AA	Injector 4: injector injecting too much or injected blocked open. (Engine Mixer)								

PRE-CHECK

FLOW CHART Test procedure

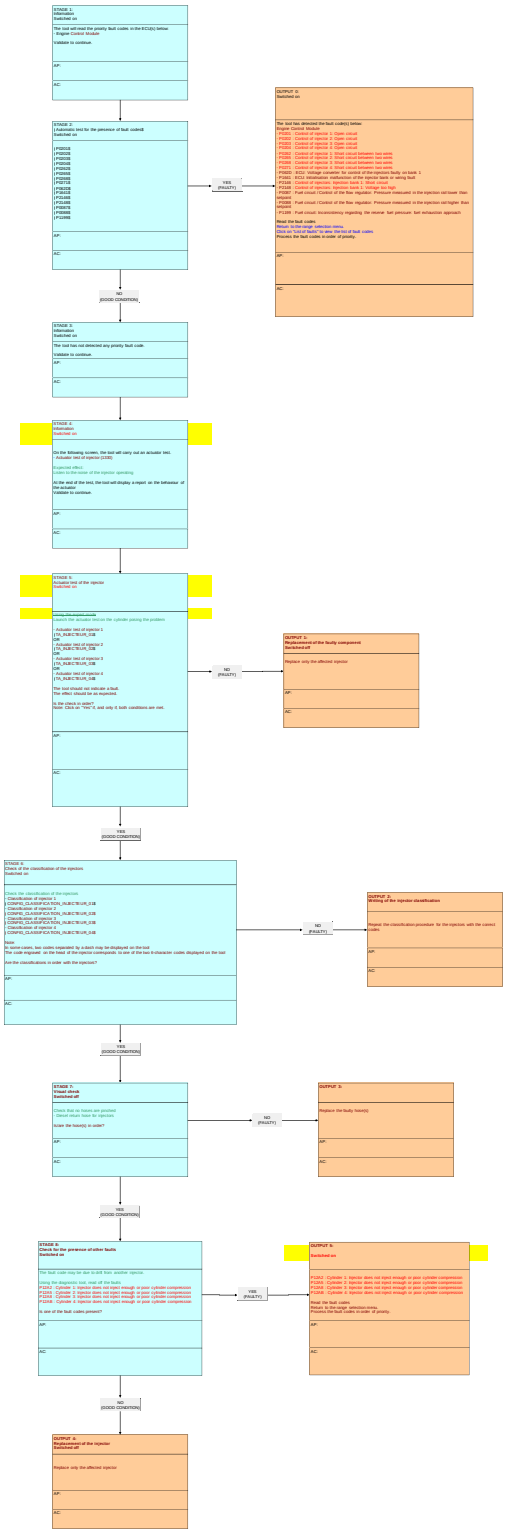

INFORMATION : FAULT CODE P12A2 (ENGINE ECU)

SPECIAL FEATURE :

FOR : 1CMJ - B0FBM : DV6C TURBO DIESEL

FOR : 1PMJ - B0FBM : DV6C TURBO DIESEL

Engine ECU CONTINENTAL SID 807 branch 2	
Fault code	P12A2
After sales description of the fault code	No. 1 cylinder : Injector not injecting enough, or poor cylinder compression
Description of the diagnostics	The correction made to the fuel flow drift of injector 1 is below the minimum threshold
Conditions of activation of the diagnostics	Engine running at idle
Conditions of disappearance of the fault	Driving for 5 minutes
Down-grade modes if fault present	Closing of the EGR (exhaust gas recycling) valve
	Reversible deactivation of the vehicle speed limiter
	Reversible deactivation of the vehicle cruise control
	Deactivation of taking account of the tight spot information
	Switching of the turbocharging pressure regulation to controlled mode
	Deactivation of the request for regeneration of the particle filter from the diagnostic tool
	Deactivation of the "easy-move" (electric parking brake) functionality
	Function for limitation of the static torque for the protection of the gearbox
Switching on of the warning lamp and/or warning message	Warning lamp MIL
Main customer complaints likely	Jerking/stalling
	Engine acceleration at wrong time
	Noise
	Slightly higher fuel consumption
	Starting problem
	Smoke from the exhaust
	Lack of power
	Malfunctioning of the idle
	Absence of automatic stopping of the internal combustion engine (Vehicle equipped with "stop and start")
	Problem with automatic restarting of the internal combustion engine (Vehicle equipped with "stop and

	start")
Suspect areas	Fuel injector 1
	Poor quality of the fuel or type of fuel
	Fuel return
	Inlet valve - Exhaust valve - spring - seal
	Piston - Segment - Shaft - Cooling system
	Conrods

Fault code(s): P12A2 or P12A5 or P12A8 or P12AB

Reminder DTC

Do not fill in this section for the FLOW CHART phase

DTC Key	Alternative text of the DTC	Fault code	Conditions for fault finding	Damaged parts made after a fault is ascertained	Warning light on / not on / flashing	Suspected areas Major control steps	The client effect(s) (symptom(s)) associated with the DTCs	Fault code(s) to be dealt with before working through this flow chart	Tools required
P12A2	Injector 1: Injector does not inject enough or poor cylinder compression								
P12A5	Injector 2: Injector does not inject enough or poor cylinder compression								
P12A8	Injector 3: Injector does not inject enough or poor cylinder compression								
P12AB	Injector 4: Injector does not inject enough or poor cylinder compression								

PRE-CHECK

FLOW CHART Test procedure

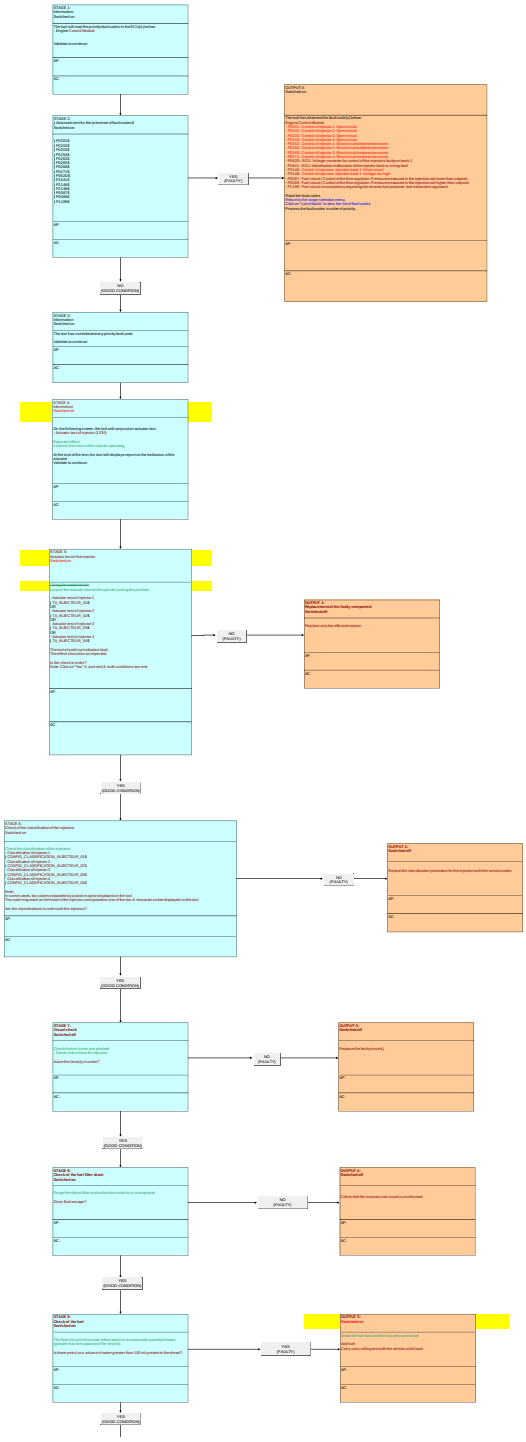

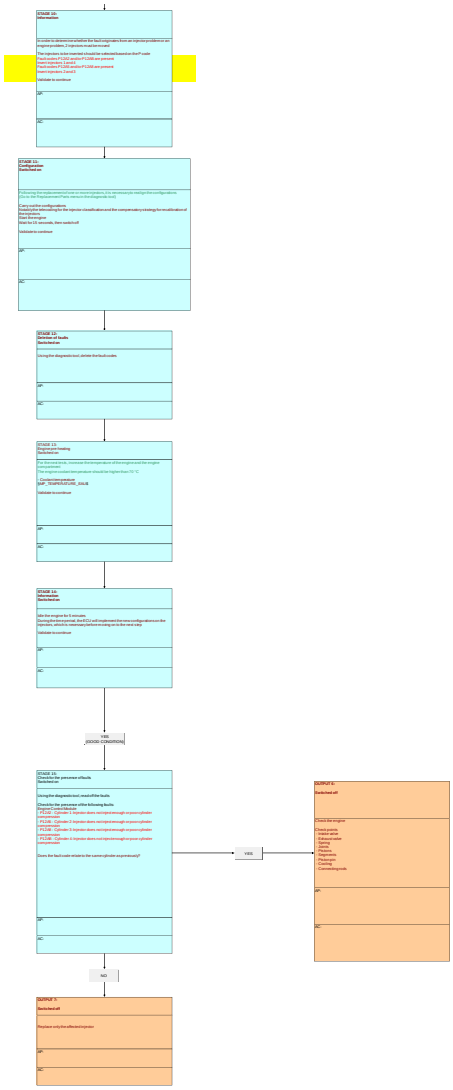
STAGE 10:
Information
In order to determine whether the fault originates from an injection problem or an engine problem, 2 injectors must be moved
The injectors to be inserted should be selected based on the P code
Fault codes P1126 and/or P1268 are present
Fault codes P1127 and/or P1269 are present
Fault codes P1128 and/or P1270 are present
Insert injectors 3 and 5
Validate to continue
AP:
AC:
STAGE 11:
Configuration
Switched on
Following the replacement of one or more injectors, it is necessary to realign the configurations. Go to the Replacement Parts menu in the diagnostic tool)
Carry out the configurations
Wait for the end of coding for the injector classification and the compensatory cranking for recalibration of the injectors
Start the engine
Wait for 15 seconds, then switch off
Ivalidate to continue
AP:
AC:
STAGE 12:
Clearing of fault
Switched on
Using the diagnostic tool, delete the fault codes
AP:
AC:
STAGE 13:
Engine cooling
Switched on
For the next step, reverse the temperature of the engine and the engine compartment
The engine coolant temperature should be higher than 70 °C
Correct temperature
ENP_TEMPERATURE_VALID
Validate to continue
AP:
AC:
STAGE 14:
Information
Switched on
Idle the engine for 5 minutes
During the time period, the ECU will implement the new configuration on the injectors, which is necessary before moving on to the next step
Validate to continue
AP:
AC:
YES
(GOOD CONDITION)
STAGE 15:
Check for presence of faults
Switched on
Using the diagnostic tool, read out the faults
Check for the presence of the following faults:
Engine Control Module
- P1126 - Cylinder 1: Injector does not inject enough or poor cylinder compensation
- P1128 - Cylinder 2: Injector does not inject enough or poor cylinder compensation
- P1268 - Cylinder 3: Injector does not inject enough or poor cylinder compensation
- P1270 - Cylinder 4: Injector does not inject enough or poor cylinder compensation
Does the fault code relate to the same cylinder as previously?
AP:
AC:
YES
OUTPUT 6:
Switched off
Check the engine
Check points
- Air supply
- Exhaust outlet
- Valves
- Camshaft
- Pistons
- Connecting rods
- Piston rod
- Cooling
- Connecting rods
AP:
AC:
NO
OUTPUT 7:
Switched off
Replace only the affected injector
AP:
AC:

INFORMATION : FAULT CODE P12A4 (ENGINE MANAGEMENT ECU)

SPECIAL FEATURE :

FOR : 1CB7 - B0FBM : DV6C TURBO DIESEL

FOR : 1CX7 - B0FBM : DV6C TURBO DIESEL

FOR : 1C58 - B0FBM : DV6C TURBO DIESEL

FOR : 1PT7 - B0FBM : DV6C TURBO DIESEL

FOR : 1PW2 - B0FBM : DV6C TURBO DIESEL

FOR : 1CB8 - B0FBM : DV6C TURBO DIESEL

FOR : 1CXA - B0FBM : DV6C TURBO DIESEL

FOR : 1CYA - B0FBM : DV6C TURBO DIESEL

FOR : 1PTB - B0FBM : DV6C TURBO DIESEL

FOR : 1PTC - B0FBM : DV6C TURBO DIESEL

FOR : 1PIA - B0FBM : DV6C TURBO DIESEL

FOR : 1CMJ - B0FBM : DV6C TURBO DIESEL

FOR : 1PMJ - B0FBM : DV6C TURBO DIESEL

Engine ECU CONTINENTAL SID 807 branch 2	
Fault code	P12A4
After sales description of the fault code	No. 2 cylinder : Injector injects too much or remains jammed in the open position
Description of the diagnostics	The correction made to the fuel flow drift of injector 2 is higher than the maximum threshold
Conditions of activation of the diagnostics	At least one of the following conditions must be fulfilled - Ignition switched on - engine running
Conditions of disappearance of the fault	Driving for 5 minutes
	Closing of the EGR (exhaust gas recycling) valve
	Reversible deactivation of the vehicle speed limiter
	Reversible deactivation of the vehicle cruise control
	Deactivation of the "easy-move" (electric parking brake)

Down-grade modes if fault present	functionality
	Function for limitation of the static torque for the protection of the gearbox
	Deactivation of taking account of the tight spot information
	Switching of the turbocharging pressure regulation to controlled mode
	Cutting of fuel injector 2
	Switching to fuel "normal reduced flow" mode
	Deactivation of the request for regeneration of the particle filter from the diagnostic tool
Switching on of the warning lamp and/or warning message	Warning lamp MIL
	"SERVICE" warning lamp
Main customer complaints likely	Jerking/stalling
	Engine acceleration at wrong time
	Noise
	Slightly higher fuel consumption
	Starting problem
	Smoke from the exhaust
	Lack of power
Suspect areas	Fuel injector 2
	Injector classification
	Fuel return

Fault code(s): P12A1 or P12A4 or P12A7 or P12AA

Reminder DTC

DTC no.	Alternative text of the DTC	Do not fill in this section for the FLOW CHART phase: Fully tested	Conditions for fault finding	Discriminated mode after a fault is memorised	Lamp on / off	Suspected areas Major control steps	The client offers(Diff.)/problem(s) associated with the DTCs	Fault code(s) to be dealt with before working through this flow chart	Tools required
P12A1	Injector 1: Injector injecting too much or injected blocked open. (Engine Mixer)								
P12A4	Injector 2: Injector injecting too much or injected blocked open. (Engine Mixer)								
P12A7	Injector 3: Injector injecting too much or injected blocked open. (Engine Mixer)								
P12AA	Injector 4: Injector injecting too much or injected blocked open. (Engine Mixer)								

PRE-CHECK

FLOW CHART Test procedure

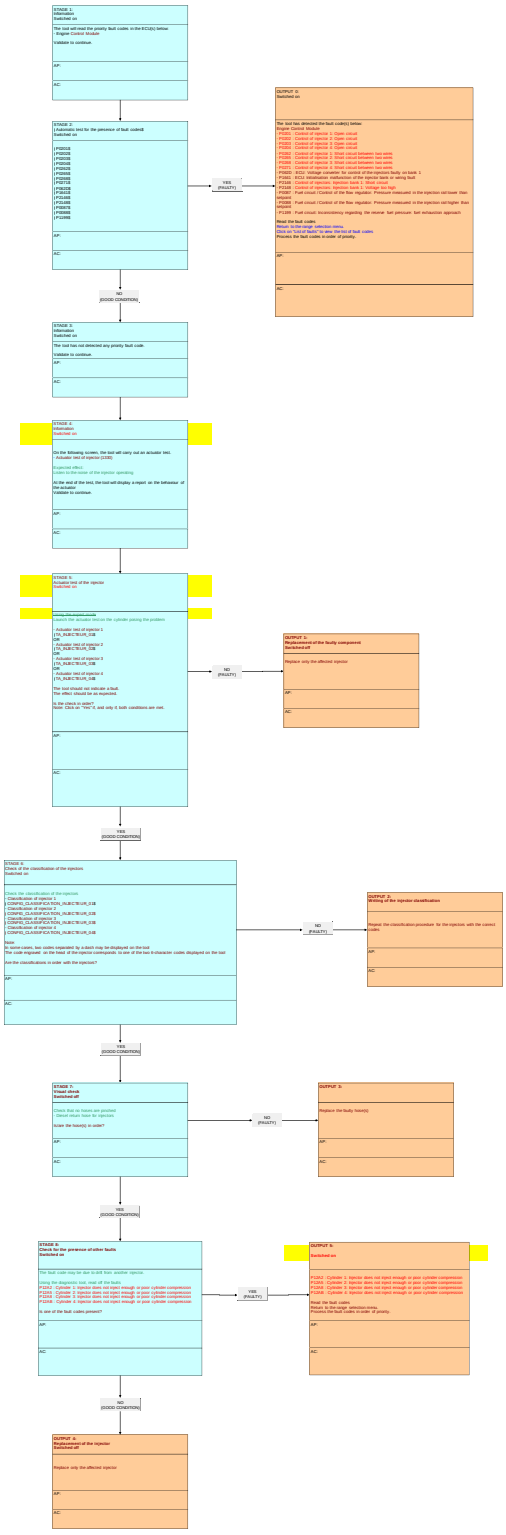

INFORMATION : FAULT CODE P12A5 (ENGINE MANAGEMENT ECU)

SPECIAL FEATURE :

FOR : 1CMJ - B0FBM : DV6C TURBO DIESEL

FOR : 1PMJ - B0FBM : DV6C TURBO DIESEL

Engine ECU CONTINENTAL SID 807 branch 2	
Fault code	P12A5
After sales description of the fault code	No. 2 cylinder : Injector not injecting enough, or poor cylinder compression
Description of the diagnostics	The correction made to the fuel flow drift of injector 2 is below the minimum threshold
Conditions of activation of the diagnostics	Engine running at idle
Conditions of disappearance of the fault	Driving for 5 minutes
Down-grade modes if fault present	Closing of the EGR (exhaust gas recycling) valve
	Reversible deactivation of the vehicle speed limiter
	Reversible deactivation of the vehicle cruise control
	Deactivation of the "easy-move" (electric parking brake) functionality
	Function for limitation of the static torque for the protection of the gearbox
	Deactivation of taking account of the tight spot information
	Switching of the turbocharging pressure regulation to controlled mode
	Deactivation of the request for regeneration of the particle filter from the diagnostic tool
Switching on of the warning lamp and/or warning message	Warning lamp MIL
Main customer complaints likely	Noise
	Jerking/stalling
	Starting problem
	Malfunctioning of the idle
	Absence of automatic stopping of the internal combustion engine (Vehicle equipped with "stop and start")
	Problem with automatic restarting of the internal combustion engine (Vehicle equipped with "stop and start")
	Slightly higher fuel consumption
	Smoke from the exhaust
	Lack of power

	Engine acceleration at wrong time
Suspect areas	Fuel injector 2
	Poor quality of the fuel or type of fuel
	Fuel return
	Inlet valve - Exhaust valve - spring - seal
	Piston - Segment - Shaft - Cooling system
	Conrods

Fault code(s): P12A2 or P12A5 or P12A8 or P12AB

Reminder DTC

Do not fill in this section for the FLOW CHART phase

DTC Key	Alternative text of the DTC	Fault code	Conditions for fault finding	Deregulated mode after a fault is ascertained	Illuminated warning lamp ON	Suspected areas Major control steps	The client effect(s) (symptom(s)) associated with the DTC's	Fault code(s) to be dealt with before working through this flow chart	Tools required
P12A2	Injector 1: Injector does not inject enough or poor cylinder compression								
P12A5	Injector 2: Injector does not inject enough or poor cylinder compression								
P12A8	Injector 3: Injector does not inject enough or poor cylinder compression				Yes				
P12AB	Injector 4: Injector does not inject enough or poor cylinder compression								

PRE-CHECK

FLOW CHART Test procedure

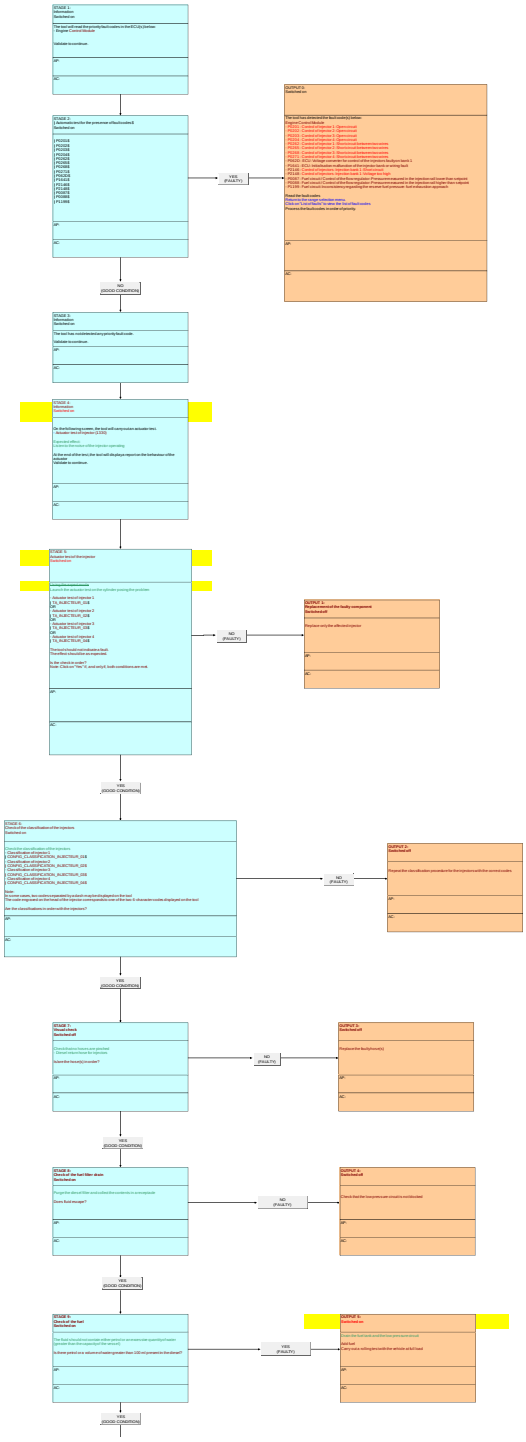

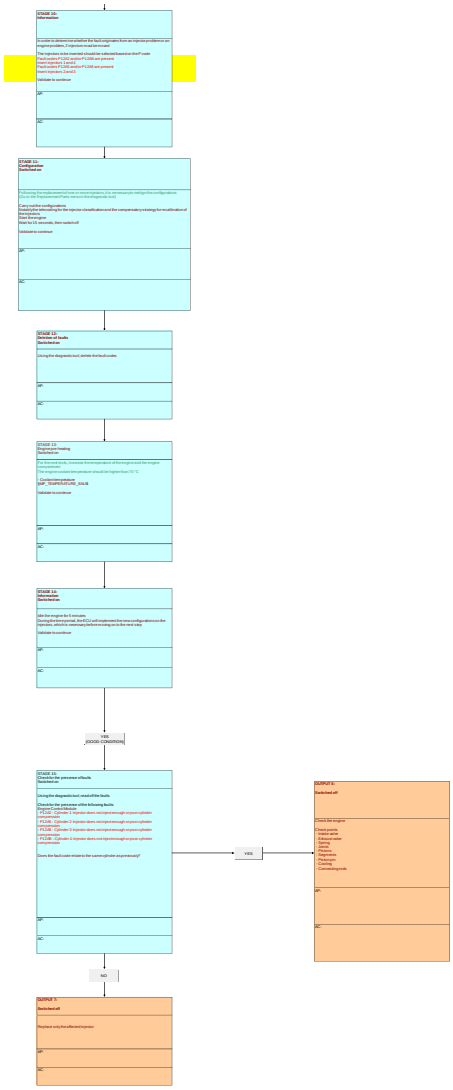
STAGE 10:
Information
In order to determine whether the fault originates from an injection problem or an engine problem, 3 injectors must be moved
The injectors to be inverted should be selected based on the P code
Fault codes P1126 and/or P1268 are present
Fault codes P1127 and/or P1269 are present
Fault codes P1128 and/or P1270 are present
Invert injectors 2 and 3
Validate to continue
AP:
AC:
STAGE 11:
Configuration
Switched on
Following the replacement of one or more injectors, it is necessary to realign the configurations.
Go to the Replacement Parts menu in the diagnostic tool)
Carry out the configurations
Reminder: When carrying the the injector classification and the compensatory cranking for recalibration of the injectors
Wait for 15 seconds, then switch off
Ignition to continue
AP:
AC:
STAGE 12:
Clearing of all faults
Switched on
Using the diagnostic tool, delete the fault codes
AP:
AC:
STAGE 13:
Engine warming
Switched on
For the next test, reverse the temperature of the engine and the engine compartment
The engine coolant temperature should be higher than 70 °C
Correct temperature
ENP_TEMPERATURE_VALID
Validate to continue
AP:
AC:
STAGE 14:
Information
Switched on
Idle the engine for 5 minutes
During the time period, the ECU will implement the new configuration on the injectors, which is necessary before moving on to the next step
Validate to continue
AP:
AC:
YES
(GOOD CONDITION)
STAGE 15:
Check for presence of faults
Switched on
Using the diagnostic tool, read out the faults
Check for the presence of the following faults:
Engine Control Module
- P1126 - Cylinder 1 injector does not inject enough or poor cylinder compression
- P1127 - Cylinder 2 injector does not inject enough or poor cylinder compression
- P1128 - Cylinder 3 injector does not inject enough or poor cylinder compression
- P1129 - Cylinder 4 injector does not inject enough or poor cylinder compression
Does the fault code relate to the same cylinder as previously?
AP:
AC:
YES
OUTPUT 6:
Switched off
Check the engine
Check points
- Ignition
- Exhaust outlet
- Valves
- Camshaft
- Pistons
- Connecting rods
- Piston pin
- Cowling
- Connecting rods
AP:
AC:
NO
OUTPUT 7:
Switched off
Replace only the affected injector
AP:
AC:

INFORMATION : FAULT CODE P12A7 (ENGINE MANAGEMENT ECU)

SPECIAL FEATURE :

FOR : 1CB7 - B0FBM : DV6C TURBO DIESEL

FOR : 1CX7 - B0FBM : DV6C TURBO DIESEL

FOR : 1C58 - B0FBM : DV6C TURBO DIESEL

FOR : 1PT7 - B0FBM : DV6C TURBO DIESEL

FOR : 1PW2 - B0FBM : DV6C TURBO DIESEL

FOR : 1CB8 - B0FBM : DV6C TURBO DIESEL

FOR : 1CXA - B0FBM : DV6C TURBO DIESEL

FOR : 1CYA - B0FBM : DV6C TURBO DIESEL

FOR : 1PTB - B0FBM : DV6C TURBO DIESEL

FOR : 1PTC - B0FBM : DV6C TURBO DIESEL

FOR : 1PIA - B0FBM : DV6C TURBO DIESEL

FOR : 1PMJ - B0FBM : DV6C TURBO DIESEL

FOR : 1CMJ - B0FBM : DV6C TURBO DIESEL

Engine ECU CONTINENTAL SID 807 branch 2	
Fault code	P12A7
After sales description of the fault code	No. 3 cylinder : Injector injects too much or remains jammed in the open position
Description of the diagnostics	The correction made to the fuel flow drift of injector 3 is higher than the maximum threshold
Conditions of activation of the diagnostics	At least one of the following conditions must be fulfilled - Ignition on - engine running
Conditions of disappearance of the fault	Driving for 5 minutes
	Closing of the EGR (exhaust gas recycling) valve
	Reversible deactivation of the vehicle speed limiter
	Reversible deactivation of the vehicle cruise control
	Deactivation of the "easy-move" (electric parking brake)

Down-grade modes if fault present	functionality
	Function for limitation of the static torque for the protection of the gearbox
	Deactivation of taking account of the tight spot information
	Cutting of fuel injector 3
	Switching to fuel "normal reduced flow" mode
	Deactivation of the request for regeneration of the particle filter from the diagnostic tool
	Switching of the turbocharging pressure regulation to controlled mode
Switching on of the warning lamp and/or warning message	Warning lamp MIL
	"SERVICE" warning lamp
Main customer complaints likely	Jerking/stalling
	Engine acceleration at wrong time
	Noise
	Slightly higher fuel consumption
	Starting problem
	Smoke from the exhaust
	Lack of power
Suspect areas	Fuel injector 3
	Injector classification
	Fuel return

Fault code(s): P12A1 or P12A4 or P12A7 or P12AA

Reminder DTC

DTC no.	Alternative text of the DTC	Do not fill in this section for the FLOW CHART phase: Fully tested	Conditions for fault finding	Discriminated mode after a fault is memorised	Driver warning light	Suspected areas Major control steps	The client offers(OR)implicit(AND) associated with the DTCs	Fault code(s) to be dealt with before working through this flow chart	Tools required
P12A1	Injector 1: Injector injecting too much or injected blocked open. (Engine Mixer)								
P12A4	Injector 2: Injector injecting too much or injected blocked open. (Engine Mixer)								
P12A7	Injector 3: Injector injecting too much or injected blocked open. (Engine Mixer)								
P12AA	Injector 4: Injector injecting too much or injected blocked open. (Engine Mixer)								

PRE-CHECK

FLOW CHART Test procedure

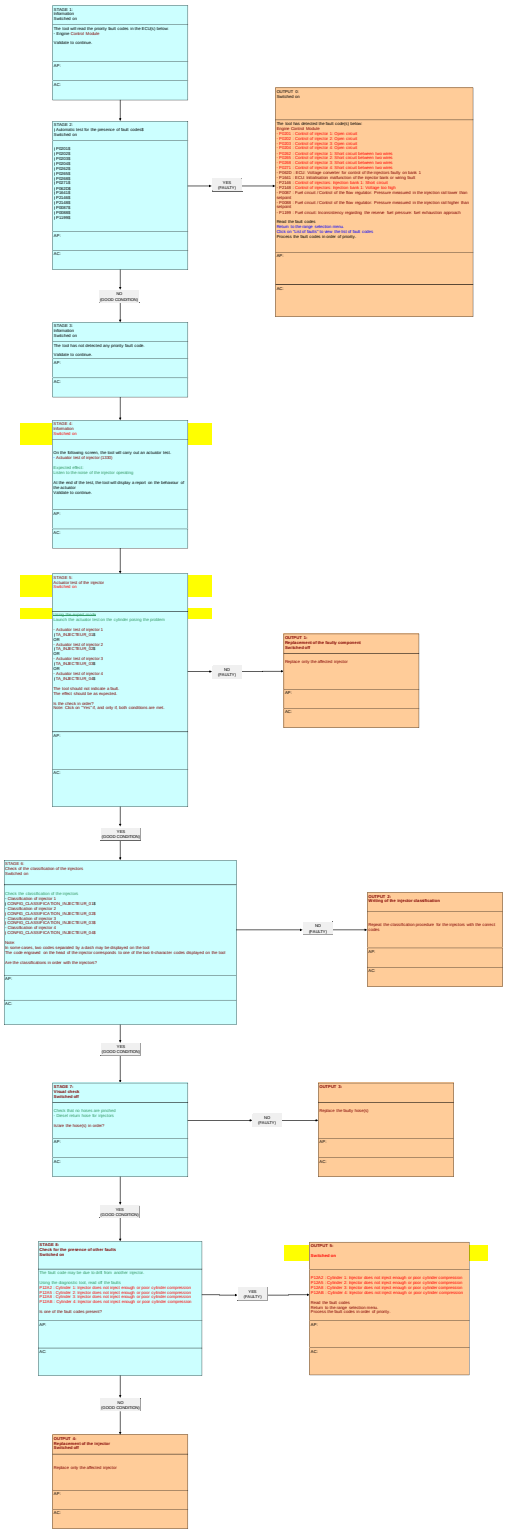

INFORMATION : FAULT CODE P12A8 (ENGINE MANAGEMENT ECU)

SPECIAL FEATURE :

FOR : 1CB7 - B0FBM : DV6C TURBO DIESEL

FOR : 1CX7 - B0FBM : DV6C TURBO DIESEL

FOR : 1C58 - B0FBM : DV6C TURBO DIESEL

FOR : 1PT7 - B0FBM : DV6C TURBO DIESEL

FOR : 1PW2 - B0FBM : DV6C TURBO DIESEL

FOR : 1CB8 - B0FBM : DV6C TURBO DIESEL

FOR : 1CXA - B0FBM : DV6C TURBO DIESEL

FOR : 1CYA - B0FBM : DV6C TURBO DIESEL

FOR : 1PTB - B0FBM : DV6C TURBO DIESEL

FOR : 1PTC - B0FBM : DV6C TURBO DIESEL

FOR : 1PIA - B0FBM : DV6C TURBO DIESEL

FOR : 1CMJ - B0FBM : DV6C TURBO DIESEL

FOR : 1PMJ - B0FBM : DV6C TURBO DIESEL

Engine ECU CONTINENTAL SID 807 branch 2	
Fault code	P12A8
After sales description of the fault code	No. 3 cylinder : Injector not injecting enough, or poor cylinder compression
Description of the diagnostics	The correction made to the fuel flow drift of injector 3 is below the minimum threshold
Conditions of activation of the diagnostics	Engine running at idle
Conditions of disappearance of the fault	Driving for 5 minutes
	Closing of the EGR (exhaust gas recycling) valve
	Reversible deactivation of the vehicle speed limiter
	Reversible deactivation of the vehicle cruise control
	Deactivation of the "easy-move" (electric parking brake) functionality
Down-grade modes	Function for limitation of the static torque for the

if fault present	protection of the gearbox
	Deactivation of taking account of the tight spot information
	Switching of the turbocharging pressure regulation to controlled mode
	Deactivation of the request for regeneration of the particle filter from the diagnostic tool
Switching on of the warning lamp and/or warning message	Warning lamp MIL
Main customer complaints likely	Noise
	Jerking/stalling
	Starting problem
	Malfunctioning of the idle
	Absence of automatic stopping of the internal combustion engine (Vehicle equipped with "stop and start")
	Smoke from the exhaust
	Lack of power
	Engine acceleration at wrong time
	Problem with automatic restarting of the internal combustion engine (Vehicle equipped with "stop and start")
	Slightly higher fuel consumption
Suspect areas	Fuel injector 3
	Poor quality of the fuel or type of fuel
	Fuel return
	Inlet valve - Exhaust valve - spring - seal
	Piston - Segment - Shaft - Cooling system
	Conrods

Fault code(s): P12A2 or P12A5 or P12A8 or P12AB

Reminder DTC

As per the table selection for the FLOW CHART phase

DTC Hex	Alternative text of the DTC	Fault code	Conditions for fault finding	Deenergized mode after a fault is ascertained	Illuminated warning light on the dash	Suspected areas Major control steps	The client effect(s) (symptom(s)) associated with the DTCs	Fault code(s) to be dealt with before working through this flow chart	Tools required
P12A2	Injector 1: Injector does not inject enough or poor cylinder compression								
P12A5	Injector 2: Injector does not inject enough or poor cylinder compression								
P12A8	Injector 3: Injector does not inject enough or poor cylinder compression				Yes				
P12AB	Injector 4: Injector does not inject enough or poor cylinder compression								

PRE-CHECK

FLOW CHART Test procedure

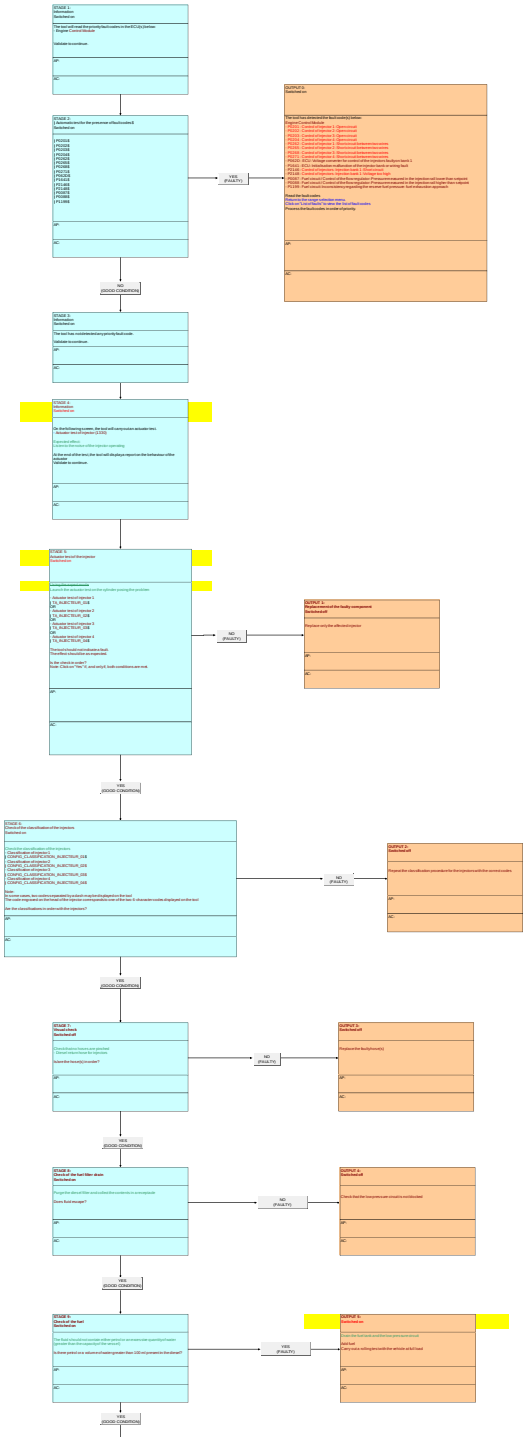
STAGE 1:
Information
Switched on
The tool will read the priority fault codes in the ECU(s) (active Engine Control Module
Validate to continue.
AP:
AC:
STAGE 2:
| Automatic test for the presence of faul codes |
Switched on
| P0233X
| P0234X
| P0235X
| P0236X
| P0237X
| P0238X
| P0239X
| P023AX
| P023BX
| P023CX
| P023DX
| P023EX
| P023FX
| P0240X
| P0241X
| P0242X
| P0243X
| P0244X
| P0245X
| P0246X
| P0247X
| P0248X
| P0249X
| P024AX
| P024BX
| P024CX
| P024DX
| P024EX
| P024FX
| P0250X
| P0251X
| P0252X
| P0253X
| P0254X
| P0255X
| P0256X
| P0257X
| P0258X
| P0259X
| P025AX
| P025BX
| P025CX
| P025DX
| P025EX
| P025FX
| P0260X
| P0261X
| P0262X
| P0263X
| P0264X
| P0265X
| P0266X
| P0267X
| P0268X
| P0269X
| P026AX
| P026BX
| P026CX
| P026DX
| P026EX
| P026FX
| P0270X
| P0271X
| P0272X
| P0273X
| P0274X
| P0275X
| P0276X
| P0277X
| P0278X
| P0279X
| P027AX
| P027BX
| P027CX
| P027DX
| P027EX
| P027FX
| P0280X
| P0281X
| P0282X
| P0283X
| P0284X
| P0285X
| P0286X
| P0287X
| P0288X
| P0289X
| P028AX
| P028BX
| P028CX
| P028DX
| P028EX
| P028FX
| P0290X
| P0291X
| P0292X
| P0293X
| P0294X
| P0295X
| P0296X
| P0297X
| P0298X
| P0299X
| P029AX
| P029BX
| P029CX
| P029DX
| P029EX
| P029FX
| P02A0X
| P02A1X
| P02A2X
| P02A3X
| P02A4X
| P02A5X
| P02A6X
| P02A7X
| P02A8X
| P02A9X
| P02AAX
| P02ABX
| P02ACX
| P02ADX
| P02AEX
| P02AFX
| P02B0X
| P02B1X
| P02B2X
| P02B3X
| P02B4X
| P02B5X
| P02B6X
| P02B7X
| P02B8X
| P02B9X
| P02BAX
| P02BBX
| P02BCX
| P02BDX
| P02BEX
| P02BFX
| P02C0X
| P02C1X
| P02C2X
| P02C3X
| P02C4X
| P02C5X
| P02C6X
| P02C7X
| P02C8X
| P02C9X
| P02CAX
| P02CBX
| P02CCX
| P02CDX
| P02CEX
| P02CFX
| P02D0X
| P02D1X
| P02D2X
| P02D3X
| P02D4X
| P02D5X
| P02D6X
| P02D7X
| P02D8X
| P02D9X
| P02DAX
| P02DBX
| P02DCX
| P02DDX
| P02DEX
| P02DFX
| P02E0X
| P02E1X
| P02E2X
| P02E3X
| P02E4X
| P02E5X
| P02E6X
| P02E7X
| P02E8X
| P02E9X
| P02EAX
| P02EBX
| P02ECX
| P02EDX
| P02EEX
| P02EFX
| P02F0X
| P02F1X
| P02F2X
| P02F3X
| P02F4X
| P02F5X
| P02F6X
| P02F7X
| P02F8X
| P02F9X
| P02FAX
| P02FBX
| P02FCX
| P02FDX
| P02FEX
| P02FFX
| P1000
| P1001
| P1002
| P1003
| P1004
| P1005
| P1006
| P1007
| P1008
| P1009
| P100A
| P100B
| P100C
| P100D
| P100E
| P100F
| P1010
| P1011
| P1012
| P1013
| P1014
| P1015
| P1016
| P1017
| P1018
| P1019
| P101A
| P101B
| P101C
| P101D
| P101E
| P101F
| P1020
| P1021
| P1022
| P1023
| P1024
| P1025
| P1026
| P1027
| P1028
| P1029
| P102A
| P102B
| P102C
| P102D
| P102E
| P102F
| P1030
| P1031
| P1032
| P1033
| P1034
| P1035
| P1036
| P1037
| P1038
| P1039
| P103A
| P103B
| P103C
| P103D
| P103E
| P103F
| P1040
| P1041
| P1042
| P1043
| P1044
| P1045
| P1046
| P1047
| P1048
| P1049
| P104A
| P104B
| P104C
| P104D
| P104E
| P104F
| P1050
| P1051
| P1052
| P1053
| P1054
| P1055
| P1056
| P1057
| P1058
| P1059
| P105A
| P105B
| P105C
| P105D
| P105E
| P105F
| P1060
| P1061
| P1062
| P1063
| P1064
| P1065
| P1066
| P1067
| P1068
| P1069
| P106A
| P106B
| P106C
| P106D
| P106E
| P106F
| P1070
| P1071
| P1072
| P1073
| P1074
| P1075
| P1076
| P1077
| P1078
| P1079
| P107A
| P107B
| P107C
| P107D
| P107E
| P107F
| P1080
| P1081
| P1082
| P1083
| P1084
| P1085
| P1086
| P1087
| P1088
| P1089
| P108A
| P108B
| P108C
| P108D
| P108E
| P108F
| P1090
| P1091
| P1092
| P1093
| P1094
| P1095
| P1096
| P1097
| P1098
| P1099
| P109A
| P109B
| P109C
| P109D
| P109E
| P109F
| P10A0
| P10A1
| P10A2
| P10A3
| P10A4
| P10A5
| P10A6
| P10A7
| P10A8
| P10A9
| P10AA
| P10AB
| P10AC
| P10AD
| P10AE
| P10AF
| P10B0
| P10B1
| P10B2
| P10B3
| P10B4
| P10B5
| P10B6
| P10B7
| P10B8
| P10B9
| P10BA
| P10BB
| P10BC
| P10BD
| P10BE
| P10BF
| P10C0
| P10C1
| P10C2
| P10C3
| P10C4
| P10C5
| P10C6
| P10C7
| P10C8
| P10C9
| P10CA
| P10CB
| P10CC
| P10CD
| P10CE
| P10CF
| P10D0
| P10D1
| P10D2
| P10D3
| P10D4
| P10D5
| P10D6
| P10D7
| P10D8
| P10D9
| P10DA
| P10DB
| P10DC
| P10DD
| P10DE
| P10DF
| P10E0
| P10E1
| P10E2
| P10E3
| P10E4
| P10E5
| P10E6
| P10E7
| P10E8
| P10E9
| P10EA
| P10EB
| P10EC
| P10ED
| P10EE
| P10EF
| P10F0
| P10F1
| P10F2
| P10F3
| P10F4
| P10F5
| P10F6
| P10F7
| P10F8
| P10F9
| P10FA
| P10FB
| P10FC
| P10FD
| P10FE
| P10FF
| P1100
| P1101
| P1102
| P1103
| P1104
| P1105
| P1106
| P1107
| P1108
| P1109
| P110A
| P110B
| P110C
| P110D
| P110E
| P110F
| P1110
| P1111
| P1112
| P1113
| P1114
| P1115
| P1116
| P1117
| P1118
| P1119
| P111A
| P111B
| P111C
| P111D
| P111E
| P111F
| P1120
| P1121
| P1122
| P1123
| P1124
| P1125
| P1126
| P1127
| P1128
| P1129
| P112A
| P112B
| P112C
| P112D
| P112E
| P112F
| P1130
| P1131
| P1132
| P1133
| P1134
| P1135
| P1136
| P1137
| P1138
| P1139
| P113A
| P113B
| P113C
| P113D
| P113E
| P113F
| P1140
| P1141
| P1142
| P1143
| P1144
| P1145
| P1146
| P1147
| P1148
| P1149
| P114A
| P114B
| P114C
| P114D
| P114E
| P114F
| P1150
| P1151
| P1152
| P1153
| P1154
| P1155
| P1156
| P1157
| P1158
| P1159
| P115A
| P115B
| P115C
| P115D
| P115E
| P115F
| P1160
| P1161
| P1162
| P1163
| P1164
| P1165
| P1166
| P1167
| P1168
| P1169
| P116A
| P116B
| P116C
| P116D
| P116E
| P116F
| P1170
| P1171
| P1172
| P1173
| P1174
| P1175
| P1176
| P1177
| P1178
| P1179
| P117A
| P117B
| P117C
| P117D
| P117E
| P117F
| P1180
| P1181
| P1182
| P1183
| P1184
| P1185
| P1186
| P1187
| P1188
| P1189
| P118A
| P118B
| P118C
| P118D
| P118E
| P118F
| P1190
| P1191
| P1192
| P1193
| P1194
| P1195
| P1196
| P1197
| P1198
| P1199
| P119A
| P119B
| P119C
| P119D
| P119E
| P119F
| P11A0
| P11A1
| P11A2
| P11A3
| P11A4
| P11A5
| P11A6
| P11A7
| P11A8
| P11A9
| P11AA
| P11AB
| P11AC
| P11AD
| P11AE
| P11AF
| P11B0
| P11B1
| P11B2
| P11B3
| P11B4
| P11B5
| P11B6
| P11B7
| P11B8
| P11B9
| P11BA
| P11BB
| P11BC
| P11BD
| P11BE
| P11BF
| P11C0
| P11C1
| P11C2
| P11C3
| P11C4
| P11C5
| P11C6
| P11C7
| P11C8
| P11C9
| P11CA
| P11CB
| P11CC
| P11CD
| P11CE
| P11CF
| P11D0
| P11D1
| P11D2
| P11D3
| P11D4
| P11D5
| P11D6
| P11D7
| P11D8
| P11D9
| P11DA
| P11DB
| P11DC
| P11DD
| P11DE
| P11DF
| P11E0
| P11E1
| P11E2
| P11E3
| P11E4
| P11E5
| P11E6
| P11E7
| P11E8
| P11E9
| P11EA
| P11EB
| P11EC
| P11ED
| P11EE
| P11EF
| P11F0
| P11F1
| P11F2
| P11F3
| P11F4
| P11F5
| P11F6
| P11F7
| P11F8
| P11F9
| P11FA
| P11FB
| P11FC
| P11FD
| P11FE
| P11FF
| P1200
| P1201
| P1202
| P1203
| P1204
| P1205
| P1206
| P1207
| P1208
| P1209
| P120A
| P120B
| P120C
| P120D
| P120E
| P120F
| P1210
| P1211
| P1212
| P1213
| P1214
| P1215
| P1216
| P1217
| P1218
| P1219
| P121A
| P121B
| P121C
| P121D
| P121E
| P121F
| P1220
| P1221
| P1222
| P1223
| P1224
| P1225
| P1226
| P1227
| P1228
| P1229
| P122A
| P122B
| P122C
| P122D
| P122E
| P122F
| P1230
| P1231
| P1232
| P1233
| P1234
| P1235
| P1236
| P1237
| P1238
| P1239
| P123A
| P123B
| P123C
| P123D
| P123E
| P123F
| P1240
| P1241
| P1242
| P1243
| P1244
| P1245
| P1246
| P1247
| P1248
| P1249
| P124A
| P124B
| P124C
| P124D
| P124E
| P124F
| P1250
| P1251
| P1252
| P1253
| P1254
| P1255
| P1256
| P1257
| P1258
| P1259
| P125A
| P125B
| P125C
| P125D
| P125E
| P125F
| P1260
| P1261
| P1262
| P1263
| P1264
| P1265
| P1266
| P1267
| P1268
| P1269
| P126A
| P126B
| P126C
| P126D
| P126E
| P126F
| P1270
| P1271
| P1272
| P1273
| P1274
| P1275
| P1276
| P1277
| P1278
| P1279
| P127A
| P127B
| P127C
| P127D
| P127E
| P127F
| P1280
| P1281
| P1282
| P1283
| P1284
| P1285
| P1286
| P1287
| P1288
| P1289
| P128A
| P128B
| P128C
| P128D
| P128E
| P128F
| P1290
| P1291
| P1292
| P1293
| P1294
| P1295
| P1296
| P1297
| P1298
| P1299
| P129A
| P129B
| P129C
| P129D
| P129E
| P129F
| P12A0
| P12A1
| P12A2
| P12A3
| P12A4
| P12A5
| P12A6
| P12A7
| P12A8
| P12A9
| P12AA
| P12AB
| P12AC
| P12AD
| P12AE
| P12AF
| P12B0
| P12B1
| P12B2
| P12B3
| P12B4
| P12B5
| P12B6
| P12B7
| P12B8
| P12B9
| P12BA
| P12BB
| P12BC
| P12BD
| P12BE
| P12BF
| P12C0
| P12C1
| P12C2
| P12C3
| P12C4
| P12C5
| P12C6
| P12C7
| P12C8
| P12C9
| P12CA
| P12CB
| P12CC
| P12CD
| P12CE
| P12CF
| P12D0
| P12D1
| P12D2
| P12D3
| P12D4
| P12D5
| P12D6
| P12D7
| P12D8
| P12D9
| P12DA
| P12DB
| P12DC
| P12DD
| P12DE
| P12DF
| P12E0
| P12E1
| P12E2
| P12E3
| P12E4
| P12E5
| P12E6
| P12E7
| P12E8
| P12E9
| P12EA
| P12EB
| P12EC
| P12ED
| P12EE
| P12EF
| P12F0
| P12F1
| P12F2
| P12F3
| P12F4
| P12F5
| P12F6
| P12F7
| P12F8
| P12F9
| P12FA
| P12FB
| P12FC
| P12FD
| P12FE
| P12FF
| P1300
| P1301
| P1302
| P1303
| P1304
| P1305
| P1306
| P1307
| P1308
| P1309
| P130A
| P130B
| P130C
| P130D
| P130E
| P130F
| P1310
| P1311
| P1312
| P1313
| P1314
| P1315
| P1316
| P1317
| P1318
| P1319
| P131A
| P131B
| P131C
| P131D
| P131E
| P131F
| P1320
| P1321
| P1322
| P1323
| P1324
| P1325
| P1326
| P1327
| P1328
| P1329
| P132A
| P132B
| P132C
| P132D
| P132E
| P132F
| P1330
| P1331
| P1332
| P1333
| P1334
| P1335
| P1336
| P1337
| P1338
| P1339
| P133A
| P133B
| P133C
| P133D
| P133E
| P133F
| P1340
| P1341
| P1342
| P1343
| P1344
| P1345
| P1346
| P1347
| P1348
| P1349
| P134A
| P134B
| P134C
| P134D
| P134E
| P134F
| P1350
| P1351
| P1352
| P1353
| P1354
| P1355
| P1356
| P1357
| P1358
| P1359
| P135A
| P135B
| P135C
| P135D
| P135E
| P135F
| P1360
| P1361
| P1362
| P1363
| P1364
| P1365
| P1366
| P1367
| P1368
| P1369
| P136A
| P136B
| P136C
| P136D
| P136E
| P136F
| P1370
| P1371
| P1372
| P1373
| P1374
| P1375
| P1376
| P1377
| P1378
| P1379
| P137A
| P137B
| P137C
| P137D
| P137E
| P137F
| P1380
| P1381
| P1382
| P1383
| P1384
| P1385
| P1386
| P1387
| P1388
| P1389
| P138A
| P138B
| P138C
| P138D
| P138E
| P138F
| P1390
| P1391
| P1392
| P1393
| P1394
| P1395
| P1396
| P1397
| P1398
| P1399
| P139A
| P139B
| P139C
| P139D
| P139E
| P139F
| P13A0
| P13A1
| P13A2
| P13A3
| P13A4
| P13A5
| P13A6
| P13A7
| P13A8
| P13A9
| P13AA
| P13AB
| P13AC
| P13AD
| P13AE
| P13AF
| P13B0
| P13B1
| P13B2
| P13B3
| P13B4
| P13B5
| P13B6
| P13B7
| P13B8
| P13B9
| P13BA
| P13BB
| P13BC
| P13BD
| P13BE
| P13BF
| P13C0
| P13C1
| P13C2
| P13C3
| P13C4
| P13C5
| P13C6
| P13C7
| P13C8
| P13C9
| P13CA
| P13CB
| P13CC
| P13CD
| P13CE
| P13CF
| P13D0
| P13D1
| P13D2
| P13D3
| P13D4
| P13D5
| P13D6
| P13D7
| P13D8
| P13D9
| P13DA
| P13DB
| P13DC
| P13DD
| P13DE
| P13DF
| P13E0
| P13E1
| P13E2
| P13E3
| P13E4
| P13E5
| P13E6
| P13E7
| P13E8
| P13E9
| P13EA
| P13EB
| P13EC
| P13ED
| P13EE
| P13EF
| P13F0
| P13F1
| P13F2
| P13F3
| P13F4
| P13F5
| P13F6
| P13F7
| P13F8
| P13F9
| P13FA
| P13FB
| P13FC
| P13FD
| P13FE
| P13FF
| P1400
| P1401
| P1402
| P1403
| P1404
| P1405
| P1406
| P1407
| P1408
| P1409
| P140A
| P140B
| P140C
| P140D
| P140E
| P140F
| P1410
| P1411
| P1412
| P1413
| P1414
| P1415
| P1416
| P1417
| P1418
| P1419
| P141A
| P141B
| P141C
| P141D
| P141E
| P141F
| P1420
| P1421
| P1422
| P1423
| P1424
| P1425
| P1426
| P1427
| P1428
| P1429
| P142A
| P142B
| P142C
| P142D
| P142E
| P142F
| P1430
| P1431
| P1432
| P1433
| P1434
| P1435
| P1436
| P1437
| P1438
| P1439
| P143A
| P143B
| P143C
| P143D
| P143E
| P143F
| P1440
| P1441
| P1442
| P1443
| P1444
| P1445
| P1446
| P1447
| P1448
| P1449
| P144A
| P144B
| P144C
| P144D
| P144E
| P144F
| P1450
| P1451
| P1452
| P1453
| P1454
| P1455
| P1456
| P1457
| P1458
| P1459
| P145A
| P145B
| P145C
| P145D
| P145E
| P145F
| P1460
| P1461
| P1462
| P1463
| P1464
| P1465
| P1466
| P1467
| P1468
| P1469
| P146A
| P146B
| P146C
| P146D
| P146E
| P146F
| P1470
| P1471
| P1472
| P1473
| P1474
| P1475
| P1476
| P1477
| P1478
| P1479
| P147A
| P147B
| P147C
| P147D
| P147E
| P147F
| P1480
| P1481
| P1482
| P1483
| P1484
| P1485
| P1486
| P1487
| P1488
| P1489
| P148A
| P148B
| P148C
| P148D
| P148E
| P148F
| P1490
| P1491
| P1492
| P1493
| P1494
| P1495
| P1496
| P1497
| P1498
| P1499
| P149A
| P149B
| P149C
| P149D
| P149E
| P149F
| P14A0
| P14A1
| P14A2
| P14A3
| P14A4
| P14A5
| P14A6
| P14A7
| P14A8
| P14A9
| P14AA
| P14AB
| P14AC
| P14AD
| P14AE
| P14AF
| P14B0
| P14B1
| P14B2
| P14B3
| P14B4
| P14B5
| P14B6
| P14B7
| P14B8
| P14B9
| P14BA
| P14BB
| P14BC
| P14BD
| P14BE
| P14BF
| P14C0
| P14C1
| P14C2
| P14C3
| P14C4
| P14C5
| P14C6
| P14C7
| P14C8
| P14C9
| P14CA
| P14CB
| P14CC
| P14CD
| P14CE
| P14CF
| P14D0
| P14D1
| P14D2
| P14D3
| P14D4
| P14D5
| P14D6
| P14D7
| P14D8
| P14D9
| P14DA
| P14DB
| P14DC
| P14DD
| P14DE
| P14DF
| P14E0
| P14E1
| P14E2
| P14E3
| P14E4
| P14E5
| P14E6
| P14E7
| P14E8
| P14E9
| P14EA
| P14EB
| P14EC
| P14ED
| P14EE
| P14EF
| P14F0
| P14F1
| P14F2
| P14F3
| P14F4
| P14F5
| P14F6
| P14F7
| P14F8
| P14F9
| P14FA
| P14FB
| P14FC
| P14FD
| P14FE
| P14FF
| P1500
| P1501
| P1502
| P1503
| P1504
| P1505
| P1506
| P1507
| P1508
| P1509
| P150A
| P150B
| P150C
| P150D
| P150E
| P150F
| P1510
| P1511
| P1512
| P1513
| P1514
| P1515
| P1516
| P1517
| P1518
| P1519
| P151A
| P151B
| P151C
| P151D
| P151E
| P151F
| P1520
| P1521
| P1522
| P1523
| P1524
| P1525
| P1526
| P1527
| P1528
| P1529
| P152A
| P152B
| P152C
| P152D
| P152E
| P152F
| P1530
| P1531
| P1532
| P1533
| P1534
| P1535
| P1536
| P1537
| P1538
| P1539
| P153A
| P153B
| P153C
| P153D
| P153E
| P153F
| P1540
| P1541
| P1542
| P1543
| P1544
| P1545
| P1546
| P1547
| P1548
| P1549
| P154A
| P154B
| P154C
| P154D
| P154E
| P154F
| P1550
| P1551
| P1552
| P1553
| P1554
| P1555
| P1556
| P1557
| P1558
| P1559
| P155A
| P155B
| P155C
| P155D
| P155E
| P155F
| P1560
| P1561
| P1562
| P1563
| P1564
| P1565
| P1566
| P1567
| P1568
| P1569
| P156A
| P156B
| P156C
| P156D
| P156E
| P156F
| P1570
| P1571
| P1572
| P1573
| P1574
| P1575
| P1576
| P1577
| P1578
| P1579
| P157A
| P157B
| P157C
| P157D
| P157E
| P157F
| P1580
| P1581
| P1582
| P1583
| P1584
| P1585
| P1586
| P1587
| P1588
| P1589
| P158A
| P158B
| P158C
| P158D
| P158E
| P158F
| P1590
| P1591
| P1592
| P1593
| P1594
| P1595
| P1596
| P1597
| P1598
| P1599
| P159A
| P159B
| P159C
| P159D
| P159E
| P159F
| P15A0
| P15A1
| P15A2
| P15A3
| P15A4
| P15A5
| P15A6
| P15A7
| P15A8
| P15A9
| P15AA
| P15AB
| P15AC
| P15AD
| P15AE
| P15AF
| P15B0
| P15B1
| P15B2
| P15B3
| P15B4
| P15B5
| P15B6
| P15B7
| P15B8
| P15B9
| P15BA
| P15BB
| P15BC
| P15BD
| P15BE
| P15BF
| P15C0
| P15C1
| P15C2
| P15C3
| P15C4
| P15C5
| P15C6
| P15C7
| P15C8
| P15C9
| P15CA
| P15CB
| P15CC
| P15CD
| P15CE
| P15CF
| P15D0
| P15D1
| P15D2
| P15D3
| P15D4
| P15D5
| P15D6
| P15D7
| P15D8
| P15D9
| P15DA
| P15DB
| P15DC
| P15DD
| P15DE
| P15DF
| P15E0
| P15E1
| P15E2
| P15E3
| P15E4
| P15E5
| P15E6
| P15E7
| P15E8
| P15E9
| P15EA
| P15EB
| P15EC
| P15ED
| P15EE
| P15EF
| P15F0
| P15F1
| P15F2
| P15F3
| P15F4
| P15F5
| P15F6
| P15F7
| P15F8
| P15F9
| P15FA
| P15FB
| P15FC
| P15FD
| P15FE
| P15FF
| P1600
| P1601
| P1602
| P1603
| P1604
| P1605
| P1606
| P1607
| P1608
| P1609
| P160A
| P160B
| P160C
| P160D
| P160E
| P160F
| P1610
| P1611
| P1612
| P1613
| P1614
| P1615
| P1616
| P1617
| P1618
| P1619
| P161A
| P161B
| P161C
| P161D
| P161E
| P161F
| P1620
| P1621
| P1622
| P1623
| P1624
| P1625
| P1626
| P1627
| P1628
| P1629
| P162A
| P162B
| P162C
| P162D
| P162E
| P162F
| P1630
| P1631
| P1632
| P1633
| P1634
| P1635
| P1636
| P1637
| P1638
| P1639
| P163A
| P163B
| P163C
| P163D
| P163E
| P163F
| P1640
| P1641
| P1642
| P1643
| P1644
| P1645
| P1646
| P1647
| P1648
| P1649
| P164A
| P164B
| P164C
| P164D
| P164E
| P164F
| P1650
| P1651
| P1652
| P1653
| P1654
| P1655
| P1656
| P1657
| P1658
| P1659
| P165A
| P165B
| P165C
| P165D
| P165E
| P165F
| P1660
| P1661
| P1662
| P1663
| P1664
| P1665
| P1666
| P1667
| P1668
| P1669
| P166A
| P166B
| P166C
| P166D
| P166E
| P166F
| P1670
| P1671
| P1672
| P1673
| P1674
| P1675
| P1676
| P1677
| P1678
| P1679
| P167A
| P167B
| P167C
| P167D
| P167E
| P167F
| P1680
| P1681
| P1682
| P1683
| P1684
| P1685
| P1686
| P1687
| P1688
| P1689
| P168A
| P168B
| P168C
| P168D
| P168E
| P168F
| P1690
| P1691
| P1692
| P1693
| P1694
| P1695
| P1696
| P1697
| P1698
| P1699
| P169A
| P169B
| P169C
| P169D
| P169E
| P169F
| P16A0
| P16A1
| P16A2
| P16A3
| P16A4
| P16A5
| P16A6
| P16A7
| P16A8
| P16A9
| P16AA
| P16AB
| P16AC
| P16AD
| P16AE
| P16AF
| P16B0
| P16B1
| P16B2
| P16B3
| P16B4
| P16B5
| P16B6
| P16B7
| P16B8
| P16B9
| P16BA
| P16BB
| P16BC
| P16BD
| P16BE
| P16BF
| P16C0
| P16C1
| P16C2
| P16C3
| P16C4
| P16C5
| P16C6
| P16C7
| P16C8
| P16C9
| P16CA
| P16CB
| P16CC
| P16CD
| P16CE
| P16CF
| P16D0
| P16D1
| P16D2
| P16D3
| P16D4
| P16D5
| P16D6
| P16D7
| P16D8
| P16D9
| P16DA
| P16DB
| P16DC
| P16DD
| P16DE
| P16DF
| P16E0
| P16E1
| P16E2
| P16E3
| P16E4
| P16E5
| P16E6
| P16E7
| P16E8
| P16E9
| P16EA
| P16EB
| P16EC
| P16ED
| P16EE
| P16EF
| P16F0
| P16F1
| P16F2
| P16F3
| P16F4
| P16F5
| P16F6
| P16F7
| P16F8
| P16F9
| P16FA
| P16FB
| P16FC
| P16FD
| P16FE
| P16FF
| P1700
| P1701
| P1702
| P1703
| P1704
| P1705
| P1706
| P1707
| P1708
| P1709
| P170A
| P170B
| P170C
| P170D
| P170E
| P170F
| P1710
| P1711
| P1712
| P1713
| P1714
| P1715
| P1716
| P1717
| P1718
| P1719
| P171A
| P171B
| P171C
| P171D
| P171E
| P171F
| P1720
| P1721
| P1722
| P1723
| P1724
| P1725
| P1726
| P1727
| P1728
| P1729
| P172A
| P172B
| P172C
| P172D
| P172E
| P172F
| P1730
| P1731
| P1732
| P1733
| P1734
| P1735
| P1736
| P1737
| P1738
| P1739
| P173A
| P173B
| P173C
| P173D
| P173E
| P173F
| P1740
| P1741
| P1742
| P1743
| P1744
| P1745
| P1746
| P1747
| P1748
| P1749
| P174A
| P174B
| P174C
| P174D
| P174E
| P174F
| P1750
| P1751
| P1752
| P1753
| P1754
| P1755
| P1756
| P1757
| P1758
| P1759
| P175A
| P175B
| P175C
| P175D
| P175E
| P175F
| P1760
| P1761
| P1762
| P1763
| P1764
| P1765
| P1766
| P1767
| P1768
| P1769
| P176A
| P176B
| P176C
| P176D
| P176E
| P176F
| P1770
| P1771
| P1772
| P1773
| P1774
| P1775
| P1776
| P1777
| P1778
| P1779
| P177A
| P177B
| P177C
| P177D
| P177E
| P177F
| P1780
| P1781
| P1782
| P1783
| P1784
| P1785
| P1786
| P1787
| P1788
| P1789
| P178A
| P178B
| P178C
| P178D
| P178E
| P178F
| P1790
| P1791
| P1792
| P1793
| P1794
| P1795
| P1796
| P1797
| P1798
| P1799
| P179A
| P179B
| P179C
| P179D
| P179E
| P179F
| P17A0
| P17A1
| P17A2
| P17A3
| P17A4
| P17A5
| P17A6
| P17A7
| P17A8
| P17A9
| P17AA
| P17AB
| P17AC
| P17AD
| P17AE
| P17AF
| P17B0
| P17B1
| P17B2
| P17B3
| P17B4
| P17B5
| P17B6
| P17B7
| P17B8
| P17B9
| P17BA
| P17BB
| P17BC
| P17BD
| P17BE
| P17BF
| P17C0
| P17C1
| P17C2
| P17C3
| P17C4
| P17C5
| P17C6
| P17C7
| P17C8
| P17C9
| P17CA
| P17CB
| P17CC
| P17CD
| P17CE
| P17CF
| P17D0
| P17D1
| P17D2
| P17D3
| P17D4
| P17D5
| P17D6
| P17D7
| P17D8
| P17D9
| P17DA
| P17DB
| P17DC
| P17DD
| P17DE
| P17DF
| P17E0
| P17E1
| P17E2
| P17E3
| P17E4
| P17E5
| P17E6
| P17E7
| P17E8
| P17E9
| P17EA
| P17EB
| P17EC
| P17ED
| P17EE
| P17EF
| P17F0
| P17F1
| P17F2
| P17F3
| P17F4
| P17F5
| P17F6
| P17F7
| P17F8
| P17F9
| P17FA
| P17FB
| P17FC
| P17FD
| P17FE
| P17FF
| P1800
| P1801
| P1802
| P1803
| P1804
| P1805
| P1806
| P1807
| P1808
| P1809
| P180A
| P180B
| P180C
| P180D
| P180E
| P180F
| P1810
| P1811
| P1812
| P1813
| P1814
| P1815
| P1816
| P1817
| P1818
| P1819
| P181A
| P181B
| P181C
| P181D
| P181E
| P181F
| P1820
| P1821
| P1822
| P1823
| P1824
| P1825
| P1826
| P1827
| P1828
| P1829
| P182A
| P182B
| P182C
| P182D
| P182E
| P182F
| P1830
| P1831
| P1832
| P1833
| P1834
| P1835
| P1836
| P1837
| P1838
| P1839
| P183A
| P183B
| P183C
| P183D
| P183E
| P183F
| P1840
| P1841
| P1842
| P1843
| P1844
| P1845
| P1846
| P1847
| P1848
| P1849
| P184A
| P184B
| P184C
| P184D
| P184E
| P184F
| P1850
| P1851
| P1852
| P1853
| P1854
| P1855
| P1856
| P1857
| P1858
| P1859
| P185A
| P185B
| P185C
| P185D
| P185E
| P185F
| P1860
| P1861
| P1862
| P1863
| P1864
| P1865
| P1866
| P1867
| P1868
| P1869
| P186A
| P186B
| P186C
| P186D
| P186E
| P186F
| P1870
| P1871
| P1872
| P1873
| P1874
| P1875
| P1876
| P1877
| P1878
| P1879
| P187A
| P187B
| P187C
| P187D
| P187E
| P187F
| P1880
| P1881
| P1882
| P1883
| P1884
| P1885
| P1886
| P1887
| P1888
| P1889
| P188A
| P188B
| P188C
| P188D
| P188E
| P188F
| P1890
| P1891
| P1892
| P1893
| P1894
| P1895
| P1896
| P1897
| P1898
| P1899
| P189A
| P189B
| P189C
| P189D
| P189E
| P189F
| P18A0
| P18A1
| P18A2
| P18A3
| P18A4
| P18A5
| P18A6
| P18A7
| P18A8
| P18A9
| P18AA
| P18AB
| P18AC
| P18AD
| P18AE
| P18AF
| P18B0
| P18B1
| P18B2
| P18B3
| P18B4
| P18B5
| P18B6
| P18B7
| P18B8
| P18B9
| P18BA
| P18BB
| P18BC
| P18BD
| P18BE
| P18BF
| P18C0
| P18C1
| P18C2
| P18C3
| P18C4
| P18C5
| P18C6
| P18C7
| P18C8
| P18C9
| P18CA
| P18CB
| P18CC
| P18CD
| P18CE
| P18CF
| P18D0
| P18D1
| P18D2
| P18D3
| P18D4
| P18D5
| P18D6
| P18D7
| P18D8
| P18D9
| P18DA
| P18DB
| P18DC
| P18DD
| P18DE
| P18DF
| P18E0
| P18E1
| P18E2
| P18E3
| P18E4
| P18E5
| P18E6
| P18E7
| P18E8
| P18E9
| P18EA
| P18EB
| P18EC
| P18ED
| P18EE
| P18EF
| P18F0
| P18F1
| P18F2
| P18F3
| P18F4
| P18F5
| P18F6
| P18F7
| P18F8
| P18F9
| P18FA
| P18FB
| P18FC
| P18FD
| P18FE
| P18FF
| P1900
| P1901
| P1902
| P1903
| P1904
| P1905
| P1906
| P1907
| P1908
| P1909
| P190A
| P190B
| P190C
| P190D
| P190E
| P190F
| P1910
| P1911
| P1912
| P1913
| P1914
| P1915
| P1916
| P1917
| P1918
| P1919
| P191A
| P191B
| P191C
| P191D
| P191E
| P191F
| P1920
| P1921
| P1922
| P1923
| P1924
| P1925
| P1926
| P1927
| P1928
| P1929
| P192A
| P192B
| P192C
| P192D
| P192E
| P192F
| P1930
| P1931
| P1932
| P1933
| P1934
| P1935
| P1936
| P1937
| P1938
| P1939
| P193A
| P193B
| P193C
| P193D
| P193E
| P193F
| P1940
| P1941
| P1942
| P1943
| P1944
| P1945
| P1946
| P1947
| P1948
| P1949
| P194A
| P194B
| P194C
| P194D
| P194E
| P194F
| P1950
| P1951
| P1952
| P1953
| P1954
| P1955
| P1956
| P1957
| P1958
| P1959
| P195A
| P195B
| P195C
| P195D
| P195E
| P195F
| P1960
| P1961
| P1962
| P1963
| P1964
| P1965
| P1966
| P1967
| P1968
| P1969
| P196A
| P196B
| P196C
| P196D
| P196E
| P196F
| P1970
| P1971
| P1972
| P1973
| P1974
| P1975
| P1976
| P1977
| P1978
| P1979
| P197A
| P197B
| P197C
| P197D
| P197E
| P197F
| P1980
| P1981
| P1982
| P1983
| P1984
| P1985
| P1986
| P1987
| P1988
| P1989
| P198A
| P198B
| P198C
| P198D
| P198E
| P198F
| P1990
| P1991
| P1992
| P1993
| P1994
| P1995
| P1996
| P1997
| P1998
| P1999
| P199A
| P199B
| P199C
| P199D
| P199E
| P199F
| P19A0
| P19A1
| P19A2
| P19A3
| P19A4
| P19A5
| P19A6
| P19A7
| P19A8
| P19A9
| P19AA
| P19AB
| P19AC
| P19AD
| P19AE
| P19AF
| P19B0
| P19B1
| P19B2
| P19B3
| P19B4
| P19B5
| P19B6
| P19B7
| P19B8
| P19B9
| P19BA
| P19BB
| P19BC
| P19BD
| P19BE
| P19BF
| P19C0
| P19C1
| P19C2
| P19C3
| P19C4
| P19C5
| P19C6
| P19C7
| P19C8
| P19C9
| P19CA
| P19CB
| P19CC
| P19CD
| P19CE
| P19CF
| P19D0
| P19D1
| P19D2
| P19D3
| P19D4
| P19D5
| P19D6
| P19D7
| P19D8
| P19D9
| P19DA
| P19DB
| P19DC
| P19DD
| P19DE
| P19DF
| P19E0
| P19E1
| P19E2
| P19E3
| P19E4
| P19E5
| P19E6
| P19E7
| P19E8
| P19E9
| P19EA
| P19EB
| P19EC
| P19ED
| P19EE
| P19EF
| P19F0
| P19F1
| P19F2
| P19F3
| P19F4
| P19F5
| P19F6
| P19F7
| P19F8
| P19F9
| P19FA
| P19FB
| P19FC
| P19FD
| P19FE
| P19FF
| P1A00
| P1A01
| P1A02
| P1A03
| P1A04
| P1A05
| P1A06
| P1A07
| P1A08
| P1A09
| P1A0A
| P1A0B
| P1A0C
| P1A0D
| P1A0E
| P1A0F
| P1A10
| P1A11
| P1A12
| P1A13
| P1A14
| P1A15
| P1A16
| P1A17
| P1A18
| P1A19
| P1A1A
| P1A1B
| P1A1C
| P1A1D
| P1A1E
| P1A1F
| P1A20
| P1A21
| P1A22
| P1A23
| P1A24
| P1A25
| P1A26
| P1A27
| P1A28
| P1A29
| P1A2A
| P1A2B
| P1A2C
| P1A2D
| P1A2E
| P1A2F
| P1A30
| P1A31
| P1A32
| P1A33
| P1A34
| P1A35
| P1A36
| P1A37
| P1A38
| P1A

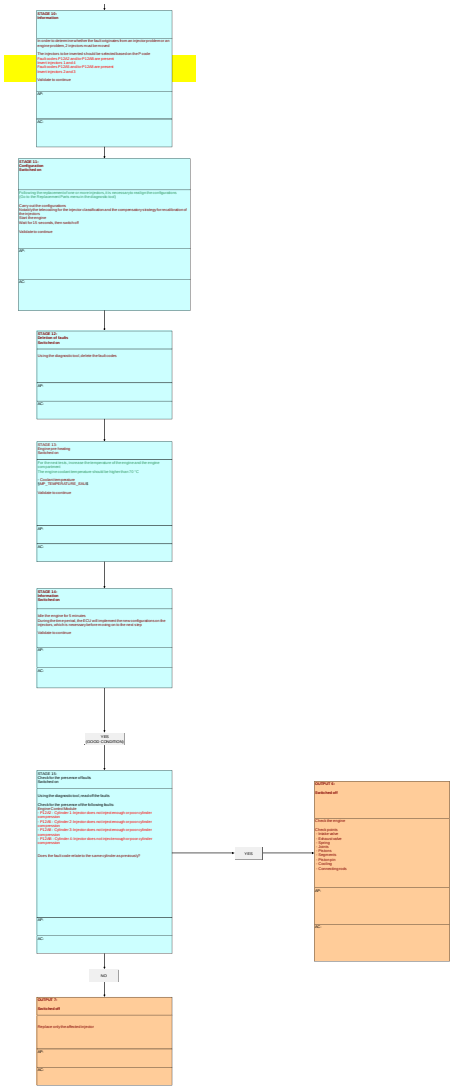
STAGE 10:
Information
In order to determine whether the fault originates from an injection problem or an engine problem, 3 injection must be erased.
The injectors to be inserted should be selected based on the P code
Fault codes P1126 and/or P1268 are present
Erase injection 1 and 2
Fault codes P1245 and/or P1268 are present
Insert injectors 1 and 2
Validate to continue
AP:
AC:
STAGE 11:
Configuration
Switched on
Following the replacement of one or more injectors, it is necessary to realign the configurations. (Go to the Replacement Parts menu in the diagnostic tool)
Carry out the configurations
Reminder: When carrying the the injector classification and the compensatory cranking for recalibration of the injectors
Wait for 15 seconds, then switch off
Validate to continue
AP:
AC:
STAGE 12:
Erase fault codes
Switched on
Using the diagnostic tool, delete the fault codes
AP:
AC:
STAGE 13:
Engine cooling
Switched on
For the next step, reverse the temperature of the engine and the engine compartment
The engine coolant temperature should be higher than 70 °C
Correct temperature
(ENP_TEMPERATURE_RAIL)
Validate to continue
AP:
AC:
STAGE 14:
Information
Switched on
Idle the engine for 5 minutes
During the time period, the ECU will implement the new configuration on the injectors, which is necessary before erasing can to the next step
Validate to continue
AP:
AC:
YES
(GOOD CONDITION)
STAGE 15:
Check for presence of faults
Switched on
Using the diagnostic tool, read out the faults
Check for the presence of the following faults:
Engine Control Module
- P1126 - Cylinder 1: Injector does not inject enough or poor cylinder compensation
- P1246 - Cylinder 2: Injector does not inject enough or poor cylinder compensation
- P1245 - Cylinder 3: Injector does not inject enough or poor cylinder compensation
- P1268 - Cylinder 4: Injector does not inject enough or poor cylinder compensation
Does the fault code relate to the same cylinder as previously?
AP:
AC:
YES
OUTPUT 6:
Switched off
Check the engine
Check points
- Air intake
- Exhaust outlet
- Valves
- Spring
- Pistons
- Connections
- Piston pin
- Cowling
- Connecting rods
AP:
AC:
NO
OUTPUT 7:
Switched off
Replace only the affected injector
AP:
AC:

INFORMATION : FAULT CODE P12AA (ENGINE MANAGEMENT ECU)

SPECIAL FEATURE :

FOR : 1CB7 - B0FBM : DV6C TURBO DIESEL

FOR : 1CX7 - B0FBM : DV6C TURBO DIESEL

FOR : 1C58 - B0FBM : DV6C TURBO DIESEL

FOR : 1PT7 - B0FBM : DV6C TURBO DIESEL

FOR : 1PW2 - B0FBM : DV6C TURBO DIESEL

FOR : 1CB8 - B0FBM : DV6C TURBO DIESEL

FOR : 1CXA - B0FBM : DV6C TURBO DIESEL

FOR : 1CYA - B0FBM : DV6C TURBO DIESEL

FOR : 1PTB - B0FBM : DV6C TURBO DIESEL

FOR : 1PTC - B0FBM : DV6C TURBO DIESEL

FOR : 1PIA - B0FBM : DV6C TURBO DIESEL

FOR : 1CMJ - B0FBM : DV6C TURBO DIESEL

FOR : 1PMJ - B0FBM : DV6C TURBO DIESEL

Engine ECU CONTINENTAL SID 807 branch 2	
Fault code	P12AA
After sales description of the fault code	No. 4 cylinder : Injector injects too much or remains jammed in the open position
Description of the diagnostics	The correction made to the fuel flow drift of injector 4 is higher than the maximum threshold
Conditions of activation of the diagnostics	At least one of the following conditions must be fulfilled - Ignition on - Engine running
Conditions of disappearance of the fault	Driving for 5 minutes
	Closing of the EGR (exhaust gas recycling) valve
	Reversible deactivation of the vehicle speed limiter
	Reversible deactivation of the vehicle cruise control
	Deactivation of taking account of the tight spot information

Down-grade modes if fault present	Cutting of fuel injector 4
	Switching to fuel "normal reduced flow" mode
	Deactivation of the request for regeneration of the particle filter from the diagnostic tool
	Deactivation of the "easy-move" (electric parking brake) functionality
	Function for limitation of the static torque for the protection of the gearbox
	Switching of the turbocharging pressure regulation to controlled mode
Switching on of the warning lamp and/or warning message	Warning lamp MIL
	"SERVICE" warning lamp
Main customer complaints likely	Jerking/stalling
	Engine acceleration at wrong time
	Noise
	Slightly higher fuel consumption
	Starting problem
	Smoke from the exhaust
	Lack of power
Suspect areas	Fuel injector 4
	Injector classification
	Fuel return

Fault code(s): P12A1 or P12A4 or P12A7 or P12AA

Reminder DTC

DTC no.	Alternative text of the DTC	Do not fill in this section for the FLOW CHART phase: Fault found	Conditions for fault finding	Discognated mode after a fault is memorised	Lamp on / off	Suspected areas Major control steps	The client offers(Diplomat only) associated with the DTCs	Fault code(s) to be dealt with before working through this flow chart	Tools required
P12A1	Injector 1: Injector injecting too much or injected blocked open. (Engine Mixer)								
P12A4	Injector 2: Injector injecting too much or injected blocked open. (Engine Mixer)								
P12A7	Injector 3: Injector injecting too much or injected blocked open. (Engine Mixer)								
P12AA	Injector 4: Injector injecting too much or injected blocked open. (Engine Mixer)								

PRE-CHECK

FLOW CHART Test procedure

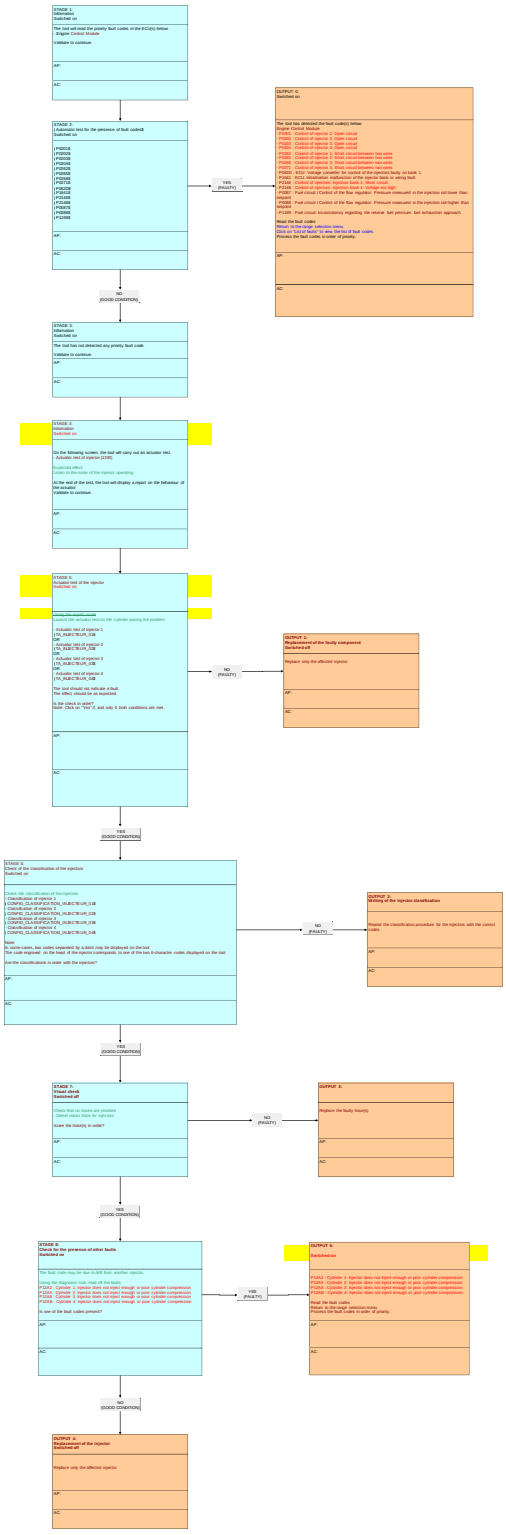

INFORMATION : FAULT CODE P12AB (ENGINE MANAGEMENT ECU)

SPECIAL FEATURE :

FOR : 1CB7 - B0FBM : DV6C TURBO DIESEL

FOR : 1CX7 - B0FBM : DV6C TURBO DIESEL

FOR : 1C58 - B0FBM : DV6C TURBO DIESEL

FOR : 1PT7 - B0FBM : DV6C TURBO DIESEL

FOR : 1PW2 - B0FBM : DV6C TURBO DIESEL

FOR : 1CB8 - B0FBM : DV6C TURBO DIESEL

FOR : 1CXA - B0FBM : DV6C TURBO DIESEL

FOR : 1CYA - B0FBM : DV6C TURBO DIESEL

FOR : 1PTB - B0FBM : DV6C TURBO DIESEL

FOR : 1PTC - B0FBM : DV6C TURBO DIESEL

FOR : 1PIA - B0FBM : DV6C TURBO DIESEL

FOR : 1CMJ - B0FBM : DV6C TURBO DIESEL

FOR : 1PMJ - B0FBM : DV6C TURBO DIESEL

Engine ECU CONTINENTAL SID 807 branch 2	
Fault code	P12AB
After sales description of the fault code	No. 4 cylinder : Injector not injecting enough, or poor cylinder compression
Description of the diagnostics	The correction made to the fuel flow drift of injector 4 is below the minimum threshold
Conditions of activation of the diagnostics	Engine running at idle
Conditions of disappearance of the fault	Driving for 5 minutes
Down-grade modes	Closing of the EGR (exhaust gas recycling) valve
	Reversible deactivation of the vehicle speed limiter
	Reversible deactivation of the vehicle cruise control
	Switching of the turbocharging pressure regulation to controlled mode
	Deactivation of the request for regeneration of the particle

if fault present	filter from the diagnostic tool
	Function for limitation of the static torque for the protection of the gearbox
	Deactivation of the "easy-move" (electric parking brake) functionality
	Deactivation of taking account of the tight spot information
Switching on of the warning lamp and/or warning message	Warning lamp MIL
Main customer complaints likely	Lack of power
	Noise
	Jerking/stalling
	Starting problem
	Malfunctioning of the idle
	Absence of automatic stopping of the internal combustion engine (Vehicle equipped with "stop and start")
	Problem with automatic restarting of the internal combustion engine (Vehicle equipped with "stop and start")
	Smoke from the exhaust
	Engine acceleration at wrong time
	Slightly higher fuel consumption
Suspect areas	Fuel injector 4
	Poor quality of the fuel or type of fuel
	Fuel return
	Inlet valve - Exhaust valve - spring - seal
	Piston - Segment - Shaft - Cooling system
	Conrods

Fault code(s): P12A2 or P12A5 or P12A8 or P12AB

Reminder DTC

Do not fill in this section for the FLOW CHART phase

DTC Key	Alternative text of the DTC	Fault code	Conditions for fault finding	Deregulated mode after a fault is ascertained	Illuminated warning light on the dash	Suspected areas Major control steps	The client effect(s) (symptom(s)) associated with the DTC's	Fault code(s) to be dealt with before working through this flow chart	Tools required
P12A2	Injector 1: Injector does not inject enough or poor cylinder compression								
P12A5	Injector 2: Injector does not inject enough or poor cylinder compression								
P12A8	Injector 3: Injector does not inject enough or poor cylinder compression				Yes				
P12AB	Injector 4: Injector does not inject enough or poor cylinder compression								

PRE-CHECK

FLOW CHART Test procedure

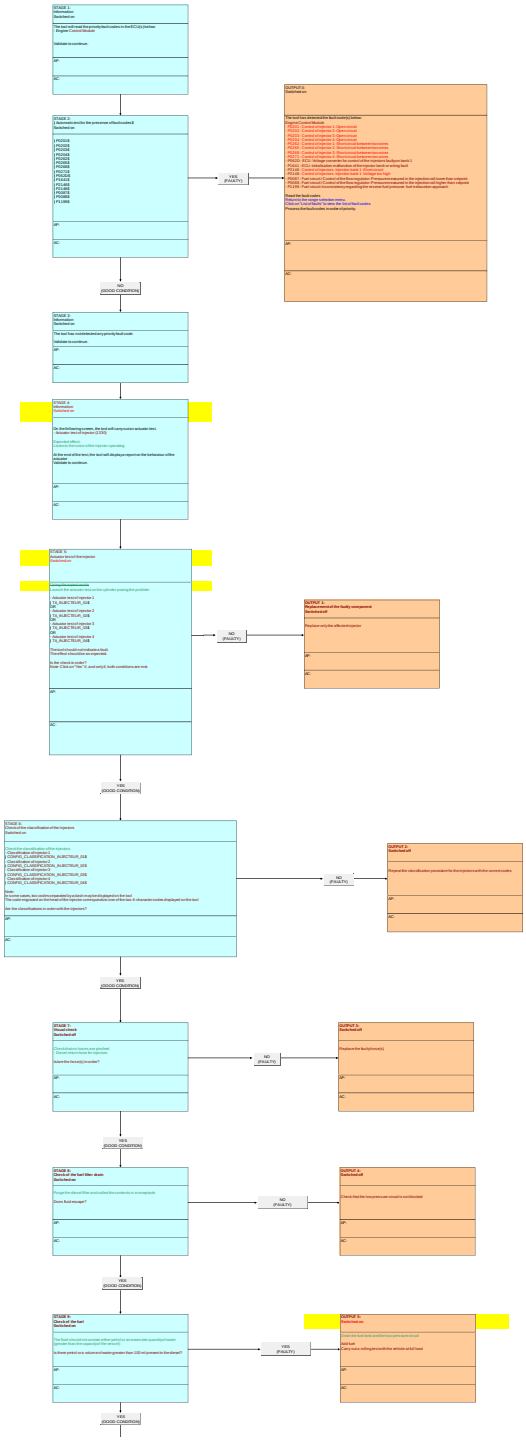

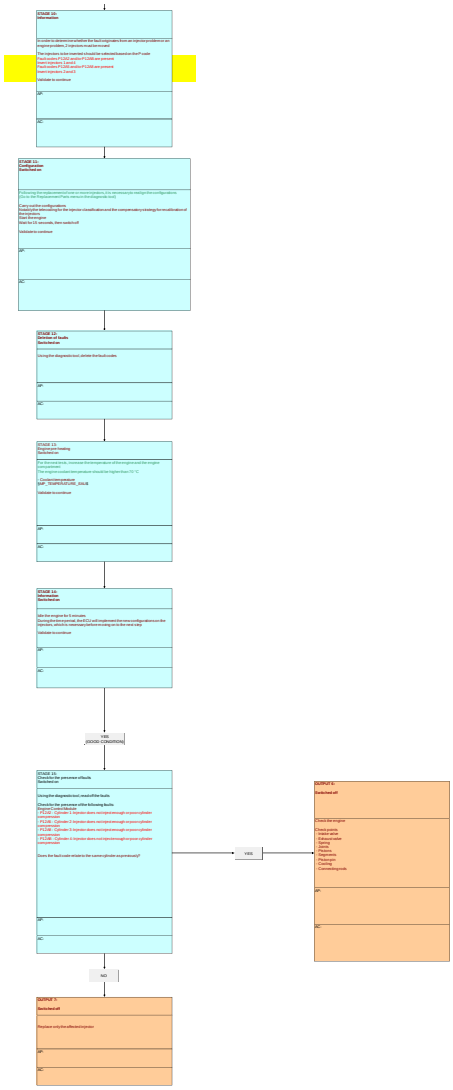
STAGE 10:
Information
In order to determine whether the fault originates from an injection problem or an engine problem, 3 injectors must be moved
The injectors to be inverted should be selected based on the P code
Fault codes P1126 and/or P1268 are present:
Invert injectors 1 and 4
Fault codes P1245 and/or P1268 are present:
Invert injectors 2 and 3
Validate to continue
AP:
AC:
STAGE 11:
Configuration
Switched on
Following the replacement of one or more injectors, it is necessary to realign the configurations.
Go to the Replacement Parts menu in the diagnostic tool)
Carry out the configurations
Reset the values relating to the injector classification and the compensatory cranking for recalibration of the injectors
Start
Wait for 15 seconds, then switch off
Ignition to continue
AP:
AC:
STAGE 12:
Clearing of fault
Switched on
Using the diagnostic tool, delete the fault codes
AP:
AC:
STAGE 13:
Engine cooling
Switched on
For the next steps, measure the temperature of the engine and the engine compartment
The engine coolant temperature should be higher than 70 °C
Correct temperature
ENP_TEMPERATURE_VALID
Validate to continue
AP:
AC:
STAGE 14:
Information
Switched on
Idle the engine for 5 minutes
During the time period, the ECU will implement the new configuration on the injectors, which is necessary before moving on to the next step
Validate to continue
AP:
AC:
YES
(GOOD CONDITION)
STAGE 15:
Check for presence of faults
Switched on
Using the diagnostic tool, read out the faults
Check for the presence of the following faults:
Engine Control Module
- P1126 - Cylinder 1 injector does not inject enough or poor cylinder compensation
- P1245 - Cylinder 2 injector does not inject enough or poor cylinder compensation
- P1246 - Cylinder 3 injector does not inject enough or poor cylinder compensation
- P1268 - Cylinder 4 injector does not inject enough or poor cylinder compensation
Does the fault code relate to the same cylinder as previously?
AP:
AC:
YES
OUTPUT 6:
Switched off
Check the engine
Check points
- Air intake
- Exhaust outlet
- Valves
- Spring
- Pistons
- Connections
- Piston pin
- Cowling
- Connecting rods
AP:
AC:
NO
OUTPUT 7:
Switched off
Replace only the affected injector
AP:
AC:

INFORMATION : FAULT CODE P12B3 (ENGINE MANAGEMENT ECU)

SPECIAL FEATURE :

FOR : 1CB7 - B0FBM : DV6C TURBO DIESEL

FOR : 1CX7 - B0FBM : DV6C TURBO DIESEL

FOR : 1C58 - B0FBM : DV6C TURBO DIESEL

FOR : 1PT7 - B0FBM : DV6C TURBO DIESEL

FOR : 1PW2 - B0FBM : DV6C TURBO DIESEL

FOR : 1CB8 - B0FBM : DV6C TURBO DIESEL

FOR : 1CXA - B0FBM : DV6C TURBO DIESEL

FOR : 1CYA - B0FBM : DV6C TURBO DIESEL

FOR : 1PTB - B0FBM : DV6C TURBO DIESEL

FOR : 1PTC - B0FBM : DV6C TURBO DIESEL

FOR : 1PIA - B0FBM : DV6C TURBO DIESEL

FOR : 1CMJ - B0FBM : DV6C TURBO DIESEL

FOR : 1PMJ - B0FBM : DV6C TURBO DIESEL

Engine ECU CONTINENTAL SID 807 branch 2	
Fault code	P12B3
After sales description of the fault code	EGR valve : Position incorrect (too open) (Service)
Description of the diagnostics	The position measured is less than the reference by more than 10 % for 5 seconds
Conditions of activation of the diagnostics	engine running
Conditions of disappearance of the fault	Driving for 5 minutes remaining under an engine speed of 4000 rpm at half load
Down-grade modes if fault present	-
Switching on of the warning lamp and/or warning message	-

Main customer complaints likely	Jerking/stalling
	Smoke from the exhaust
	Lack of power
	Noise
	Starting problem
	Problem with automatic restarting of the internal combustion engine (Vehicle equipped with "stop and start")
Suspect areas	Exhaust gas recycling valve
	Electrical harness
	Connectors

Fault code(s): P0489 or P12B3 or P1162

Reminder DTC

Do not fill in this section for the FLOW CHART phase

DTC no.	Aftersales text of the DTC	Type 1 or 2	Conditions for fault finding	Downgraded mode after a fault is memorised	Driver Warning Light	Suspected areas Major control loops	The client effects(s)/symptom(s) associated with the DTCs	Fault code(s) to be dealt with before working through this flow chart	Tools required
P0489	EGR valve: Incorrect position (too open)	A							
P12B3	EGR valve: Incorrect position (too open) (aftersales)	A							
P1162	EGR valve: Blocked open	A							

PRE-CHECK
FLOW CHART Test procedure

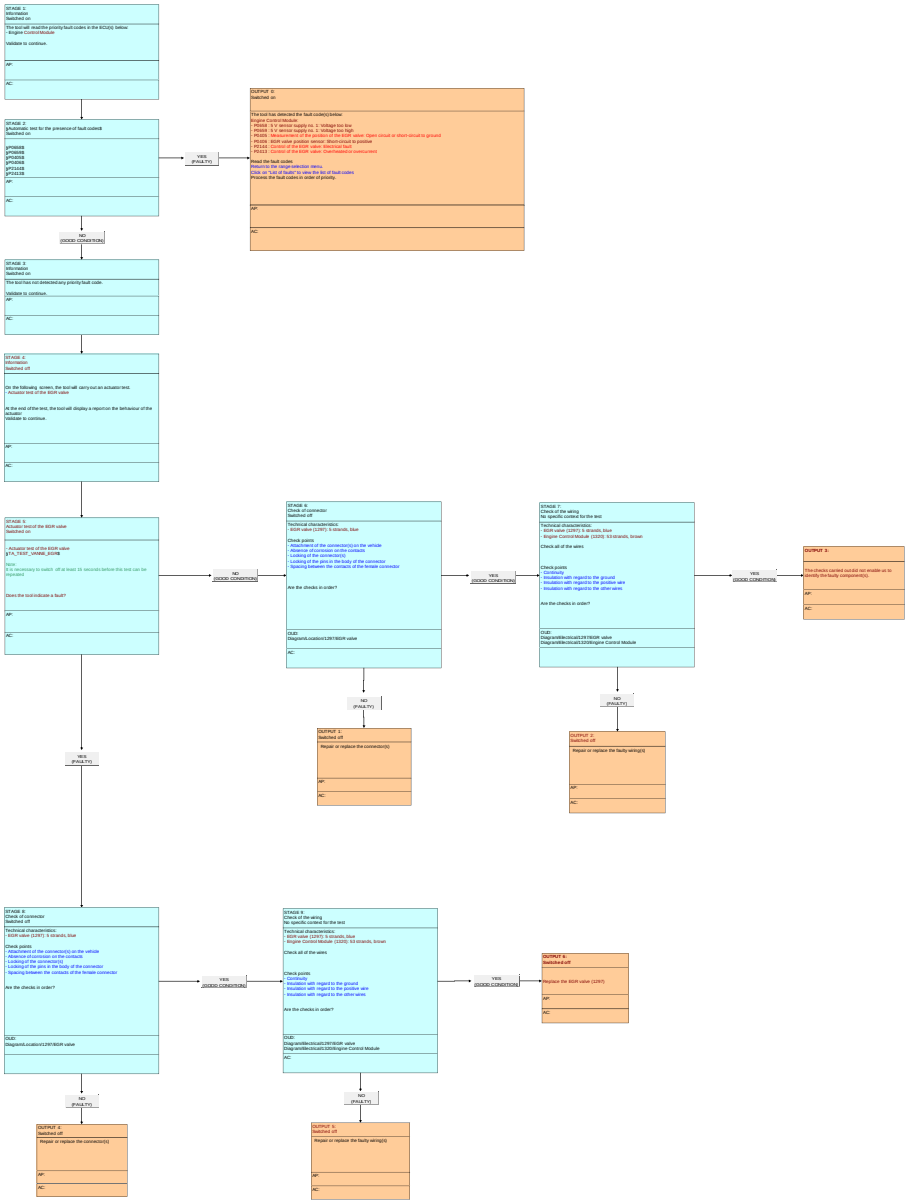

INFORMATION : FAULT CODE P12B4 (ENGINE MANAGEMENT ECU)

SPECIAL FEATURE :

FOR : 1CB7 - B0FBM : DV6C TURBO DIESEL

FOR : 1CX7 - B0FBM : DV6C TURBO DIESEL

FOR : 1C58 - B0FBM : DV6C TURBO DIESEL

FOR : 1PT7 - B0FBM : DV6C TURBO DIESEL

FOR : 1PW2 - B0FBM : DV6C TURBO DIESEL

FOR : 1CB8 - B0FBM : DV6C TURBO DIESEL

FOR : 1CXA - B0FBM : DV6C TURBO DIESEL

FOR : 1CYA - B0FBM : DV6C TURBO DIESEL

FOR : 1PTB - B0FBM : DV6C TURBO DIESEL

FOR : 1PTC - B0FBM : DV6C TURBO DIESEL

FOR : 1PIA - B0FBM : DV6C TURBO DIESEL

FOR : 1CMJ - B0FBM : DV6C TURBO DIESEL

FOR : 1PMJ - B0FBM : DV6C TURBO DIESEL

Engine ECU CONTINENTAL SID 807 branch 2	
Fault code	P12B4
After sales description of the fault code	EGR valve : Position incorrect (too closed) (Service)
Description of the diagnostics	The position measured is greater than the reference by more than 40 % for 5 seconds
Conditions of activation of the diagnostics	engine running
Conditions of disappearance of the fault	Driving for 5 minutes remaining under an engine speed of 4000 rpm at half load
Down-grade modes if fault present	-
Switching on of the warning lamp and/or warning message	-

Main customer complaints likely	Jerking/stalling
	Smoke from the exhaust
	Lack of power
	Noise
	Slightly higher fuel consumption
	Absence of automatic stopping of the internal combustion engine (Vehicle equipped with "stop and start")
	Problem with automatic restarting of the internal combustion engine (Vehicle equipped with "stop and start")
Suspect areas	Exhaust gas recycling valve
	Particle filter overloaded
	Electrical harness
	Connectors

Fault code(s): P0490 or P12B4 or P0409

Remember DTC

the red DTC in RED mentioned on the FLOW CHART please

DTC no.	Alternative text of the DTC	P or B type	Conditions for fault finding	Downgraded areas when DTC is encountered	Priority order	Suspected areas Major control stages	The silent effect/symptom(s) encountered with the DTC(s)	Fault code(s) to be dealt with before attempting to repair this fault code:	Tools required
P0490	EGR valve: Incorrect position (low closed)	P			1st				
P0409	EGR valve: Incorrect position (low closed) (alternative)	P			2nd				
P0409	EGR valve: Valve blocked closed	P			3rd				

PRECHECK

FLOW CHART Test procedure

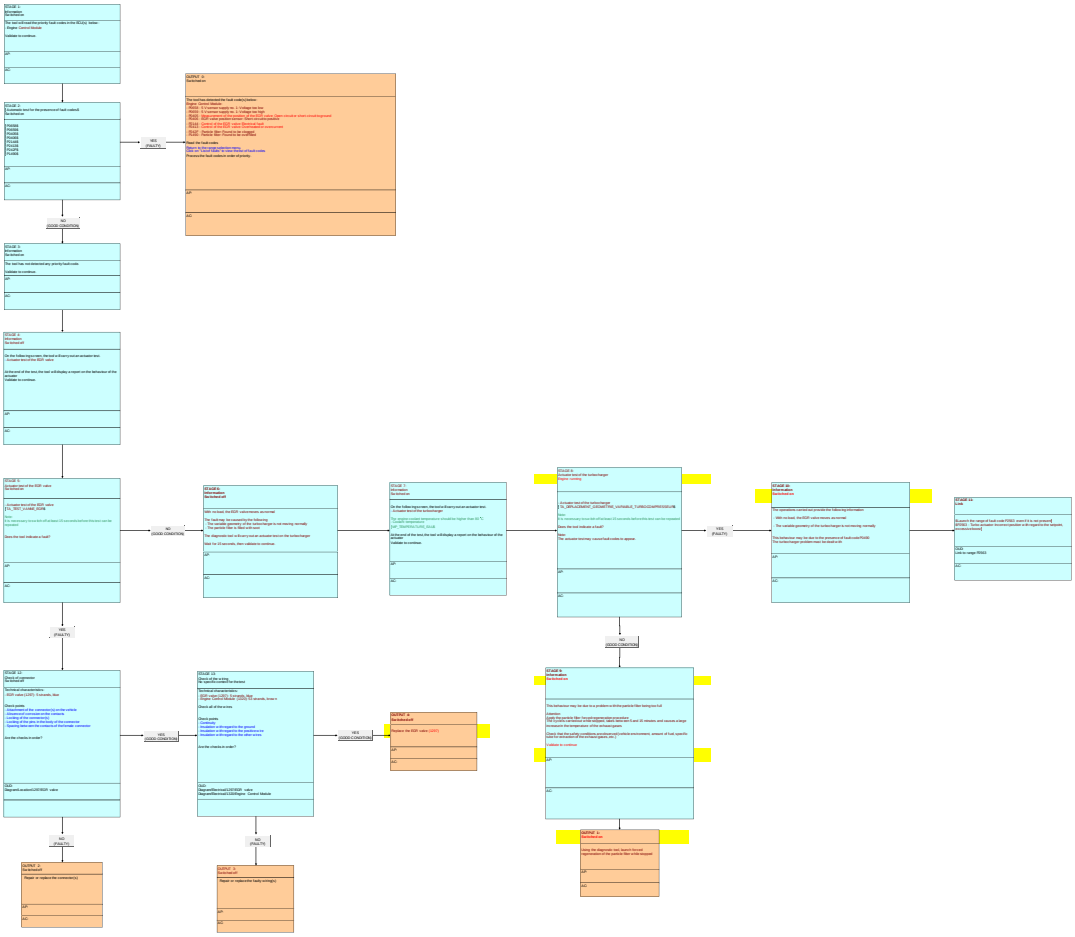

INFORMATION : FAULT CODE P1349 (ENGINE MANAGEMENT ECU)

SPECIAL FEATURE :

FOR : 1CB7 - B0FBM : DV6C TURBO DIESEL

FOR : 1CX7 - B0FBM : DV6C TURBO DIESEL

FOR : 1C58 - B0FBM : DV6C TURBO DIESEL

FOR : 1PT7 - B0FBM : DV6C TURBO DIESEL

FOR : 1PW2 - B0FBM : DV6C TURBO DIESEL

FOR : 1CB8 - B0FBM : DV6C TURBO DIESEL

FOR : 1CXA - B0FBM : DV6C TURBO DIESEL

FOR : 1CYA - B0FBM : DV6C TURBO DIESEL

FOR : 1PTB - B0FBM : DV6C TURBO DIESEL

FOR : 1PTC - B0FBM : DV6C TURBO DIESEL

FOR : 1PIA - B0FBM : DV6C TURBO DIESEL

FOR : 1CMJ - B0FBM : DV6C TURBO DIESEL

FOR : 1PMJ - B0FBM : DV6C TURBO DIESEL

Engine ECU CONTINENTAL SID 807 branch 2	
Fault code	P1349
After sales description of the fault code	Engine preheating : Short circuit to positive or open circuit on the relay control
Description of the diagnostics	Electrical fault detected for 5 s
Conditions of activation of the diagnostics	Ignition switched on
Conditions of disappearance of the fault	Engine started from cold 10 times in succession
Down-grade modes if fault present	-
Switching on of the warning lamp and/or warning message	-

Main customer complaints likely	Starting problem
	Smoke from the exhaust
	Noise
	Malfunctioning of the idle
	Engine hesitation / stalling
	Absence of automatic stopping of the internal combustion engine (Vehicle equipped with "stop and start")
	Problem with automatic restarting of the internal combustion engine (Vehicle equipped with "stop and start")
Suspect areas	Pre-post heating relay
	Pre-heat glow plugs
	Fuse
	Electrical harness
	Connectors

Fault code(s): P1349 or P1350 or P1352

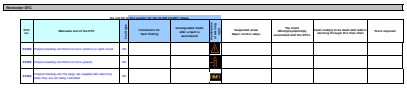

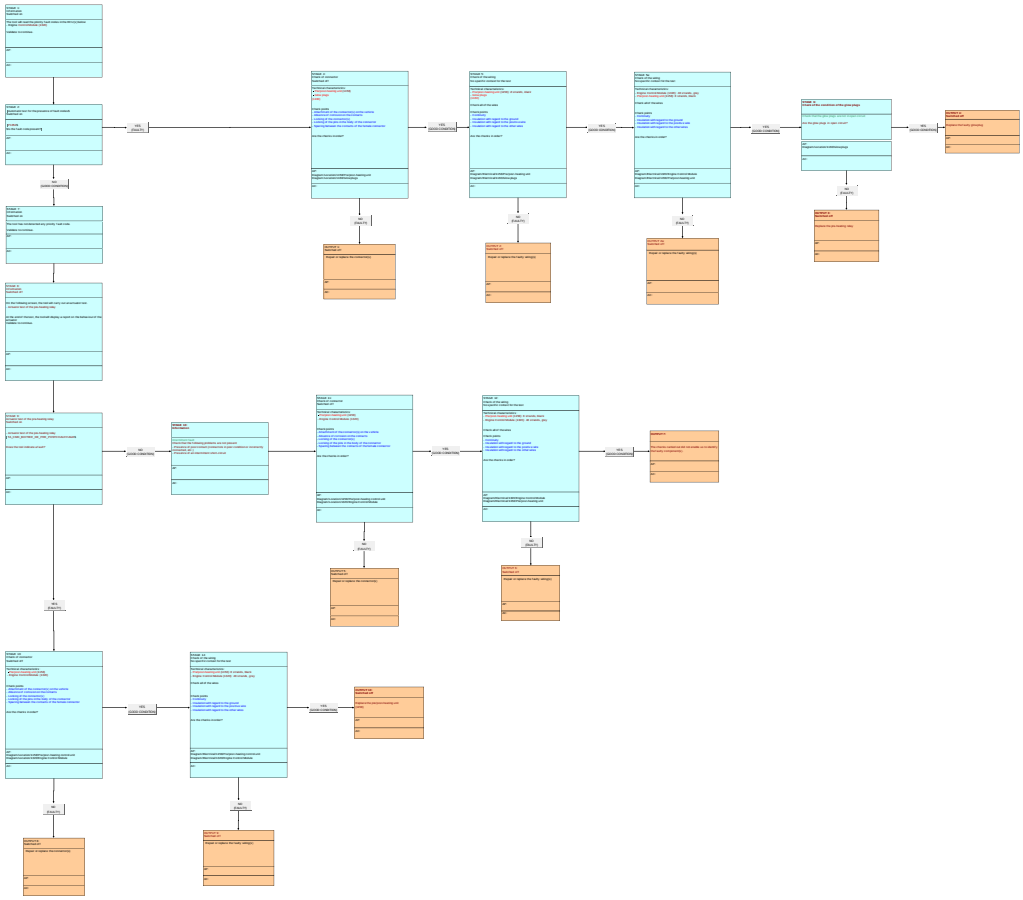

INFORMATION : FAULT CODE P1350 (ENGINE MANAGEMENT ECU)

SPECIAL FEATURE :

FOR : 1CMJ - B0FBM : DV6C TURBO DIESEL

FOR : 1PMJ - B0FBM : DV6C TURBO DIESEL

Engine ECU CONTINENTAL SID 807 branch 2	
Fault code	P1350
After sales description of the fault code	Engine preheating : Short circuit to earth on the relay control
Description of the diagnostics	Electrical fault detected for 2 seconds
Conditions of activation of the diagnostics	Ignition on
Conditions of disappearance of the fault	Engine started from cold 10 times in succession
Down-grade modes if fault present	-
Switching on of the warning lamp and/or warning message	Warning lamp MIL
	"SERVICE" warning lamp
Main customer complaints likely	Noise
	Malfunctioning of the idle
	Starting problem
	Engine hesitation / stalling
	Absence of automatic stopping of the internal combustion engine (Vehicle equipped with "stop and start")
	Problem with automatic restarting of the internal combustion engine (Vehicle equipped with "stop and start")
Suspect areas	Pre-post heating relay
	Preheater plugs
	Electrical harness
	Connectors

Fault code(s): P1349 or P1350 or P1352

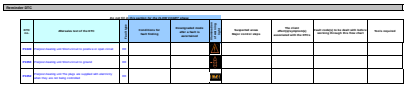

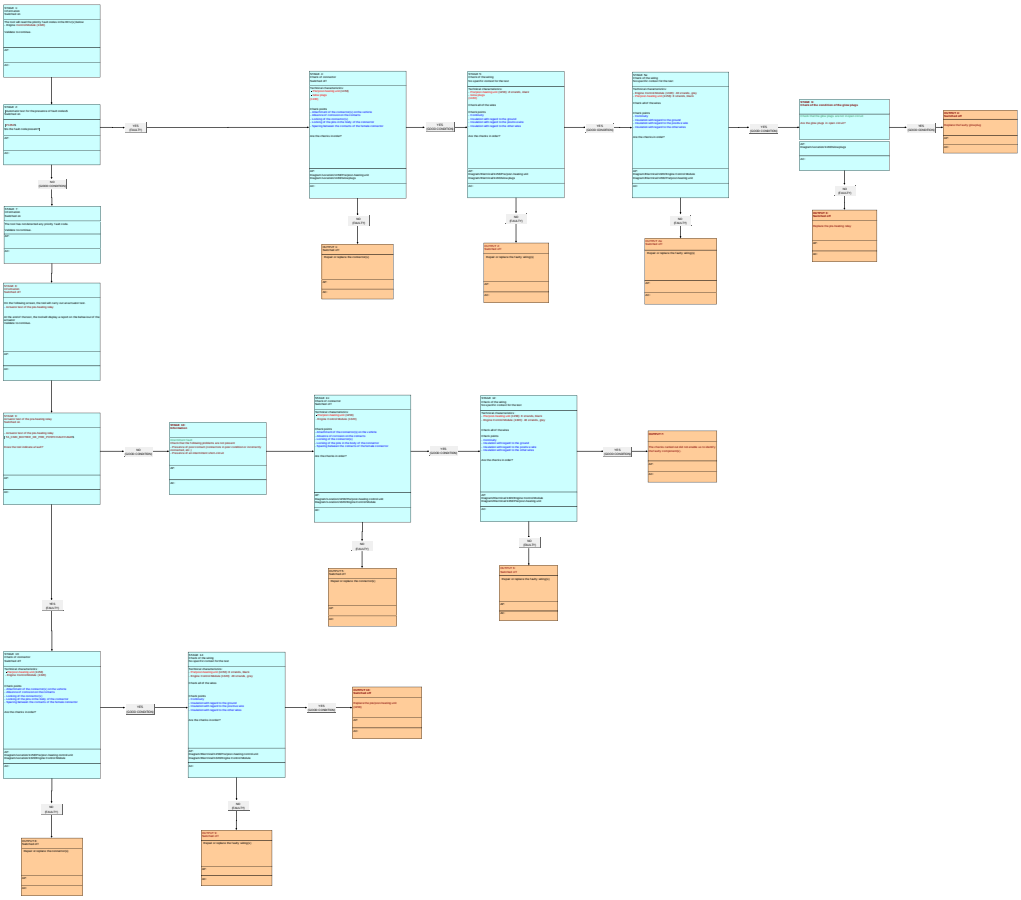

INFORMATION : FAULT CODE P1352 (ENGINE MANAGEMENT ECU)

SPECIAL FEATURE :

FOR : 1CMJ - B0FBM : DV6C TURBO DIESEL

FOR : 1PMJ - B0FBM : DV6C TURBO DIESEL

Engine ECU CONTINENTAL SID 807 branch 2	
Fault code	P1352
After sales description of the fault code	Engine preheating : Fault on the pre-heating relay or glow plugs
Description of the diagnostics	Electrical fault detected for 2 s
Conditions of activation of the diagnostics	Ignition on
Conditions of disappearance of the fault	Engine started from cold 10 times in succession
Down-grade modes if fault present	-
Switching on of the warning lamp and/or warning message	Warning lamp MIL
Main customer complaints likely	Starting problem
	Jerking/stalling
	Noise
	Malfunctioning of the idle
	Absence of automatic stopping of the internal combustion engine (Vehicle equipped with "stop and start")
	Problem with automatic restarting of the internal combustion engine (Vehicle equipped with "stop and start")
Suspect areas	Pre-post heating relay
	Preheater plugs
	Fuse
	Electrical harness
	Connectors

Fault code(s): P1349 or P1350 or P1352

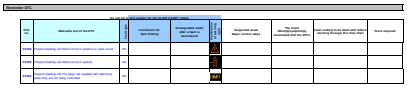

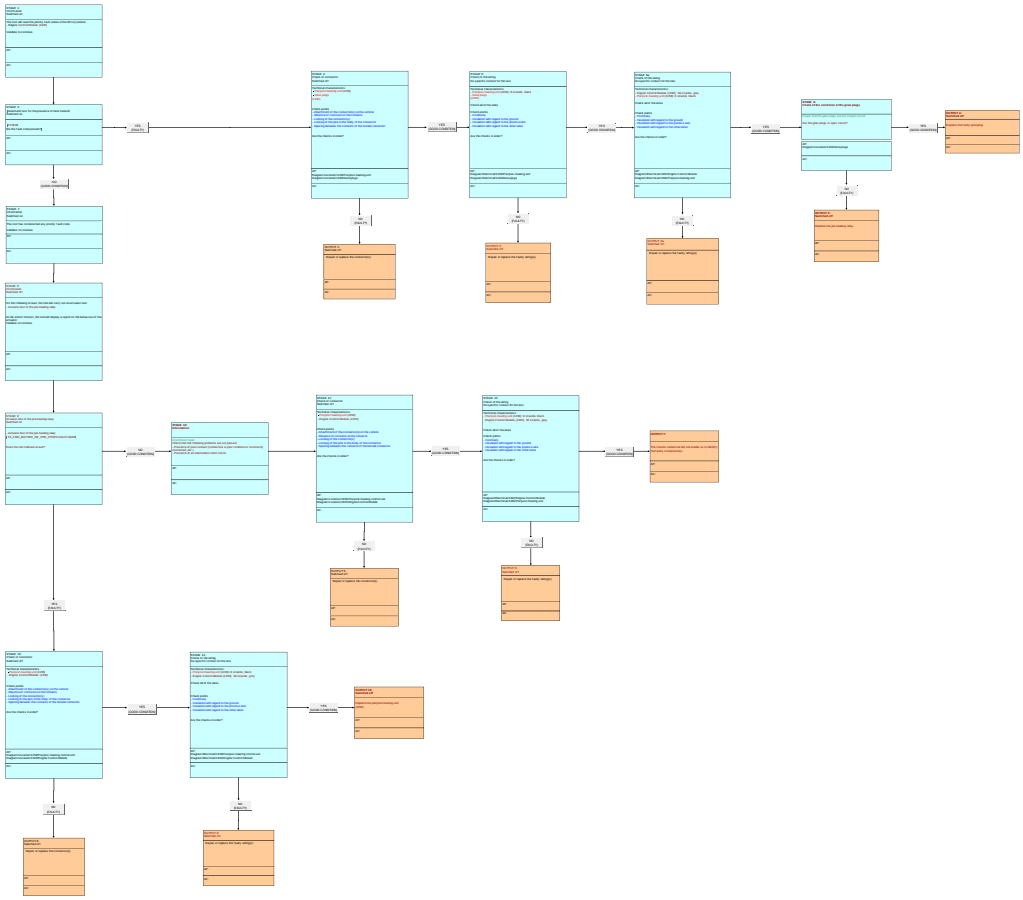

INFORMATION : FAULT CODE P1412 (ENGINE ECU)

SPECIAL FEATURE :

FOR : 1CMJ - B0FBM : DV6C TURBO DIESEL

FOR : 1PMJ - B0FBM : DV6C TURBO DIESEL

Engine ECU CONTINENTAL SID 807 branch 2	
Fault code	P1412
After sales description of the fault code	Particle filter : Engine reconfiguration activated following an electrical fault of the measurement of the differential pressure sensor or of the measurement of the particle emission filter temperature
Description of the diagnostics	Electrical fault on the particle filter upstream temperature sensor detected for 8 hours, causing a reduced flow on the injection
Conditions of activation of the diagnostics	Engine running
Conditions of disappearance of the fault	Driving for 5 minutes
Down-grade modes if fault present	Closing of the EGR (exhaust gas recycling) valve
	Irreversible deactivation of the vehicle speed limiter
	Irreversible deactivation of the vehicle cruise control
	Deactivation of taking account of the tight spot information
	Switching of the turbocharging pressure regulation to controlled mode
	Switching to fuel "normal reduced flow" mode
	Deactivation of the request for regeneration of the particle filter from the diagnostic tool
	Sending of the information "torque uncertain" on the CAN network
	For a gearbox with engine speed regulation (automatic gearbox or piloted manual gearbox), limitation of the torque sent to the gearbox
Switching on of the warning lamp and/or warning message	Warning lamp MIL
	"SERVICE" warning lamp
Main customer complaints likely	No effects immediately perceptible to the customer
Suspect areas	Particle filter upstream temperature sensor
	Particle filter differential pressure sensor
	Electrical harnesses
	Connectors

Fault code(s): P1412

Reminder DTC

Do not fill in this section for the FLOW CHART phase

DTC no.	Aftersales text of the DTC	Fault type	Conditions for fault finding	Downgraded mode after a fault is ascertained	Illumination of warning light	Suspected areas Major control steps	The client effect(s)/symptom(s) associated with the DTCs	Fault code(s) to be dealt with before working through this flow chart	Tools required
P1412	Temperature sensor upstream of particle filter or particle filter differential pressure sensor: Engine reconfiguration activated following an electrical or operational fault	EE							

PRE-CHECK

FLOW CHART Test procedure

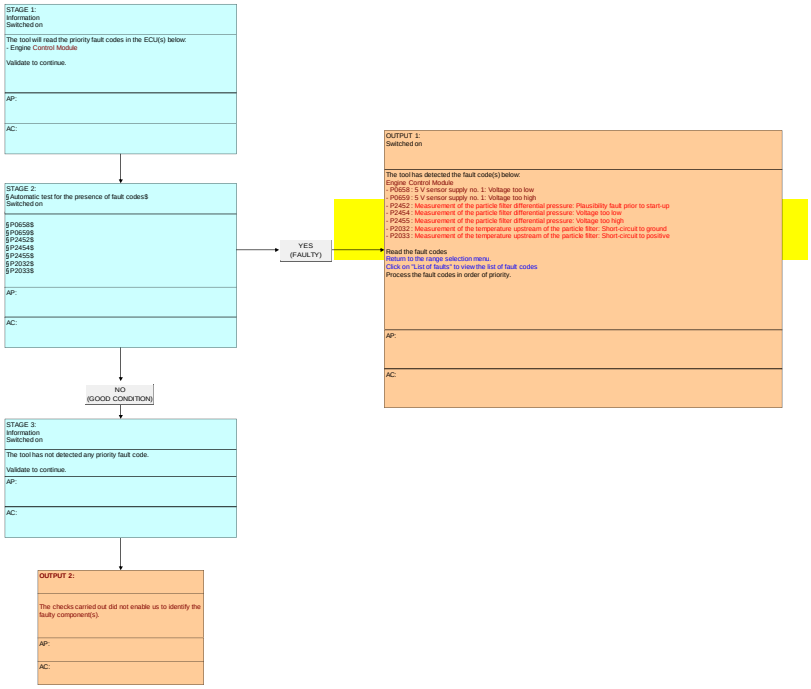

INFORMATION : FAULT CODE P1442 (ENGINE ECU)

SPECIAL FEATURE :

FOR : 1CMJ - B0FBM : DV6C TURBO DIESEL

FOR : 1PMJ - B0FBM : DV6C TURBO DIESEL

Engine ECU CONTINENTAL SID 807 branch 2	
Fault code	P1442
After sales description of the fault code	Control of the additive pump by wire : Open circuit
Description of the diagnostics	Electrical fault detected for 1 s
Conditions of activation of the diagnostics	engine running
Conditions of disappearance of the fault	The following conditions have to be met - Addition of 10 litres of fuel - Driving with the engine hot for 5 minutes
Down-grade modes if fault present	Deactivation of the request for regeneration of the particle filter from the diagnostic tool
	Switching to fuel "normal reduced flow" mode
Switching on of the warning lamp and/or warning message	"SERVICE" warning lamp
Main customer complaints likely	Starting problem
	Lack of power
Suspect areas	Additive pump TI
	Additive pump MGI
	Fuse
	Electrical harnesses
	Connectors

Fault code(s): P1442 or P1443 or P1444

Reminder DTC

Do not erase the DTCs memory before the FLOW CHART phase

DTC no.	Alternative text of the DTC	Time base	Conditions for fault finding	Driving/vehicle state after a fault is ascertained	Driving aid (if provided by the client)	Suspected areas Major control steps	The client office(s)/symptom(s) associated with the DTC(s)	Fault code(s) to be dealt with before working through this flow chart	Tools required
P1442	Coiled additive pump: Open circuit	MX							
P1443	Coiled additive pump: Short-circuit to ground	MX							
P1444	Coiled additive pump: Short-circuit to positive	MX							

PRE-CHECK

FLOW CHART Test procedure

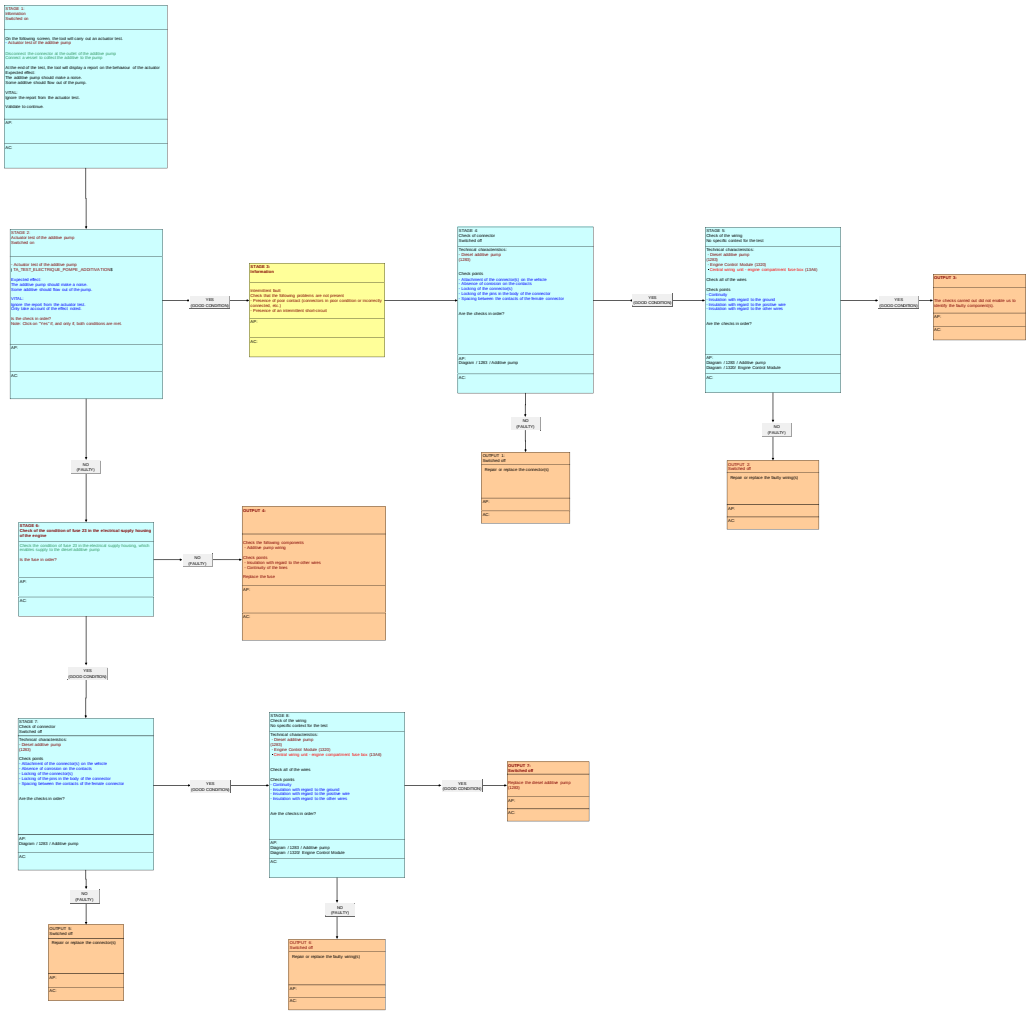

INFORMATION : FAULT CODE P1443 (ENGINE ECU)

SPECIAL FEATURE :

FOR : 1CMJ - B0FBM : DV6C TURBO DIESEL

FOR : 1PMJ - B0FBM : DV6C TURBO DIESEL

Engine ECU CONTINENTAL SID 807 branch 2	
Fault code	P1443
After sales description of the fault code	Control of the additive pump by wire : Short circuit to earth
Description of the diagnostics	Electrical fault detected for 1 s
Conditions of activation of the diagnostics	engine running
Conditions of disappearance of the fault	The following conditions have to be met - Addition of 10 litres of fuel - Driving with the engine hot for 5 minutes
Down-grade modes if fault present	Deactivation of the request for regeneration of the particle filter from the diagnostic tool
	Switching to fuel "normal reduced flow" mode
Switching on of the warning lamp and/or warning message	"SERVICE" warning lamp
Main customer complaints likely	Starting problem
	Lack of power
Suspect areas	Additive pump TI
	Additive pump MGI
	Fuse
	Electrical harnesses
	Connectors

Fault code(s): P1442 or P1443 or P1444

Reminder DTC

Do not erase the DTCs before the FLOW CHART phase

DTC no.	Alternative text of the DTC	Fuse type	Conditions for fault finding	Downgraded mode after a fault is ascertained	Driving aid (if driving aid is involved)	Suspected areas Major control steps	The client office(s)/symptom(s) associated with the DTC's	Fault code(s) to be dealt with before working through this flow chart	Tools required
P1442	Coiled additive pump: Open circuit	XX							
P1443	Coiled additive pump: Short-circuit to ground	XX							
P1444	Coiled additive pump: Short-circuit to positive	XX							

PRE-CHECK

FLOW CHART Test procedure

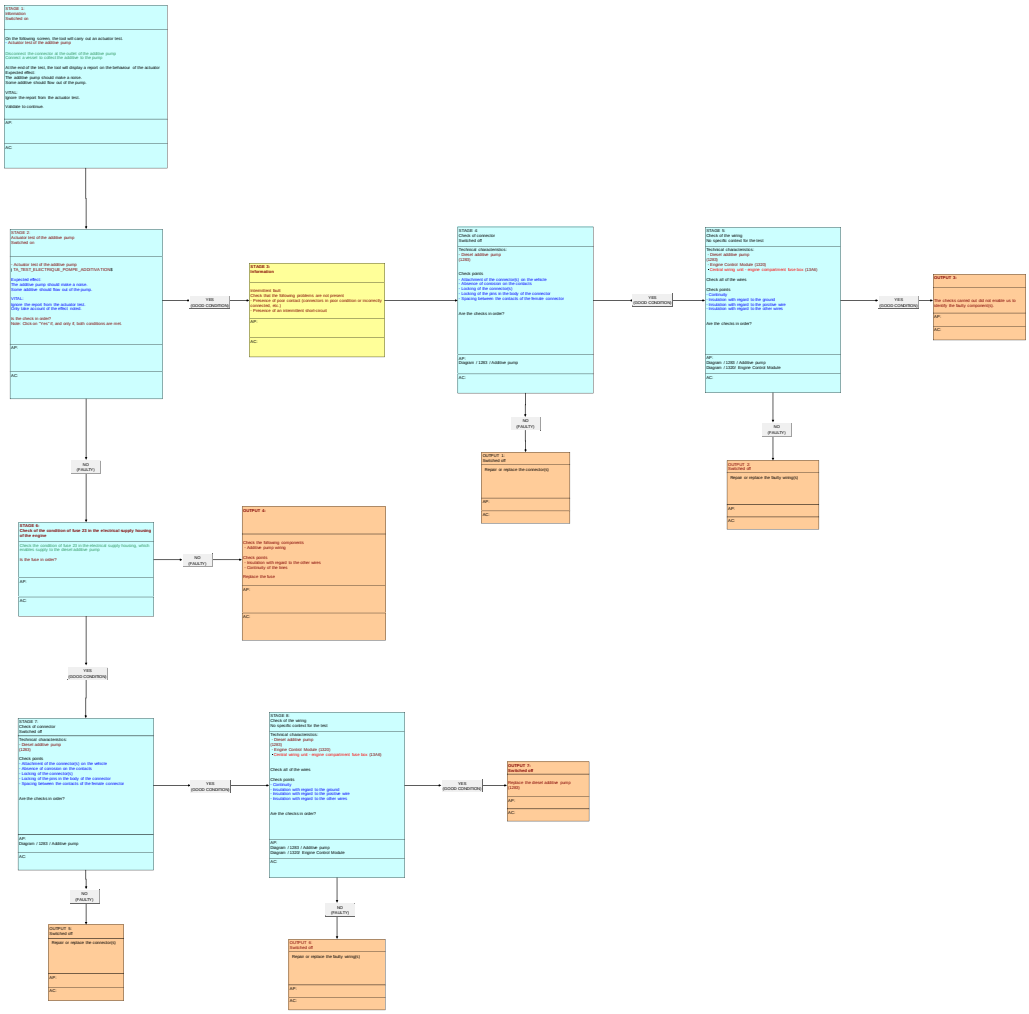

INFORMATION : FAULT CODE P1444 (ENGINE ECU)

SPECIAL FEATURE :

FOR : 1CMJ - B0FBM : DV6C TURBO DIESEL

FOR : 1PMJ - B0FBM : DV6C TURBO DIESEL

Engine ECU CONTINENTAL SID 807 branch 2	
Fault code	P1444
After sales description of the fault code	Control of the additive pump by wire : Short circuit to positive
Description of the diagnostics	Electrical fault detected for 1 s
Conditions of activation of the diagnostics	engine running
Conditions of disappearance of the fault	The following conditions have to be met - Addition of 10 litres of fuel - Driving with the engine hot for 5 minutes
Down-grade modes if fault present	Deactivation of the request for regeneration of the particle filter from the diagnostic tool
	Switching to fuel "normal reduced flow" mode
Switching on of the warning lamp and/or warning message	"SERVICE" warning lamp
Main customer complaints likely	Starting problem
	Lack of power
Suspect areas	Additive pump TI
	Additive pump MGI
	Fuse
	Electrical harnesses
	Connectors

Fault code(s): P1442 or P1443 or P1444

Reminder DTC

Do not erase the DTCs memory for the FLOW CHART phase

DTC no.	Alternative text of the DTC	Pole type	Conditions for fault finding	Downgraded mode after a fault is ascertained	Driving aid (if driving aid is activated)	Suspected areas Major control steps	The client office(s)/symptom(s) associated with the DTC's	Fault code(s) to be dealt with before working through this flow chart	Tools required
P1442	Coiled additive pump: Open circuit	NS							
P1443	Coiled additive pump: Short-circuit to ground	NS							
P1444	Coiled additive pump: Short-circuit to positive	NS							

PRE-CHECK

FLOW CHART Test procedure

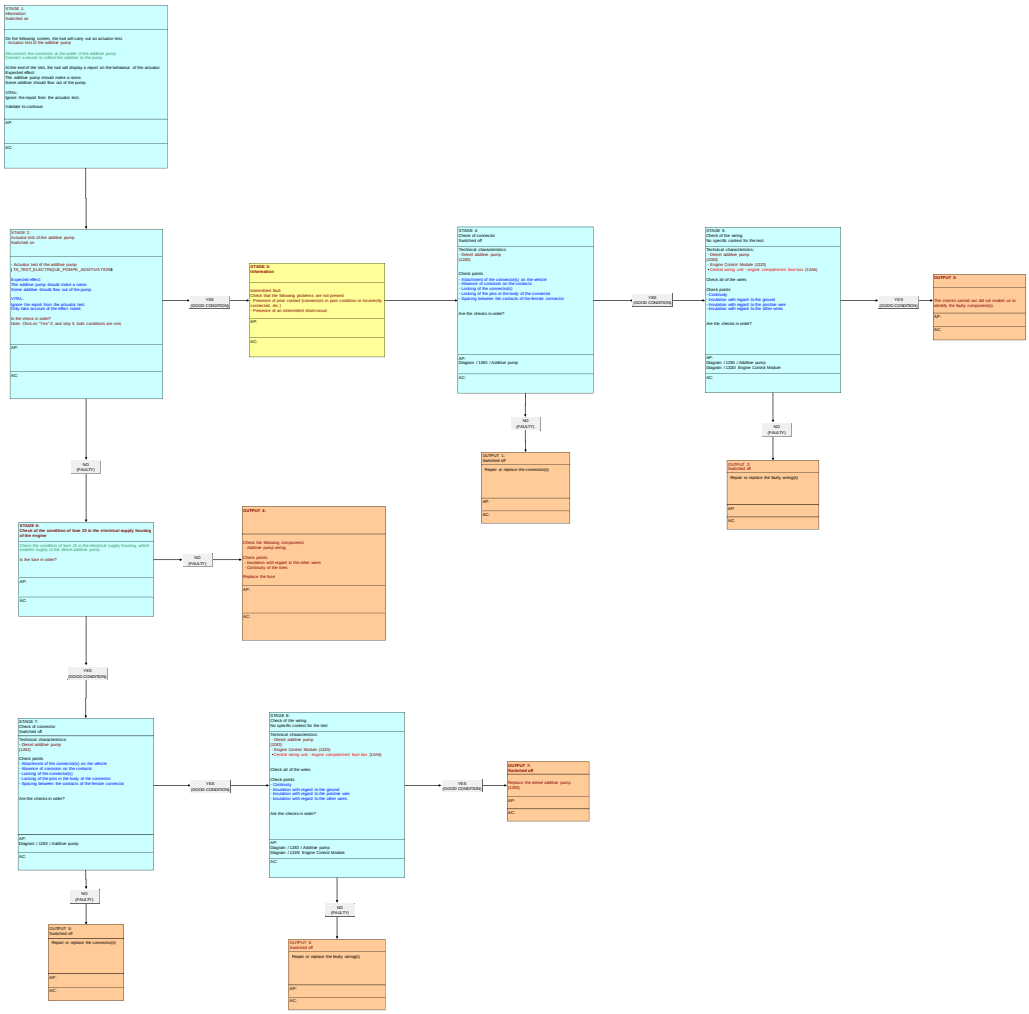

INFORMATION : FAULT CODE P1445 (ENGINE ECU)

SPECIAL FEATURE :

FOR : 1CMJ - B0FBM : DV6C TURBO DIESEL

FOR : 1PMJ - B0FBM : DV6C TURBO DIESEL

Engine ECU CONTINENTAL SID 807 branch 2	
Fault code	P1445
After sales description of the fault code	Additive adding : The quantity of additive injected into the particulate emission filter has exceeded the maximum threshold The particulate emission filter must be changed
Description of the diagnostics	The volume free in the particle filter is not sufficiently large. Necessary to replace the particle filter at the next service interval
Conditions of activation of the diagnostics	Engine running
Conditions of disappearance of the fault	-
Down-grade modes if fault present	-
Switching on of the warning lamp and/or warning message	-
Main customer complaints likely	Smoke from the exhaust
Suspect areas	Particle emission filter at the end of its service life

Fault code(s): P1445

Reminder DTC

Do not fill in this section for the FLOW CHART phase

DTC no.	Aftersales text of the DTC	Fault type	Conditions for fault finding	Downgraded mode after a fault is ascertained	Illumination of warning light	Suspected areas Major control steps	The client effect(s)/symptom(s) associated with the DTCs	Fault code(s) to be dealt with before working through this flow chart	Tools required
P1445	Addition of additive: The quantity of additive injected into the particle filter has exceeded the maximum threshold The particle filter must be changed	B							
									

PRE-CHECK

FLOW CHART Test procedure

STAGE 1:
Information
Switched off

The particle filter has reached the end of its life
Replace the particle filter

Attention:
Follow the procedure detailed in the diagnostic tool

AP:

AC:

INFORMATION : FAULT CODE P1446 (ENGINE ECU)

SPECIAL FEATURE :

FOR : 1CMJ - B0FBM : DV6C TURBO DIESEL

FOR : 1PMJ - B0FBM : DV6C TURBO DIESEL

Engine ECU CONTINENTAL SID 807 branch 2	
Fault code	P1446
After sales description of the fault code	Additive adding : Calculated additive level below the critical threshold
Description of the diagnostics	The engine ECU indicates that the critical additive level has been reached
Conditions of activation of the diagnostics	Engine running
Conditions of disappearance of the fault	-
Down-grade modes if fault present	Deactivation of the request for regeneration of the particle filter from the diagnostic tool
Switching on of the warning lamp and/or warning message	-
Main customer complaints likely	Starting problem
	Lack of power
Suspect areas	Particle filter additive reservoir
	Particle filter additive

Fault code(s): P1446 or P15B3

Reminder DTC

Do not fill in this section for the FLOW CHART phase

DTC no.	Aftersales text of the DTC	Fault type	Conditions for fault finding	Downgraded mode after a fault is ascertained	Illumination of Engine Control Unit light	Suspected areas Major control steps	The client effect(s)/symptom(s) associated with the DTCs	Fault code(s) to be dealt with before working through this flow chart	Tools required
P1446	Addition of additive: Additive level calculated lower than the critical threshold	B							
P15B3	Addition of additive: Additive level calculated lower than the minimum threshold	B							

PRE-CHECK

FLOW CHART Test procedure

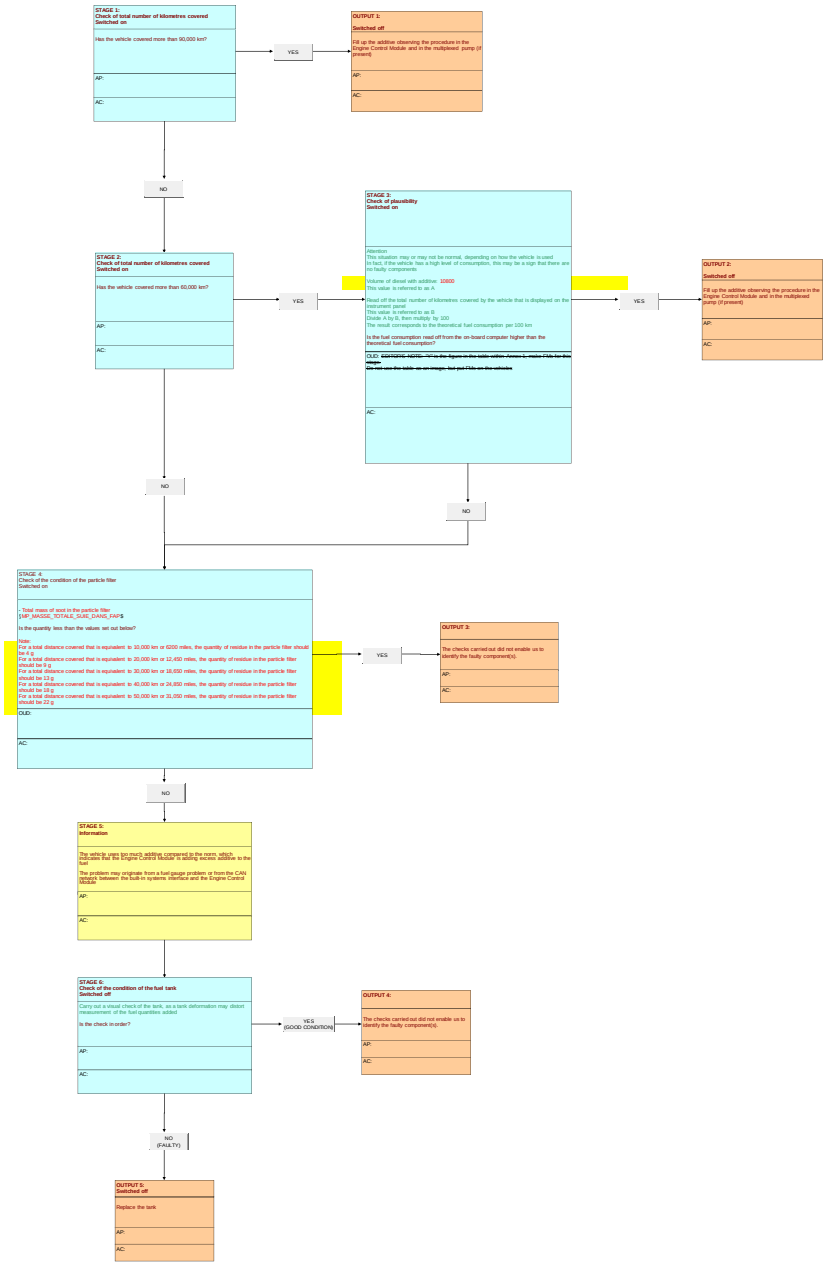

INFORMATION : FAULT CODE P1457 (ENGINE ECU)

SPECIAL FEATURE :

FOR : 1CMJ - B0FBM : DV6C TURBO DIESEL

FOR : 1PMJ - B0FBM : DV6C TURBO DIESEL

Engine ECU CONTINENTAL SID 807 branch 2	
Fault code	P1457
After sales description of the fault code	Particle filter : Detected absent
Description of the diagnostics	Possibility 1 For a flow volume of 250000 l/h passing through the particle emission filter, the differential pressure is lower than 7 mbar for 5 seconds
	Possibility 2 For a flow volume of 350000 l/h passing through the particle emission filter, the differential pressure is lower than 17 mbar for 5 seconds
	Possibility 3 For a flow volume of 450000 l/h passing through the particle emission filter, the differential pressure is lower than 30 mbar for 5 seconds
Conditions of activation of the diagnostics	The following conditions have to be met - Flow volume traversing the particle filter greater than 160000 l/h - Engine speed above 1850 rpm - Do not be in particle filter regeneration - Engine running without regeneration of the particle emission filter for 5 minutes
Conditions of disappearance of the fault	Driving for 5 minutes with several full load accelerations for 10 seconds
Down-grade modes if fault present	-
Switching on of the warning lamp and/or warning message	Warning lamp MIL
Main customer complaints likely	Smoke from the exhaust
	Absence of automatic stopping of the internal combustion engine (Vehicle equipped with "stop and

	start")
Suspect areas	Particle filter
	Particle filter differential pressure sensor
	Exhaust gas pressure take-off pipes
	Particle filter upstream temperature sensor
	Air temperature sensor at the air flowmeter
	Electrical harnesses
	Connectors

Fault code(s): P1457

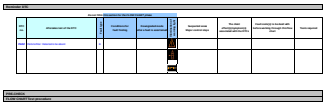

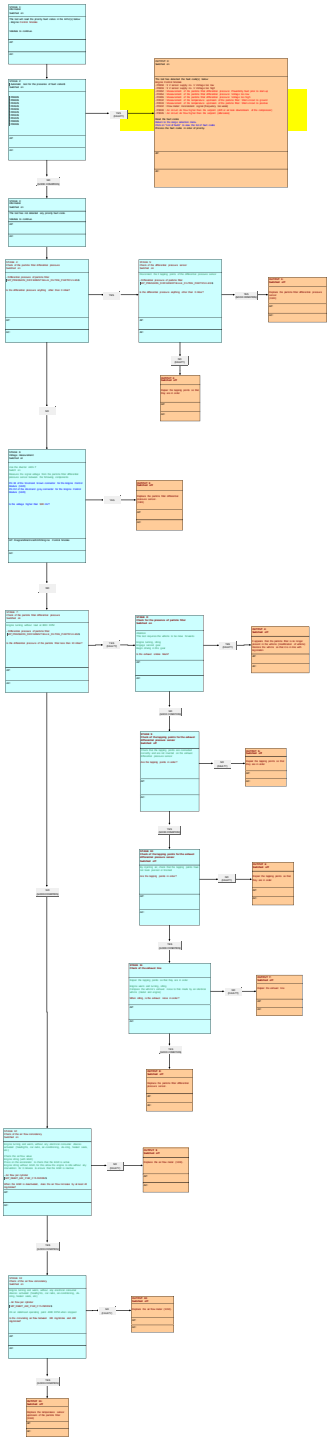

INFORMATION : FAULT CODE P1490 (ENGINE ECU)

SPECIAL FEATURE :

FOR : 1CMJ - B0FBM : DV6C TURBO DIESEL

FOR : 1PMJ - B0FBM : DV6C TURBO DIESEL

Engine ECU CONTINENTAL SID 807 branch 2	
Fault code	P1490
After sales description of the fault code	Particle filter : Detected overloaded
Description of the diagnostics	Possibility 1 For a volume flow passing through the particle filter of 300000 l/h, the differential pressure is greater than 100 mbar for 3 s
	Possibility 2 For a volume flow passing through the particle filter of 800000 l/h, the differential pressure is greater than 460 mbar for 3 s
	Possibility 3 For a volume flow passing through the particle filter of 1200000 l/h, the differential pressure is greater than 510 mbar for 3 s
Conditions of activation of the diagnostics	The following conditions have to be met - Flow volume traversing the particle filter greater than 180000 l/h - Do not be in particle filter regeneration - Engine running without regeneration of the particle emission filter for 5 minutes
Conditions of disappearance of the fault	Driving for 5 minutes
Down-grade modes if fault present	Transmission to the multifunction screen of "risk of clogging of the particle filter"
Switching on of the warning lamp and/or warning message	-
Main customer	Starting problem
	Lack of power
	Jerking/stalling

complaints likely	Fluid leak/smells (diesel fuel, oil, etc.)
	Absence of automatic stopping of the internal combustion engine (Vehicle equipped with "stop and start")
Suspect areas	Catalytic converter ageing
	Particle emission filter clogged or over-loaded
	Particle filter differential pressure sensor
	Exhaust gas pressure take-off pipes
	Particle filter upstream temperature sensor
	Particle filter additive
	Vehicle used too much for city driving
	Additive pump TI
	Additive pump MGI
	Leak on the additive circuit
	Additive circuit non-return valve jammed closed
	Electrical harnesses

Fault code(s): P242F or P1490

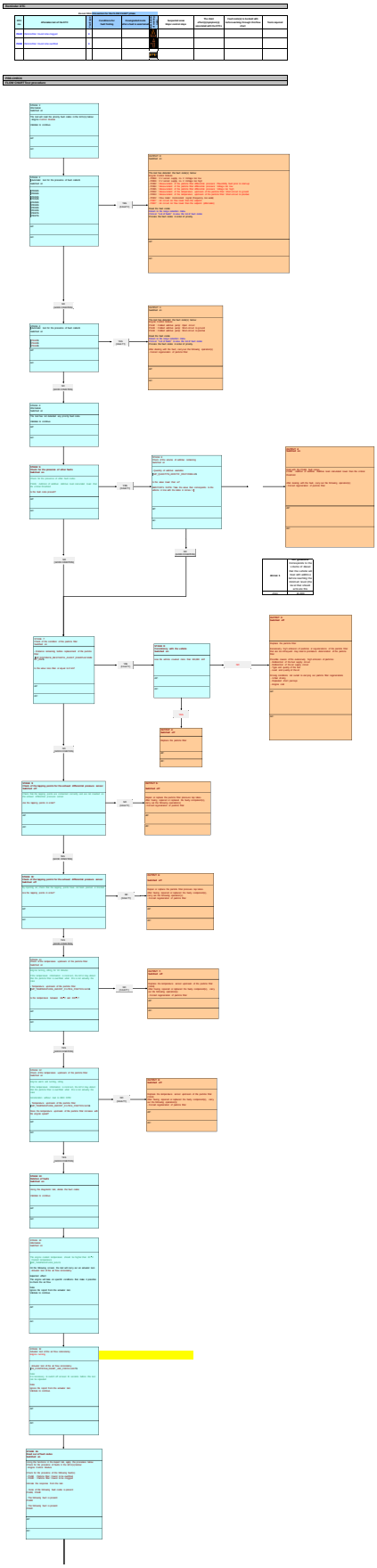

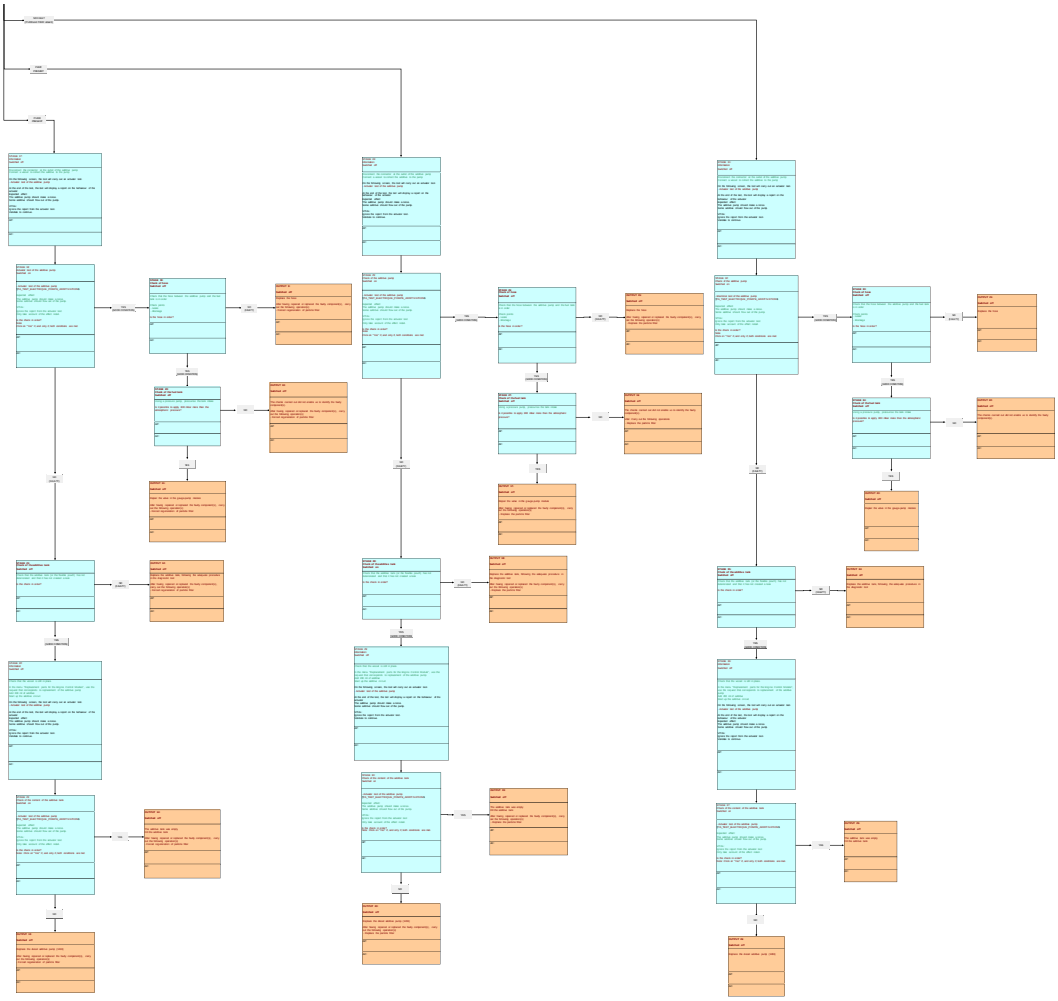

INFORMATION : FAULT CODE P1496 (ENGINE ECU)

SPECIAL FEATURE :

FOR : 1CB7 - B0FBM : DV6C TURBO DIESEL

FOR : 1CX7 - B0FBM : DV6C TURBO DIESEL

FOR : 1C58 - B0FBM : DV6C TURBO DIESEL

FOR : 1PT7 - B0FBM : DV6C TURBO DIESEL

FOR : 1PW2 - B0FBM : DV6C TURBO DIESEL

FOR : 1CB8 - B0FBM : DV6C TURBO DIESEL

FOR : 1CXA - B0FBM : DV6C TURBO DIESEL

FOR : 1CYA - B0FBM : DV6C TURBO DIESEL

FOR : 1PTB - B0FBM : DV6C TURBO DIESEL

FOR : 1PTC - B0FBM : DV6C TURBO DIESEL

FOR : 1PIA - B0FBM : DV6C TURBO DIESEL

FOR : 1CMJ - B0FBM : DV6C TURBO DIESEL

FOR : 1PMJ - B0FBM : DV6C TURBO DIESEL

Engine ECU CONTINENTAL SID 807 branch 2	
Fault code	P1496
After sales description of the fault code	turbocharger : Position incorrect in relation to the setting, too much turbo (Service)
Description of the diagnostics	The position measured is less than the reference by more than 20 % for 4 seconds
Conditions of activation of the diagnostics	Engine running for more than 30 seconds and engine speed higher than 1500 rpm
Conditions of disappearance of the fault	Driving for 5 minutes
Down-grade modes if fault present	-
Switching on of the warning lamp and/or warning message	-

Main customer complaints likely	Noise
	Slightly higher fuel consumption
Suspect areas	turbocharger
	Turbocharger variable geometry control solenoid valve
	Turbocharger variable geometry position repeat sensor
	Electrical harnesses
	Connectors
	Clogging of the vacuum circuit

Fault code(s): P2563 or P1496

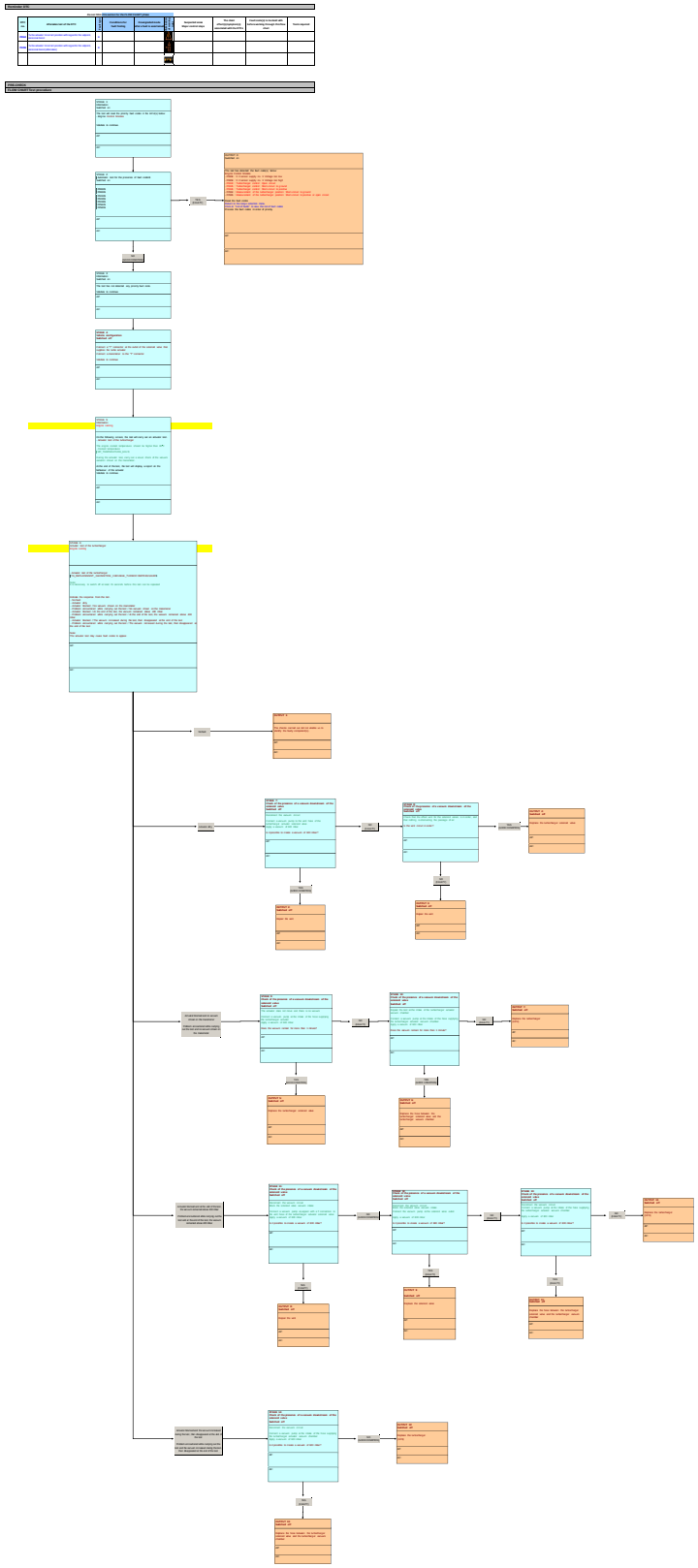

INFORMATION : FAULT CODE P1497 (ENGINE ECU)

SPECIAL FEATURE :

FOR : 1CB7 - B0FBM : DV6C TURBO DIESEL

FOR : 1CX7 - B0FBM : DV6C TURBO DIESEL

FOR : 1C58 - B0FBM : DV6C TURBO DIESEL

FOR : 1PT7 - B0FBM : DV6C TURBO DIESEL

FOR : 1PW2 - B0FBM : DV6C TURBO DIESEL

FOR : 1CB8 - B0FBM : DV6C TURBO DIESEL

FOR : 1CXA - B0FBM : DV6C TURBO DIESEL

FOR : 1CYA - B0FBM : DV6C TURBO DIESEL

FOR : 1PTB - B0FBM : DV6C TURBO DIESEL

FOR : 1PTC - B0FBM : DV6C TURBO DIESEL

FOR : 1PIA - B0FBM : DV6C TURBO DIESEL

FOR : 1CMJ - B0FBM : DV6C TURBO DIESEL

FOR : 1PMJ - B0FBM : DV6C TURBO DIESEL

Engine ECU CONTINENTAL SID 807 branch 2	
Fault code	P1497
After sales description of the fault code	turbocharger : Position incorrect relative to requirement, not enough turbo (Service)
Description of the diagnostics	The position measured is greater than the reference by more than 30 % for 4 seconds
Conditions of activation of the diagnostics	Engine running for more than 30 seconds and engine speed higher than 1500 rpm
Conditions of disappearance of the fault	Driving for 5 minutes
Down-grade modes if fault present	-
Switching on of the warning lamp and/or warning message	-
Main customer	Noise
	Smoke from the exhaust

complaints likely	Lack of power
	Loss of braking
Suspect areas	turbocharger
	Turbocharger variable geometry control solenoid valve
	Turbocharger variable geometry position repeat sensor
	Electrical harnesses
	EGR exchanger with bypass
	EGR exchanger bypass control solenoid valve
	Connectors
	Air leak on vacuum circuit
	Vacuum pump

Fault code(s): P2562 or P1497



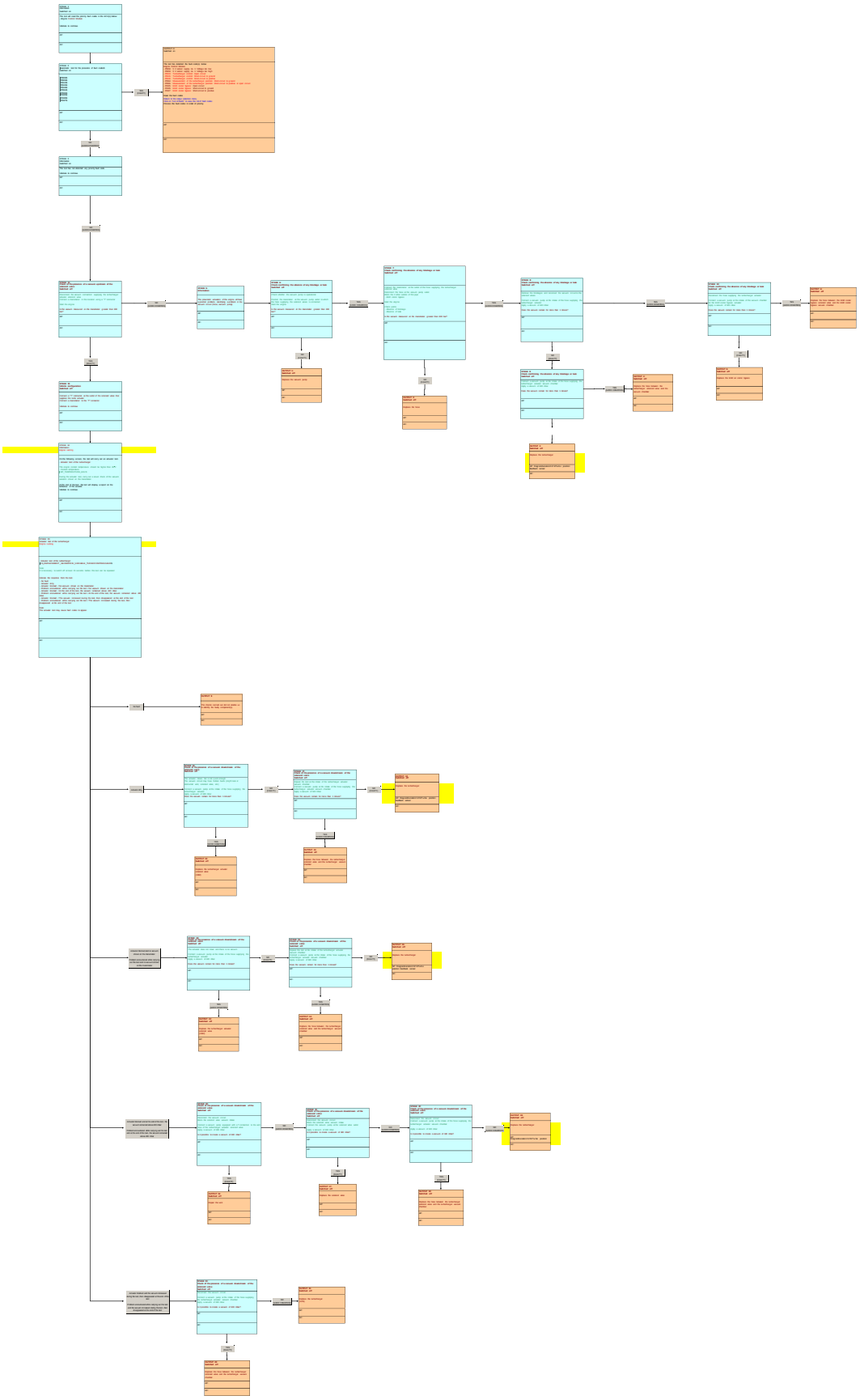

INFORMATION : FAULT CODE P1498 (ENGINE ECU)

SPECIAL FEATURE :

FOR : 1CB7 - B0FBM : DV6C TURBO DIESEL

FOR : 1CB8 - B0FBM : DV6C TURBO DIESEL

FOR : 1CXA - B0FBM : DV6C TURBO DIESEL

FOR : 1CX7 - B0FBM : DV6C TURBO DIESEL

FOR : 1CYA - B0FBM : DV6C TURBO DIESEL

FOR : 1C58 - B0FBM : DV6C TURBO DIESEL

FOR : 1PIA - B0FBM : DV6C TURBO DIESEL

FOR : 1PTB - B0FBM : DV6C TURBO DIESEL

FOR : 1PTC - B0FBM : DV6C TURBO DIESEL

FOR : 1PT7 - B0FBM : DV6C TURBO DIESEL

FOR : 1PW2 - B0FBM : DV6C TURBO DIESEL

FOR : 1CMJ - B0FBM : DV6C TURBO DIESEL

FOR : 1PMJ - B0FBM : DV6C TURBO DIESEL

Engine ECU CONTINENTAL SID 807 branch 2	
Fault code	P1498
After sales description of the fault code	Air metering valve : Position incorrect (too closed) (Service)
Description of the diagnostics	The position measured is less than the reference by more than 50 % for 5 seconds
Conditions of activation of the diagnostics	Engine running
Conditions of disappearance of the fault	Driving for 5 minutes
Down-grade modes if fault present	-
Switching on of the warning lamp and/or warning message	-

Main customer complaints likely	Noise
	Smoke from the exhaust
	Lack of power
	Slightly higher fuel consumption
	Jerking/stalling
	Absence of automatic stopping of the internal combustion engine (Vehicle equipped with "stop and start")
Suspect areas	Air metering valve
	Electrical harness
	Connectors

Fault code(s): P2173 or P2175 or P1498 or P1499

Reminder DTC

Do not fill in this section for the FLOW CHART phase

DTC no.	Aftersales text of the DTC	Fault type	Conditions for fault finding	Downgraded mode after a fault is memorised	Driver warning lamp	Suspected areas Major control loops	The client «The(s) symptom(s) associated with the DTC»	Fault code(s) to be dealt with before working through this flow chart	Tools required
P2173	Choke/butterfly valve incorrect position with regard to the setpoint (too open)	B							
P2175	Choke/butterfly valve incorrect position with regard to the setpoint (too closed)	B							
P1498	Choke/butterfly valve incorrect position with regard to the setpoint (too open) (alternate)	B							
P1499	Choke/butterfly valve incorrect position with regard to the setpoint (too closed) (alternate)	B							

PRE-CHECK
FLOW CHART Test procedure

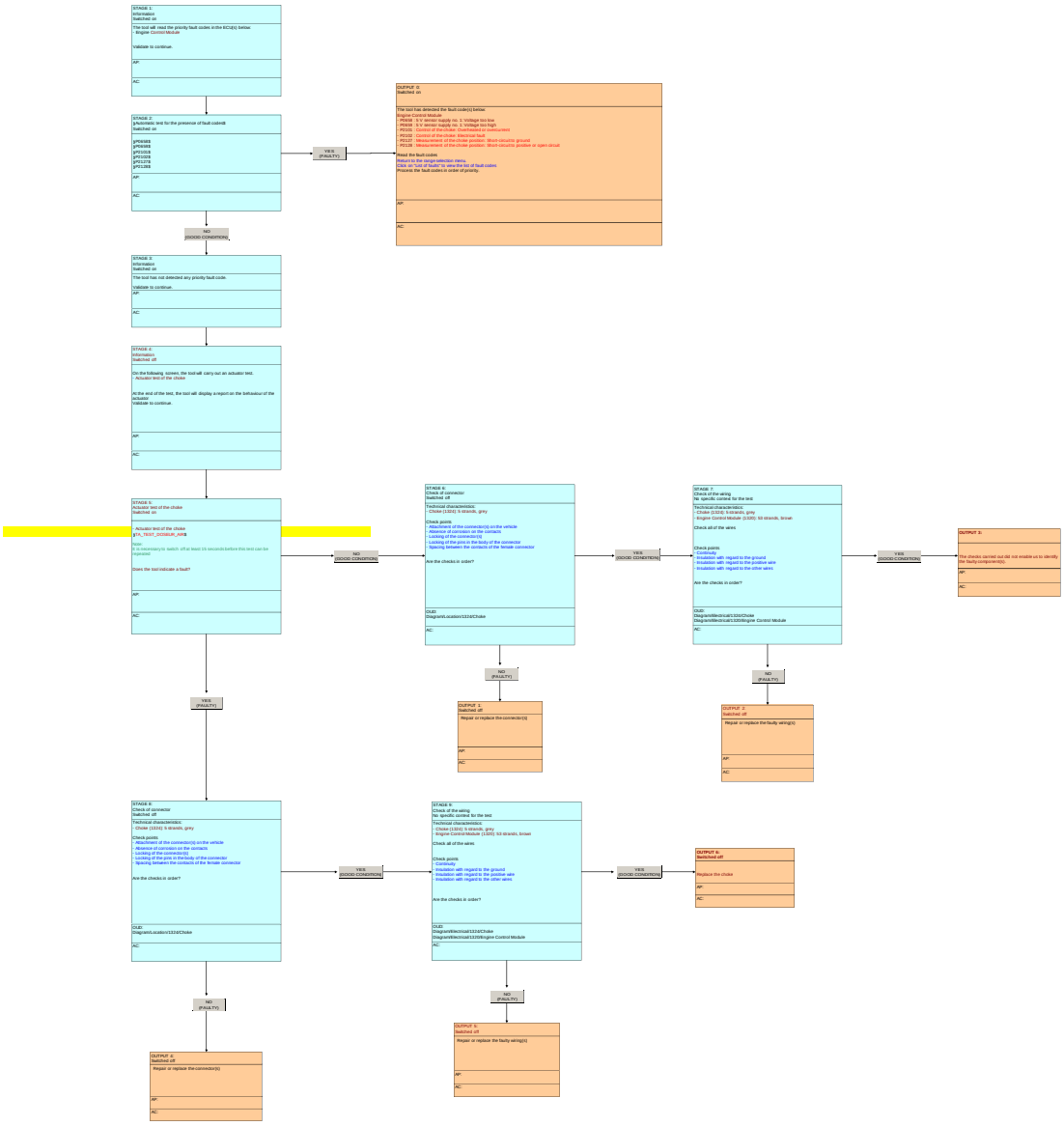

INFORMATION : FAULT CODE P1499 (ENGINE ECU)

SPECIAL FEATURE :

FOR : 1CB7 - B0FBM : DV6C TURBO DIESEL

FOR : 1CB8 - B0FBM : DV6C TURBO DIESEL

FOR : 1CXA - B0FBM : DV6C TURBO DIESEL

FOR : 1CX7 - B0FBM : DV6C TURBO DIESEL

FOR : 1CYA - B0FBM : DV6C TURBO DIESEL

FOR : 1C58 - B0FBM : DV6C TURBO DIESEL

FOR : 1PIA - B0FBM : DV6C TURBO DIESEL

FOR : 1PTB - B0FBM : DV6C TURBO DIESEL

FOR : 1PTC - B0FBM : DV6C TURBO DIESEL

FOR : 1PT7 - B0FBM : DV6C TURBO DIESEL

FOR : 1PW2 - B0FBM : DV6C TURBO DIESEL

FOR : 1CMJ - B0FBM : DV6C TURBO DIESEL

FOR : 1PMJ - B0FBM : DV6C TURBO DIESEL

Engine ECU CONTINENTAL SID 807 branch 2	
Fault code	P1499
After sales description of the fault code	Air metering valve : Position incorrect (too open) (Service)
Description of the diagnostics	The position measured is greater than the reference by more than 50 % for 5 seconds
Conditions of activation of the diagnostics	Engine running
Conditions of disappearance of the fault	Driving for 5 minutes
Down-grade modes if fault present	-
Switching on of the warning lamp and/or warning message	-

Main customer complaints likely	Noise
	Smoke from the exhaust
	Slightly higher fuel consumption
	Jerking/stalling
	Lack of power
	Absence of automatic stopping of the internal combustion engine (Vehicle equipped with "stop and start")
Suspect areas	Air metering valve
	Electrical harness
	Connectors

Fault code(s): P2173 or P2175 or P1498 or P1499

Reminder DTC

Do not fill in this section for the FLOW CHART phase

DTC no.	Aftersales text of the DTC	Fault type	Conditions for fault finding	Downgraded mode after a fault is memorised	Driver warning light	Suspected areas Major control loops	The client «Th<CE(Symptom(s) associated with the DTCs	Fault code(s) to be dealt with before working through this flow chart	Tools required
P2173	Choke/butterfly valve incorrect position with regard to the setpoint (too open)	A							
P2175	Choke/butterfly valve incorrect position with regard to the setpoint (too closed)	A							
P1498	Choke/butterfly valve incorrect position with regard to the setpoint (too open) (alternate)	A							
P1499	Choke/butterfly valve incorrect position with regard to the setpoint (too closed) (alternate)	A							

PRE-CHECK
FLOW CHART Test procedure

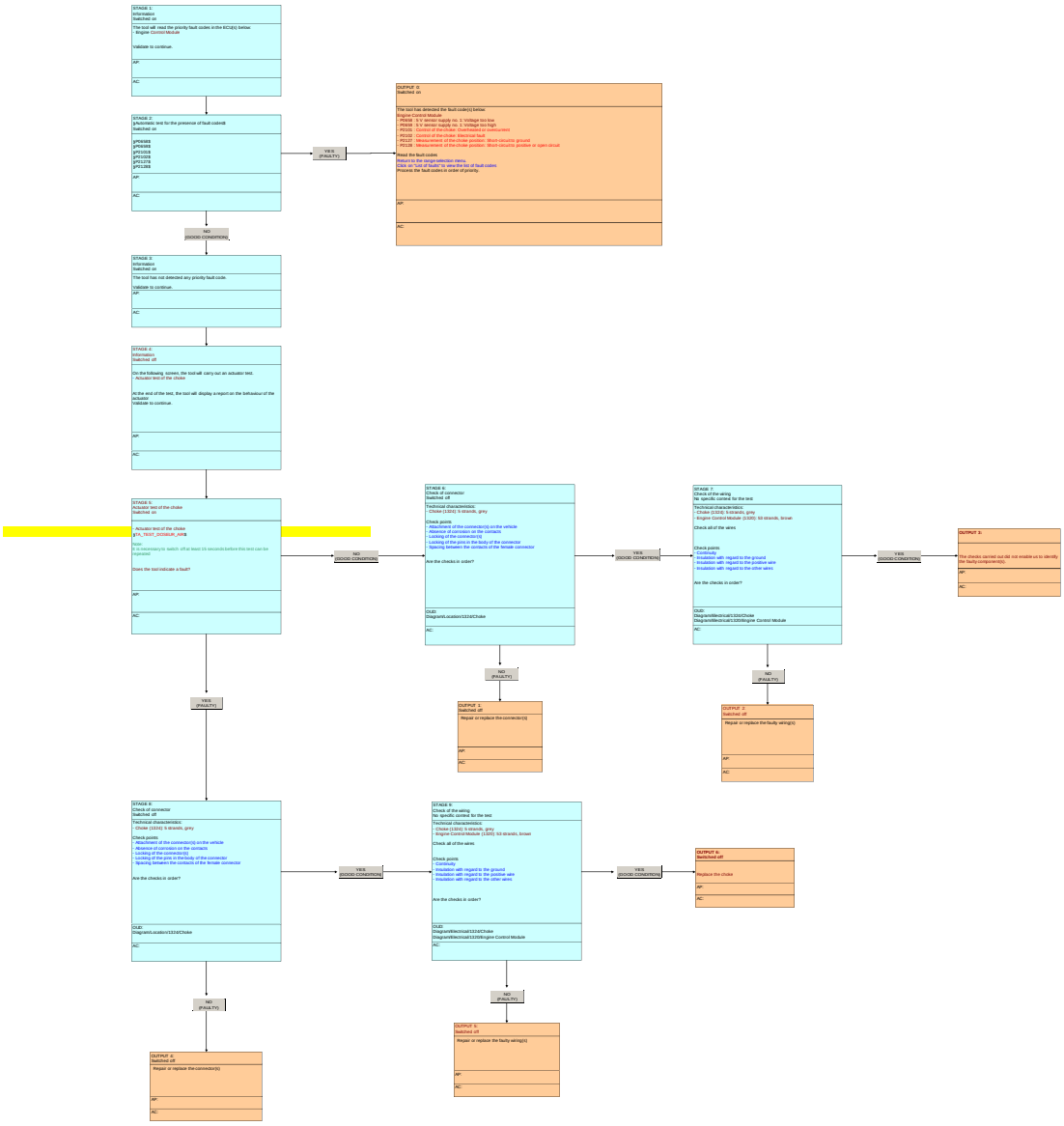

INFORMATION : FAULT CODE P14A7 (ENGINE ECU)

SPECIAL FEATURE :

FOR : 1CB7 - B0FBM : DV6C TURBO DIESEL

FOR : 1CX7 - B0FBM : DV6C TURBO DIESEL

FOR : 1C58 - B0FBM : DV6C TURBO DIESEL

FOR : 1PT7 - B0FBM : DV6C TURBO DIESEL

FOR : 1PW2 - B0FBM : DV6C TURBO DIESEL

FOR : 1CB8 - B0FBM : DV6C TURBO DIESEL

FOR : 1CXA - B0FBM : DV6C TURBO DIESEL

FOR : 1CYA - B0FBM : DV6C TURBO DIESEL

FOR : 1PTB - B0FBM : DV6C TURBO DIESEL

FOR : 1PTC - B0FBM : DV6C TURBO DIESEL

FOR : 1PIA - B0FBM : DV6C TURBO DIESEL

FOR : 1CMJ - B0FBM : DV6C TURBO DIESEL

FOR : 1PMJ - B0FBM : DV6C TURBO DIESEL

Engine ECU CONTINENTAL SID 807 branch 2	
Fault code	P14A7
After sales description of the fault code	EGR valve : Failure of the first programming operations
Description of the diagnostics	Fault detected on the initial programming of the EGR valve
Conditions of activation of the diagnostics	Engine ECU in becoming dormant phase
Conditions of disappearance of the fault	Engine started then stopped 3 times with waiting for the engine management ECU switching to dormant mode phase for 1 minute before each start-up
Down-grade modes if fault present	-
Switching on of the warning lamp and/or warning message	-
	Noise
	Smoke from the exhaust

Main customer complaints likely	Absence of automatic stopping of the internal combustion engine (Vehicle equipped with "stop and start")
Suspect areas	Exhaust gas recycling valve
	Electrical harness
	Connectors

Fault code(s): P14A7

Reminder DTC

Do not fill in this section for the FLOW CHART phase

DTC no.	Aftersales text of the DTC	Fault type	Conditions for fault finding	Downgraded mode after a fault is ascertained	Consequence of the fault on driving	Suspected areas Major control steps	The client effect(s)/symptom(s) associated with the DTCs	Fault code(s) to be dealt with before working through this flow chart	Tools required
P14A7	EGR valve: Failure of initial configuration	B							

PRE-CHECK

FLOW CHART Test procedure

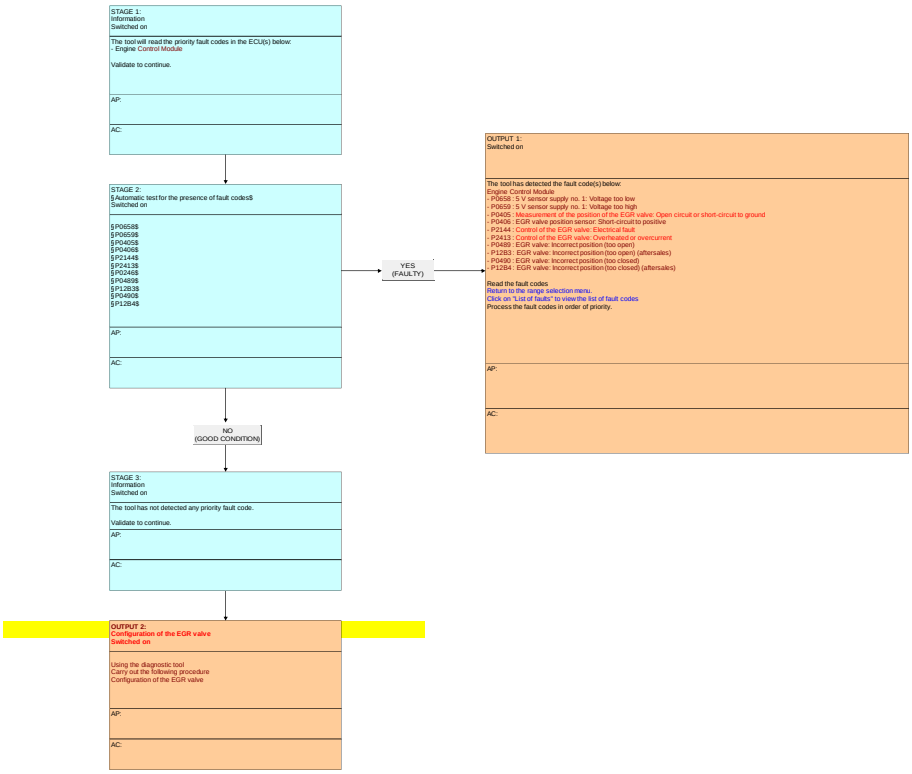

INFORMATION : FAULT CODE P14AA (ENGINE ECU)

SPECIAL FEATURE :

FOR : 1CB7 - B0FBM : DV6C TURBO DIESEL

FOR : 1CB8 - B0FBM : DV6C TURBO DIESEL

FOR : 1CXA - B0FBM : DV6C TURBO DIESEL

FOR : 1CX7 - B0FBM : DV6C TURBO DIESEL

FOR : 1CYA - B0FBM : DV6C TURBO DIESEL

FOR : 1C58 - B0FBM : DV6C TURBO DIESEL

FOR : 1PIA - B0FBM : DV6C TURBO DIESEL

FOR : 1PTB - B0FBM : DV6C TURBO DIESEL

FOR : 1PTC - B0FBM : DV6C TURBO DIESEL

FOR : 1PT7 - B0FBM : DV6C TURBO DIESEL

FOR : 1PW2 - B0FBM : DV6C TURBO DIESEL

FOR : 1CMJ - B0FBM : DV6C TURBO DIESEL

FOR : 1PMJ - B0FBM : DV6C TURBO DIESEL

Engine ECU CONTINENTAL SID 807 branch 2	
Fault code	P14AA
After sales description of the fault code	Air metering valve : Failure of the first programming operations
Description of the diagnostics	Fault detected on the initial programming of the air metering valve
Conditions of activation of the diagnostics	-
Conditions of disappearance of the fault	Start the engine and let it run for 4 min, then stop the engine and wait for the engine ECU to go into sleep phase for 1 min
Down-grade modes if fault present	-
Switching on of the warning lamp and/or warning message	-

Main customer complaints likely	Engine stop downgraded
	Noise
	Jerking/stalling
	Lack of power
	Absence of automatic stopping of the internal combustion engine (Vehicle equipped with "stop and start")
	Problem with automatic restarting of the internal combustion engine (Vehicle equipped with "stop and start")
Suspect areas	Air metering valve
	Electrical harness
	Connectors

Fault code(s): P14AA

Reminder DTC

Do not fill in this section for the FLOW CHART phase

DTC no.	Aftersales text of the DTC	Fault type	Conditions for fault finding	Downgraded mode after a fault is ascertained	Immediate stop of vehicle necessary	Suspected areas Major control steps	The client effect(s)/symptom(s) associated with the DTCs	Fault code(s) to be dealt with before working through this flow chart	Tools required
P14AA	Choke/butterfly valve Failure of initial configuration	B							

PRE-CHECK

FLOW CHART Test procedure

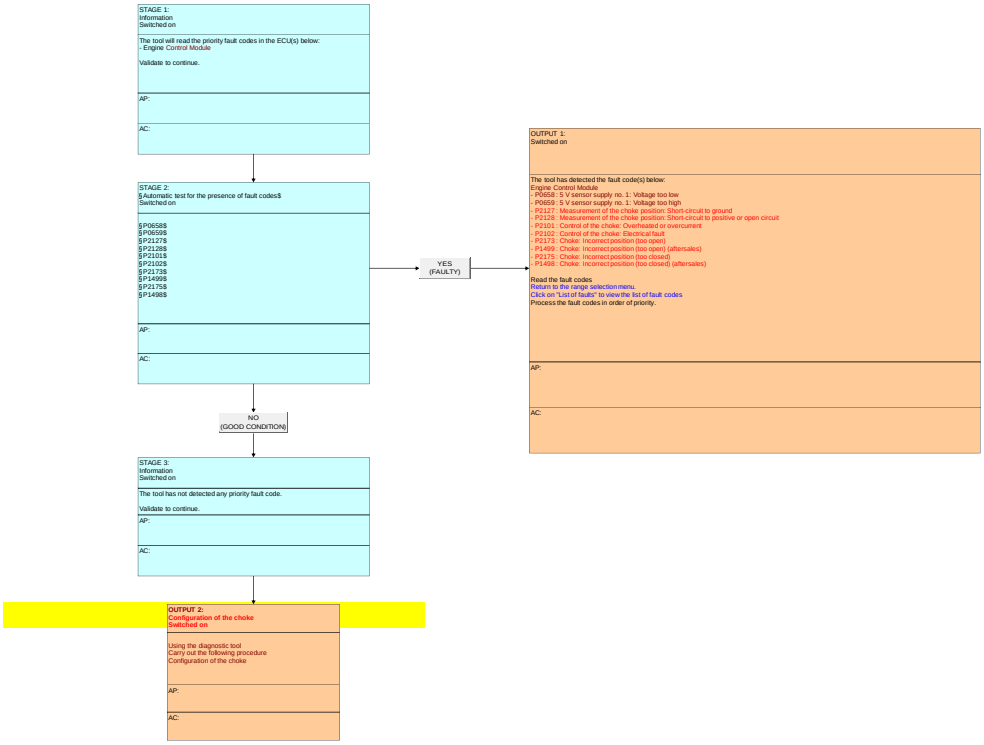

INFORMATION : FAULT CODE P150A (ENGINE ECU)

Engine ECU CONTINENTAL SID 807 branch 2	
Fault code	P150A
After sales description of the fault code	Starting monitoring : Key info plausibility fault
Description of the diagnostics	Key information incorrect
Conditions of activation of the diagnostics	Ignition on
Conditions of disappearance of the fault	Starting 1
Down-grade modes if fault present	Request to stop the starter
Switching on of the warning lamp and/or warning message	"SERVICE" warning lamp
Main customer complaints likely	Starting problem
Suspect areas	Intersystem CAN network
	Built-in systems interface

Fault code(s): P151A or P150A

Reminder DTC

Do not fill in this section for the FLOW CHART phase

DTC no.	Aftersales text of the DTC	Fault type	Conditions for fault finding	Downgraded mode after a fault is ascertained	Consequence on driving cycle	Suspected areas Major control steps	The client effect(s)/symptom(s) associated with the DTCs	Fault code(s) to be dealt with before working through this flow chart	Tools required
P151A	Monitoring of start-up: ADC unlocking time too long								
P150A	Monitoring of start-up: Plausibility fault in the key information								
					STRICT				

PRE-CHECK

FLOW CHART Test procedure

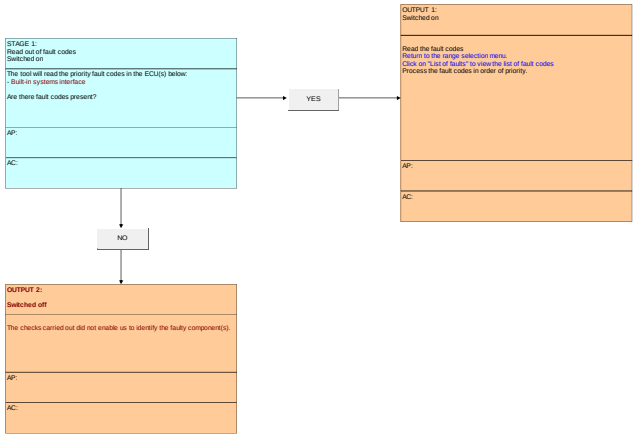

INFORMATION : FAULT CODE P151A (ENGINE ECU)

SPECIAL FEATURE :

FOR : 1CB7 - B0FBM : DV6C TURBO DIESEL

FOR : 1CX7 - B0FBM : DV6C TURBO DIESEL

FOR : 1C58 - B0FBM : DV6C TURBO DIESEL

FOR : 1PT7 - B0FBM : DV6C TURBO DIESEL

FOR : 1PW2 - B0FBM : DV6C TURBO DIESEL

FOR : 1CB8 - B0FBM : DV6C TURBO DIESEL

FOR : 1CXA - B0FBM : DV6C TURBO DIESEL

FOR : 1CYA - B0FBM : DV6C TURBO DIESEL

FOR : 1PTB - B0FBM : DV6C TURBO DIESEL

FOR : 1PTC - B0FBM : DV6C TURBO DIESEL

FOR : 1PIA - B0FBM : DV6C TURBO DIESEL

FOR : 1CMJ - B0FBM : DV6C TURBO DIESEL

FOR : 1PMJ - B0FBM : DV6C TURBO DIESEL

Engine ECU CONTINENTAL SID 807 branch 2	
Fault code	P151A
After sales description of the fault code	Starting monitoring : The time for unlocking the immobiliser is too long
Description of the diagnostics	Coded engine immobiliser system unlocking time more than 500 ms
Conditions of activation of the diagnostics	Ignition on
Conditions of disappearance of the fault	10 successive starts
Down-grade modes if fault present	-
Switching on of the warning lamp and/or warning message	-

Main customer complaints likely	Starting problem
Suspect areas	Coded anti-start

Fault code(s): P151A or P150A

Reminder DTC

Do not fill in this section for the FLOW CHART phase

DTC no.	Aftersales text of the DTC	Fault type	Conditions for fault finding	Downgraded mode after a fault is ascertained	Consequence of DTC on vehicle driving	Suspected areas Major control steps	The client effect(s)/symptom(s) associated with the DTCs	Fault code(s) to be dealt with before working through this flow chart	Tools required
P151A	Monitoring of start-up: ADC unlocking time too long								
P150A	Monitoring of start-up: Plausibility fault in the key information								

PRE-CHECK

FLOW CHART Test procedure

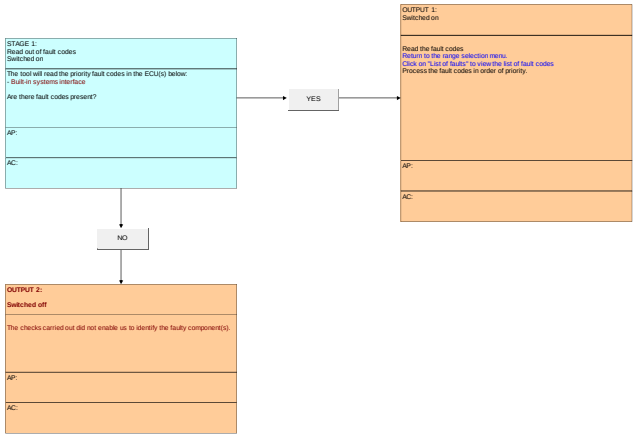

INFORMATION : FAULT CODE P1536 (ENGINE ECU)

SPECIAL FEATURE :

FOR : 1CB7 - B0FBM : DV6C TURBO DIESEL

FOR : 1CX7 - B0FBM : DV6C TURBO DIESEL

FOR : 1C58 - B0FBM : DV6C TURBO DIESEL

FOR : 1PT7 - B0FBM : DV6C TURBO DIESEL

FOR : 1PW2 - B0FBM : DV6C TURBO DIESEL

FOR : 1CB8 - B0FBM : DV6C TURBO DIESEL

FOR : 1CXA - B0FBM : DV6C TURBO DIESEL

FOR : 1CYA - B0FBM : DV6C TURBO DIESEL

FOR : 1PTB - B0FBM : DV6C TURBO DIESEL

FOR : 1PTC - B0FBM : DV6C TURBO DIESEL

FOR : 1PIA - B0FBM : DV6C TURBO DIESEL

FOR : 1CMJ - B0FBM : DV6C TURBO DIESEL

FOR : 1PMJ - B0FBM : DV6C TURBO DIESEL

Engine ECU CONTINENTAL SID 807 branch 2	
Fault code	P1536
After sales description of the fault code	Measurement of the brake pedal position : Lack of coherence between the two brake sensors detected on deceleration
Description of the diagnostics	Lack of coherence between the main brake and the secondary brake during sharp deceleration for 500 ms
Conditions of activation of the diagnostics	Engine running
Conditions of disappearance of the fault	Driving for 5 minutes with numerous braking actions
Down-grade modes if fault present	Irreversible deactivation of the vehicle cruise control
Switching on of the warning lamp and/or warning message	-

Main customer complaints likely	No effects immediately perceptible to the customer
	Absence of automatic stopping of the internal combustion engine (Vehicle equipped with "stop and start")
Suspect areas	Brake pedal switch
	Fuse
	Connectors
	Electrical harnesses

Fault code(s): P0703 or P1536



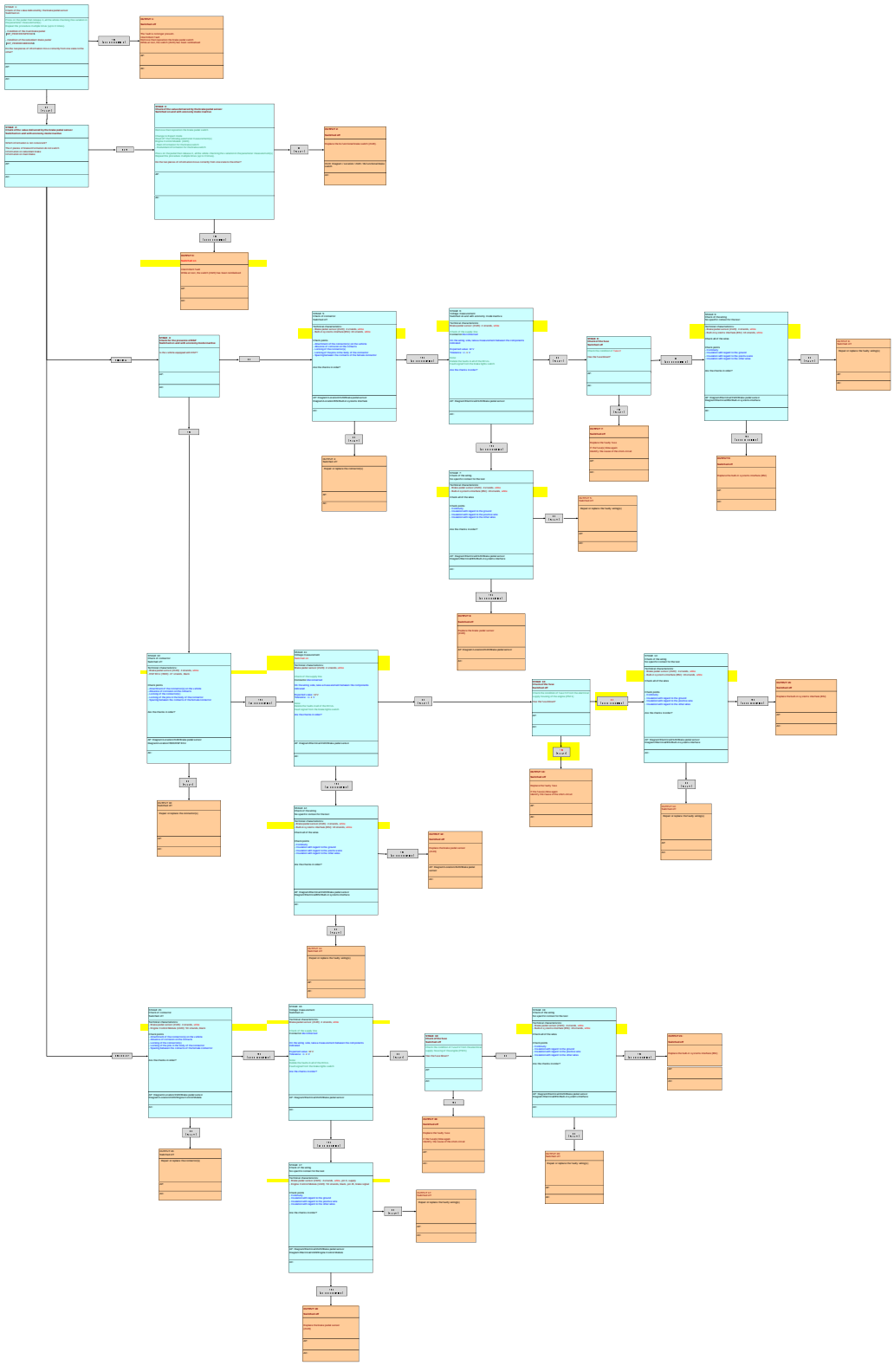

INFORMATION : FAULT CODE P15B3 (ENGINE ECU)

SPECIAL FEATURE :

FOR : 1CMJ - B0FBM : DV6C TURBO DIESEL

FOR : 1PMJ - B0FBM : DV6C TURBO DIESEL

Engine ECU CONTINENTAL SID 807 branch 2	
Fault code	P15B3
After sales description of the fault code	Additive adding : Additive level calculated lower than the minimum threshold
Description of the diagnostics	The engine management ECU indicates that the additive minimum level has been reached
Conditions of activation of the diagnostics	Engine running
Conditions of disappearance of the fault	Driving for 5 minutes
Down-grade modes if fault present	Display of the message "Risk of clogging of the particle filter"
	Deactivation of the request for regeneration of the particle filter from the diagnostic tool
	Switching to fuel "normal reduced flow" mode
Switching on of the warning lamp and/or warning message	"SERVICE" warning lamp
Main customer complaints likely	Starting problem
	Lack of power
Suspect areas	Particle filter additive reservoir
	Particle filter additive

Fault code(s): P1446 or P15B3

Reminder DTC

Do not fill in this section for the FLOW CHART phase

DTC no.	Aftersales text of the DTC	Fault type	Conditions for fault finding	Downgraded mode after a fault is ascertained	Illumination of the warning lamp	Suspected areas Major control steps	The client effect(s)/symptom(s) associated with the DTCs	Fault code(s) to be dealt with before working through this flow chart	Tools required
P1446	Addition of additive: Additive level calculated lower than the critical threshold	B							
P15B3	Addition of additive: Additive level calculated lower than the minimum threshold	B							

PRE-CHECK

FLOW CHART Test procedure

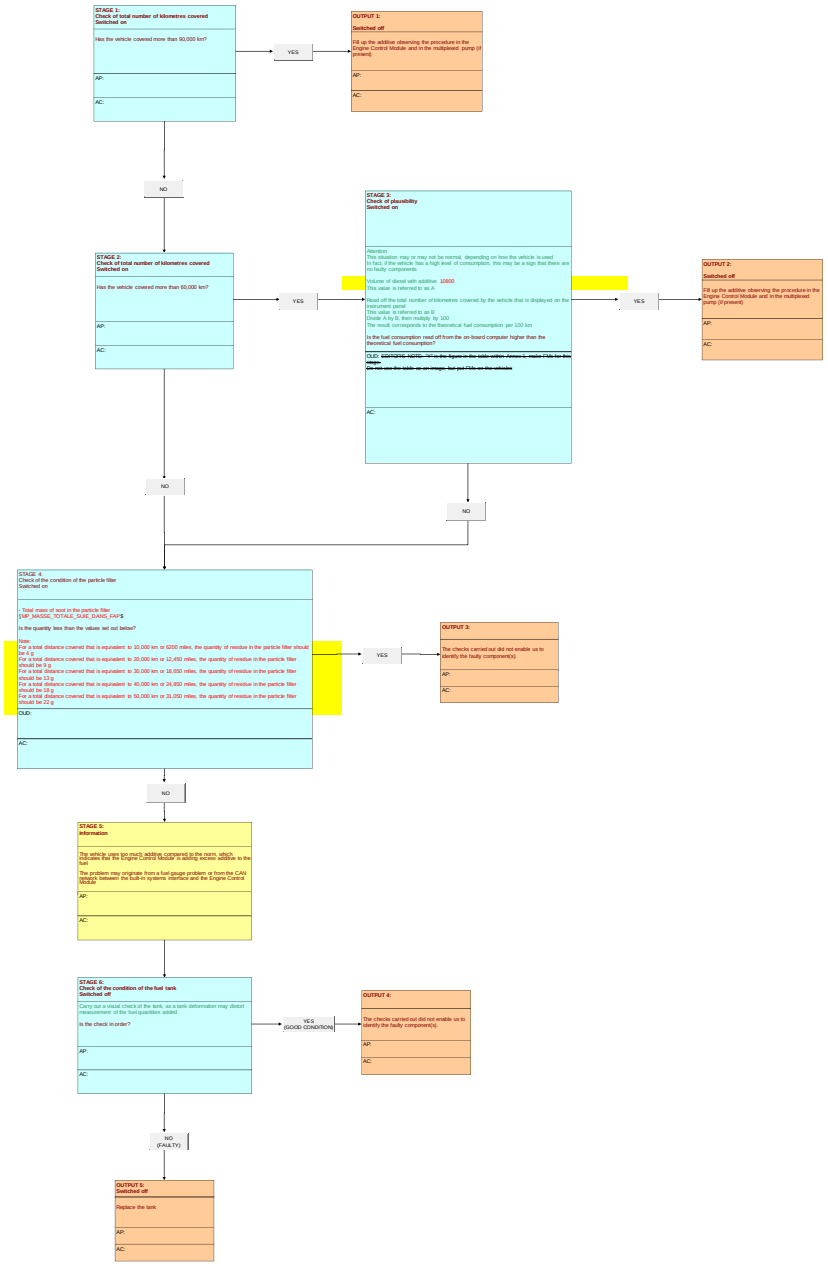

INFORMATION : FAULT CODE P160A (ENGINE ECU)

SPECIAL FEATURE :

FOR : 1CB7 - B0FBM : DV6C TURBO DIESEL

FOR : 1CX7 - B0FBM : DV6C TURBO DIESEL

FOR : 1C58 - B0FBM : DV6C TURBO DIESEL

FOR : 1PT7 - B0FBM : DV6C TURBO DIESEL

FOR : 1PW2 - B0FBM : DV6C TURBO DIESEL

FOR : 1CB8 - B0FBM : DV6C TURBO DIESEL

FOR : 1CXA - B0FBM : DV6C TURBO DIESEL

FOR : 1CYA - B0FBM : DV6C TURBO DIESEL

FOR : 1PTB - B0FBM : DV6C TURBO DIESEL

FOR : 1PTC - B0FBM : DV6C TURBO DIESEL

FOR : 1PIA - B0FBM : DV6C TURBO DIESEL

FOR : 1CMJ - B0FBM : DV6C TURBO DIESEL

FOR : 1PMJ - B0FBM : DV6C TURBO DIESEL

Engine ECU CONTINENTAL SID 807 branch 2	
Fault code	P160A
After sales description of the fault code	Downloading / Configuration : Homologation no. configuration fault
Description of the diagnostics	Downloading fault or homologation no. configuration fault
Conditions of activation of the diagnostics	-
Conditions of disappearance of the fault	-
Down-grade modes if fault present	-
Switching on of the warning lamp and/or warning message	Flashing of warning lamp MIL

Main customer complaints likely	Jerking/stalling
	Starting problem
Suspect areas	Engine ECU

Fault code(s): P1613 or P160A or P062B

Reminder DTC

Do not fill in this section for the FLOW CHART phase

DTC no.	Aftersales text of the DTC	Fault type	Conditions for fault finding	Downgraded mode after a fault is ascertained	Does it all turn on a warning light	Suspected areas Major control steps	The client effect(s)/symptom(s) associated with the DTCs	Fault code(s) to be dealt with before working through this flow chart	Tools required
P1613	Reprogramming/Telecoding: Telecoding fault in the ECU configuration (use P0610)	EE							
P160A	Reprogramming / Telecoding: Telecoding fault in approval number	EE							
P062B	Reprogramming / Telecoding: Telecoding for the injector reset not carried out	EE			SERVICE				

PRE-CHECK

FLOW CHART Test procedure

STAGE 1:
Intervention

Is fault code is linked to telecoding that has not been carried out

If fault P1613 is present
Carry out the telecoding of the configuration for the Engine Control Module

If fault P160A is present
Carry out the telecoding of the approval number

If fault P062B is present
Carry out the telecoding of the class of injectors

AP:

AC:

INFORMATION : FAULT CODE P1612 (ENGINE ECU)

SPECIAL FEATURE :

FOR : 1CB7 - B0FBM : DV6C TURBO DIESEL

FOR : 1CX7 - B0FBM : DV6C TURBO DIESEL

FOR : 1C58 - B0FBM : DV6C TURBO DIESEL

FOR : 1PT7 - B0FBM : DV6C TURBO DIESEL

FOR : 1PW2 - B0FBM : DV6C TURBO DIESEL

FOR : 1CB8 - B0FBM : DV6C TURBO DIESEL

FOR : 1CXA - B0FBM : DV6C TURBO DIESEL

FOR : 1CYA - B0FBM : DV6C TURBO DIESEL

FOR : 1PTB - B0FBM : DV6C TURBO DIESEL

FOR : 1PTC - B0FBM : DV6C TURBO DIESEL

FOR : 1PIA - B0FBM : DV6C TURBO DIESEL

FOR : 1CMJ - B0FBM : DV6C TURBO DIESEL

FOR : 1PMJ - B0FBM : DV6C TURBO DIESEL

Engine ECU CONTINENTAL SID 807 branch 2	
Fault code	P1612
After sales description of the fault code	ECU : EEPROM internal fault (Coded anti-start)
Description of the diagnostics	Fault internal to the engine ECU
	The coded immobiliser detected blocked fault is forwarded after 2 seconds
Conditions of activation of the diagnostics	engine running
Conditions of disappearance of the fault	Driving for 5 minutes
Down-grade modes if fault present	-
Switching on of the warning lamp and/or warning	-

message	
Main customer complaints likely	Starting problem
Suspect areas	Coded anti-start

Fault code(s): P1612

Reminder DTC

Do not fill in this section for the FLOW CHART phase

DTC no.	Aftersales text of the DTC	Fault type	Conditions for fault finding	Downgraded mode after a fault is ascertained	Illumination of warning light	Suspected areas Major control steps	The client effect(s)/symptom(s) associated with the DTCs	Fault code(s) to be dealt with before working through this flow chart	Tools required
P1612	ECU: Internal EEPROM fault (ignition interlock code)								
					SERVICE				

PRE-CHECK

FLOW CHART Test procedure

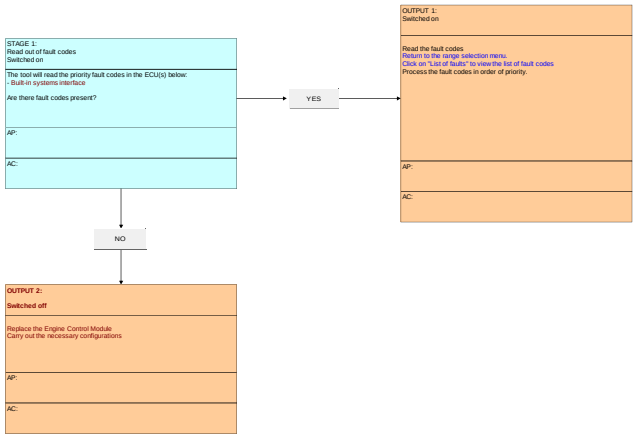

INFORMATION : FAULT CODE P1613 (ENGINE ECU)

SPECIAL FEATURE :

FOR : 1CB7 - B0FBM : DV6C TURBO DIESEL

FOR : 1CX7 - B0FBM : DV6C TURBO DIESEL

FOR : 1C58 - B0FBM : DV6C TURBO DIESEL

FOR : 1PT7 - B0FBM : DV6C TURBO DIESEL

FOR : 1PW2 - B0FBM : DV6C TURBO DIESEL

FOR : 1CB8 - B0FBM : DV6C TURBO DIESEL

FOR : 1CXA - B0FBM : DV6C TURBO DIESEL

FOR : 1CYA - B0FBM : DV6C TURBO DIESEL

FOR : 1PTB - B0FBM : DV6C TURBO DIESEL

FOR : 1PTC - B0FBM : DV6C TURBO DIESEL

FOR : 1PIA - B0FBM : DV6C TURBO DIESEL

FOR : 1CMJ - B0FBM : DV6C TURBO DIESEL

FOR : 1PMJ - B0FBM : DV6C TURBO DIESEL

Engine ECU CONTINENTAL SID 807 branch 2	
Fault code	P1613
After sales description of the fault code	Downloading / Configuration : Downloading fault of the configuration of the ECU
Description of the diagnostics	Fault in downloading or programming of the ECU configuration
Conditions of activation of the diagnostics	-
Conditions of disappearance of the fault	-
Down-grade modes if fault present	-
Switching on of the warning lamp and/or warning message	Flashing of warning lamp MIL

Main customer complaints likely	Jerking/stalling
	Starting problem
	Lack of power
Suspect areas	Engine ECU

Fault code(s): P1613 or P160A or P062B

Reminder DTC

Do not fill in this section for the FLOW CHART phase

DTC no.	Aftersales text of the DTC	Fault type	Conditions for fault finding	Downgraded mode after a fault is ascertained	Does it all turn on a warning light	Suspected areas Major control steps	The client effect(s)/symptom(s) associated with the DTCs	Fault code(s) to be dealt with before working through this flow chart	Tools required
P1613	Reprogramming/Telecoding: Telecoding fault in the ECU configuration (use P0610)	EE							
P160A	Reprogramming / Telecoding: Telecoding fault in approval number	EE							
P062B	Reprogramming / Telecoding: Telecoding for the injector reset not carried out	EE			SERVICE				

PRE-CHECK

FLOW CHART Test procedure

STAGE 1:
Intervention

Is fault code is linked to telecoding that has not been carried out

If fault P1613 is present
Carry out the telecoding of the configuration for the Engine Control Module

If fault P160A is present
Carry out the telecoding of the approval number

If fault P062B is present
Carry out the telecoding of the class of injectors

AP:

AC:

INFORMATION : FAULT CODE P1621 (ENGINE ECU)

SPECIAL FEATURE :

FOR : 1CB7 - B0FBM : DV6C TURBO DIESEL

FOR : 1CX7 - B0FBM : DV6C TURBO DIESEL

FOR : 1C58 - B0FBM : DV6C TURBO DIESEL

FOR : 1PT7 - B0FBM : DV6C TURBO DIESEL

FOR : 1PW2 - B0FBM : DV6C TURBO DIESEL

FOR : 1CB8 - B0FBM : DV6C TURBO DIESEL

FOR : 1CXA - B0FBM : DV6C TURBO DIESEL

FOR : 1CYA - B0FBM : DV6C TURBO DIESEL

FOR : 1PTB - B0FBM : DV6C TURBO DIESEL

FOR : 1PTC - B0FBM : DV6C TURBO DIESEL

FOR : 1PIA - B0FBM : DV6C TURBO DIESEL

FOR : 1CMJ - B0FBM : DV6C TURBO DIESEL

FOR : 1PMJ - B0FBM : DV6C TURBO DIESEL

Engine ECU CONTINENTAL SID 807 branch 2	
Fault code	P1621
After sales description of the fault code	Computer : Software redundancy fault at the injection (Level 2)
Description of the diagnostics	Fault internal to the engine ECU on the torque calculation functions (For 500 ms)
Conditions of activation of the diagnostics	Engine running
Conditions of disappearance of the fault	Driving for 5 minutes
Down-grade modes if fault present	Function for limitation of the static torque for the protection of the gearbox
	Irreversible deactivation of the vehicle cruise control
Switching on of the warning lamp and/or warning	"SERVICE" warning lamp

message	
Main customer complaints likely	Jerking/stalling
	Starting problem
	Lack of power
Suspect areas	Engine ECU

Fault code(s): P0606 or P0667 or P0668 or P0669 or P1621 or P1631

Reminder DTC

Do not do this section for the FLOW CHART phase

DTC no.	Alternates text of the DTC	Multi trips	Conditions for fault finding	Downgraded mode after a fault is ascertained	Lamp to be on by the ECU	Suspected areas Major control steps	The client effect(s)/symptom(s) associated with the DTC(s)	Fault code(s) to be dealt with before working through this flow chart	Tools required
P0606	ECU: "Watchdog" internal fault (Engine Control Module)	no							
P0667	ECU:internal temperature sensor: Voltage variation outside tolerance	no							
P0668	ECU:internal temperature sensor: Temperature too high	no							
P0669	ECU:internal temperature sensor: Temperature too low	no							
P1621	ECU: Software redundancy fault at injection level: (Level 2)	no							
P1631	ECU: Internal fault (injection with raised fuel)	no							

PRE-CHECK

FLOW CHART Test procedure

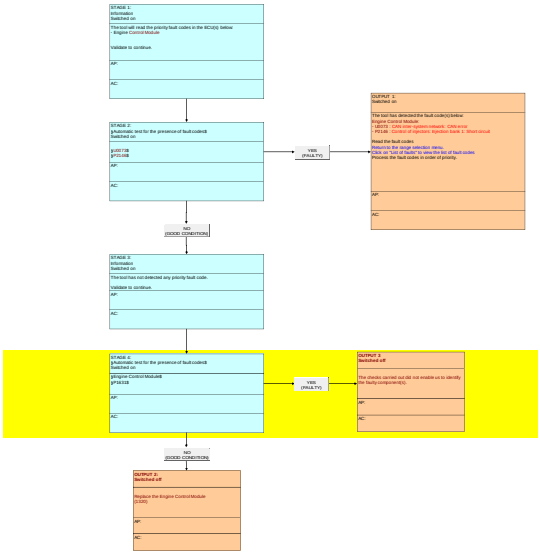

INFORMATION : FAULT CODE P1631 (ENGINE ECU)

SPECIAL FEATURE :

FOR : 1CB7 - B0FBM : DV6C TURBO DIESEL

FOR : 1CX7 - B0FBM : DV6C TURBO DIESEL

FOR : 1C58 - B0FBM : DV6C TURBO DIESEL

FOR : 1PT7 - B0FBM : DV6C TURBO DIESEL

FOR : 1PW2 - B0FBM : DV6C TURBO DIESEL

FOR : 1CB8 - B0FBM : DV6C TURBO DIESEL

FOR : 1CXA - B0FBM : DV6C TURBO DIESEL

FOR : 1CYA - B0FBM : DV6C TURBO DIESEL

FOR : 1PTB - B0FBM : DV6C TURBO DIESEL

FOR : 1PTC - B0FBM : DV6C TURBO DIESEL

FOR : 1PIA - B0FBM : DV6C TURBO DIESEL

FOR : 1CMJ - B0FBM : DV6C TURBO DIESEL

FOR : 1PMJ - B0FBM : DV6C TURBO DIESEL

Engine ECU CONTINENTAL SID 807 branch 2	
Fault code	P1631
After sales description of the fault code	Computer : internal fault (Injection with the foot lifted)
Description of the diagnostics	Fault internal to the engine ECU on the torque calculation functions (For 500 ms)
Conditions of activation of the diagnostics	engine running
Conditions of disappearance of the fault	Driving for 5 minutes
Down-grade modes if fault present	-
Switching on of the warning lamp and/or warning message	"SERVICE" warning lamp
Main customer complaints likely	Jerking/stalling
	Lack of power
	Starting problem
Suspect areas	Engine ECU

Fault code(s): P0606 or P0667 or P0668 or P0669 or P1621 or P1631

Reminder DTC

Do not fill in this section for the FLOW CHART phase

DTC no.	Alternates text of the DTC	Multi type	Conditions for fault finding	Downgraded mode after a fault is ascertained	Lamp to be illuminated	Suspected areas Major control steps	The client effect(s)/symptom(s) associated with the DTC(s)	Fault code(s) to be dealt with before working through this flow chart	Tools required
P0606	ECU: "Watchdog" internal fault (Engine Control Module)	no							
P0667	ECU:internal temperature sensor: Voltage variation outside tolerance	no							
P0668	ECU:internal temperature sensor: Temperature too high	no							
P0669	ECU:internal temperature sensor: Temperature too low	no							
P1621	ECU: Software redundancy fault at injection level: (Level 2)	no							
P1631	ECU: Internal fault (injection with raised fuel)	no							

PRE-CHECK

FLOW CHART Test procedure

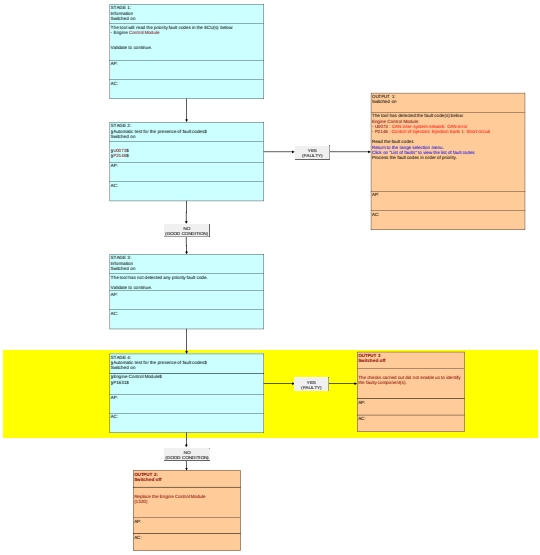

INFORMATION : FAULT CODE P1641 (ENGINE ECU)

SPECIAL FEATURE :

FOR : 1CB7 - B0FBM : DV6C TURBO DIESEL

FOR : 1CX7 - B0FBM : DV6C TURBO DIESEL

FOR : 1C58 - B0FBM : DV6C TURBO DIESEL

FOR : 1PT7 - B0FBM : DV6C TURBO DIESEL

FOR : 1PW2 - B0FBM : DV6C TURBO DIESEL

FOR : 1CB8 - B0FBM : DV6C TURBO DIESEL

FOR : 1CXA - B0FBM : DV6C TURBO DIESEL

FOR : 1CYA - B0FBM : DV6C TURBO DIESEL

FOR : 1PTB - B0FBM : DV6C TURBO DIESEL

FOR : 1PTC - B0FBM : DV6C TURBO DIESEL

FOR : 1PIA - B0FBM : DV6C TURBO DIESEL

FOR : 1CMJ - B0FBM : DV6C TURBO DIESEL

FOR : 1PMJ - B0FBM : DV6C TURBO DIESEL

Engine ECU CONTINENTAL SID 807 branch 2	
Fault code	P1641
After sales description of the fault code	Computer : Failure of the initialisation of the injector bank, or harness fault
Description of the diagnostics	Engine management ECU internal fault detected for 400 ms
Conditions of activation of the diagnostics	At least one of the following conditions must be fulfilled - Ignition on - engine running
Conditions of disappearance of the fault	Driving for 5 minutes
Down-grade modes if fault present	Switching to fuel "normal reduced flow" mode
Switching on of the warning lamp	Warning lamp MIL

and/or warning message	"SERVICE" warning lamp
Main customer complaints likely	Jerking/stalling
	Noise
	Smoke from the exhaust
	Starting problem
	Lack of power
	Absence of automatic stopping of the internal combustion engine (If the vehicle has the Stop and Start system)
Suspect areas	Engine ECU
	Fuel injectors

Fault code(s): P0201 or P0202 or P0203 or P0204 or P0262 or P0265 or P0268 or P0271 or P062D or P1641 or P2146 or P2148

Reminder DTC

Do not fill in this section for the FLOW CHART phase

DTC no.	Alternate text of the DTC	Priority	Conditions for fault finding	Downgraded mode after a fault is ascertained	Operating safety (Operating safety)	Suspected areas Major control steps	The client effects(symptomatic) associated with the DTCs	Fault code(s) to be dealt with before working through this flow chart	Tools required
P0201	Control of injector 1: Open circuit on the circuit (wiring, injector, ECU)	A							
P0202	Control of injector 2: Open circuit on the circuit (wiring, injector, ECU)	A							
P0203	Control of injector 3: Open circuit on the circuit (wiring, injector, ECU)	A							
P0204	Control of injector 4: Open circuit on the circuit (wiring, injector, ECU)	A							
P0262	Control of injector 1: Short-circuit to positive on the circuit (wiring, injector, ECU)	A							
P0265	Control of injector 2: Short-circuit to positive on the circuit (wiring, injector, ECU)	A							
P0268	Control of injector 3: Short-circuit to positive on the circuit (wiring, injector, ECU)	A							
P0271	Control of injector 4: Short-circuit to positive on the circuit (wiring, injector, ECU)	A							
P062D	ECU voltage converter for control of the injectors faulty on bank 1	A							
P1641	ECU initialisation malfunction of the injector bank or wiring fault	A							
P2146	Injector control: injection bank 1: short-circuit	A							
P2148	Injector control: injection bank 1: voltage too high	A							

PRE-CHECK

FLOW CHART Test procedure

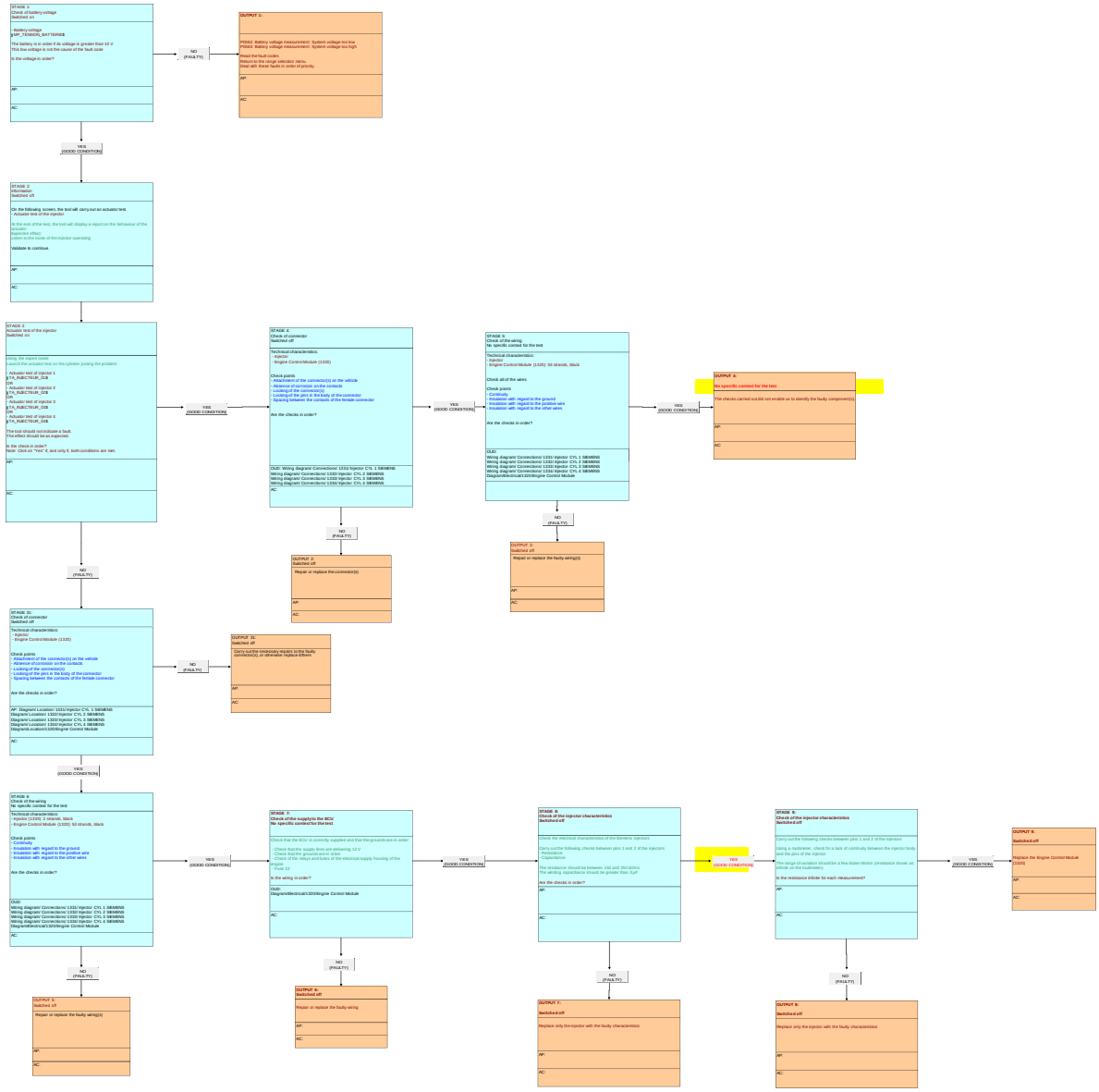

INFORMATION : FAULT CODE P1695 (ENGINE ECU)

SPECIAL FEATURE :

FOR : 1CB7 - B0FBM : DV6C TURBO DIESEL

FOR : 1CX7 - B0FBM : DV6C TURBO DIESEL

FOR : 1C58 - B0FBM : DV6C TURBO DIESEL

FOR : 1PT7 - B0FBM : DV6C TURBO DIESEL

FOR : 1PW2 - B0FBM : DV6C TURBO DIESEL

FOR : 1CB8 - B0FBM : DV6C TURBO DIESEL

FOR : 1CXA - B0FBM : DV6C TURBO DIESEL

FOR : 1CYA - B0FBM : DV6C TURBO DIESEL

FOR : 1PTB - B0FBM : DV6C TURBO DIESEL

FOR : 1PTC - B0FBM : DV6C TURBO DIESEL

FOR : 1PIA - B0FBM : DV6C TURBO DIESEL

FOR : 1CMJ - B0FBM : DV6C TURBO DIESEL

FOR : 1PMJ - B0FBM : DV6C TURBO DIESEL

Engine ECU CONTINENTAL SID 807 branch 2	
Fault code	P1695
After sales description of the fault code	Controlled engine start and stop : Motor jammed
Description of the diagnostics	Fault in communication between ECUs detected by a starter request, an engine speed of zero and a drop in the battery voltage of 9 V
Conditions of activation of the diagnostics	Engine running
Conditions of disappearance of the fault	Driving for 5 minutes
Down-grade modes if fault present	-
Switching on of the warning lamp and/or warning	"SERVICE" warning lamp

message	
Main customer complaints likely	Starting problem
Suspect areas	Engine ECU
	Intersystem CAN network
	Starter

Fault code(s): P1695 or P1696

Remember DTC:

Be sure DTC is also mentioned on the FLOW CHART sheet

DTC on	Alternative text of the DTC	Fault code	Conditions for fault finding	Geographical area where DTC is ascertained	Priority of fault code	Suspected areas Major control stages	The silent effect/symptom(s) encountered with the DTC's	Fault code(s) to be dealt with before working on the fault code in this line	Tools required
P1695	Start up and stop of piloted engine: Engine blocked	no			A				
P1696	Start up and stop of piloted engine: Simultaneously request for start up and stop	no			A				
					A				

PRECHECK

FLOW CHART Test procedure

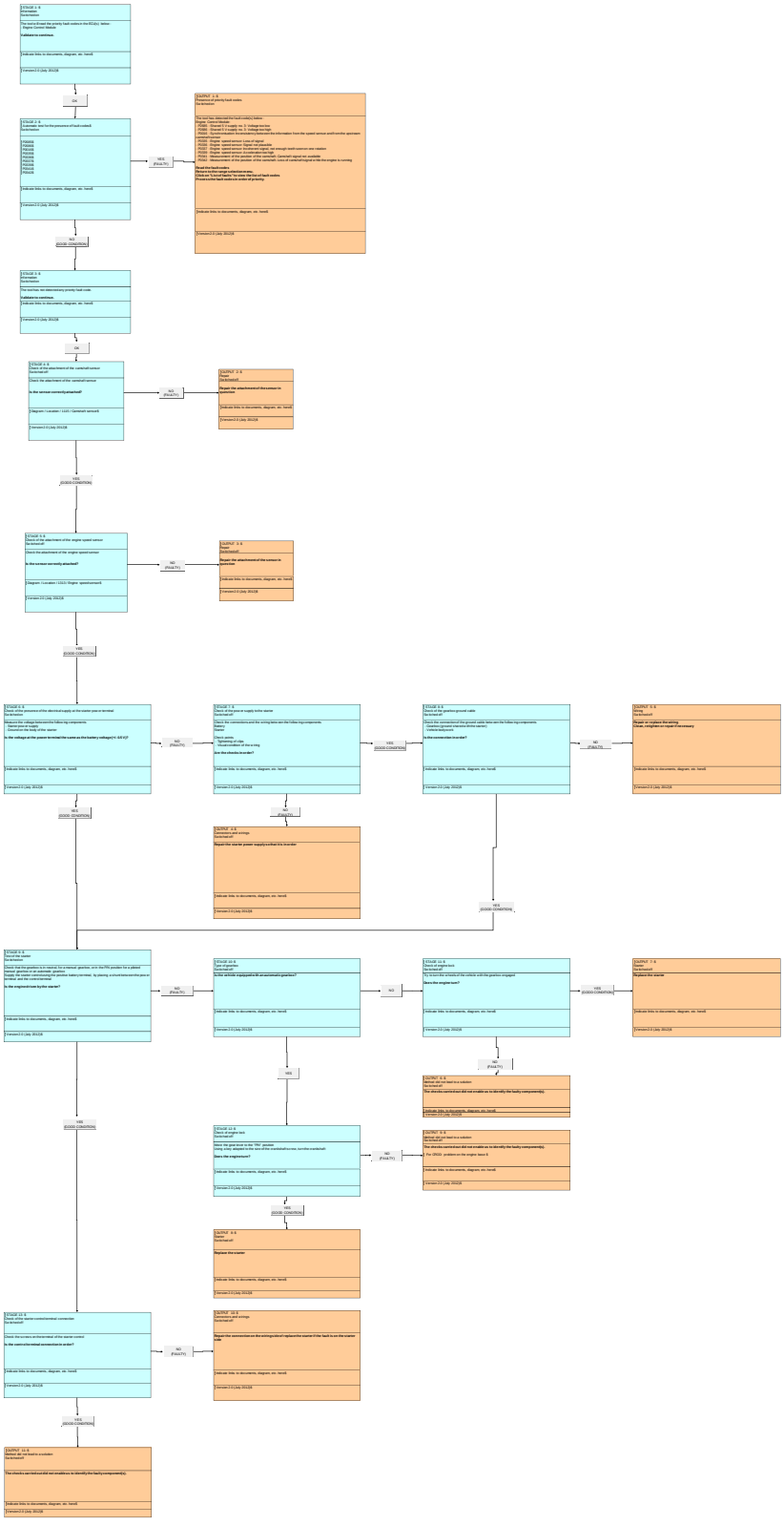

INFORMATION : FAULT CODE P1696 (ENGINE ECU)

SPECIAL FEATURE :

FOR : 1CB7 - B0FBM : DV6C TURBO DIESEL

FOR : 1CX7 - B0FBM : DV6C TURBO DIESEL

FOR : 1C58 - B0FBM : DV6C TURBO DIESEL

FOR : 1PT7 - B0FBM : DV6C TURBO DIESEL

FOR : 1PW2 - B0FBM : DV6C TURBO DIESEL

FOR : 1CB8 - B0FBM : DV6C TURBO DIESEL

FOR : 1CXA - B0FBM : DV6C TURBO DIESEL

FOR : 1CYA - B0FBM : DV6C TURBO DIESEL

FOR : 1PTB - B0FBM : DV6C TURBO DIESEL

FOR : 1PTC - B0FBM : DV6C TURBO DIESEL

FOR : 1PIA - B0FBM : DV6C TURBO DIESEL

FOR : 1CMJ - B0FBM : DV6C TURBO DIESEL

FOR : 1PMJ - B0FBM : DV6C TURBO DIESEL

Engine ECU CONTINENTAL SID 807 branch 2	
Fault code	P1696
After sales description of the fault code	Controlled engine start and stop : Simultaneous starting and stopping request
Description of the diagnostics	Simultaneous engine starting and stopping request detected for 2 seconds
Conditions of activation of the diagnostics	engine running
Conditions of disappearance of the fault	Driving for 5 minutes
Down-grade modes if fault present	-
Switching on of the warning lamp and/or warning message	"SERVICE" warning lamp

Main customer complaints likely	Jerking/stalling
	Starting problem
	Lack of power
Suspect areas	Engine ECU

Fault code(s): P1695 or P1696

Remember DTC:

Be sure DTC is cleared before the FLOW CHART phase

DTC no.	Alternative text of the DTC	Fail-safe	Conditions for fault finding	Distinguished areas that can be ascertained	Priority of fault finding	Suspected areas Major control stages	The silent effect/symptom(s) encountered with the DTC	Fault code(s) to be dealt with before working according to this flow chart	Tools required
P1695	Start-up and stop of piloted engine: Engine not start	no			A				
P1696	Start-up and stop of piloted engine: Simultaneously request for start-up and stop	no			A				
					B				

PRE-CHECK

FLOW CHART Test procedure

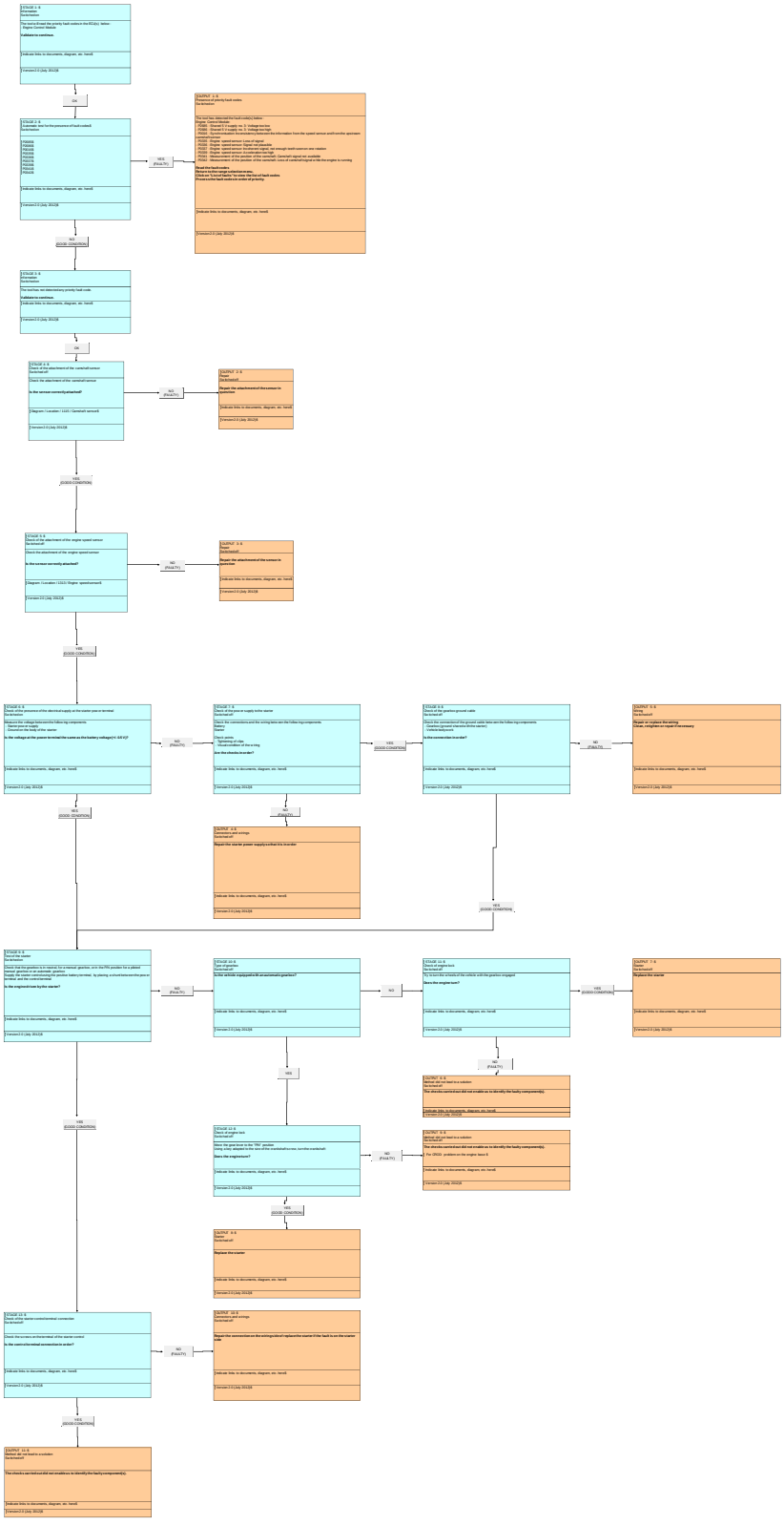

INFORMATION : FAULT CODE P16A0 (ENGINE MANAGEMENT ECU)

SPECIAL FEATURE :

FOR : 1CMJ - B0FBM : DV6C TURBO DIESEL

FOR : 1PMJ - B0FBM : DV6C TURBO DIESEL

Engine ECU CONTINENTAL SID 807 branch 2	
Fault code	P16A0
After sales description of the fault code	Engine : Detection of runaway caused by oil ingestion after stalling
Description of the diagnostics	Possibility 1 During the pedal released phase, the mixture is higher than 0,5 for 1 seconds
	Possibility 2 During the pedal released phase, the turbocharging pressure is higher than 2,95 bars
	Possibility 3 In the clutch released position, the engine speed is higher than 6100 rpm
Conditions of activation of the diagnostics	At least one of the following conditions must be fulfilled - In the pedal release phase - Clutch in released position
Conditions of disappearance of the fault	Driving for 5 minutes with several full load accelerations followed by pedal releases
Down-grade modes if fault present	Cutting of fuel injector 1
	Cutting of fuel injector 2
	Cutting of fuel injector 3
	Cutting of fuel injector 4
	Closing of the EGR (exhaust gas recycling) valve
	Closing of the air mixer
	Irreversible deactivation of the vehicle speed limiter
	Irreversible deactivation of the vehicle cruise control
	Change to fuel maximum reduced flow mode
	Maximum opening of the turbocharger geometry
	Switching of the turbocharging pressure regulation to controlled mode
	Deactivation of the "easy-move" (electric parking brake) functionality
	Function for limitation of the static torque for the protection of the gearbox

Switching on of the warning lamp and/or warning message	"SERVICE" warning lamp
Main customer complaints likely	Engine acceleration at wrong time
	Noise
	Fluid leak/smells (diesel fuel, oil, etc.)
	Jerking/stalling
	Smoke from the exhaust
	Lack of power
Suspect areas	Piston - Segment - Shaft - Cooling system
	Oil trap
	Turbocharger
	Turbocharger variable geometry position repeat sensor
	Electrical harness
	Connectors

Fault code(s): P16A0



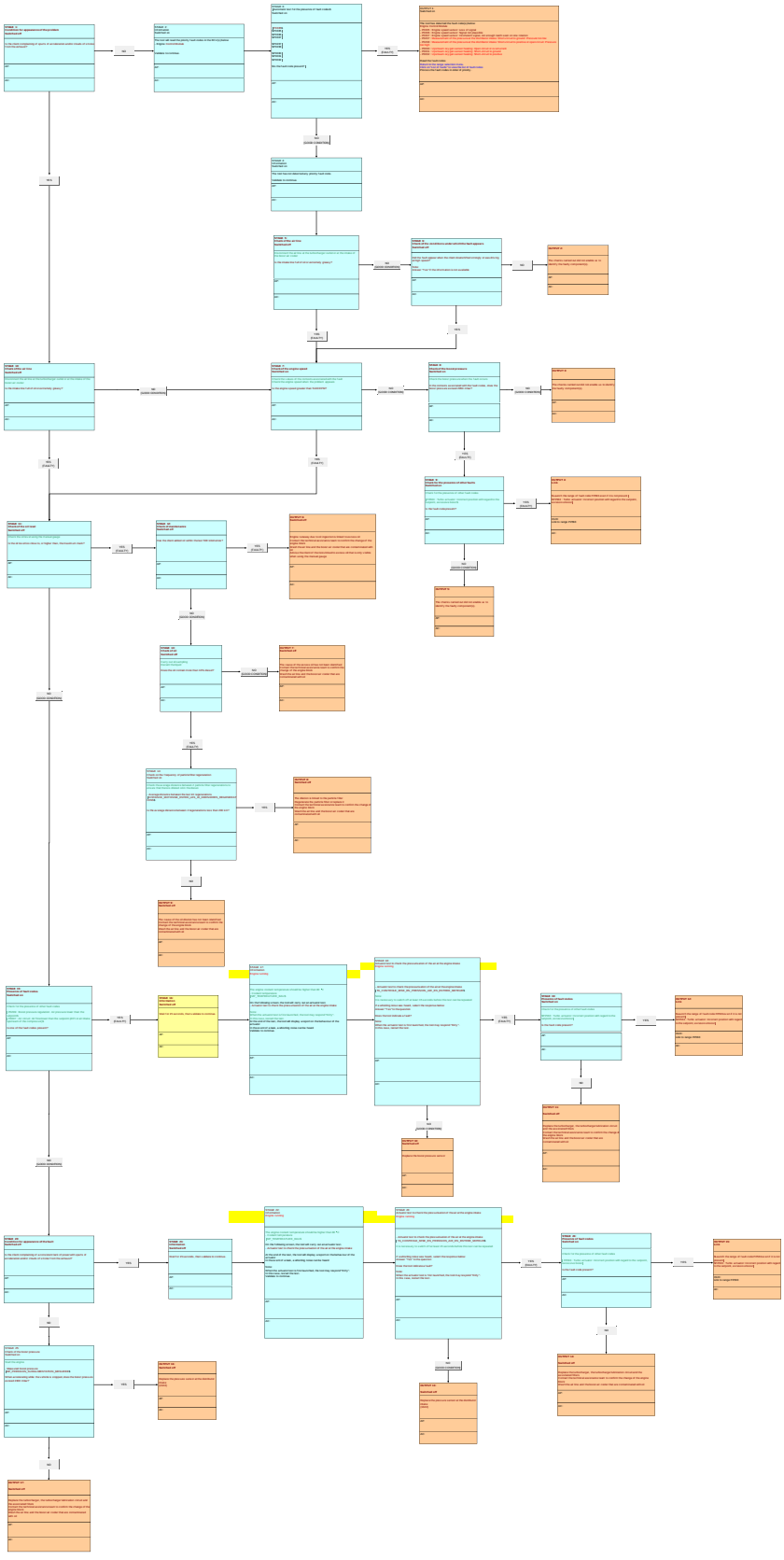

INFORMATION : FAULT CODE P16C5 (ENGINE ECU)

Engine ECU CONTINENTAL SID 807 branch 2	
Fault code	P16C5
After sales description of the fault code	Intersystems CAN : Button press filtering problem
Description of the diagnostics	Lack of coherence on the steering wheel controls button press confirmation filtering
Conditions of activation of the diagnostics	-
Conditions of disappearance of the fault	Driving for 5 minutes
Down-grade modes if fault present	Reversible deactivation of the vehicle cruise control
Switching on of the warning lamp and/or warning message	-
Main customer complaints likely	-
Suspect areas	Engine ECU
	Cruise control steering wheel controls

Fault code(s): P0590 or P0591 or P16C5 or P16C7

Reminder DTC

DTC no.	Alternate text of the DTC	Do not fill in this column	Area/zones for the FLOW CHART phase						
		Hard fault	Conditions for fault finding	Downgraded mode after a fault is ascertained	Immediate danger	Suspected areas Major control steps	The client effects(Diagnostic) associated with the DTCs	Fault code(s) to be dealt with before working through this flow chart	Tools required
P0590	CAN inter-system network: Control fault in regulation of vehicle speed	X							
P0591	CAN inter-system network: Incorrect information on regulation of vehicle speed	X							
P16C5	CAN inter-system network: Filtering problem touch pin/count	X			DANGER				
P16C7	CAN inter-system network: Poor vehicle configuration concerning the vehicle speed limiter and gearbox	X							

PRE-CHECK

FLOW CHART Test procedure

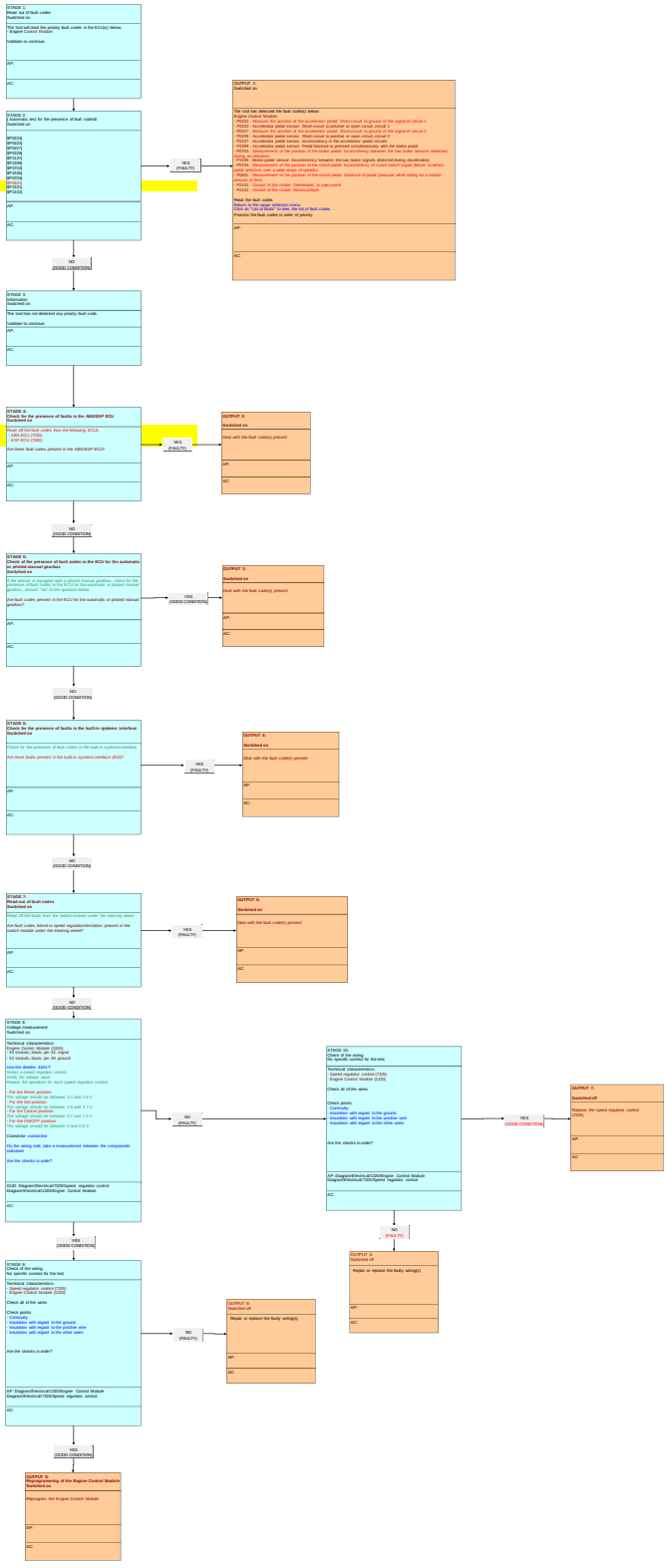

INFORMATION : FAULT CODE P16C7 (ENGINE ECU)

Engine ECU CONTINENTAL SID 807 branch 2	
Fault code	P16C7
After sales description of the fault code	Intersystems CAN : Incorrect configuration of the vehicle concerning the speed limiter and the gearbox
Description of the diagnostics	Incorrect configuration of the vehicle concerning the speed limiter and the gearbox
Conditions of activation of the diagnostics	-
Conditions of disappearance of the fault	Driving for 5 minutes
Down-grade modes if fault present	Irreversible deactivation of the vehicle cruise control
Switching on of the warning lamp and/or warning message	-
Main customer complaints likely	-
Suspect areas	Engine ECU

Fault code(s): P0590 or P0591 or P16C5 or P16C7

Reminder DTC

Do not st...ions for the FLOW CHART phase

DTC no.	Alternate text of the DTC	Hard fault	Conditions for fault finding	Downgraded mode after a fault is ascertained	Illuminated Warning Lamp	Suspected areas Major control steps	The client ellm=[02]engine[/02] associated with the DTCs	Fault code[s] to be dealt with before working through this flow chart	Tools required
P0590	CAN inter-system network: Control fault in regulation of vehicle speed	X							
P0591	CAN inter-system network: Incorrect information on regulation of vehicle speed	X							
P16C5	CAN inter-system network: Filtering problem touch pin/count	X			DPNV5				
P16C7	CAN inter-system network: Poor vehicle configuration concerning the vehicle speed limiter and gearbox	X							

PRE-CHECK

FLOW CHART Test procedure

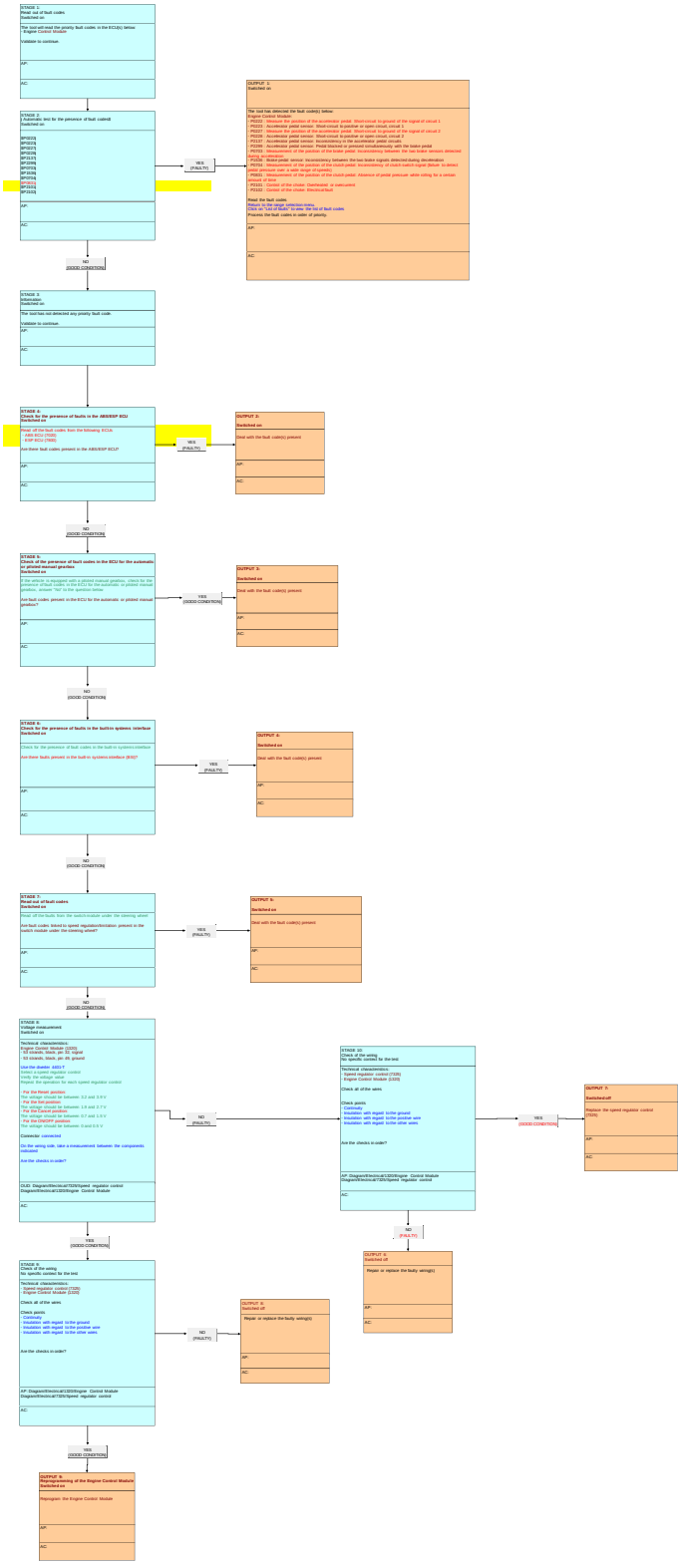

INFORMATION : FAULT CODE P2031 (ENGINE ECU)

SPECIAL FEATURE :

FOR : 1CB7 - B0FBM : DV6C TURBO DIESEL

FOR : 1CB8 - B0FBM : DV6C TURBO DIESEL

FOR : 1CXA - B0FBM : DV6C TURBO DIESEL

FOR : 1CX7 - B0FBM : DV6C TURBO DIESEL

FOR : 1CYA - B0FBM : DV6C TURBO DIESEL

FOR : 1C58 - B0FBM : DV6C TURBO DIESEL

FOR : 1PIA - B0FBM : DV6C TURBO DIESEL

FOR : 1PTB - B0FBM : DV6C TURBO DIESEL

FOR : 1PTC - B0FBM : DV6C TURBO DIESEL

FOR : 1PT7 - B0FBM : DV6C TURBO DIESEL

FOR : 1PW2 - B0FBM : DV6C TURBO DIESEL

FOR : 1CMJ - B0FBM : DV6C TURBO DIESEL

FOR : 1PMJ - B0FBM : DV6C TURBO DIESEL

Engine ECU CONTINENTAL SID 807 branch 2	
Fault code	P2031
After sales description of the fault code	Particle emission filter upstream temperature measurement : Plausibility when starting
Description of the diagnostics	Plausibility fault : Particle filter upstream temperature above 700°C on starting
Conditions of activation of the diagnostics	The following conditions have to be met - Engine running - Engine coolant temperature lower than 35°C - Do not be in particle filter regeneration
Conditions of disappearance of the fault	Driving for 5 minutes
Down-grade modes if fault present	Deactivation of the request for regeneration of the particle filter from the diagnostic tool

	Switching to fuel "normal reduced flow" mode
Switching on of the warning lamp and/or warning message	Warning lamp MIL
	"SERVICE" warning lamp
Main customer complaints likely	-
Suspect areas	Particle filter upstream temperature sensor
	Electrical harness
	connectors

Fault code(s): P2031 or P2032 or P2033

Reminder DTC

Do not fill in this section for the FLOW CHART phase

DTC no.	Alfanulate text of the DTC	Fault type	Conditions for fault finding	Downgraded mode after a fault is memorised	Driver warning light	Suspected areas Major control loops	The client «The(s)(symptom(s) associated with the DTC»	Fault code(s) to be dealt with before working through this flow chart	Tools required
P2031	Temperature sensor upstream of particle filter: Plausibility at start up	00							
P2032	Temperature sensor upstream of particle filter: Short-circuit to ground: Temperature too high	01							
P2033	Temperature sensor upstream of particle filter: Short-circuit to positive: Temperature too low	02							

PRE-CHECK

FLOW CHART Test procedure

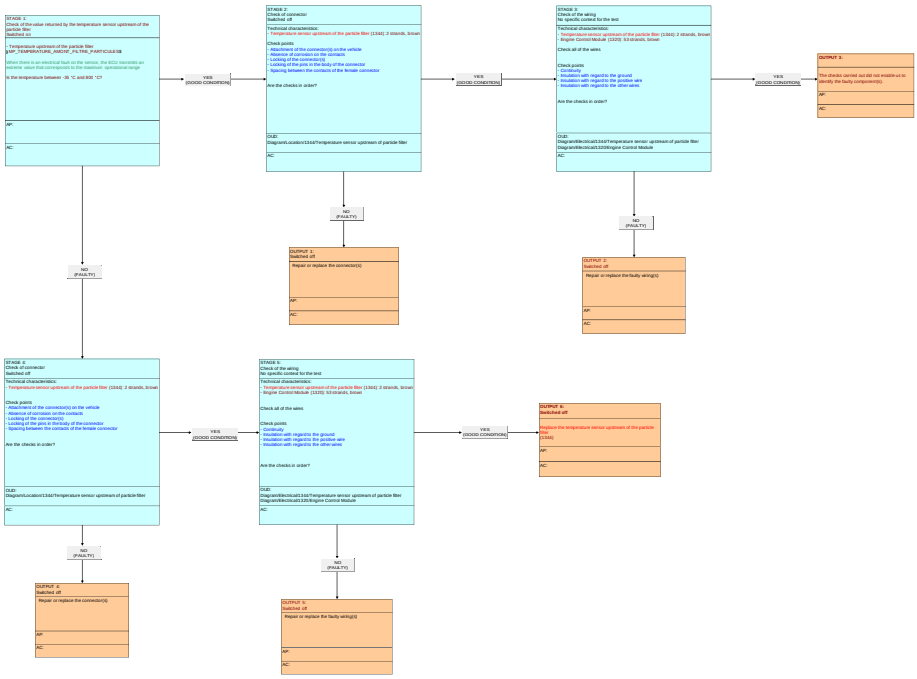

INFORMATION : FAULT CODE P2032 (ENGINE ECU)

SPECIAL FEATURE :

FOR : 1CB7 - B0FBM : DV6C TURBO DIESEL

FOR : 1CB8 - B0FBM : DV6C TURBO DIESEL

FOR : 1CXA - B0FBM : DV6C TURBO DIESEL

FOR : 1CX7 - B0FBM : DV6C TURBO DIESEL

FOR : 1CYA - B0FBM : DV6C TURBO DIESEL

FOR : 1C58 - B0FBM : DV6C TURBO DIESEL

FOR : 1PIA - B0FBM : DV6C TURBO DIESEL

FOR : 1PTB - B0FBM : DV6C TURBO DIESEL

FOR : 1PTC - B0FBM : DV6C TURBO DIESEL

FOR : 1PT7 - B0FBM : DV6C TURBO DIESEL

FOR : 1PW2 - B0FBM : DV6C TURBO DIESEL

FOR : 1CMJ - B0FBM : DV6C TURBO DIESEL

FOR : 1PMJ - B0FBM : DV6C TURBO DIESEL

Engine ECU CONTINENTAL SID 807 branch 2	
Fault code	P2032
After sales description of the fault code	Particle emission filter upstream temperature measurement : Short circuit to earth
Description of the diagnostics	Electrical fault. Voltage less than 0,1 V for 500 ms
Conditions of activation of the diagnostics	Engine running
Conditions of disappearance of the fault	Driving for 5 minutes
Down-grade modes if fault present	Deactivation of the request for regeneration of the particle filter from the diagnostic tool
	Switching to fuel "normal reduced flow" mode
Switching on of the warning lamp and/or warning	Warning lamp MIL
	"SERVICE" warning lamp

message	
Main customer complaints likely	-
Suspect areas	Particle filter upstream temperature sensor
	Electrical harness
	Connectors

Fault code(s): P2031 or P2032 or P2033

Reminder DTC

Do not fill in this section for the FLOW CHART phase

DTC no.	Alfanulate text of the DTC	Fault type	Conditions for fault finding	Downgraded mode after a fault is memorised	Lamp warning on	Suspected areas Major control loops	The client «The(s)symptom(s) associated with the DTC»	Fault code(s) to be dealt with before working through this flow chart	Tools required
P2031	Temperature sensor upstream of particle filter: Plausibility at start up	00							
P2032	Temperature sensor upstream of particle filter: Short-circuit to ground: Temperature too high	01							
P2033	Temperature sensor upstream of particle filter: Short-circuit to positive: Temperature too low	02							

PRE-CHECK

FLOW CHART Test procedure

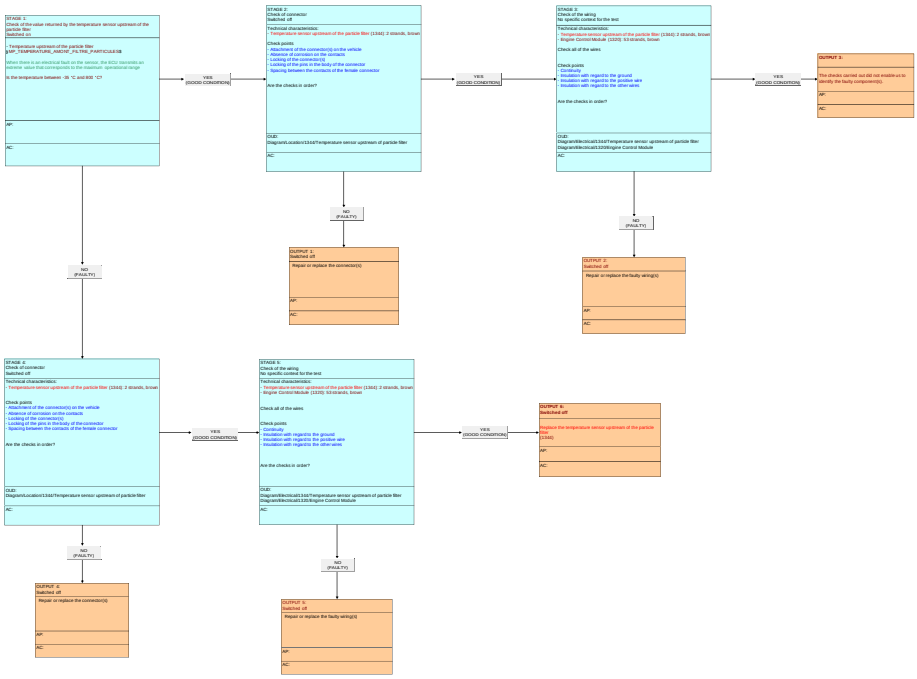

INFORMATION : FAULT CODE P2033 (ENGINE ECU)

SPECIAL FEATURE :

FOR : 1CB7 - B0FBM : DV6C TURBO DIESEL

FOR : 1CB8 - B0FBM : DV6C TURBO DIESEL

FOR : 1CXA - B0FBM : DV6C TURBO DIESEL

FOR : 1CX7 - B0FBM : DV6C TURBO DIESEL

FOR : 1CYA - B0FBM : DV6C TURBO DIESEL

FOR : 1C58 - B0FBM : DV6C TURBO DIESEL

FOR : 1PTB - B0FBM : DV6C TURBO DIESEL

FOR : 1PTC - B0FBM : DV6C TURBO DIESEL

FOR : 1PT7 - B0FBM : DV6C TURBO DIESEL

FOR : 1PW2 - B0FBM : DV6C TURBO DIESEL

FOR : 1PIA - B0FBM : DV6C TURBO DIESEL

FOR : 1CMJ - B0FBM : DV6C TURBO DIESEL

FOR : 1PMJ - B0FBM : DV6C TURBO DIESEL

Engine ECU CONTINENTAL SID 807 branch 2	
Fault code	P2033
After sales description of the fault code	Particle emission filter upstream temperature measurement : Short circuit to positive
Description of the diagnostics	Electrical fault. Voltage higher than 4,7 V for 300 ms
Conditions of activation of the diagnostics	Engine running
Conditions of disappearance of the fault	Driving for 5 minutes
Down-grade modes if fault present	Deactivation of the request for regeneration of the particle filter from the diagnostic tool
	Switching to fuel "normal reduced flow" mode
Switching on of the warning lamp and/or warning message	Warning lamp MIL
	"SERVICE" warning lamp
Main customer	

complaints likely	-
Suspect areas	Particle filter upstream temperature sensor
	Electrical harness
	Connectors

Fault code(s): P2031 or P2032 or P2033

Reminder DTC

Do not fill in this section for the FLOW CHART phase

DTC no.	Alfanulate text of the DTC	Code type	Conditions for fault finding	Downgraded mode after a fault is memorised	Driver warning light	Suspected areas Major control loops	The client «The(s)symptom(s) associated with the DTC»	Fault code(s) to be dealt with before working through this flow chart	Tools required
P2031	Temperature sensor upstream of particle filter: Plausibility at start up	SH							
P2032	Temperature sensor upstream of particle filter: Short-circuit to ground: Temperature too high	SC							
P2033	Temperature sensor upstream of particle filter: Short-circuit to positive: Temperature too low	SH							

PRE-CHECK

FLOW CHART Test procedure

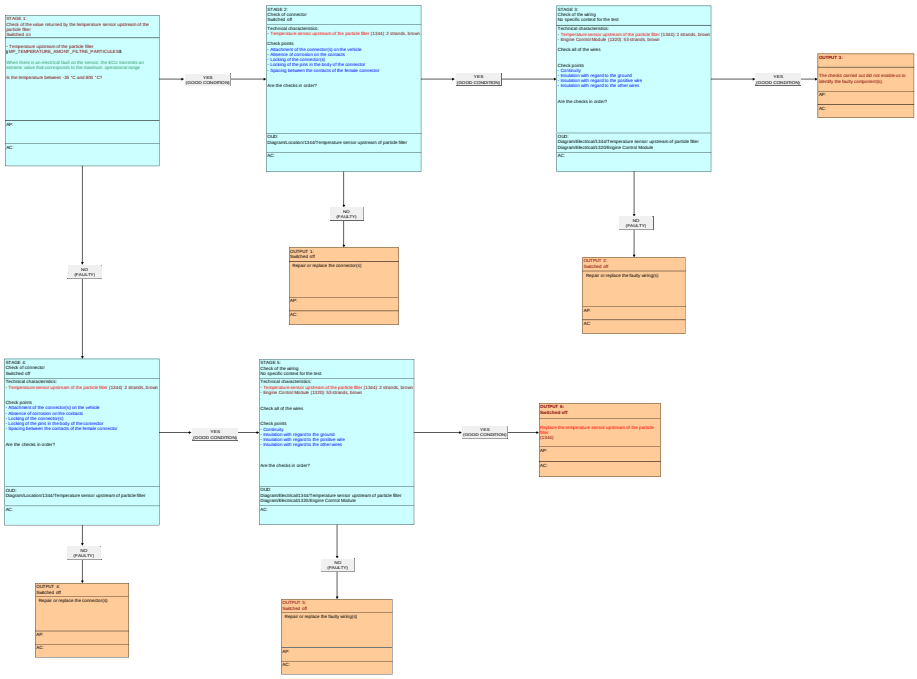

INFORMATION : FAULT CODE P2101 (ENGINE ECU)

SPECIAL FEATURE :

FOR : 1CB7 - B0FBM : DV6C TURBO DIESEL

FOR : 1CB8 - B0FBM : DV6C TURBO DIESEL

FOR : 1CXA - B0FBM : DV6C TURBO DIESEL

FOR : 1CX7 - B0FBM : DV6C TURBO DIESEL

FOR : 1CYA - B0FBM : DV6C TURBO DIESEL

FOR : 1C58 - B0FBM : DV6C TURBO DIESEL

FOR : 1PIA - B0FBM : DV6C TURBO DIESEL

FOR : 1PTB - B0FBM : DV6C TURBO DIESEL

FOR : 1PTC - B0FBM : DV6C TURBO DIESEL

FOR : 1PT7 - B0FBM : DV6C TURBO DIESEL

FOR : 1PW2 - B0FBM : DV6C TURBO DIESEL

FOR : 1CMJ - B0FBM : DV6C TURBO DIESEL

FOR : 1PMJ - B0FBM : DV6C TURBO DIESEL

Engine ECU CONTINENTAL SID 807 branch 2	
Fault code	P2101
After sales description of the fault code	Control of the air mixer : Overheating or excess current
Description of the diagnostics	Opening of the air mixer different from the reference value detected by a measurement of the control current higher than 4 A for 200 ms
Conditions of activation of the diagnostics	Engine running
Conditions of disappearance of the fault	Driving for 5 minutes
Down-grade modes if fault present	Deactivation of the request for regeneration of the particle filter from the diagnostic tool
Switching on of the warning lamp and/or warning	Warning lamp MIL

message	
Main customer complaints likely	Engine stop downgraded
	Noise
	No automatic stopping of the internal combustion engine (If the vehicle has the Stop and Start system)
	Problem with automatic restarting of the internal combustion engine (If the vehicle has the Stop and Start system)
Suspect areas	Air metering valve
	Electrical harness
	Connectors

Fault code(s): P2101 or P2102

Reminder DTC

Do not sti ...ults excepts for the FLOW CHART phase

DTC no.	Alternative text of the DTC	Fail type	Conditions for fault finding	Deregulated mode after a fault is memorized	Engine stop or limp home	Suspected areas Major control steps	The client office(s)/garage(s) associated with the DTCs	Fault code(s) to be dealt with before working through this flow chart	Tools required
P2101	Choke/butterfly valve control: Overlocked or inaccurate	342							
P2102	Choke/butterfly valve control: Short-circuit to ground	343							

PRE-CHECK

FLOW CHART Test procedure

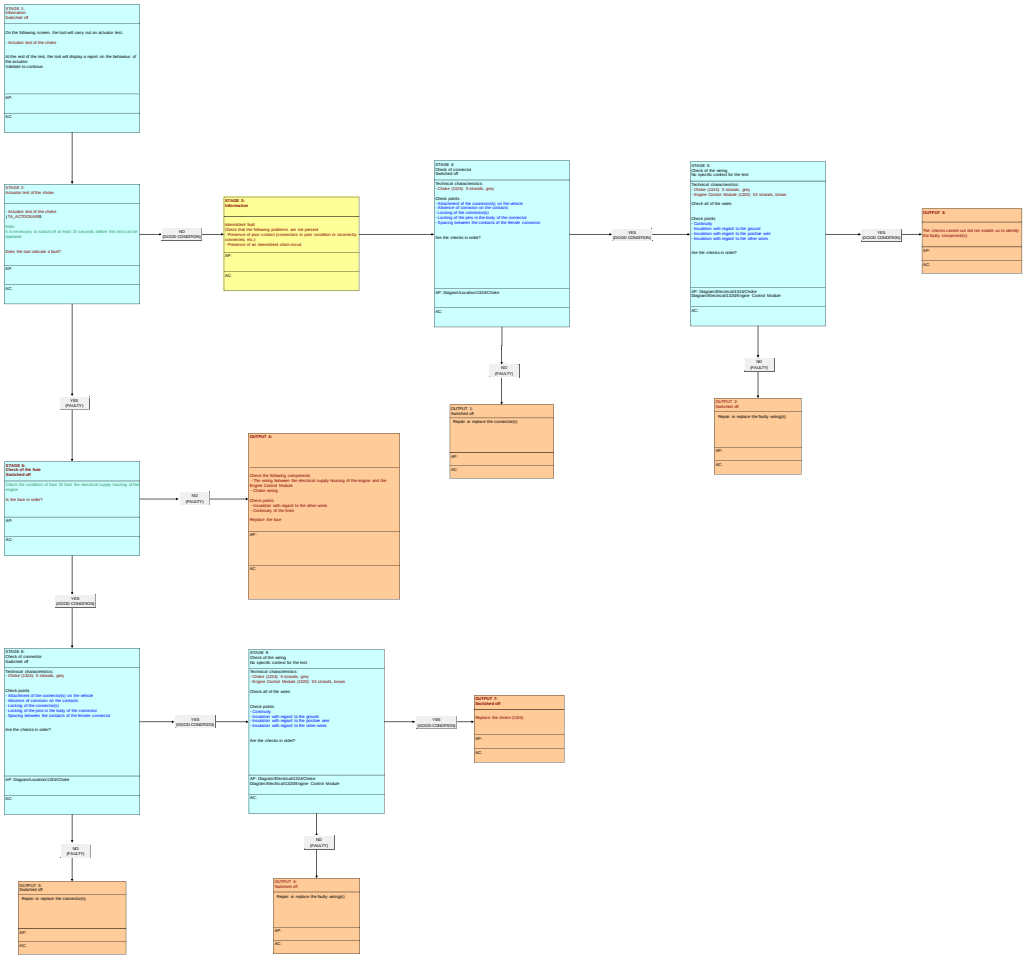

INFORMATION : FAULT CODE P2102 (ENGINE ECU)

SPECIAL FEATURE :

FOR : 1CB7 - B0FBM : DV6C TURBO DIESEL

FOR : 1CB8 - B0FBM : DV6C TURBO DIESEL

FOR : 1CXA - B0FBM : DV6C TURBO DIESEL

FOR : 1CX7 - B0FBM : DV6C TURBO DIESEL

FOR : 1CYA - B0FBM : DV6C TURBO DIESEL

FOR : 1C58 - B0FBM : DV6C TURBO DIESEL

FOR : 1PIA - B0FBM : DV6C TURBO DIESEL

FOR : 1PTB - B0FBM : DV6C TURBO DIESEL

FOR : 1PTC - B0FBM : DV6C TURBO DIESEL

FOR : 1PT7 - B0FBM : DV6C TURBO DIESEL

FOR : 1PW2 - B0FBM : DV6C TURBO DIESEL

FOR : 1PMJ - B0FBM : DV6C TURBO DIESEL

FOR : 1CMJ - B0FBM : DV6C TURBO DIESEL

Engine ECU CONTINENTAL SID 807 branch 2	
Fault code	P2102
After sales description of the fault code	Control of the air mixer : Electrical fault
Description of the diagnostics	Electrical fault detected for 200 ms
Conditions of activation of the diagnostics	Engine running
Conditions of disappearance of the fault	Driving for 5 minutes
Down-grade modes if fault present	Deactivation of the request for regeneration of the particle filter from the diagnostic tool
Switching on of the warning lamp and/or warning message	Warning lamp MIL

Main customer complaints likely	Engine stop downgraded
	Noise
	Absence of automatic stopping of the internal combustion engine (Vehicle equipped with "stop and start")
	Problem with automatic restarting of the internal combustion engine (Vehicle equipped with "stop and start")
Suspect areas	Air mixer
	Electrical harness
	Connectors

Fault code(s): P2101 or P2102

Reminder DTC

DTC no.	Alternative text of the DTC	Fail type	Conditions for fault finding	Downgraded mode after a fault is memorized	Do not sit in this section for the FLOW CHART phase: Engine Stall Risk	Suspected areas Major control steps	The client office(s)/garage(s) associated with the DTC's	Fault code(s) to be dealt with before working through this flow chart	Tools required
P2101	Choke/butterfly valve control: Overlocked or inaccurate	0x2							
P2102	Choke/butterfly valve control: Short-circuit to ground	0x2							

PRE-CHECK

FLOW CHART Test procedure

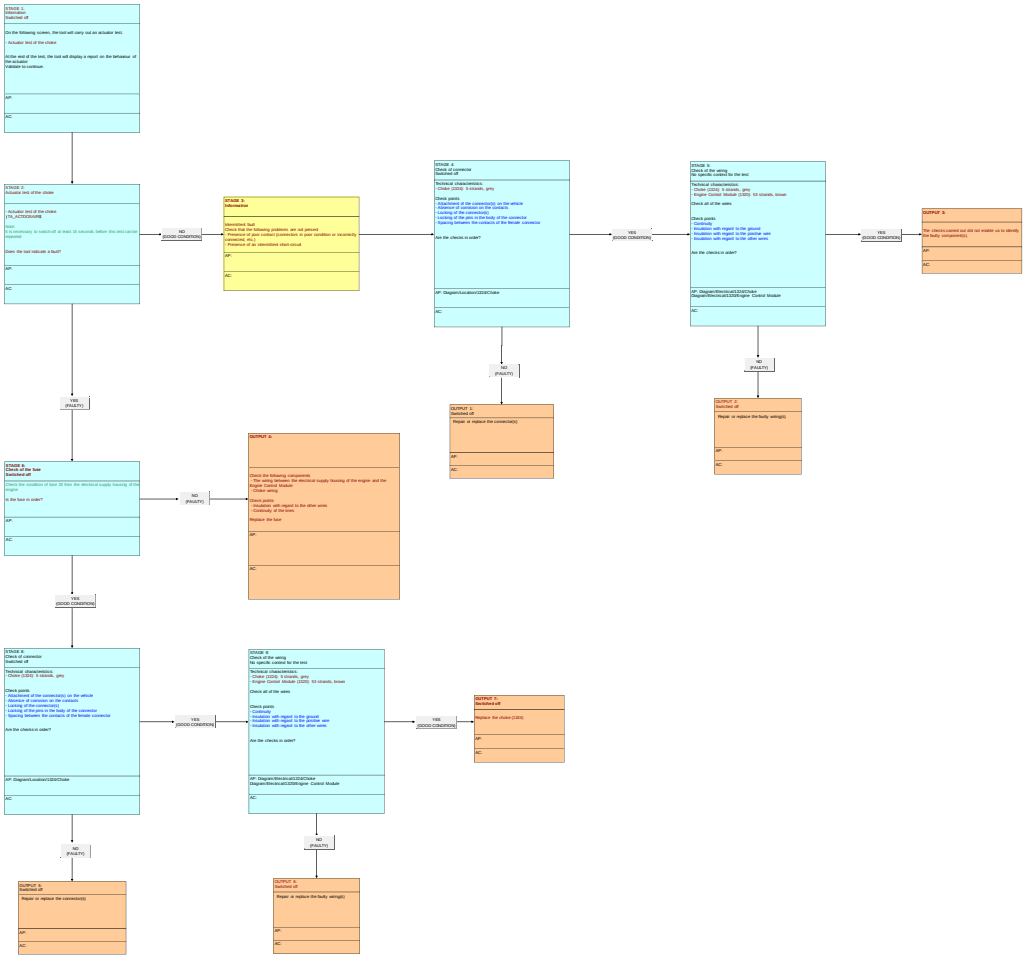

INFORMATION : FAULT CODE P2127 (ENGINE ECU)

SPECIAL FEATURE :

FOR : 1CB7 - B0FBM : DV6C TURBO DIESEL

FOR : 1CB8 - B0FBM : DV6C TURBO DIESEL

FOR : 1CXA - B0FBM : DV6C TURBO DIESEL

FOR : 1CX7 - B0FBM : DV6C TURBO DIESEL

FOR : 1CYA - B0FBM : DV6C TURBO DIESEL

FOR : 1C58 - B0FBM : DV6C TURBO DIESEL

FOR : 1PIA - B0FBM : DV6C TURBO DIESEL

FOR : 1PTB - B0FBM : DV6C TURBO DIESEL

FOR : 1PTC - B0FBM : DV6C TURBO DIESEL

FOR : 1PT7 - B0FBM : DV6C TURBO DIESEL

FOR : 1PW2 - B0FBM : DV6C TURBO DIESEL

FOR : 1CMJ - B0FBM : DV6C TURBO DIESEL

FOR : 1PMJ - B0FBM : DV6C TURBO DIESEL

Engine ECU CONTINENTAL SID 807 branch 2	
Fault code	P2127
After sales description of the fault code	Measurement of the air mixer position : Short circuit to earth
Description of the diagnostics	Electrical fault. Voltage less than 0,2 V for 500 ms
Conditions of activation of the diagnostics	Ignition switched on
Conditions of disappearance of the fault	Driving for 5 minutes
Down-grade modes if fault present	Closing of the EGR (exhaust gas recycling) valve
	Reversible deactivation of the vehicle speed limiter
	Reversible deactivation of the vehicle cruise control
	Switching of the turbocharging pressure regulation to controlled mode
	Deactivation of the request for regeneration of the particle filter from the diagnostic tool

	Deactivation of the "easy-move" (electric parking brake) functionality
	For a gearbox with engine speed regulation (automatic gearbox or piloted manual gearbox), limitation of the torque sent to the gearbox
Switching on of the warning lamp and/or warning message	Warning lamp MIL
Main customer complaints likely	Engine stop downgraded
	Noise
	Absence of automatic stopping of the internal combustion engine (Vehicle equipped with "stop and start")
	Problem with automatic restarting of the internal combustion engine (Vehicle equipped with "stop and start")
Suspect areas	Air metering valve
	Electrical harness
	Connectors

Fault code(s): P2127 or P2128

Reminder DTC

Do not fill in this section for the FLOW CHART phase

DTC no.	Aftersales text of the DTC	Fuse type	Conditions for fault finding	Downgraded mode after a fault is memorised	Driving warning light	Suspected areas Major control loops	The client effect(s)/symptom(s) associated with the DTC(s)	Fault code(s) to be dealt with before working through this flow chart	Tools required
P2127	Choke/butterfly valve position sensor: Short-circuit to ground	10							
P2128	Choke/butterfly valve position sensor: Short-circuit to positive or open circuit	10							

PRE-CHECK

FLOW CHART Test procedure

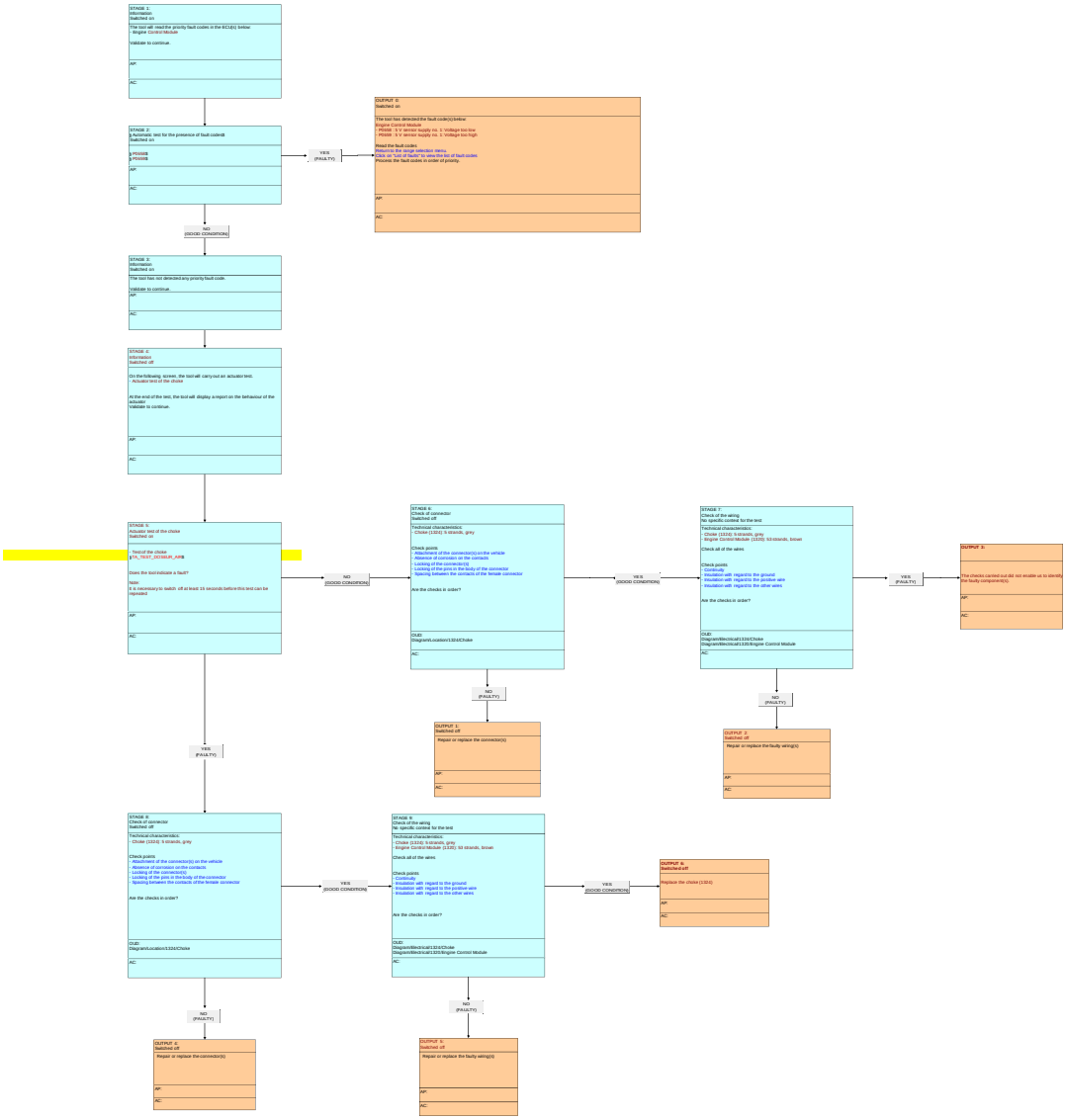

INFORMATION : FAULT CODE P2128 (ENGINE ECU)

SPECIAL FEATURE :

FOR : 1CB7 - B0FBM : DV6C TURBO DIESEL

FOR : 1CB8 - B0FBM : DV6C TURBO DIESEL

FOR : 1CXA - B0FBM : DV6C TURBO DIESEL

FOR : 1CX7 - B0FBM : DV6C TURBO DIESEL

FOR : 1CYA - B0FBM : DV6C TURBO DIESEL

FOR : 1C58 - B0FBM : DV6C TURBO DIESEL

FOR : 1PIA - B0FBM : DV6C TURBO DIESEL

FOR : 1PTB - B0FBM : DV6C TURBO DIESEL

FOR : 1PTC - B0FBM : DV6C TURBO DIESEL

FOR : 1PT7 - B0FBM : DV6C TURBO DIESEL

FOR : 1PW2 - B0FBM : DV6C TURBO DIESEL

FOR : 1CMJ - B0FBM : DV6C TURBO DIESEL

FOR : 1PMJ - B0FBM : DV6C TURBO DIESEL

Engine ECU CONTINENTAL SID 807 branch 2	
Fault code	P2128
After sales description of the fault code	Measurement of the air mixer position : Short circuit to positive or open circuit
Description of the diagnostics	Voltage higher than 4,9 V for 500 ms
Conditions of activation of the diagnostics	Ignition switched on
Conditions of disappearance of the fault	Driving for 5 minutes
Down-grade modes if fault present	Closing of the EGR (exhaust gas recycling) valve
	Reversible deactivation of the vehicle speed limiter
	Reversible deactivation of the vehicle cruise control
	Switching of the turbocharging pressure regulation to controlled mode
	Deactivation of the request for regeneration of the particle filter from the diagnostic tool

	Deactivation of the "easy-move" (electric parking brake) functionality
	For a gearbox with engine speed regulation (automatic gearbox or piloted manual gearbox), limitation of the torque sent to the gearbox
Switching on of the warning lamp and/or warning message	Warning lamp MIL
Main customer complaints likely	Engine stop downgraded
	Absence of automatic stopping of the internal combustion engine (Vehicle equipped with "stop and start")
	Problem with automatic restarting of the internal combustion engine (Vehicle equipped with "stop and start")
	Noise
Suspect areas	Air metering valve
	Electrical harness
	Connectors

Fault code(s): P2127 or P2128

Reminder DTC

Do not fill in this section for the FLOW CHART phase

DTC no.	Aftersales text of the DTC	Fuse & Relay	Conditions for fault finding	Downgraded mode after a fault is memorised	Driving warning light	Suspected areas Major control loops	The client effect(s)/symptom(s) associated with the DTC(s)	Fault code(s) to be dealt with before working through this flow chart	Tools required
P2127	Choke/butterfly valve position sensor: Short-circuit to ground	no							
P2128	Choke/butterfly valve position sensor: Short-circuit to positive or open circuit	no							

PRE-CHECK

FLOW CHART Test procedure

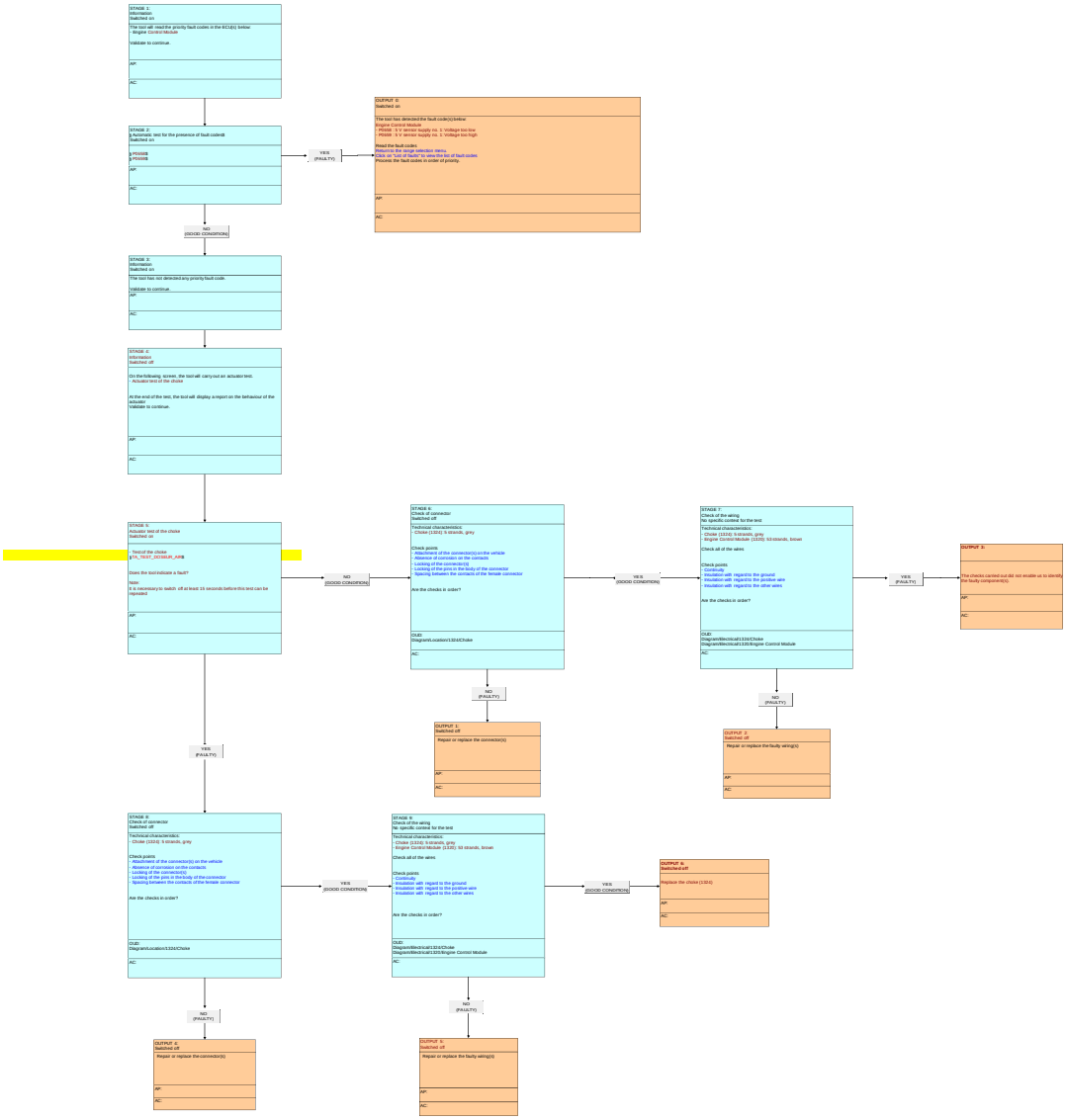

INFORMATION : FAULT CODE P2137 (ENGINE ECU)

SPECIAL FEATURE :

FOR : 1CB7 - B0FBM : DV6C TURBO DIESEL

FOR : 1CX7 - B0FBM : DV6C TURBO DIESEL

FOR : 1C58 - B0FBM : DV6C TURBO DIESEL

FOR : 1PT7 - B0FBM : DV6C TURBO DIESEL

FOR : 1PW2 - B0FBM : DV6C TURBO DIESEL

FOR : 1CB8 - B0FBM : DV6C TURBO DIESEL

FOR : 1CXA - B0FBM : DV6C TURBO DIESEL

FOR : 1CYA - B0FBM : DV6C TURBO DIESEL

FOR : 1PTB - B0FBM : DV6C TURBO DIESEL

FOR : 1PTC - B0FBM : DV6C TURBO DIESEL

FOR : 1PIA - B0FBM : DV6C TURBO DIESEL

FOR : 1CMJ - B0FBM : DV6C TURBO DIESEL

FOR : 1PMJ - B0FBM : DV6C TURBO DIESEL

Engine ECU CONTINENTAL SID 807 branch 2	
Fault code	P2137
After sales description of the fault code	Measurement of the accelerator pedal position : Incoherence of the accelerator pedal tracks
Description of the diagnostics	Lack of coherence between the signals of the 2 tracks of the accelerator pedal detected for 140 ms
Conditions of activation of the diagnostics	engine running
Conditions of disappearance of the fault	Driving for 5 minutes
Down-grade modes if fault present	Irreversible deactivation of the vehicle speed limiter
	Irreversible deactivation of the vehicle cruise control
	Deactivation of taking account of the tight spot information
	Switching of the turbocharging pressure regulation to controlled mode
	Application of the mode "voluntary downgrade of

	performance"
	Deactivation of the "easy-move" (electric parking brake) functionality
	Function for limitation of the static torque for the protection of the gearbox
Switching on of the warning lamp and/or warning message	"SERVICE" warning lamp
Main customer complaints likely	Lack of power
	Absence of automatic stopping of the internal combustion engine (Vehicle equipped with "stop and start")
Suspect areas	Foot throttle pedal
	Electrical harness
	Connectors

Fault code(s): P0222 or P0223 or P0227 or P0228 or P2137

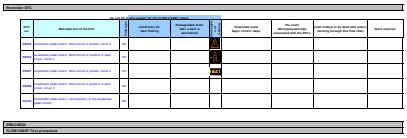

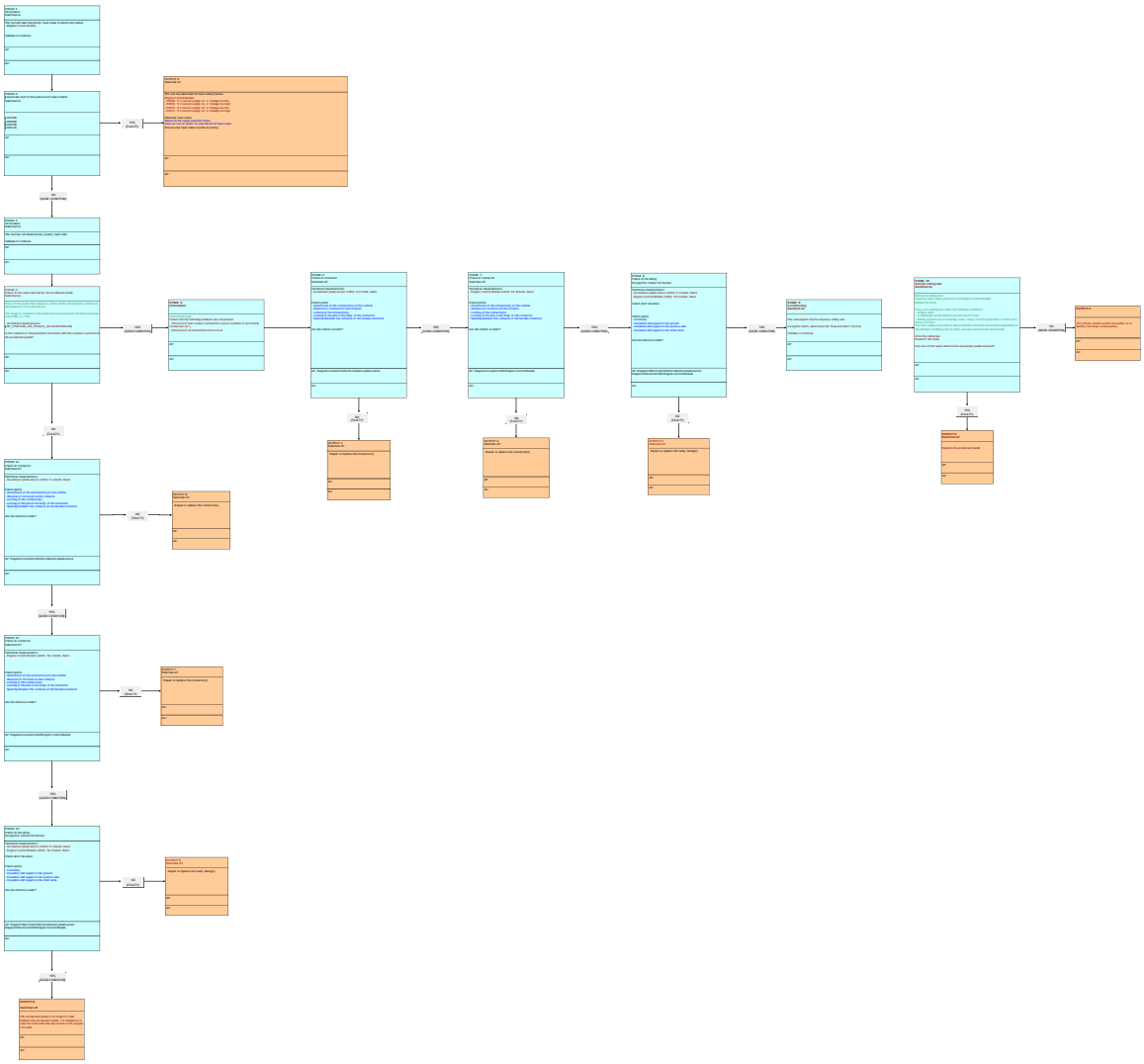

INFORMATION : FAULT CODE P2144 (ENGINE ECU)

SPECIAL FEATURE :

FOR : 1CB7 - B0FBM : DV6C TURBO DIESEL

FOR : 1CX7 - B0FBM : DV6C TURBO DIESEL

FOR : 1C58 - B0FBM : DV6C TURBO DIESEL

FOR : 1PT7 - B0FBM : DV6C TURBO DIESEL

FOR : 1PW2 - B0FBM : DV6C TURBO DIESEL

FOR : 1CB8 - B0FBM : DV6C TURBO DIESEL

FOR : 1CXA - B0FBM : DV6C TURBO DIESEL

FOR : 1CYA - B0FBM : DV6C TURBO DIESEL

FOR : 1PTB - B0FBM : DV6C TURBO DIESEL

FOR : 1PTC - B0FBM : DV6C TURBO DIESEL

FOR : 1PIA - B0FBM : DV6C TURBO DIESEL

FOR : 1CMJ - B0FBM : DV6C TURBO DIESEL

FOR : 1PMJ - B0FBM : DV6C TURBO DIESEL

Engine ECU CONTINENTAL SID 807 branch 2	
Fault code	P2144
After sales description of the fault code	Control of the EGR valve : Electrical fault
Description of the diagnostics	Electrical fault detected for 200 ms
Conditions of activation of the diagnostics	Engine running
Conditions of disappearance of the fault	Driving for 5 minutes remaining under an engine speed of 2500 rpm at half load
Down-grade modes if fault present	Closing of the EGR (exhaust gas recycling) valve
	Switching of the turbocharging pressure regulation to controlled mode
	Deactivation of the request for regeneration of the particle filter from the diagnostic tool
Switching on of the warning lamp and/or	Warning lamp MIL

warning message	
Main customer complaints likely	Noise
Suspect areas	Exhaust gas recycling valve
	Electrical harness
	Connectors

Fault code(s): P2144 or P2413

Reminder DTC

Do not fill in this section for the FLOW CHART phase

DTC no.	Alternative text of the DTC	Fault type	Conditions for fault finding	Downgraded mode after a fault is ascertained	Malfunction Indicator Lamp (MIL)	Suspected areas Major control steps	The check effect(s)/symptom(s) associated with the DTCs	Fault code(s) to be dealt with before working through this flow chart	Tools required
P2144	Control of EGR valve 1: Short-circuit to ground	0X							
P2413	Control of EGR valve 1: Overcurrent on the valve control in the ECU	0X							

PRE-CHECK

FLOW CHART Test procedure

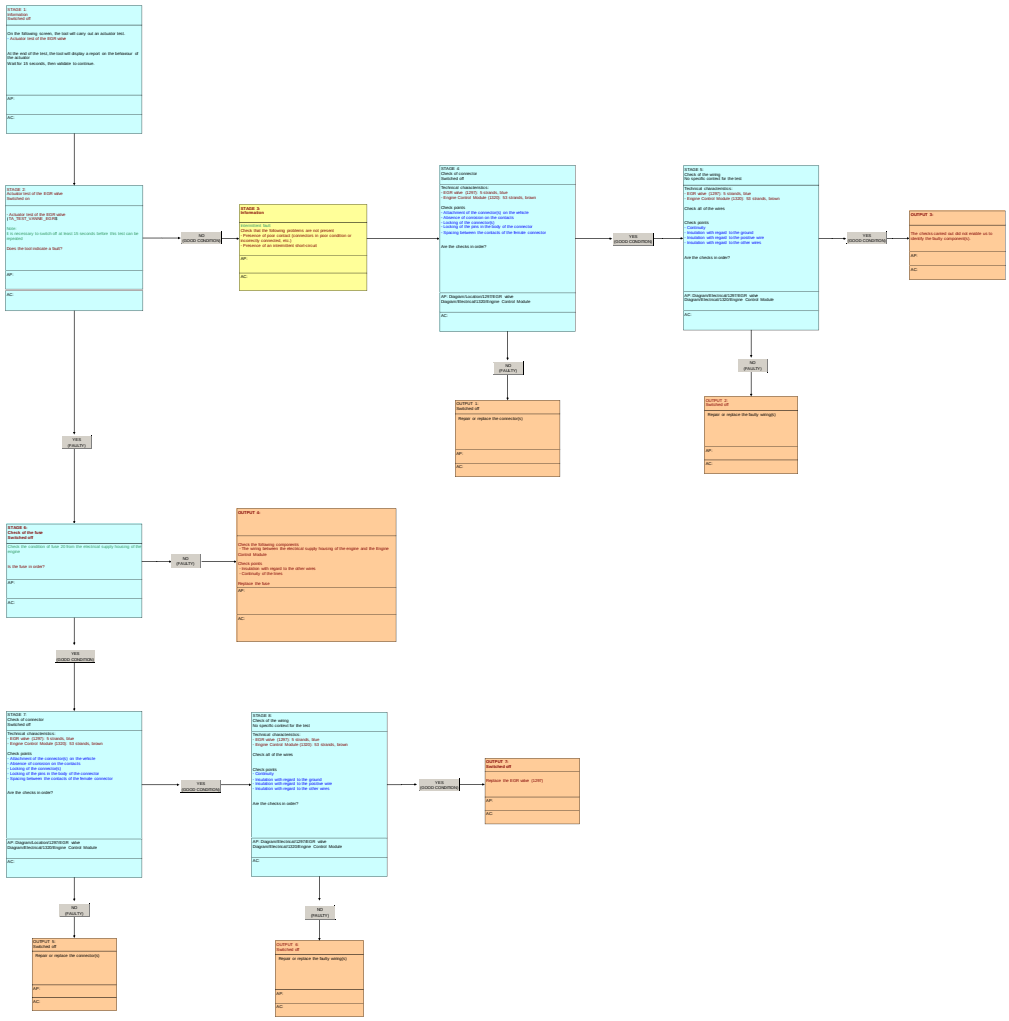

INFORMATION : FAULT CODE P2146 (ENGINE ECU)

SPECIAL FEATURE :

FOR : 1CMJ - B0FBM : DV6C TURBO DIESEL

FOR : 1PMJ - B0FBM : DV6C TURBO DIESEL

Engine ECU CONTINENTAL SID 807 branch 2	
Fault code	P2146
After sales description of the fault code	Control of injectors : Injection bank 1 : Short circuit
Description of the diagnostics	Engine management ECU internal fault detected for 400 ms
Conditions of activation of the diagnostics	At least one of the following conditions must be fulfilled - Ignition switched on - Engine running
Conditions of disappearance of the fault	Driving for 5 minutes
Down-grade modes if fault present	Closing of the EGR (exhaust gas recycling) valve
	Irreversible deactivation of the vehicle speed limiter
	Irreversible deactivation of the vehicle cruise control
	Deactivation of taking account of the tight spot information
	Switching of the turbocharging pressure regulation to controlled mode
	Cutting of fuel injector 1
	Cutting of fuel injector 2
	Cutting of fuel injector 3
	Cutting of fuel injector 4
	Switching to fuel "normal reduced flow" mode
	Closing of the fuel flow regulation valve
	Deactivation of the "easy-move" (electric parking brake) functionality
	Function for limitation of the static torque for the protection of the gearbox
Switching on of the warning lamp and/or warning message	Warning lamp MIL
Main customer complaints likely	Jerking/stalling
	Noise
	Smoke from the exhaust
	Starting problem
	Lack of power
	Absence of automatic stopping of the internal combustion engine (Vehicle equipped with "stop and

	start")
Suspect areas	Engine ECU
	Fuel injectors

Fault code(s): P0201 or P0202 or P0203 or P0204 or P0262 or P0265 or P0268 or P0271 or P062D or P1641 or P2146 or P2148

Reminder DTC

Do not fill in this section for the FLOW CHART phase

DTC no.	Alternate text of the DTC	Priority	Conditions for fault finding	Downgraded mode after a fault is ascertained	Illumination of warning light	Suspected areas Major control steps	The client effects(symptomatic) associated with the DTCs	Fault code(s) to be dealt with before working through this flow chart	Tools required
P0201	Control of injector 1: Open circuit on the circuit (wiring, injector, ECU)	A							
P0202	Control of injector 2: Open circuit on the circuit (wiring, injector, ECU)	A							
P0203	Control of injector 3: Open circuit on the circuit (wiring, injector, ECU)	A							
P0204	Control of injector 4: Open circuit on the circuit (wiring, injector, ECU)	A							
P0262	Control of injector 1: Short-circuit to positive on the circuit (wiring, injector, ECU)	A							
P0265	Control of injector 2: Short-circuit to positive on the circuit (wiring, injector, ECU)	A							
P0268	Control of injector 3: Short-circuit to positive on the circuit (wiring, injector, ECU)	A							
P0271	Control of injector 4: Short-circuit to positive on the circuit (wiring, injector, ECU)	A							
P062D	ECU voltage converter for control of the injectors faulty on bank 1	A							
P1641	ECU initialisation malfunction of the injector bank or wiring fault	A							
P2146	Injector control: injection bank 1: short-circuit	A							
P2148	Injector control: injection bank 1: voltage too high	A							

PRE-CHECK

FLOW CHART Test procedure

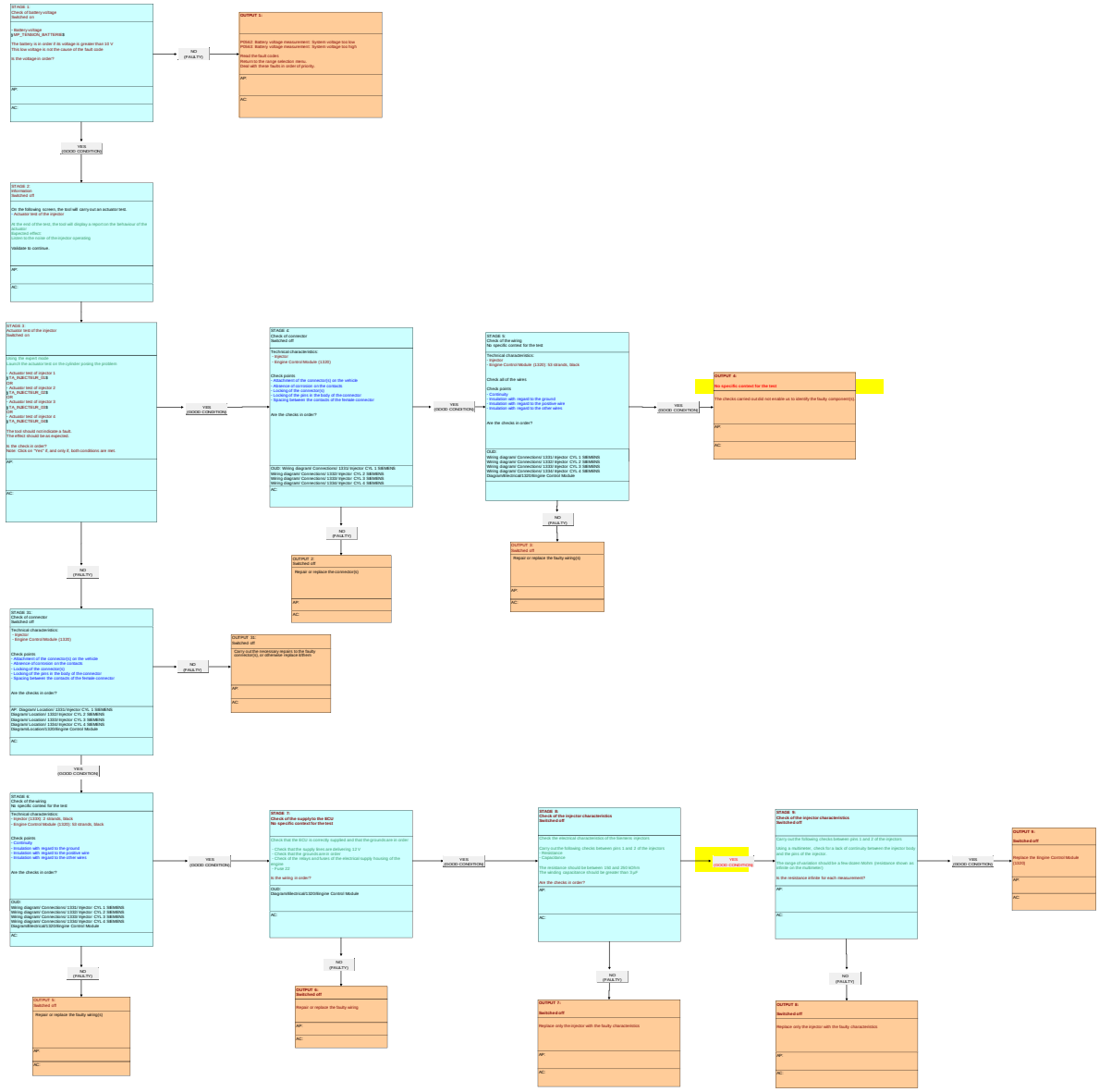

INFORMATION : FAULT CODE P2148 (ENGINE ECU)

SPECIAL FEATURE :

FOR : 1CB7 - B0FBM : DV6C TURBO DIESEL

FOR : 1CX7 - B0FBM : DV6C TURBO DIESEL

FOR : 1C58 - B0FBM : DV6C TURBO DIESEL

FOR : 1PT7 - B0FBM : DV6C TURBO DIESEL

FOR : 1PW2 - B0FBM : DV6C TURBO DIESEL

FOR : 1CB8 - B0FBM : DV6C TURBO DIESEL

FOR : 1CXA - B0FBM : DV6C TURBO DIESEL

FOR : 1CYA - B0FBM : DV6C TURBO DIESEL

FOR : 1PTB - B0FBM : DV6C TURBO DIESEL

FOR : 1PTC - B0FBM : DV6C TURBO DIESEL

FOR : 1PIA - B0FBM : DV6C TURBO DIESEL

FOR : 1CMJ - B0FBM : DV6C TURBO DIESEL

FOR : 1PMJ - B0FBM : DV6C TURBO DIESEL

Engine ECU CONTINENTAL SID 807 branch 2	
Fault code	P2148
After sales description of the fault code	Injectors control : Injection bank 1 : Voltage too high
Description of the diagnostics	Engine management ECU internal fault detected for 400 ms
Conditions of activation of the diagnostics	Engine running
Conditions of disappearance of the fault	Driving for 5 minutes
Down-grade modes if fault present	-
Switching on of the warning lamp and/or warning message	Warning lamp MIL

Main customer complaints likely	Jerking/stalling
	Noise
	Smoke from the exhaust
	Starting problem
	Lack of power
	Absence of automatic stopping of the internal combustion engine (Vehicle equipped with "stop and start")
Suspect areas	Engine ECU

Fault code(s): P0201 or P0202 or P0203 or P0204 or P0262 or P0265 or P0268 or P0271 or P062D or P1641 or P2146 or P2148

Reminder DTC

Do not fill in this section for the FLOW CHART phase

DTC no.	Alternative text of the DTC	Priority	Conditions for fault finding	Downgraded mode after a fault is ascertained	Illuminated warning light	Suspected areas Major control steps	The client effects(phenomenon) associated with the DTCs	Fault code(s) to be dealt with before working through this flow chart	Tools required
P0201	Control of injector 1: Open circuit on the circuit (wiring, injector, ECU)	A							
P0202	Control of injector 2: Open circuit on the circuit (wiring, injector, ECU)	A							
P0203	Control of injector 3: Open circuit on the circuit (wiring, injector, ECU)	A							
P0204	Control of injector 4: Open circuit on the circuit (wiring, injector, ECU)	A							
P0262	Control of injector 1: Short-circuit to positive on the circuit (wiring, injector, ECU)	A							
P0265	Control of injector 2: Short-circuit to positive on the circuit (wiring, injector, ECU)	A							
P0268	Control of injector 3: Short-circuit to positive on the circuit (wiring, injector, ECU)	A							
P0271	Control of injector 4: Short-circuit to positive on the circuit (wiring, injector, ECU)	A							
P062D	ECU voltage converter for control of the injectors faulty on bank 1	A							
P1641	ECU initialisation malfunction of the injector bank or wiring fault	A							
P2146	Injector control: injection bank 1: short-circuit	A							
P2148	Injector control: injection bank 1: voltage too high	A							

PRE-CHECK

FLOW CHART Test procedure

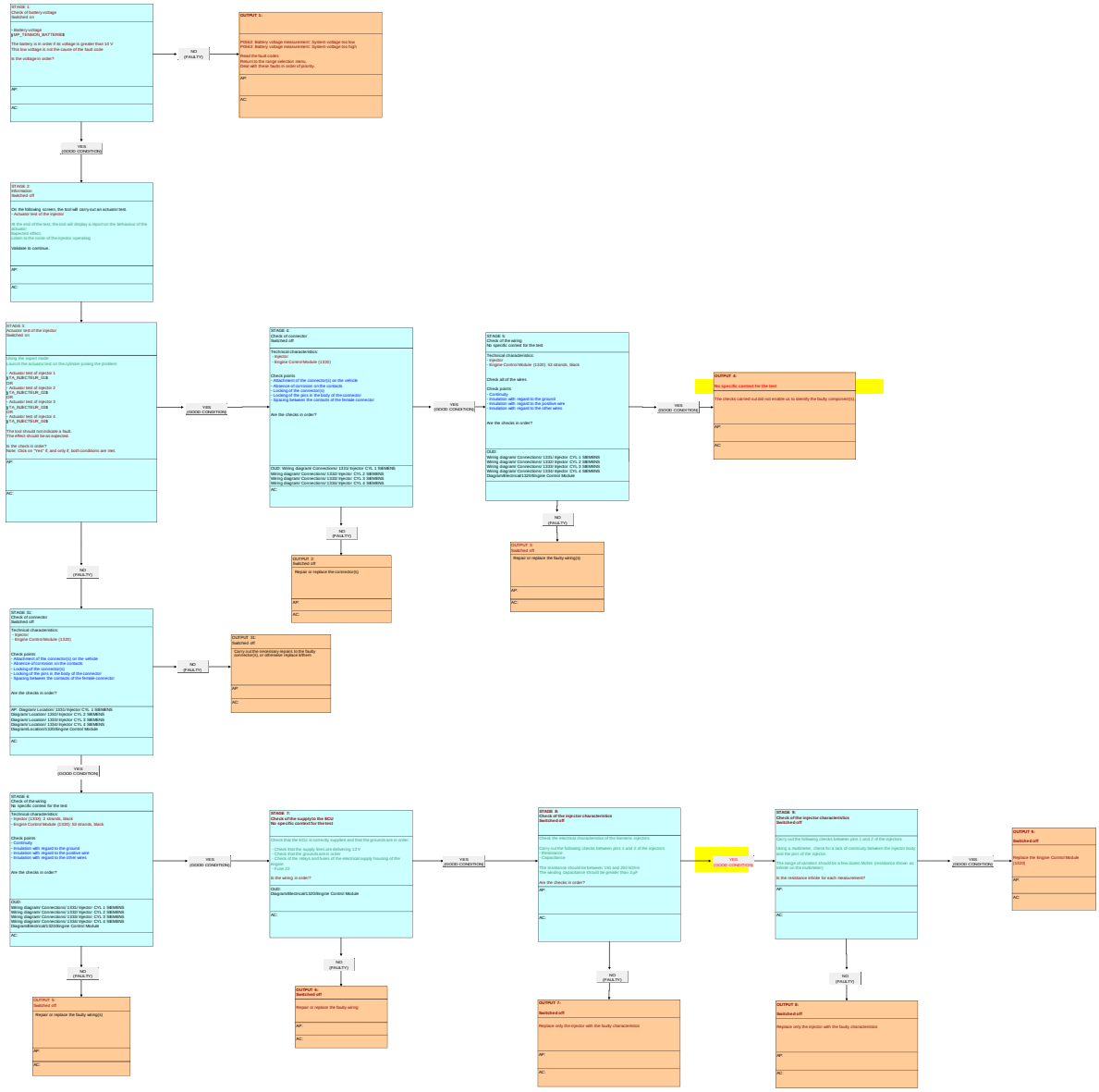

INFORMATION : FAULT CODE P2173 (ENGINE ECU)

SPECIAL FEATURE :

FOR : 1CMJ - B0FBM : DV6C TURBO DIESEL

FOR : 1PMJ - B0FBM : DV6C TURBO DIESEL

Engine ECU CONTINENTAL SID 807 branch 2	
Fault code	P2173
After sales description of the fault code	Air metering valve : Position incorrect (too open)
Description of the diagnostics	The position measured is greater than the reference by more than 50 % for 5 seconds
Conditions of activation of the diagnostics	Engine running
Conditions of disappearance of the fault	Driving for 5 minutes
Down-grade modes if fault present	Switching of the turbocharging pressure regulation to controlled mode
	Sending of the information "torque uncertain" on the CAN network
Switching on of the warning lamp and/or warning message	Warning lamp MIL
	"SERVICE" warning lamp
Main customer complaints likely	Engine stop downgraded
Suspect areas	Air metering valve
	Electrical harness
	Connectors

Fault code(s): P2173 or P2175 or P1498 or P1499

Reminder DTC

Do not fill in this section for the FLOW CHART phase

DTC no.	Aftersales text of the DTC	Fault type	Conditions for fault finding	Downgraded mode after a fault is memorised	Driver warning light	Suspected areas Major control loops	The client «The(s) symptom(s) associated with the DTC»	Fault code(s) to be dealt with before working through this flow chart	Tools required
P2173	Choke/butterfly valve incorrect position with regard to the setpoint (too open)	A							
P2175	Choke/butterfly valve incorrect position with regard to the setpoint (too closed)	A							
P1498	Choke/butterfly valve incorrect position with regard to the setpoint (too open) (alternate)	A							
P1499	Choke/butterfly valve incorrect position with regard to the setpoint (too closed) (alternate)	A							

PRE-CHECK
FLOW CHART Test procedure

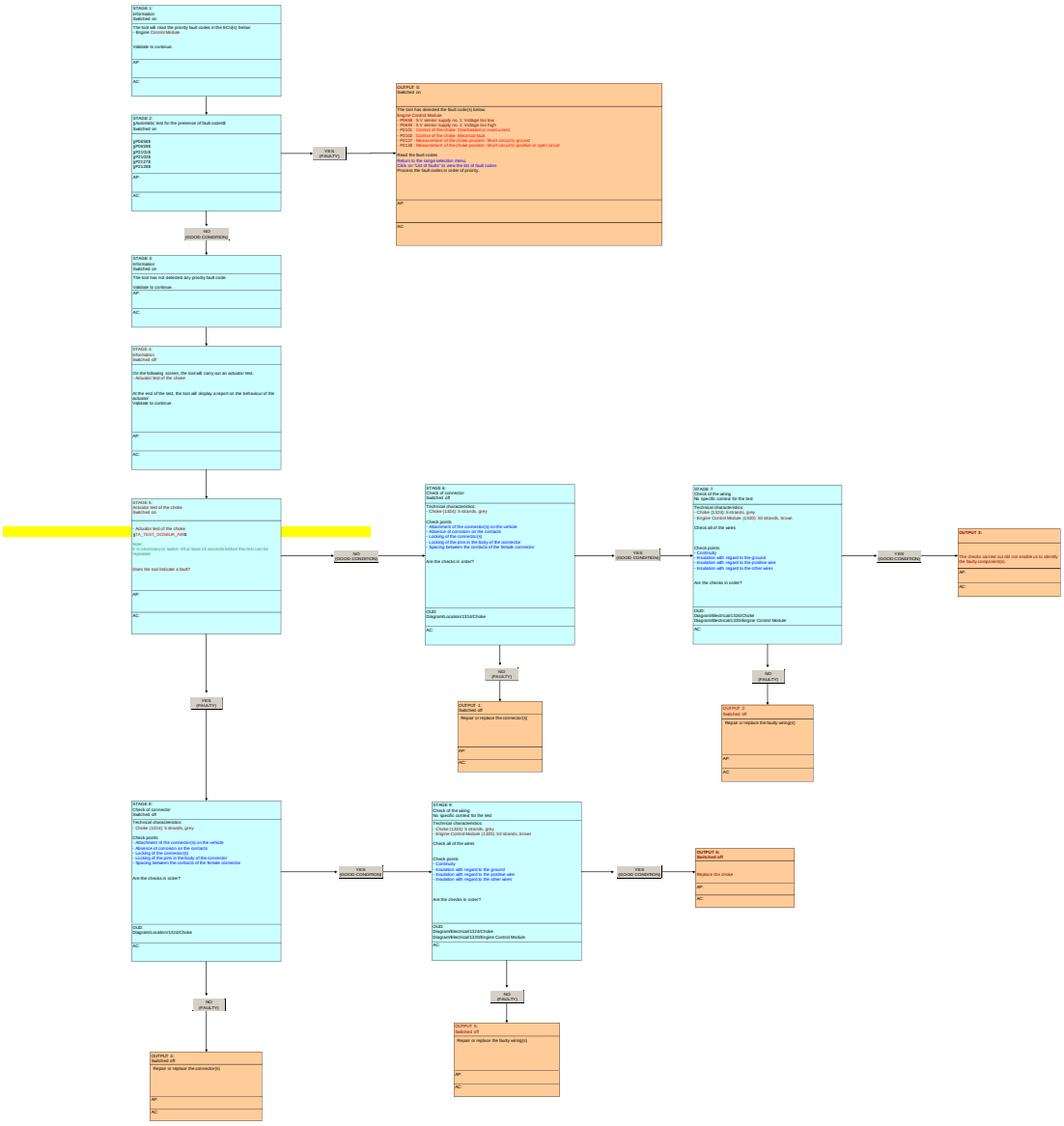

INFORMATION : FAULT CODE P2175 (ENGINE ECU)

SPECIAL FEATURE :

FOR : 1CMJ - B0FBM : DV6C TURBO DIESEL

FOR : 1PMJ - B0FBM : DV6C TURBO DIESEL

Engine ECU CONTINENTAL SID 807 branch 2	
Fault code	P2175
After sales description of the fault code	Air metering valve : Position incorrect (too closed)
Description of the diagnostics	The position measured is less than the reference by more than 50 % for 5 seconds
Conditions of activation of the diagnostics	Engine running
Conditions of disappearance of the fault	Driving for 5 minutes
Down-grade modes if fault present	Closing of the EGR (exhaust gas recycling) valve
	Switching of the turbocharging pressure regulation to controlled mode
	Sending of the information "torque uncertain" on the CAN network
Switching on of the warning lamp and/or warning message	Warning lamp MIL
	"SERVICE" warning lamp
Main customer complaints likely	Noise
	Smoke from the exhaust
	Slightly higher fuel consumption
	Jerking/stalling
	Lack of power
	Absence of automatic stopping of the internal combustion engine (Vehicle equipped with "stop and start")
Suspect areas	Air metering valve
	Electrical harness
	Connectors

Fault code(s): P2173 or P2175 or P1498 or P1499

Reminder DTC

Do not fill in this section for the FLOW CHART phase

DTC no.	Alternative text of the DTC	Fault type	Conditions for fault finding	Downgraded mode after a fault is memorised	Driver warning lamp	Suspected areas Major control loops	The client «The(s)symptom(s) associated with the DTC»	Fault code(s) to be dealt with before working through this flow chart	Tools required
P2173	Choke/butterfly valve incorrect position with regard to the setpoint (too open)	A							
P2175	Choke/butterfly valve incorrect position with regard to the setpoint (too closed)	A							
P1498	Choke/butterfly valve incorrect position with regard to the setpoint (too open) (alternate)	A							
P1499	Choke/butterfly valve incorrect position with regard to the setpoint (too closed) (alternate)	A							

PRE-CHECK
FLOW CHART Test procedure

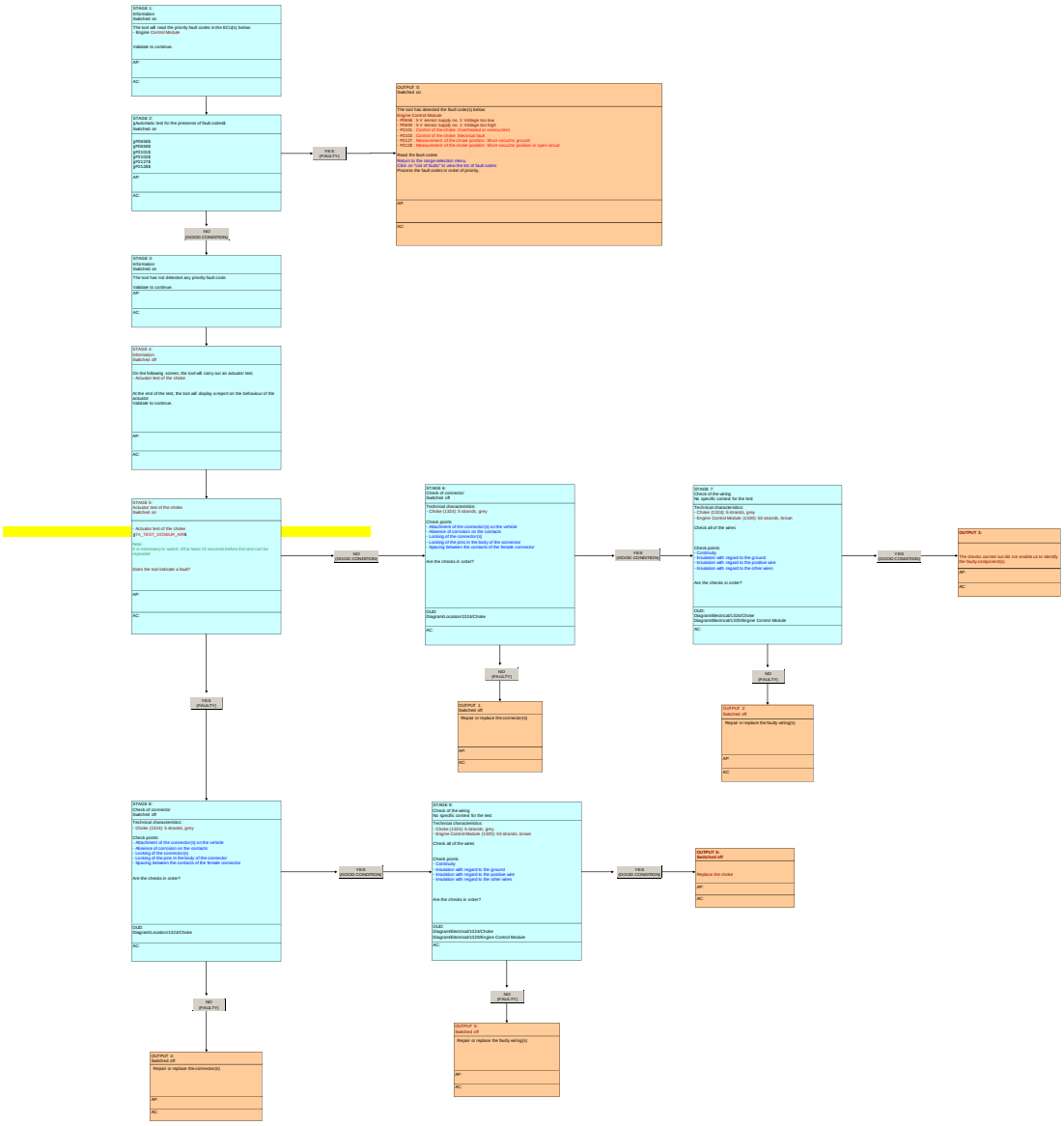

INFORMATION : FAULT CODE P2187 (ENGINE ECU)

SPECIAL FEATURE :

FOR : 1CB7 - B0FBM

FOR : 1CB8 - B0FBM

FOR : 1CXA - B0FBM

FOR : 1CX7 - B0FBM

FOR : 1CYA - B0FBM

FOR : 1C58 - B0FBM

FOR : 1PIA - B0FBM

FOR : 1PTB - B0FBM

FOR : 1PTC - B0FBM

FOR : 1PT7 - B0FBM

FOR : 1PW2 - B0FBM

FOR : 1CMJ - B0FBM

FOR : 1PMJ - B0FBM

Engine ECU CONTINENTAL SID 807 branch 2	
Fault code	P2187
After sales description of the fault code	Mixture of the system : Concentration of oxygen too high
Description of the diagnostics	Plausibility fault. Excessive oxygen concentration detected for 500 ms
Conditions of activation of the diagnostics	Engine running
Conditions of disappearance of the fault	Driving for 5 minutes
Down-grade modes if fault present	-
Switching on of the warning lamp and/or warning message	Engine diagnosis warning lamp
Main customer complaints likely	Slightly higher fuel consumption
Suspect areas	Oxygen sensor
	Electrical harness
	Connectors

Fault code(s): P2187 or P2188 or P2297

Reminder DTC

Do not do ECMs revision for the FLOW CHART phase

DTC no.	Alternative text of the DTC	Fault type	Conditions for fault finding	Downgraded mode after a fault is ascertained	Check Engine light (MIL)	Suspected areas Major control steps	The client effect(s) (symptom(s)) associated with the DTCs	Fault code(s) to be dealt with before working through this flow chart	Tests required
P2187	System richness: Too enough fuel when idling	A							
P2188	System richness: Too much fuel when idling	A							
P2297	Oxygen sensor: Oxygen communication not plausible with engine load	A							

PRE-CHECK

FLOW CHART Test procedure

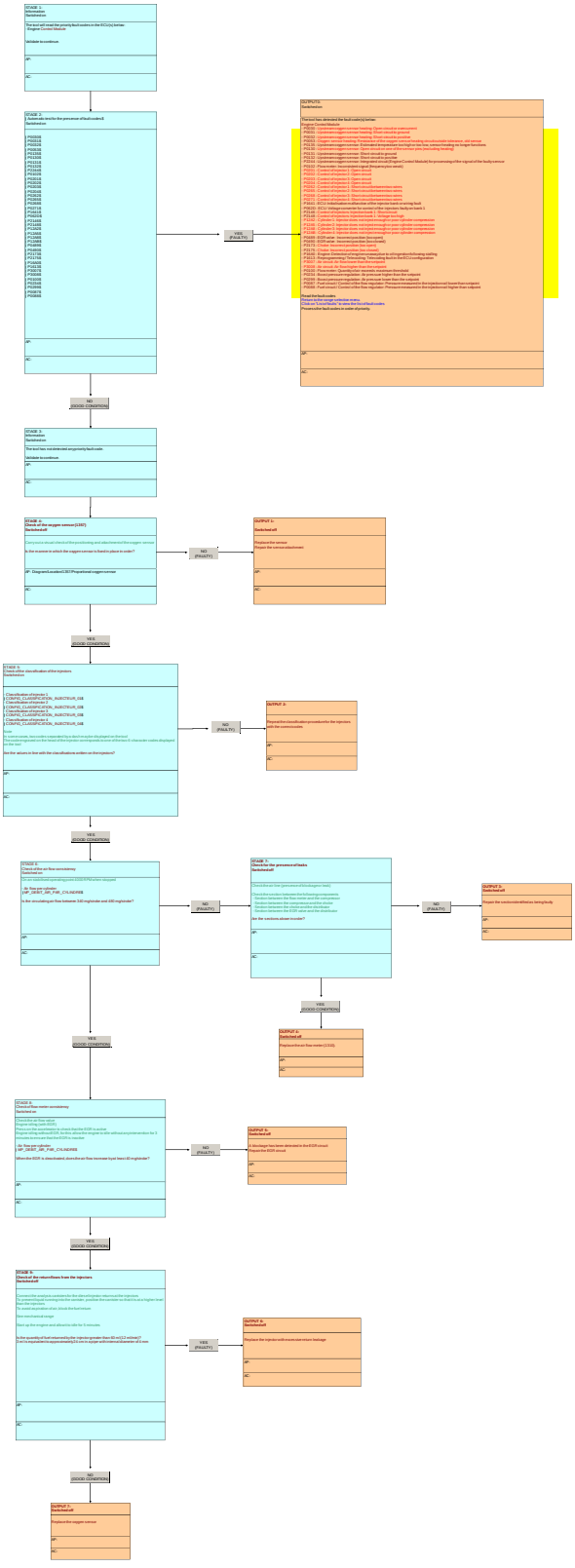

INFORMATION : FAULT CODE P2188 (ENGINE MANAGEMENT ECU)

SPECIAL FEATURE :

FOR : 1CB7 - B0FBM

FOR : 1CB8 - B0FBM

FOR : 1CXA - B0FBM

FOR : 1CX7 - B0FBM

FOR : 1CYA - B0FBM

FOR : 1C58 - B0FBM

FOR : 1PIA - B0FBM

FOR : 1PTB - B0FBM

FOR : 1PTC - B0FBM

FOR : 1PT7 - B0FBM

FOR : 1PW2 - B0FBM

FOR : 1CMJ - B0FBM

FOR : 1PMJ - B0FBM

Engine ECU CONTINENTAL SID 807 branch 2	
Fault code	P2188
After sales description of the fault code	Mixture of the system : Concentration of oxygen too low
Description of the diagnostics	Plausibility fault. Insufficient oxygen concentration detected for 500 ms
Conditions of activation of the diagnostics	Engine running
Conditions of disappearance of the fault	Driving for 5 minutes
Down-grade modes if fault present	-
Switching on of the warning lamp and/or warning message	Engine diagnosis warning lamp
Main customer complaints likely	Slightly higher fuel consumption
Suspect areas	Oxygen sensor
	Electrical harness
	Connectors

Fault code(s): P2187 or P2188 or P2297

Reminder DTC

Do not do Ctrl+x section for the FLOW CHART phase

DTC no.	Alternative text of the DTC	Fault bit	Conditions for fault finding	Downgraded mode after a fault is ascertained	Check Engine light (MIL)	Suspected areas Major control steps	The client effect(s) (symptom(s)) associated with the DTCs	Fault code(s) to be dealt with before working through this flow chart	Tools required
P2187	System richness: Too enough fuel when idling	0							
P2188	System richness: Too much fuel when idling	0							
P2297	Oxygen sensor: Oxygen communication not plausible with engine load	0							

PRE-CHECK

FLOW CHART Test procedure

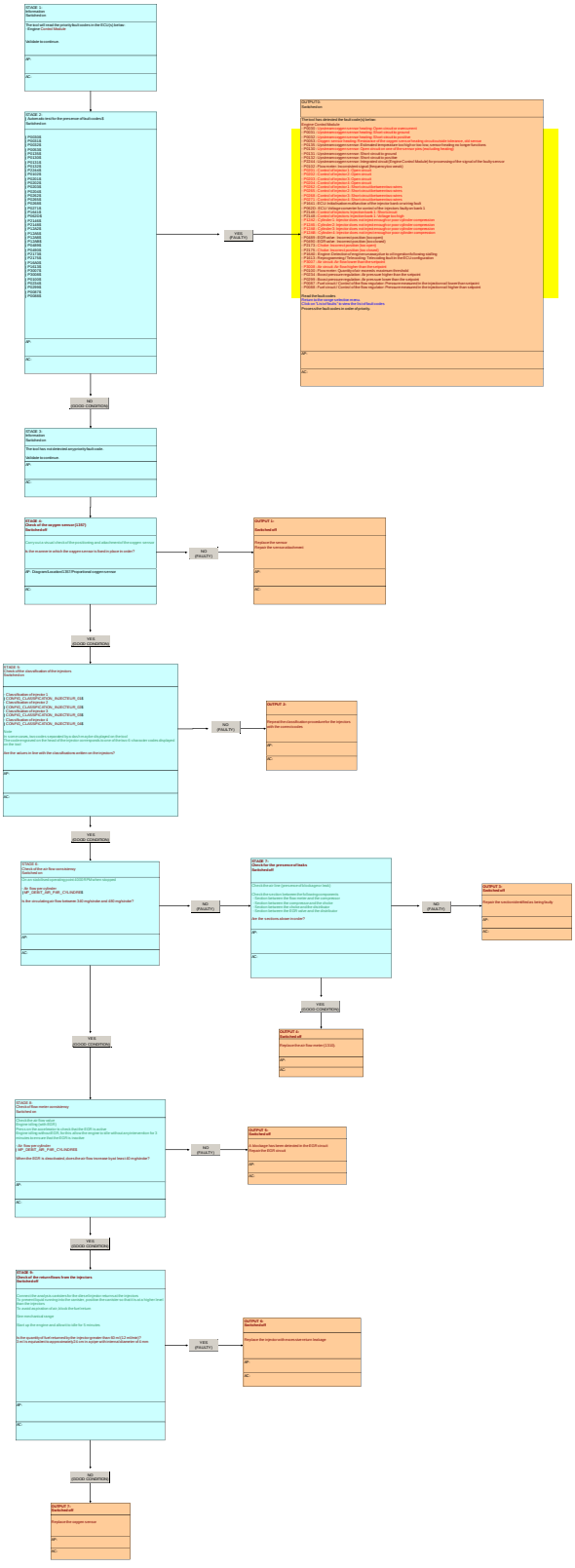

INFORMATION : FAULT CODE P2227 (ENGINE MANAGEMENT ECU)

SPECIAL FEATURE :

FOR : 1CB7 - B0FBM : DV6C TURBO DIESEL

FOR : 1CX7 - B0FBM : DV6C TURBO DIESEL

FOR : 1C58 - B0FBM : DV6C TURBO DIESEL

FOR : 1PT7 - B0FBM : DV6C TURBO DIESEL

FOR : 1PW2 - B0FBM : DV6C TURBO DIESEL

FOR : 1CB8 - B0FBM : DV6C TURBO DIESEL

FOR : 1CXA - B0FBM : DV6C TURBO DIESEL

FOR : 1CYA - B0FBM : DV6C TURBO DIESEL

FOR : 1PTB - B0FBM : DV6C TURBO DIESEL

FOR : 1PTC - B0FBM : DV6C TURBO DIESEL

FOR : 1PIA - B0FBM : DV6C TURBO DIESEL

FOR : 1CMJ - B0FBM : DV6C TURBO DIESEL

FOR : 1PMJ - B0FBM : DV6C TURBO DIESEL

Engine ECU CONTINENTAL SID 807 branch 2	
Fault code	P2227
After sales description of the fault code	Measurement of the atmospheric pressure : Voltage variation outside the tolerance
Description of the diagnostics	Variation in the pressure more than 1 bars per period of 100 ms
Conditions of activation of the diagnostics	engine running
Conditions of disappearance of the fault	Driving for 5 minutes
Down-grade modes	Closing of the EGR (exhaust gas recycling) valve
	Reversible deactivation of the vehicle speed limiter
	Reversible deactivation of the vehicle cruise control
	Switching of the turbocharging pressure regulation to controlled mode
	Deactivation of the request for regeneration of the particle

if fault present	filter from the diagnostic tool
	Deactivation of the "easy-move" (electric parking brake) functionality
	For a gearbox with engine speed regulation (automatic gearbox or piloted manual gearbox), limitation of the torque sent to the gearbox
Switching on of the warning lamp and/or warning message	Warning lamp MIL
Main customer complaints likely	Jerking/stalling
	Noise
	Lack of power
	Absence of automatic stopping of the internal combustion engine (Vehicle with "Stop and Start")
	Problem with automatic restarting of the internal combustion engine (Vehicle with "Stop and Start")
Suspect areas	Engine ECU

Fault code(s): P2227 or P2228 or P2229

Reminder DTC

Do not fill in this section for the FLOW CHART phase

DTC no.	Aftersales text of the DTC	Fault type	Conditions for fault finding	Downgraded mode after a fault is ascertained	Illumination of warning light	Suspected areas Major control steps	The client effect(s)/symptom(s) associated with the DTCs	Fault code(s) to be dealt with before working through this flow chart	Tools required
P2227	Atmospheric pressure sensor: Voltage variation outside tolerance	EE							
P2228	Atmospheric pressure sensor: Value too low, short-circuit to ground	EE							
P2229	Atmospheric pressure sensor: Value too high, short-circuit to positive or open circuit	EE							

PRE-CHECK

FLOW CHART Test procedure

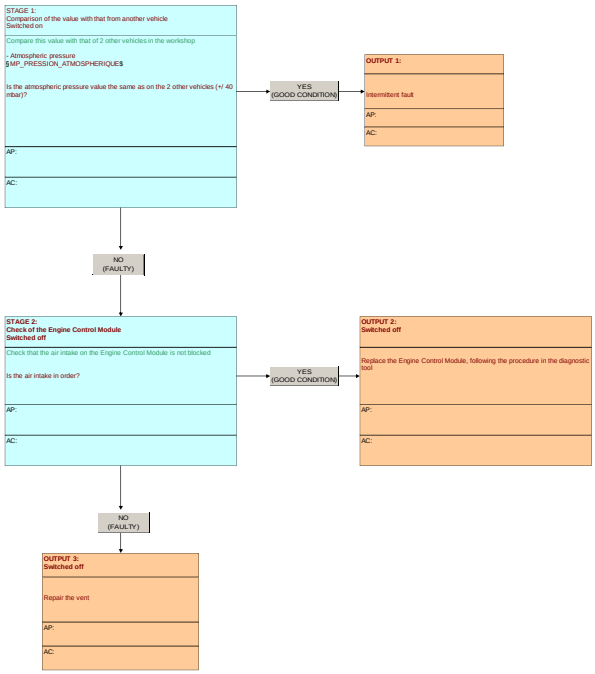

INFORMATION : FAULT CODE P2228 (ENGINE MANAGEMENT ECU)

SPECIAL FEATURE :

FOR : 1CB7 - B0FBM : DV6C TURBO DIESEL

FOR : 1CX7 - B0FBM : DV6C TURBO DIESEL

FOR : 1C58 - B0FBM : DV6C TURBO DIESEL

FOR : 1PT7 - B0FBM : DV6C TURBO DIESEL

FOR : 1PW2 - B0FBM : DV6C TURBO DIESEL

FOR : 1CB8 - B0FBM : DV6C TURBO DIESEL

FOR : 1CXA - B0FBM : DV6C TURBO DIESEL

FOR : 1CYA - B0FBM : DV6C TURBO DIESEL

FOR : 1PTB - B0FBM : DV6C TURBO DIESEL

FOR : 1PTC - B0FBM : DV6C TURBO DIESEL

FOR : 1PIA - B0FBM : DV6C TURBO DIESEL

FOR : 1CMJ - B0FBM : DV6C TURBO DIESEL

FOR : 1PMJ - B0FBM : DV6C TURBO DIESEL

Engine ECU CONTINENTAL SID 807 branch 2	
Fault code	P2228
After sales description of the fault code	Measurement of the atmospheric pressure : Value too low
Description of the diagnostics	Voltage lower than 0,2V for at least 10 seconds
Conditions of activation of the diagnostics	engine running
Conditions of disappearance of the fault	Driving for 5 minutes
Down-grade modes if fault present	Closing of the EGR (exhaust gas recycling) valve
	Reversible deactivation of the vehicle speed limiter
	Reversible deactivation of the vehicle cruise control
	Deactivation of the "easy-move" (electric parking brake) functionality
	Deactivation of the request for regeneration of the particle filter from the diagnostic tool

	For a gearbox with engine speed regulation (automatic gearbox or piloted manual gearbox), limitation of the torque sent to the gearbox
	Switching of the turbocharging pressure regulation to controlled mode
Switching on of the warning lamp and/or warning message	Warning lamp MIL
Main customer complaints likely	Jerking/stalling
	Noise
	Lack of power
	No automatic stopping of the internal combustion engine (Vehicle equipped with "stop and start")
	Problem with automatic restarting of the internal combustion engine (Vehicle equipped with "stop and start")
Suspect areas	Engine ECU

Fault code(s): P2227 or P2228 or P2229

Reminder DTC

Do not fill in this section for the FLOW CHART phase

DTC no.	Aftersales text of the DTC	Fault type	Conditions for fault finding	Downgraded mode after a fault is ascertained	Does it all turn on warning light	Suspected areas Major control steps	The client effect(s)/symptom(s) associated with the DTCs	Fault code(s) to be dealt with before working through this flow chart	Tools required
P2227	Atmospheric pressure sensor: Voltage variation outside tolerance	EE							
P2228	Atmospheric pressure sensor: Value too low, short-circuit to ground	EE							
P2229	Atmospheric pressure sensor: Value too high, short-circuit to positive or open circuit	EE							

PRE-CHECK

FLOW CHART Test procedure

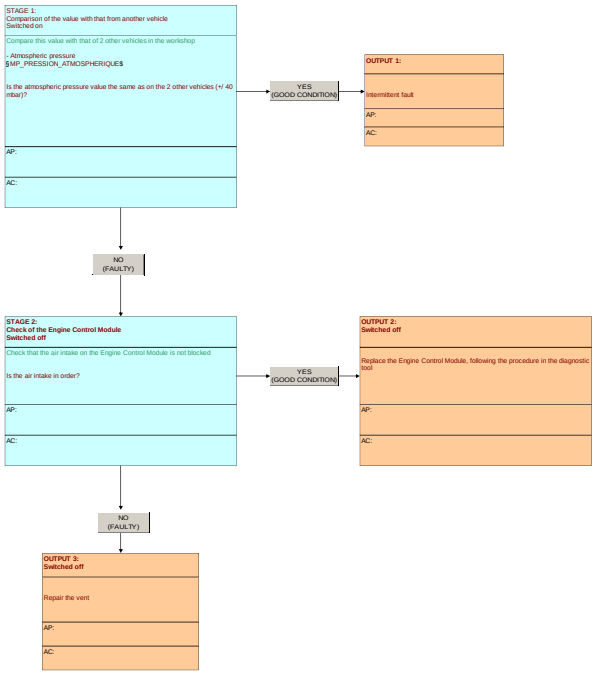

INFORMATION : FAULT CODE P2229 (ENGINE MANAGEMENT ECU)

SPECIAL FEATURE :

FOR : 1CB7 - B0FBM : DV6C TURBO DIESEL

FOR : 1CX7 - B0FBM : DV6C TURBO DIESEL

FOR : 1C58 - B0FBM : DV6C TURBO DIESEL

FOR : 1PT7 - B0FBM : DV6C TURBO DIESEL

FOR : 1PW2 - B0FBM : DV6C TURBO DIESEL

FOR : 1CB8 - B0FBM : DV6C TURBO DIESEL

FOR : 1CXA - B0FBM : DV6C TURBO DIESEL

FOR : 1CYA - B0FBM : DV6C TURBO DIESEL

FOR : 1PTB - B0FBM : DV6C TURBO DIESEL

FOR : 1PTC - B0FBM : DV6C TURBO DIESEL

FOR : 1PIA - B0FBM : DV6C TURBO DIESEL

FOR : 1CMJ - B0FBM : DV6C TURBO DIESEL

FOR : 1PMJ - B0FBM : DV6C TURBO DIESEL

Engine ECU CONTINENTAL SID 807 branch 2	
Fault code	P2229
After sales description of the fault code	Measurement of the atmospheric pressure : Value too high
Description of the diagnostics	Voltage higher than 4,9 V for 10 seconds
Conditions of activation of the diagnostics	engine running
Conditions of disappearance of the fault	Driving for 5 minutes
Down-grade modes if fault present	Closing of the EGR (exhaust gas recycling) valve
	Reversible deactivation of the vehicle speed limiter
	Reversible deactivation of the vehicle cruise control
	Deactivation of the "easy-move" (electric parking brake) functionality
	Deactivation of the request for regeneration of the particle filter from the diagnostic tool

	Switching of the turbocharging pressure regulation to controlled mode
	For a gearbox with engine speed regulation (automatic gearbox or piloted manual gearbox), limitation of the torque sent to the gearbox
Switching on of the warning lamp and/or warning message	Warning lamp MIL
Main customer complaints likely	Jerking/stalling
	Noise
	Lack of power
	Absence of automatic stopping of the internal combustion engine (Vehicle equipped with "stop and start")
	Problem with automatic restarting of the internal combustion engine (Vehicle equipped with "stop and start")
Suspect areas	Engine ECU

Fault code(s): P2227 or P2228 or P2229

Reminder DTC

Do not fill in this section for the FLOW CHART phase

DTC no.	Aftersales text of the DTC	Fault type	Conditions for fault finding	Downgraded mode after a fault is ascertained	Does it all turn on a warning light	Suspected areas Major control steps	The client effect(s)/symptom(s) associated with the DTCs	Fault code(s) to be dealt with before working through this flow chart	Tools required
P2227	Atmospheric pressure sensor: Voltage variation outside tolerance	EE							
P2228	Atmospheric pressure sensor: Value too low, short-circuit to ground	EE							
P2229	Atmospheric pressure sensor: Value too high, short-circuit to positive or open circuit	EE							

PRE-CHECK

FLOW CHART Test procedure

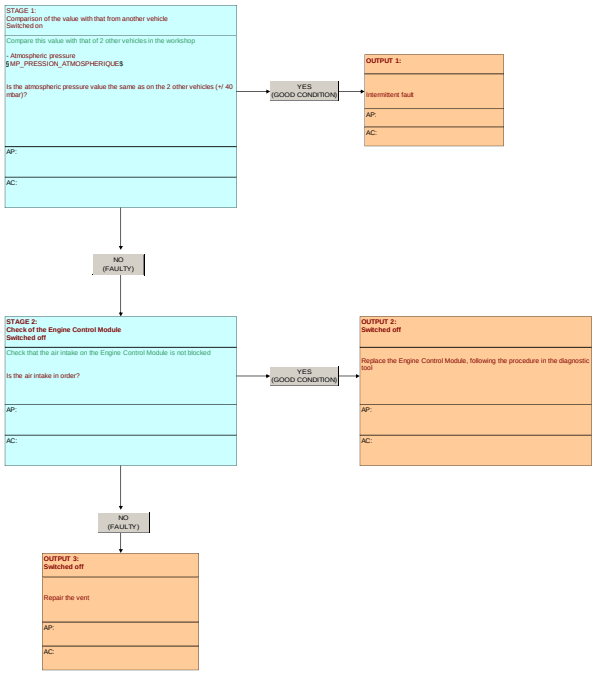

INFORMATION : FAULT CODE P2244 (ENGINE MANAGEMENT ECU)

SPECIAL FEATURE :

FOR : 1CB7 - B0FBM : DV6C TURBO DIESEL

FOR : 1CB8 - B0FBM : DV6C TURBO DIESEL

FOR : 1CXA - B0FBM : DV6C TURBO DIESEL

FOR : 1CX7 - B0FBM : DV6C TURBO DIESEL

FOR : 1CYA - B0FBM : DV6C TURBO DIESEL

FOR : 1C58 - B0FBM : DV6C TURBO DIESEL

FOR : 1PTB - B0FBM : DV6C TURBO DIESEL

FOR : 1PTC - B0FBM : DV6C TURBO DIESEL

FOR : 1PT7 - B0FBM : DV6C TURBO DIESEL

FOR : 1PW2 - B0FBM : DV6C TURBO DIESEL

FOR : 1PIA - B0FBM : DV6C TURBO DIESEL

FOR : 1CMJ - B0FBM : DV6C TURBO DIESEL

FOR : 1PMJ - B0FBM : DV6C TURBO DIESEL

Engine ECU CONTINENTAL SID 807 branch 2	
Fault code	P2244
After sales description of the fault code	Mixture of the system : Integrated slave circuit of the sensor faulty
Description of the diagnostics	Engine management ECU internal fault detected for 500 ms
Conditions of activation of the diagnostics	At least one of the following conditions must be fulfilled - Ignition switched on - engine running
Conditions of disappearance of the fault	Driving for 5 minutes
Down-grade modes if fault present	-
Switching on of the warning lamp and/or warning message	-

Main customer complaints likely	Slightly higher fuel consumption
Suspect areas	Oxygen sensor
	Electrical harness
	Connectors

Fault code(s): P0130 or P0131 or P0132 or P2244

Reminder DTC

Do not fill in this section for the FLOW CHART phase

DTC no.	Alternates text of the DTC	Fault type	Conditions for fault finding	Downgraded mode after a fault is ascertained	Driver alert lamp	Suspected zones Major control steps	The client effect(Symptom(s)) associated with the DTC	Fault code(s) to be dealt with before working through this flow chart	Tools required
P0130	Upstream oxygen sensor: Open circuit on one of the sensor pins (including heating)	00							
P0131	Upstream oxygen sensor: Short-circuit to ground	00							
P0132	Upstream oxygen sensor: Short-circuit to positive	00							
P2244	Upstream oxygen sensor: Integrated circuit (Engine Control Module) for processing of the signal of the faulty sensor	00							

PRE-CHECK
FLOW CHART Test procedure

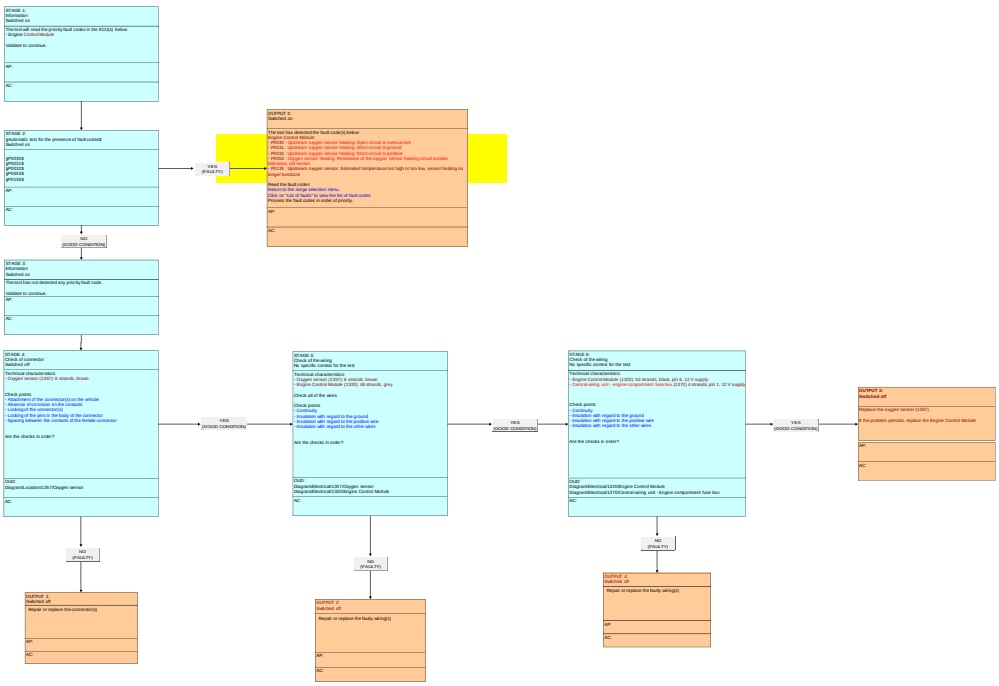

INFORMATION : FAULT CODE P2265 (ENGINE MANAGEMENT ECU)

SPECIAL FEATURE :

FOR : 1CB7 - B0FBM : DV6C TURBO DIESEL

FOR : 1CX7 - B0FBM : DV6C TURBO DIESEL

FOR : 1C58 - B0FBM : DV6C TURBO DIESEL

FOR : 1PT7 - B0FBM : DV6C TURBO DIESEL

FOR : 1PW2 - B0FBM : DV6C TURBO DIESEL

FOR : 1CB8 - B0FBM : DV6C TURBO DIESEL

FOR : 1CXA - B0FBM : DV6C TURBO DIESEL

FOR : 1CYA - B0FBM : DV6C TURBO DIESEL

FOR : 1PTB - B0FBM : DV6C TURBO DIESEL

FOR : 1PTC - B0FBM : DV6C TURBO DIESEL

FOR : 1PIA - B0FBM : DV6C TURBO DIESEL

FOR : 1CMJ - B0FBM : DV6C TURBO DIESEL

FOR : 1PMJ - B0FBM : DV6C TURBO DIESEL

Engine ECU CONTINENTAL SID 807 branch 2	
Fault code	P2265
After sales description of the fault code	Water-in-diesel-fuel sensor : Open circuit or short circuit to positive
Description of the diagnostics	Electrical fault detected for 1 s
Conditions of activation of the diagnostics	engine running
Conditions of disappearance of the fault	Driving for 5 minutes
Down-grade modes if fault present	-
Switching on of the warning lamp and/or warning message	-

Main customer complaints likely	Jerking/stalling
	Lack of power
	Starting problem
Suspect areas	Poor quality of the fuel or type of fuel
	Water-in-fuel sensor
	Fuse
	Electrical harness
	Connectors

Fault code(s): P2265

Reminder DTC

Do not fill in this section for the FLOW CHART phase

DTC no.	Aftersales text of the DTC	Code type	Conditions for fault finding	Downgraded mode after a fault is ascertained	Driving safety risk	Suspected areas Major control loops	The client effect(s)/symptom(s) associated with the DTCs	Fault code(s) to be dealt with before working through this flow chart	Tools required
P2265	Sensor to detect water in the diesel: Short-circuit to positive or open circuit	Hrt							

PRE-CHECK

FLOW CHART Test procedure

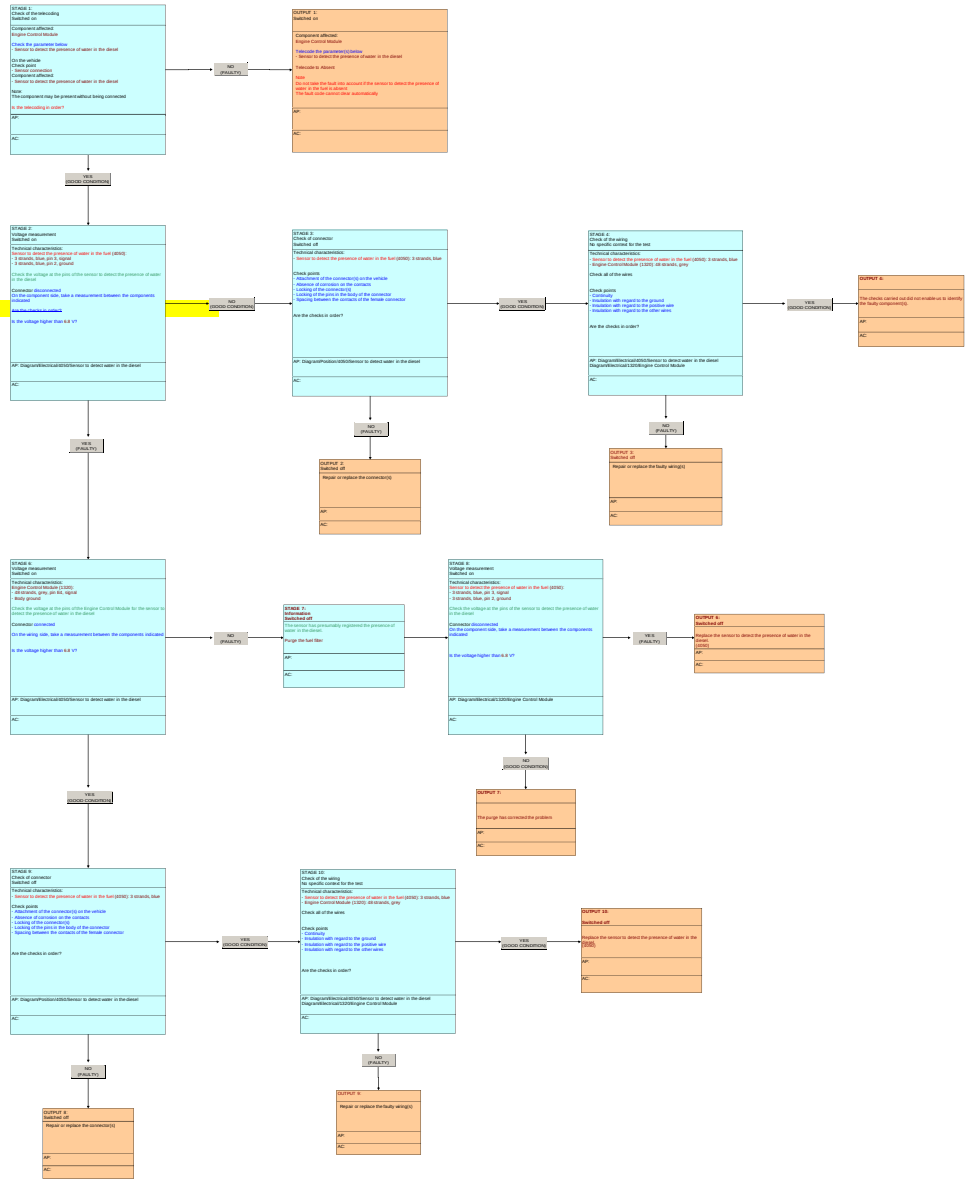

INFORMATION : FAULT CODE P2291 (ENGINE MANAGEMENT ECU)

SPECIAL FEATURE :

FOR : 1CB7 - B0FBM : DV6C TURBO DIESEL

FOR : 1CX7 - B0FBM : DV6C TURBO DIESEL

FOR : 1C58 - B0FBM : DV6C TURBO DIESEL

FOR : 1PT7 - B0FBM : DV6C TURBO DIESEL

FOR : 1PW2 - B0FBM : DV6C TURBO DIESEL

FOR : 1CB8 - B0FBM : DV6C TURBO DIESEL

FOR : 1CXA - B0FBM : DV6C TURBO DIESEL

FOR : 1CYA - B0FBM : DV6C TURBO DIESEL

FOR : 1PTB - B0FBM : DV6C TURBO DIESEL

FOR : 1PTC - B0FBM : DV6C TURBO DIESEL

FOR : 1PIA - B0FBM : DV6C TURBO DIESEL

FOR : 1CMJ - B0FBM : DV6C TURBO DIESEL

FOR : 1PMJ - B0FBM : DV6C TURBO DIESEL

Engine ECU CONTINENTAL SID 807 branch 2	
Fault code	P2291
After sales description of the fault code	Starting monitoring : Pressure increase in the injection rail too slow when starting
Description of the diagnostics	Fuel injection common rail pressure increase time too long (Threshold at 700 ms when the coolant temperature is 5°C)
Conditions of activation of the diagnostics	Under starter
Conditions of disappearance of the fault	When starting a warm engine
Down-grade modes if fault present	-
Switching on of the warning lamp and/or warning	-

message	
Main customer complaints likely	Starting problem
	Fluid leak/smells (diesel fuel, oil, etc.)
	Smoke from the exhaust
	Slightly higher fuel consumption
	Jerking/stalling
	Lack of power
	Engine stop downgraded
Suspect areas	Air leak on the fuel filter
	Clogging of the fuel filter
	Running out of fuel
	Leak in fuel circuit (low pressure)
	Fuel high pressure flow regulator
	high pressure fuel pump
	Leak on the high pressure fuel pipes
	Leak on the fuel high pressure common injection rail
	Fuel injectors
	Electrical harnesses
	Connectors

Fault code(s): P0087 or P0093 or P2291

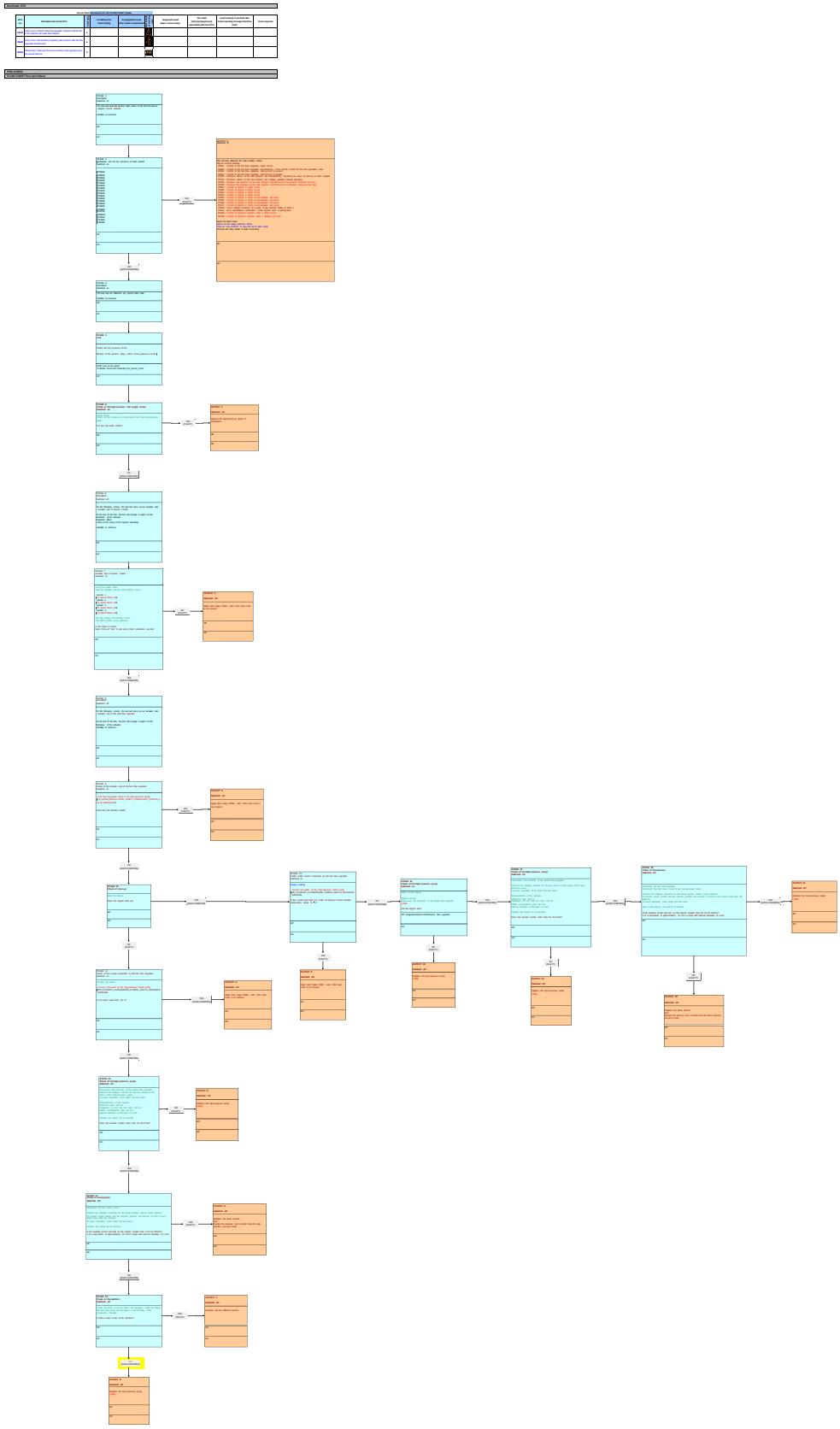

INFORMATION : FAULT CODE P2297 (ENGINE MANAGEMENT ECU)

SPECIAL FEATURE :

FOR : 1CB7 - B0FBM

FOR : 1CB8 - B0FBM

FOR : 1CXA - B0FBM

FOR : 1CX7 - B0FBM

FOR : 1CYA - B0FBM

FOR : 1C58 - B0FBM

FOR : 1PIA - B0FBM

FOR : 1PTB - B0FBM

FOR : 1PTC - B0FBM

FOR : 1PT7 - B0FBM

FOR : 1PW2 - B0FBM

FOR : 1CMJ - B0FBM

FOR : 1PMJ - B0FBM

Engine ECU CONTINENTAL SID 807 branch 2	
Fault code	P2297
After sales description of the fault code	Oxygen sensor heating : Oxygen concentration not plausible when the pedal is released
Description of the diagnostics	Electrical fault detected for 500 ms
Conditions of activation of the diagnostics	Engine running
Conditions of disappearance of the fault	Driving for 5 minutes
Down-grade modes if fault present	-
Switching on of the warning lamp and/or warning message	Engine diagnosis warning lamp
Main customer complaints likely	Slightly higher fuel consumption
Suspect areas	Oxygen sensor
	Electrical harness
	Connectors

Fault code(s): P2187 or P2188 or P2297

Reminder DTC

Do not do clicks section for the FLOW CHART phase

DTC no.	Alternative text of the DTC	Fault type	Conditions for fault finding	Demographic mode after a fault is ascertained	Check Engine light (MIL)	Suspected areas Major control steps	The client effect(s) (symptom(s)) associated with the DTCs	Fault code(s) to be dealt with before working through this flow chart	Tests required
P2187	System richness: Too enough fuel when idling	A							
P2188	System richness: Too much fuel when idling	A							
P2297	Oxygen sensor: Oxygen communication not plausible with engine load	A							

PRE-CHECK

FLOW CHART Test procedure

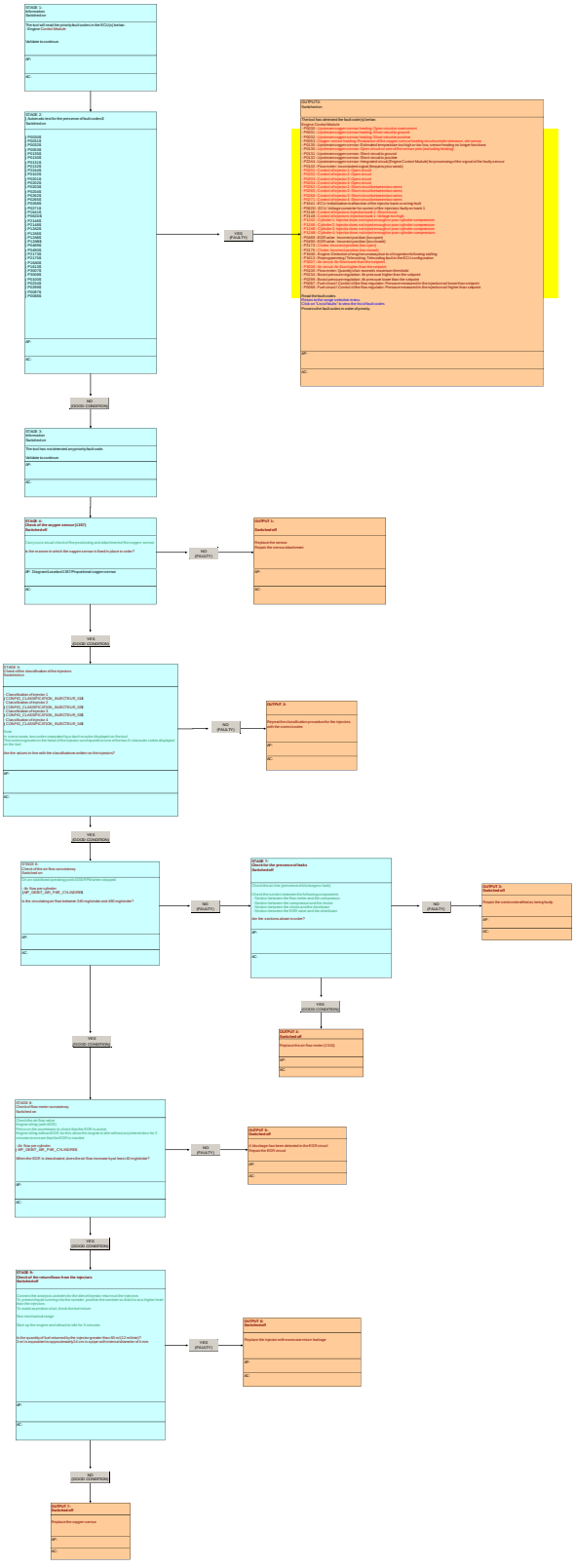

INFORMATION : FAULT CODE P2299 (ENGINE MANAGEMENT ECU)

SPECIAL FEATURE :

FOR : 1CB7 - B0FBM : DV6C TURBO DIESEL

FOR : 1CX7 - B0FBM : DV6C TURBO DIESEL

FOR : 1C58 - B0FBM : DV6C TURBO DIESEL

FOR : 1PT7 - B0FBM : DV6C TURBO DIESEL

FOR : 1PW2 - B0FBM : DV6C TURBO DIESEL

FOR : 1CB8 - B0FBM : DV6C TURBO DIESEL

FOR : 1CXA - B0FBM : DV6C TURBO DIESEL

FOR : 1CYA - B0FBM : DV6C TURBO DIESEL

FOR : 1PTB - B0FBM : DV6C TURBO DIESEL

FOR : 1PTC - B0FBM : DV6C TURBO DIESEL

FOR : 1PIA - B0FBM : DV6C TURBO DIESEL

FOR : 1CMJ - B0FBM : DV6C TURBO DIESEL

FOR : 1PMJ - B0FBM : DV6C TURBO DIESEL

Engine ECU CONTINENTAL SID 807 branch 2	
Fault code	P2299
After sales description of the fault code	Measurement of the accelerator pedal position : Pedal jammed or applied at the same time as the brake pedal
Description of the diagnostics	Accelerator pedal pressed down at least 20% with a movement smaller than 3% and the brake actioned simultaneously for 3 s
Conditions of activation of the diagnostics	The following conditions have to be met - Engine speed above 1100 rpm - Vehicle speed higher than 3 km/h
Conditions of disappearance of the fault	Driving for 5 minutes
Down-grade modes if fault present	Reversible deactivation of the vehicle cruise control
	Deactivation of the "easy-move" (electric parking brake) functionality

	Irreversible deactivation of the vehicle speed limiter
Switching on of the warning lamp and/or warning message	-
Main customer complaints likely	Jerking/stalling
	Engine acceleration at wrong time
	Lack of power
Suspect areas	Foot throttle pedal
	Brake pedal switch
	Electrical harnesses
	Connectors

Fault code(s): P2299

Reminder DTC

Do not fill in this section for the FLOW CHART phase

DTC no.	Aftersales text of the DTC	Fault type	Conditions for fault finding	Downgraded mode after a fault is ascertained	Electrical diagram of system	Suspected areas Major control steps	The client effects/symptom(s) associated with the DTCs	Fault code(s) to be dealt with before working through this flow chart	Tools required
P2299	Accelerator pedal sensor: Pedal blocked or pressed simultaneously with the brake pedal	DS							

PRE-CHECK

FLOW CHART Test procedure

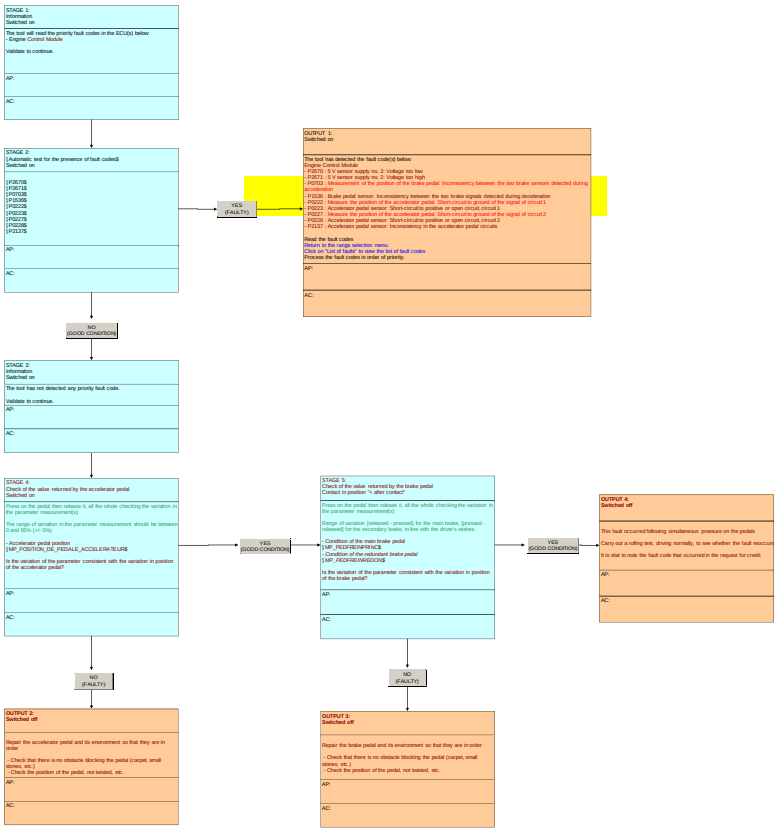

INFORMATION : FAULT CODE P2413 (ENGINE MANAGEMENT ECU)

SPECIAL FEATURE :

FOR : 1CB7 - B0FBM : DV6C TURBO DIESEL

FOR : 1CX7 - B0FBM : DV6C TURBO DIESEL

FOR : 1C58 - B0FBM : DV6C TURBO DIESEL

FOR : 1PT7 - B0FBM : DV6C TURBO DIESEL

FOR : 1PW2 - B0FBM : DV6C TURBO DIESEL

FOR : 1CB8 - B0FBM : DV6C TURBO DIESEL

FOR : 1CXA - B0FBM : DV6C TURBO DIESEL

FOR : 1CYA - B0FBM : DV6C TURBO DIESEL

FOR : 1PTB - B0FBM : DV6C TURBO DIESEL

FOR : 1PTC - B0FBM : DV6C TURBO DIESEL

FOR : 1PIA - B0FBM : DV6C TURBO DIESEL

FOR : 1CMJ - B0FBM : DV6C TURBO DIESEL

FOR : 1PMJ - B0FBM : DV6C TURBO DIESEL

Engine ECU CONTINENTAL SID 807 branch 2	
Fault code	P2413
After sales description of the fault code	Control of the EGR valve : Overheating or excess current
Description of the diagnostics	The ECU detects an error on the control current of the EGR valve (Control current higher than 4 A for 200 ms)
Conditions of activation of the diagnostics	Engine running
Conditions of disappearance of the fault	Driving for 5 minutes
Down-grade modes if fault present	Closing of the EGR (exhaust gas recycling) valve
	Switching of the turbocharging pressure regulation to controlled mode
	Deactivation of the request for regeneration of the particle filter from the diagnostic tool
Switching on of the	

warning lamp and/or warning message	Warning lamp MIL
Main customer complaints likely	Jerking/stalling
	Starting problem
	Lack of power
Suspect areas	Exhaust gas recycling valve
	Electrical harness
	Connectors

Fault code(s): P2144 or P2413

Reminder DTC

Do not fill in this section for the FLOW CHART phase

DTC no.	Alternative text of the DTC	First trip	Conditions for fault finding	Downgraded mode after a fault is ascertained	Malfunction Indicator Lamp (MIL)	Suspected areas Major control steps	The check effect(s)/symptom(s) associated with the DTCs	Fault code(s) to be dealt with before working through this flow chart	Tools required
P2144	Control of EGR valve 1: Short-circuit to ground	Yes							
P2413	Control of EGR valve 1: Overcurrent on the valve control in the ECU	Yes							

PRE-CHECK

FLOW CHART Test procedure

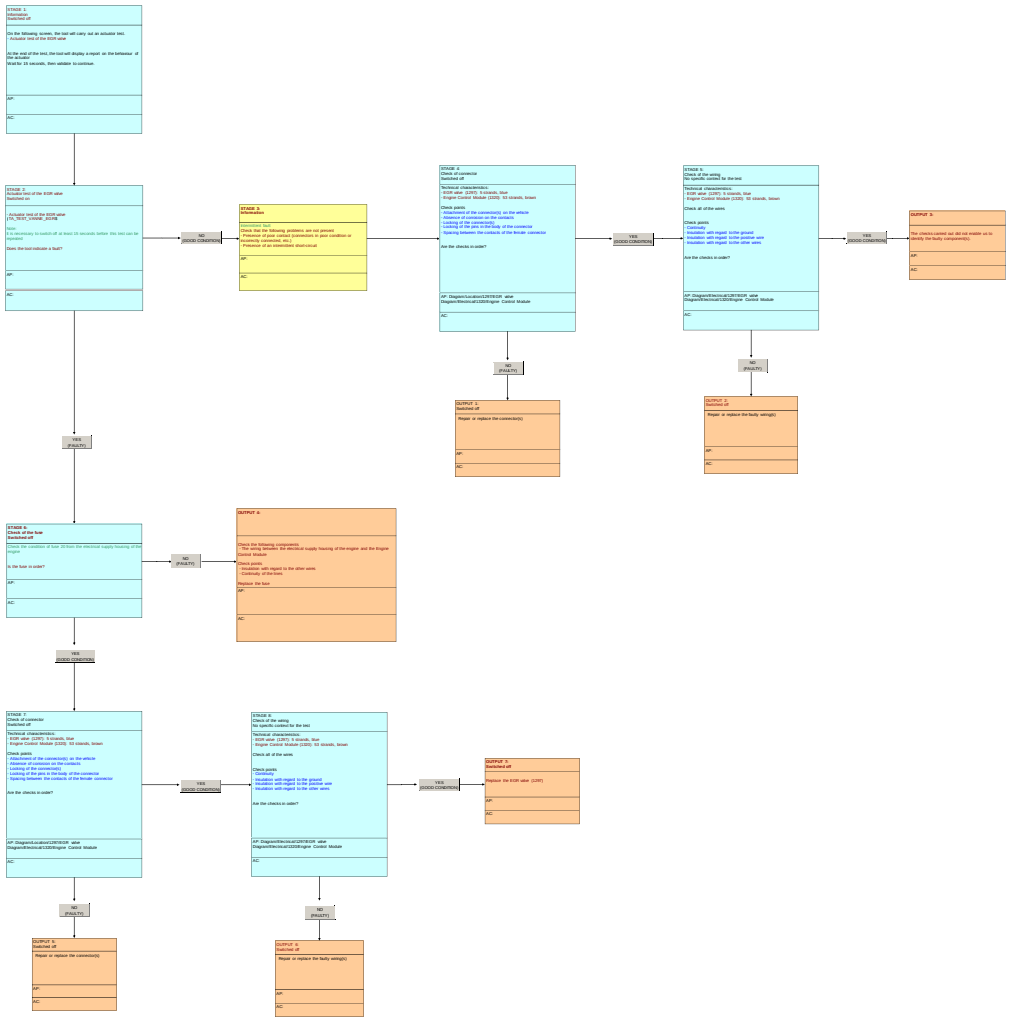

INFORMATION : FAULT CODE P2425 (ENGINE MANAGEMENT ECU)

SPECIAL FEATURE :

FOR : 1CB7 - B0FBM : DV6C TURBO DIESEL

FOR : 1CB8 - B0FBM : DV6C TURBO DIESEL

FOR : 1CXA - B0FBM : DV6C TURBO DIESEL

FOR : 1CX7 - B0FBM : DV6C TURBO DIESEL

FOR : 1CYA - B0FBM : DV6C TURBO DIESEL

FOR : 1C58 - B0FBM : DV6C TURBO DIESEL

FOR : 1PIA - B0FBM : DV6C TURBO DIESEL

FOR : 1PTB - B0FBM : DV6C TURBO DIESEL

FOR : 1PTC - B0FBM : DV6C TURBO DIESEL

FOR : 1PT7 - B0FBM : DV6C TURBO DIESEL

FOR : 1PW2 - B0FBM : DV6C TURBO DIESEL

FOR : 1CMJ - B0FBM : DV6C TURBO DIESEL

FOR : 1PMJ - B0FBM : DV6C TURBO DIESEL

Engine ECU CONTINENTAL SID 807 branch 2	
Fault code	P2425
After sales description of the fault code	Control of the Bypass of the EGR exchanger : Open circuit
Description of the diagnostics	Electrical fault detected for 200 ms
Conditions of activation of the diagnostics	engine running
Conditions of disappearance of the fault	Driving for 5 minutes
Down-grade modes if fault present	-
Switching on of the warning lamp and/or warning message	-

Main customer complaints likely	-
Suspect areas	EGR exchanger bypass
	EGR exchanger bypass control solenoid valve
	Fuse
	Electrical harnesses
	Connectors

Fault code(s): P2425 or P2426 or P2427

Remember DTC:

Be sure you have selected the FLOW CHART phase

DTC on	Alternative text of the DTC	Type of fault finding	Conditions for fault finding	Downgraded into DTC if fault not ascertained	Type of fault finding	Suspected area Major control steps	The client effect (driveability) encountered with the DTC's	Fault code(s) to be dealt with before addressing this fault code
P2425	EGR's cooler bypass: Open circuit	OK						
P2426	EGR's cooler bypass: Short circuit to ground	OK						
P2427	EGR's cooler bypass: Short circuit to positive	OK						

PRE-CHECK

FLOW CHART: Test procedure

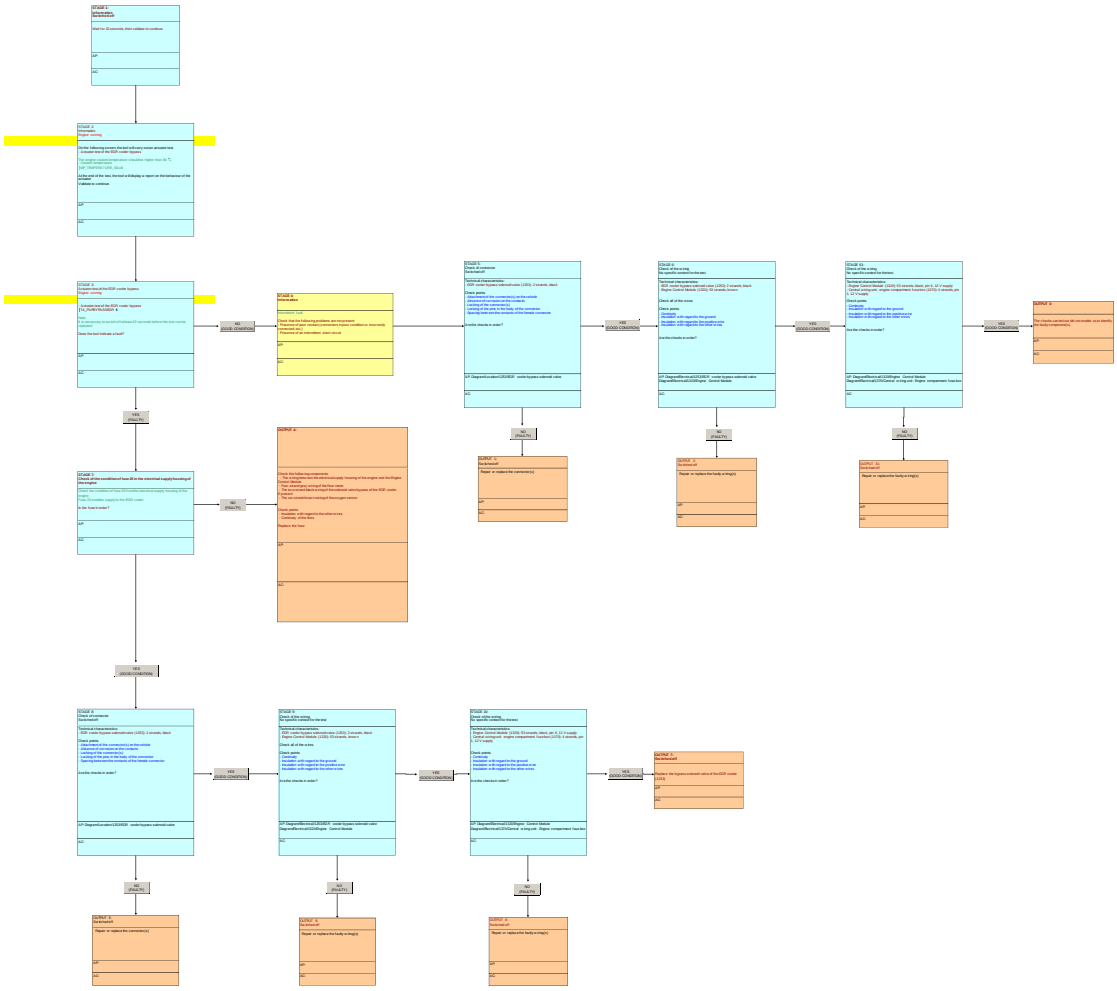

INFORMATION : FAULT CODE P2426 (ENGINE MANAGEMENT ECU)

SPECIAL FEATURE :

FOR : 1CB7 - B0FBM : DV6C TURBO DIESEL

FOR : 1CB8 - B0FBM : DV6C TURBO DIESEL

FOR : 1CXA - B0FBM : DV6C TURBO DIESEL

FOR : 1CX7 - B0FBM : DV6C TURBO DIESEL

FOR : 1CYA - B0FBM : DV6C TURBO DIESEL

FOR : 1C58 - B0FBM : DV6C TURBO DIESEL

FOR : 1PIA - B0FBM : DV6C TURBO DIESEL

FOR : 1PTB - B0FBM : DV6C TURBO DIESEL

FOR : 1PTC - B0FBM : DV6C TURBO DIESEL

FOR : 1PT7 - B0FBM : DV6C TURBO DIESEL

FOR : 1PW2 - B0FBM : DV6C TURBO DIESEL

FOR : 1CMJ - B0FBM : DV6C TURBO DIESEL

FOR : 1PMJ - B0FBM : DV6C TURBO DIESEL

Engine ECU CONTINENTAL SID 807 branch 2	
Fault code	P2426
After sales description of the fault code	Control of the Bypass of the EGR exchanger : Short circuit to earth
Description of the diagnostics	Electrical fault detected for 200 ms
Conditions of activation of the diagnostics	engine running
Conditions of disappearance of the fault	Driving for 5 minutes
Down-grade modes if fault present	-
Switching on of the warning lamp and/or warning message	-

Main customer complaints likely	-
Suspect areas	EGR exchanger bypass
	EGR exchanger bypass control solenoid valve
	Fuse
	Electrical harnesses
	Connectors

Fault code(s): P2425 or P2426 or P2427

Remember DTC

Be sure you have selected the FLOW CHART phase

DTC on	Alternative text of the DTC	MIL on	Conditions for fault finding	Downgraded in any other DTC occurred	Fail safe mode	Suspected areas Major control steps	The client effects (driveability) associated with the DTC's	Fault code(s) to be dealt with before working on the current fault code	Tools required
P2425	EGR's cooler bypass: Open circuit	ON							
P2426	EGR's cooler bypass: Short circuit to ground	ON							
P2427	EGR's cooler bypass: Short circuit to positive	ON							

PRE-CHECK

FLOW CHART: Test procedure

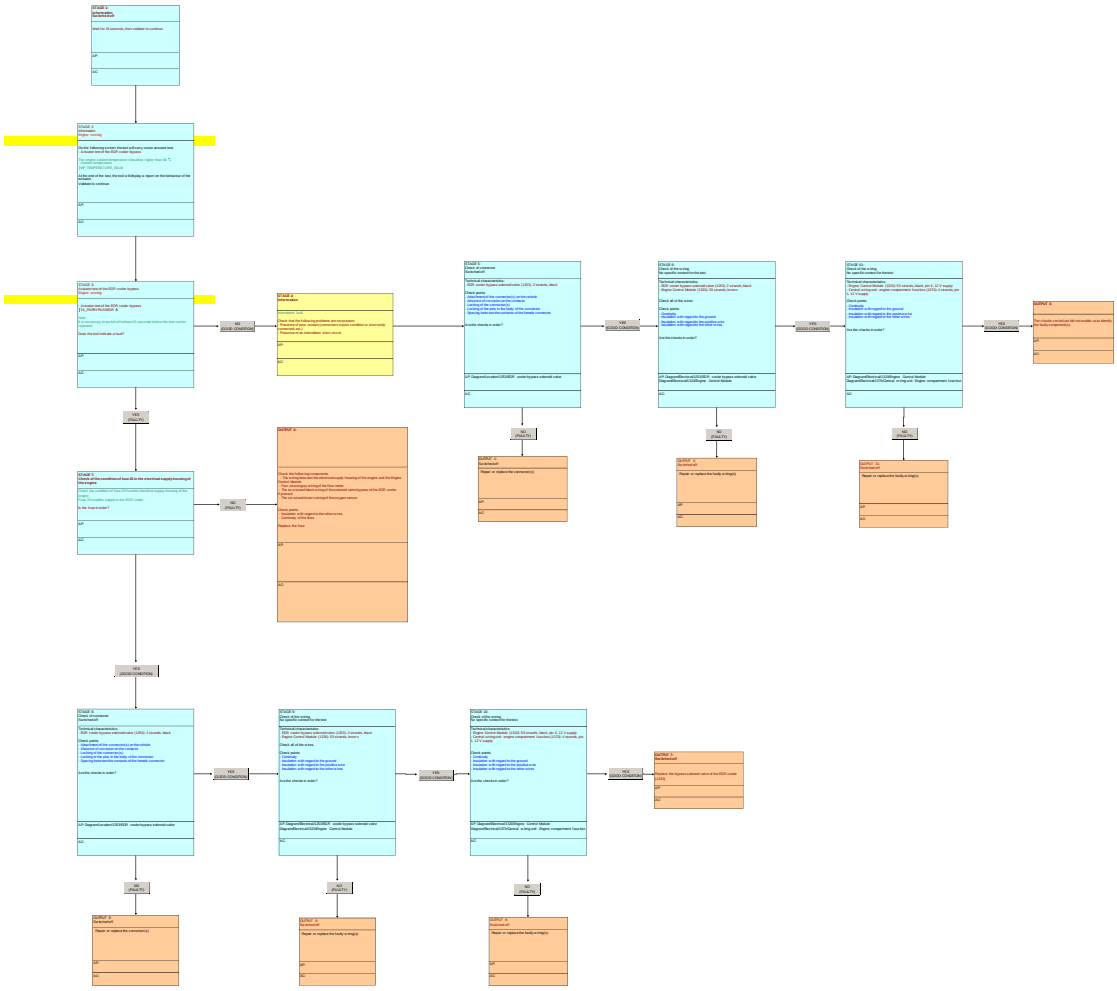

INFORMATION : FAULT CODE P2427 (ENGINE MANAGEMENT ECU)

SPECIAL FEATURE :

FOR : 1CB7 - B0FBM : DV6C TURBO DIESEL

FOR : 1CB8 - B0FBM : DV6C TURBO DIESEL

FOR : 1CXA - B0FBM : DV6C TURBO DIESEL

FOR : 1CX7 - B0FBM : DV6C TURBO DIESEL

FOR : 1CYA - B0FBM : DV6C TURBO DIESEL

FOR : 1C58 - B0FBM : DV6C TURBO DIESEL

FOR : 1PTB - B0FBM : DV6C TURBO DIESEL

FOR : 1PTC - B0FBM : DV6C TURBO DIESEL

FOR : 1PT7 - B0FBM : DV6C TURBO DIESEL

FOR : 1PW2 - B0FBM : DV6C TURBO DIESEL

FOR : 1PIA - B0FBM : DV6C TURBO DIESEL

FOR : 1CMJ - B0FBM : DV6C TURBO DIESEL

FOR : 1PMJ - B0FBM : DV6C TURBO DIESEL

Engine ECU CONTINENTAL SID 807 branch 2	
Fault code	P2427
After sales description of the fault code	Control of the Bypass of the EGR exchanger : Short circuit to positive
Description of the diagnostics	Electrical fault detected for 200 ms
Conditions of activation of the diagnostics	engine running
Conditions of disappearance of the fault	Driving for 5 minutes
Down-grade modes if fault present	-
Switching on of the warning lamp and/or warning message	-

Main customer complaints likely	-
Suspect areas	EGR exchanger bypass
	EGR exchanger bypass control solenoid valve
	Fuse
	Electrical harnesses
	Connectors

Fault code(s): P2425 or P2426 or P2427

Remember DTC

Be sure DTC is NOT stored before the FLOW CHART phase

DTC on	Alternative text of the DTC	Line	Conditions for fault finding	Downgraded into DTC not stored	Line	Suspected areas Major control steps	The client effect/symptom(s) encountered with the DTC(s)	Fault code(s) to be dealt with before starting to perform this flow chart	Tools required
P2425	EGR's cooler bypass: Open circuit	05			1				
P2426	EGR's cooler bypass: Short circuit to ground	06			2				
P2427	EGR's cooler bypass: Short circuit to positive	07			3				

PRE-CHECK

FLOW CHART: Test procedure

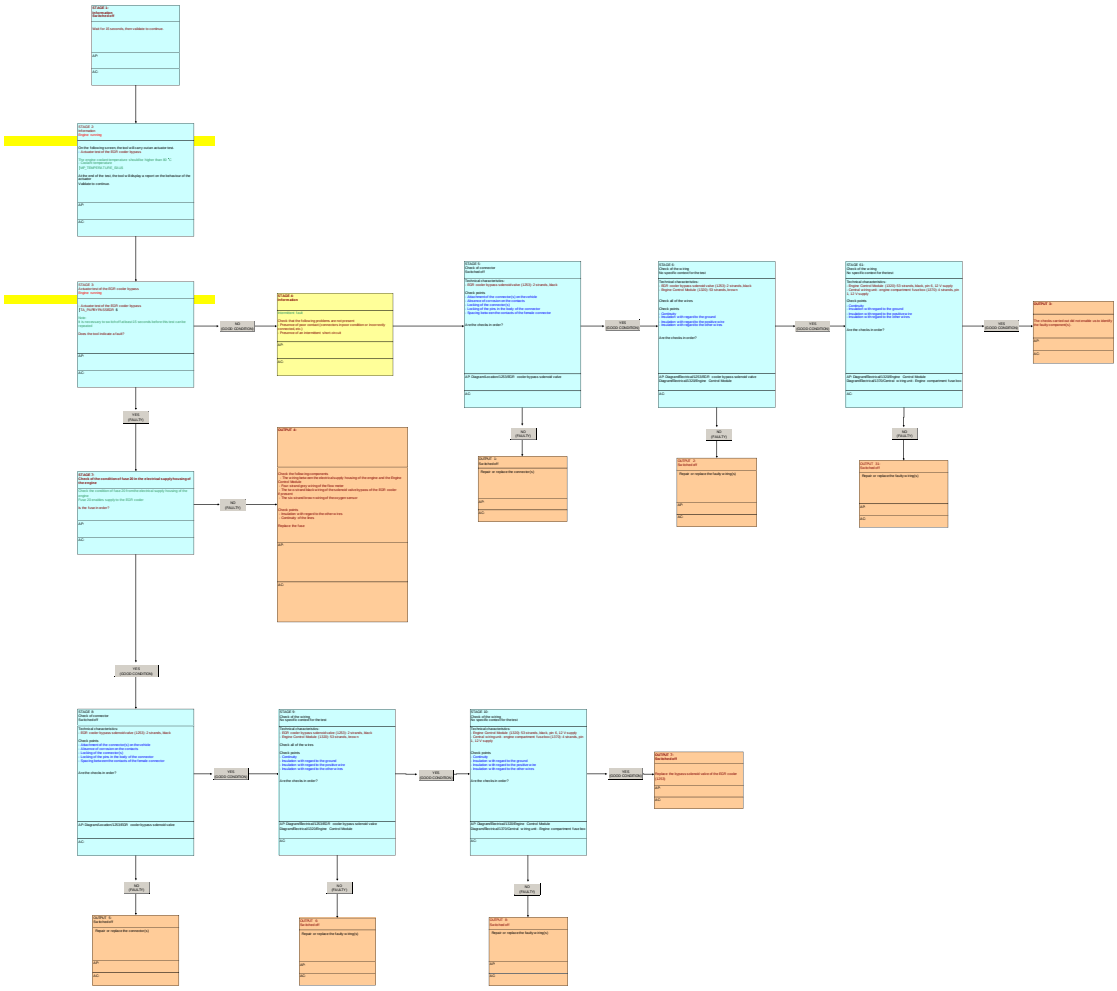

INFORMATION : FAULT CODE P242F (ENGINE ECU)

SPECIAL FEATURE :

FOR : 1CB7 - B0FBM : DV6C TURBO DIESEL

FOR : 1CB8 - B0FBM : DV6C TURBO DIESEL

FOR : 1CXA - B0FBM : DV6C TURBO DIESEL

FOR : 1CX7 - B0FBM : DV6C TURBO DIESEL

FOR : 1CYA - B0FBM : DV6C TURBO DIESEL

FOR : 1C58 - B0FBM : DV6C TURBO DIESEL

FOR : 1PIA - B0FBM : DV6C TURBO DIESEL

FOR : 1PTB - B0FBM : DV6C TURBO DIESEL

FOR : 1PTC - B0FBM : DV6C TURBO DIESEL

FOR : 1PT7 - B0FBM : DV6C TURBO DIESEL

FOR : 1PW2 - B0FBM : DV6C TURBO DIESEL

FOR : 1CMJ - B0FBM : DV6C TURBO DIESEL

FOR : 1PMJ - B0FBM : DV6C TURBO DIESEL

Engine ECU CONTINENTAL SID 807 branch 2	
Fault code	P242F
After sales description of the fault code	Particle filter : Detected clogged
Description of the diagnostics	Possibility 1 For a volume flow passing through the particle filter of 300000 l/h, the differential pressure is greater than 360 mbar for 3 s
	Possibility 2 For a volume flow passing through the particle filter of 800000 l/h, the differential pressure is greater than 620 mbar for 3 s
	Possibility 3 For a volume flow passing through the particle filter of 1200000 l/h, the differential pressure is greater than 740

	mbar for 3 s
Conditions of activation of the diagnostics	The following conditions have to be met - Flow volume traversing the particle filter greater than 160000 l/h - Engine running without regeneration of the particle emission filter for 5 min
Conditions of disappearance of the fault	Driving for 5 minutes
Down-grade modes if fault present	Closing of the EGR (exhaust gas recycling) valve
	Irreversible deactivation of the vehicle speed limiter
	Irreversible deactivation of the vehicle cruise control
	Switching to fuel "normal reduced flow" mode
	Switching of the turbocharging pressure regulation to controlled mode
	Deactivation of the request for regeneration of the particle filter from the diagnostic tool
	Deactivation of taking account of the tight spot information
	Sending of the information "torque uncertain" on the CAN network
Switching on of the warning lamp and/or warning message	Warning lamp MIL
	"SERVICE" warning lamp
Main customer complaints likely	Jerking/stalling
	Starting problem
	Lack of power
	Absence of automatic stopping of the internal combustion engine (Vehicle equipped with "stop and start")
Suspect areas	Particle emission filter clogged or over-loaded
	Tappings for the differential pressure sensor of the particle emission filter

Fault code(s): P242F or P1490

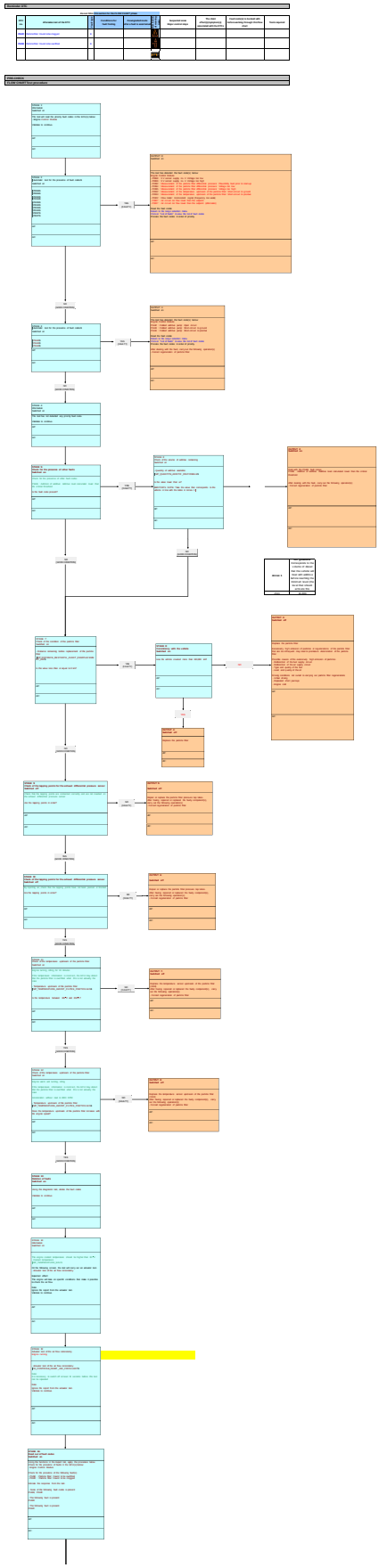

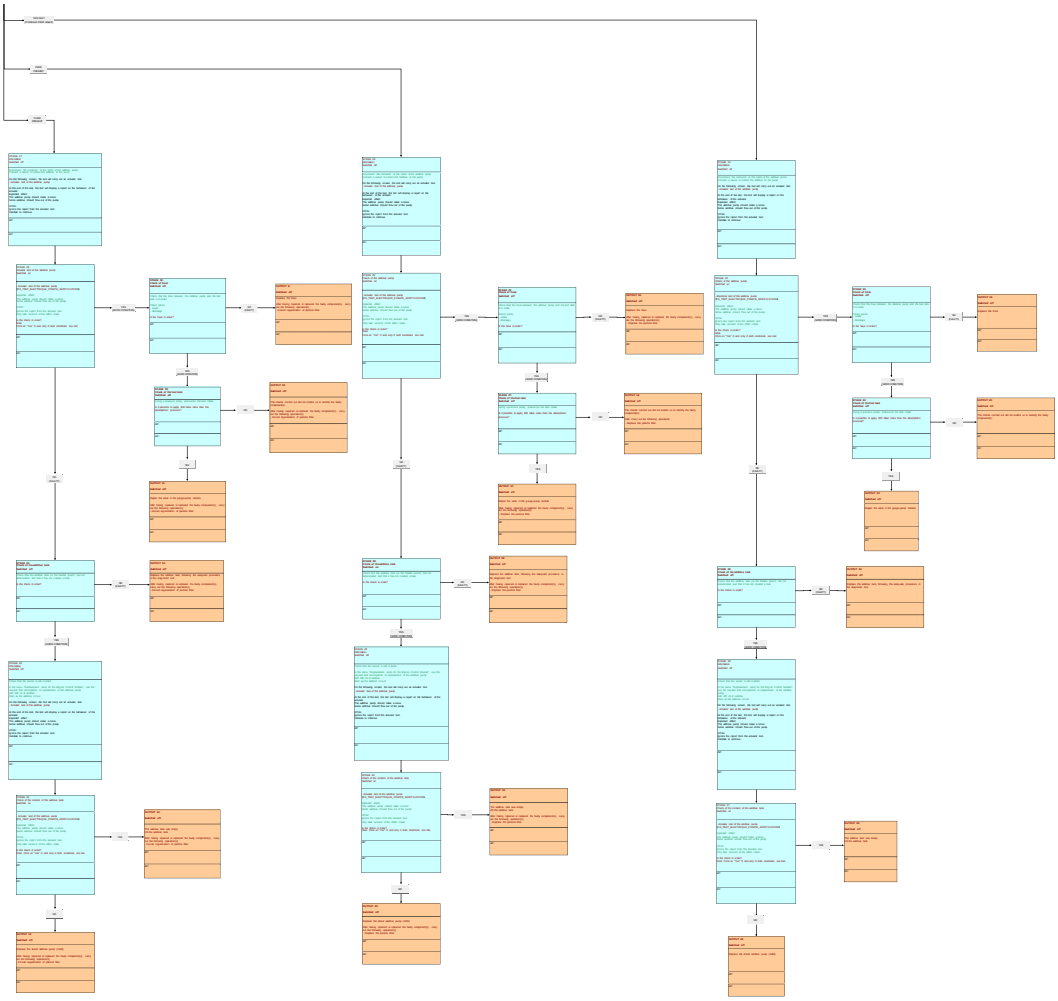

INFORMATION : FAULT CODE P2452 (ENGINE ECU)

SPECIAL FEATURE :

FOR : 1CB7 - B0FBM : DV6C TURBO DIESEL

FOR : 1CB8 - B0FBM : DV6C TURBO DIESEL

FOR : 1CXA - B0FBM : DV6C TURBO DIESEL

FOR : 1CX7 - B0FBM : DV6C TURBO DIESEL

FOR : 1CYA - B0FBM : DV6C TURBO DIESEL

FOR : 1C58 - B0FBM : DV6C TURBO DIESEL

FOR : 1PTB - B0FBM : DV6C TURBO DIESEL

FOR : 1PTC - B0FBM : DV6C TURBO DIESEL

FOR : 1PT7 - B0FBM : DV6C TURBO DIESEL

FOR : 1PW2 - B0FBM : DV6C TURBO DIESEL

FOR : 1PIA - B0FBM : DV6C TURBO DIESEL

FOR : 1CMJ - B0FBM : DV6C TURBO DIESEL

FOR : 1PMJ - B0FBM : DV6C TURBO DIESEL

Engine ECU CONTINENTAL SID 807 branch 2	
Fault code	P2452
After sales description of the fault code	Measurement of the particle emission filter differential pressure : Plausibility before starting fault
Description of the diagnostics	Differential pressure at the terminals of the particle emission filter higher than 20 mbars for 1 seconds before starting
Conditions of activation of the diagnostics	Ignition switched on
Conditions of disappearance of the fault	Maintaining under ignition for a few seconds before starting
Down-grade modes if fault present	Deactivation of the request for regeneration of the particle filter from the diagnostic tool
Switching on of the warning lamp and/or warning	Warning lamp MIL

message	
Main customer complaints likely	No effects immediately perceptible to the customer
	Absence of automatic stopping of the internal combustion engine (Vehicle equipped with "stop and start")
Suspect areas	Particle filter differential pressure sensor
	Electrical harness
	Connectors

Fault code(s): P2452 or P2454 or P2455

Reminder DTC

Do not do all this section for the FLOW CHART phase

DTC no.	Aftersales text of the DTC	Fault type	Conditions for fault finding	Downgraded mode after a fault is ascertained	Driving Safety Warning Light	Suspected areas Major control loops	The client effect(s)/symptom(s) associated with the DTC(s)	Fault code(s) to be dealt with before working through this flow chart	Tools required
P2452	Particle filter differential pressure sensor: Plausibility fault in the differential pressure at start-up	11							
P2454	Particle filter differential pressure sensor: Voltage too low	1F							
P2455	Particle filter differential pressure sensor: Voltage too high	1G							

PRE-CHECK
FLOW CHART Test procedure

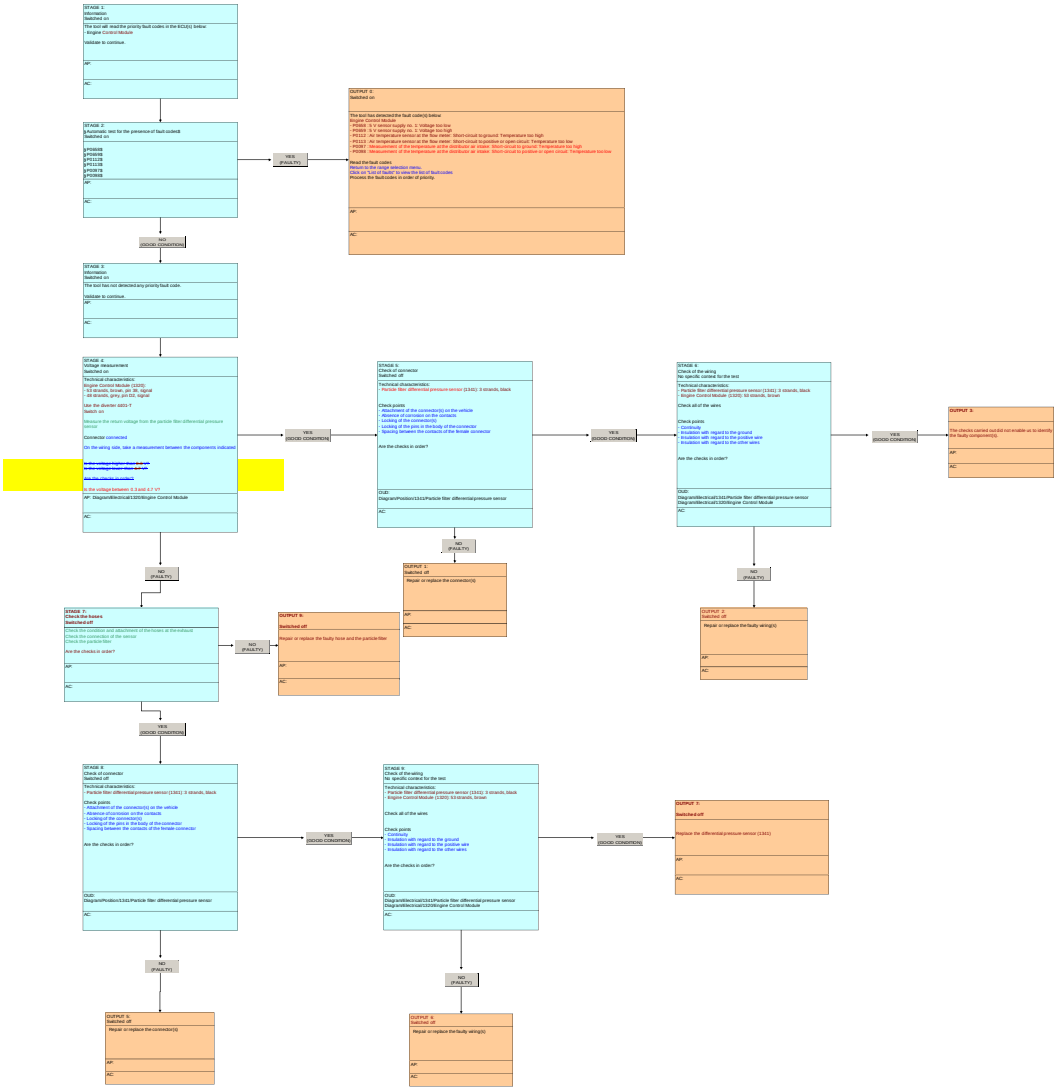

INFORMATION : FAULT CODE P2454 (ENGINE ECU)

SPECIAL FEATURE :

FOR : 1CB7 - B0FBM : DV6C TURBO DIESEL

FOR : 1CB8 - B0FBM : DV6C TURBO DIESEL

FOR : 1CXA - B0FBM : DV6C TURBO DIESEL

FOR : 1CX7 - B0FBM : DV6C TURBO DIESEL

FOR : 1CYA - B0FBM : DV6C TURBO DIESEL

FOR : 1C58 - B0FBM : DV6C TURBO DIESEL

FOR : 1PIA - B0FBM : DV6C TURBO DIESEL

FOR : 1PTB - B0FBM : DV6C TURBO DIESEL

FOR : 1PTC - B0FBM : DV6C TURBO DIESEL

FOR : 1PT7 - B0FBM : DV6C TURBO DIESEL

FOR : 1PW2 - B0FBM : DV6C TURBO DIESEL

FOR : 1CMJ - B0FBM : DV6C TURBO DIESEL

FOR : 1PMJ - B0FBM : DV6C TURBO DIESEL

Engine ECU CONTINENTAL SID 807 branch 2	
Fault code	P2454
After sales description of the fault code	Measurement of the particle emission filter differential pressure : Voltage too low
Description of the diagnostics	Voltage less than 0,3 V for 500 ms
Conditions of activation of the diagnostics	engine running
Conditions of disappearance of the fault	Driving for 5 minutes
Down-grade modes if fault present	Deactivation of the request for regeneration of the particle filter from the diagnostic tool
Switching on of the warning lamp and/or warning message	Warning lamp MIL

Main customer complaints likely	No effects immediately perceptible to the customer
	Absence of automatic stopping of the internal combustion engine (Vehicle equipped with "stop and start")
Suspect areas	Particle filter differential pressure sensor
	Electrical harness
	Connectors

Fault code(s): P2452 or P2454 or P2455

Reminder DTC

Do not fill in this section for the FLOW CHART phase

DTC no.	Aftersales text of the DTC	Fault type	Conditions for fault finding	Downgraded mode after a fault is ascertained	Driving Safety Warning Light	Suspected areas Major control steps	The client effect(s)/symptom(s) associated with the DTC(s)	Fault code(s) to be dealt with before working through this flow chart	Tools required
P2452	Particle filter differential pressure sensor: Plausibility fault in the differential pressure at start-up	11							
P2454	Particle filter differential pressure sensor: Voltage too low	1F							
P2455	Particle filter differential pressure sensor: Voltage too high	1G							

PRE-CHECK
FLOW CHART Test procedure

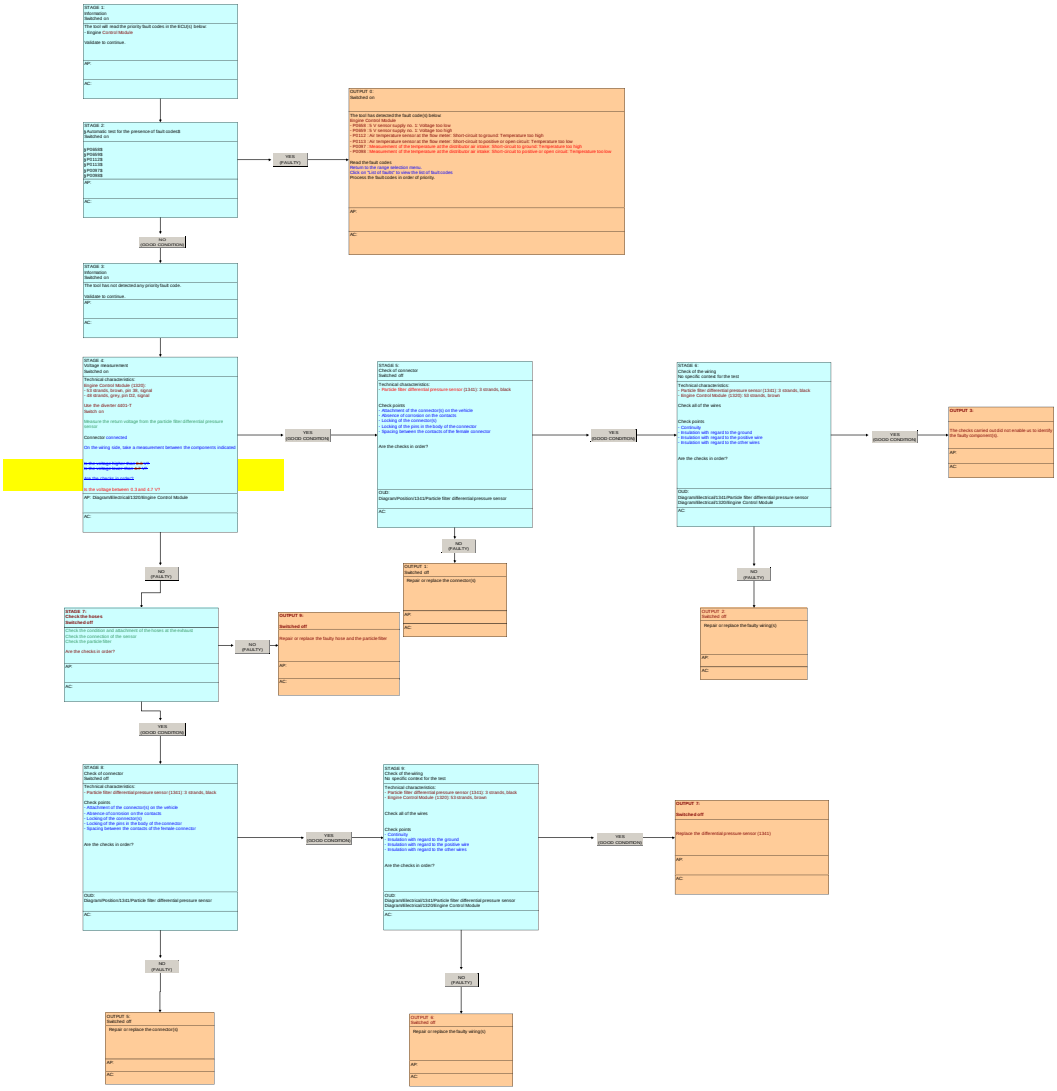

INFORMATION : FAULT CODE P2455 (ENGINE ECU)

SPECIAL FEATURE :

FOR : 1PIA - B0FBM : DV6C TURBO DIESEL

FOR : 1CB7 - B0FBM : DV6C TURBO DIESEL

FOR : 1CB8 - B0FBM : DV6C TURBO DIESEL

FOR : 1CXA - B0FBM : DV6C TURBO DIESEL

FOR : 1CX7 - B0FBM : DV6C TURBO DIESEL

FOR : 1CYA - B0FBM : DV6C TURBO DIESEL

FOR : 1C58 - B0FBM : DV6C TURBO DIESEL

FOR : 1PTC - B0FBM : DV6C TURBO DIESEL

FOR : 1PT7 - B0FBM : DV6C TURBO DIESEL

FOR : 1PW2 - B0FBM : DV6C TURBO DIESEL

FOR : 1PTB - B0FBM : DV6C TURBO DIESEL

FOR : 1CMJ - B0FBM : DV6C TURBO DIESEL

FOR : 1PMJ - B0FBM : DV6C TURBO DIESEL

Engine ECU CONTINENTAL SID 807 branch 2	
Fault code	P2455
After sales description of the fault code	Measurement of the particle emission filter differential pressure : Voltage too high
Description of the diagnostics	Voltage higher than 4,7 V for 500 ms
Conditions of activation of the diagnostics	engine running
Conditions of disappearance of the fault	Driving for 5 minutes
Down-grade modes if fault present	Deactivation of the request for regeneration of the particle filter from the diagnostic tool
Switching on of the warning lamp and/or warning message	Warning lamp MIL
Main customer	No effects immediately perceptible to the customer
	Absence of automatic stopping of the internal

complaints likely	combustion engine (Vehicle equipped with "stop and start")
Suspect areas	Particle filter differential pressure sensor
	Electrical harness
	Connectors

Fault code(s): P2452 or P2454 or P2455

Reminder DTC

Do not do all this section for the FLOW CHART phase

DTC no.	Aftersales text of the DTC	Fault type	Conditions for fault finding	Downgraded mode after a fault is ascertained	Driving Safety Warning Light	Suspected areas Major control steps	The client effect(s)/symptom(s) associated with the DTC(s)	Fault code(s) to be dealt with before working through this flow chart	Tools required
P2452	Particle filter differential pressure sensor: Plausibility fault in the differential pressure at start-up	11							
P2454	Particle filter differential pressure sensor: Voltage too low	1F							
P2455	Particle filter differential pressure sensor: Voltage too high	1G							

PRE-CHECK

FLOW CHART Test procedure

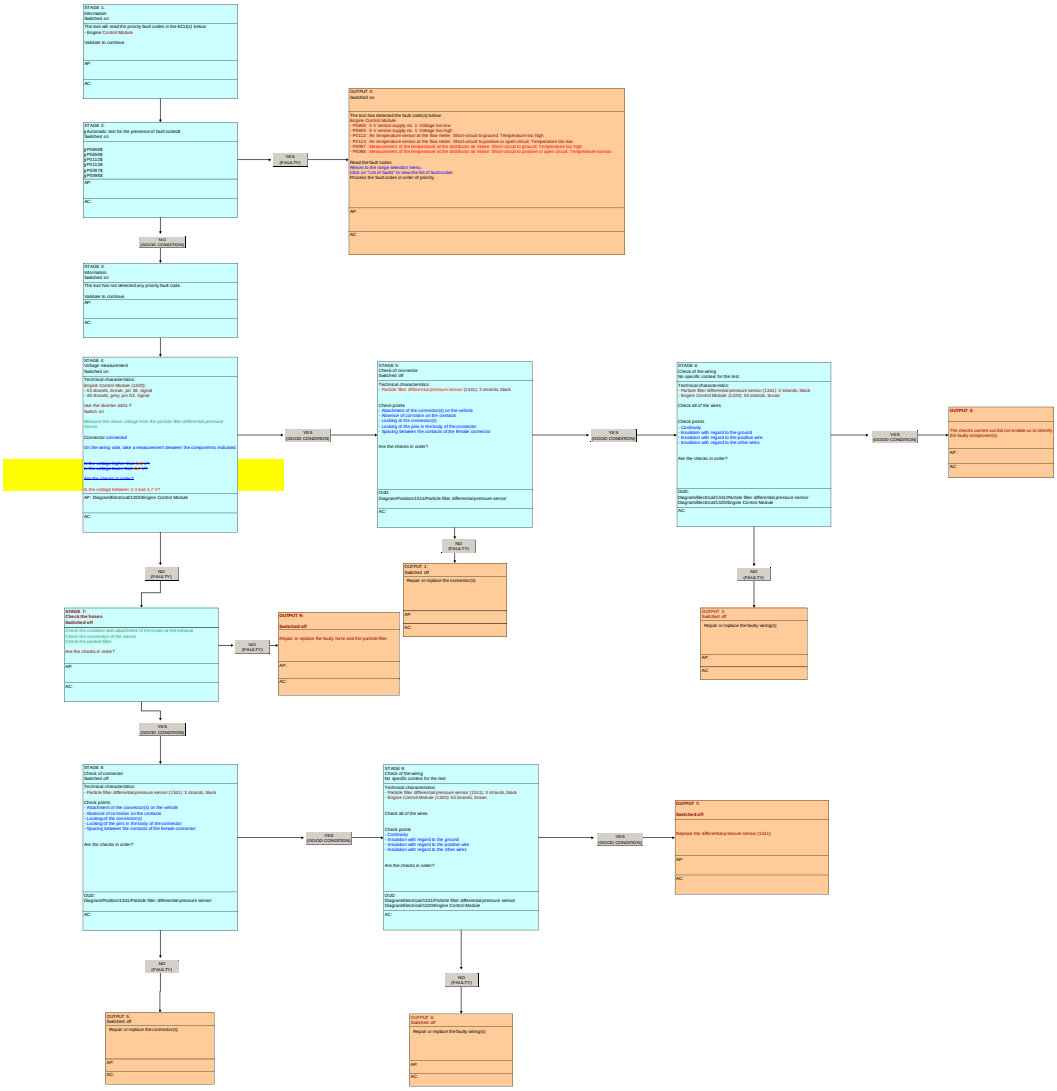

INFORMATION : FAULT CODE P2562 (ENGINE ECU)

SPECIAL FEATURE :

FOR : 1CB7 - B0FBM : DV6C TURBO DIESEL

FOR : 1CX7 - B0FBM : DV6C TURBO DIESEL

FOR : 1C58 - B0FBM : DV6C TURBO DIESEL

FOR : 1PT7 - B0FBM : DV6C TURBO DIESEL

FOR : 1PW2 - B0FBM : DV6C TURBO DIESEL

FOR : 1CB8 - B0FBM : DV6C TURBO DIESEL

FOR : 1CXA - B0FBM : DV6C TURBO DIESEL

FOR : 1CYA - B0FBM : DV6C TURBO DIESEL

FOR : 1PTB - B0FBM : DV6C TURBO DIESEL

FOR : 1PTC - B0FBM : DV6C TURBO DIESEL

FOR : 1PIA - B0FBM : DV6C TURBO DIESEL

FOR : 1CMJ - B0FBM : DV6C TURBO DIESEL

FOR : 1PMJ - B0FBM : DV6C TURBO DIESEL

Engine ECU CONTINENTAL SID 807 branch 2	
Fault code	P2562
After sales description of the fault code	turbocharger : Position incorrect relative to requirement, not enough turbo
Description of the diagnostics	The position measured is greater than the reference by more than 30 % for 5 seconds
Conditions of activation of the diagnostics	Engine running for more than 30 seconds and engine speed higher than 1500 rpm
Conditions of disappearance of the fault	Driving for 5 minutes
Down-grade modes if fault present	Closing of the EGR (exhaust gas recycling) valve
	Switching of the turbocharging pressure regulation to controlled mode
	Sending of the information "torque uncertain" on the CAN network
Switching on of the warning lamp and/or	Warning lamp MIL

warning message	
Main customer complaints likely	Noise
	Smoke from the exhaust
	Lack of power
	Loss of braking
Suspect areas	turbocharger
	Turbocharger variable geometry control solenoid valve
	Turbocharger variable geometry position repeat sensor
	Exchanger of the exhaust gas recycling valve with bypass
	EGR exchanger bypass control solenoid valve
	vacuum pump
	Electrical harnesses
	Connectors
	Air leak on vacuum circuit

Fault code(s): P2562 or P1497



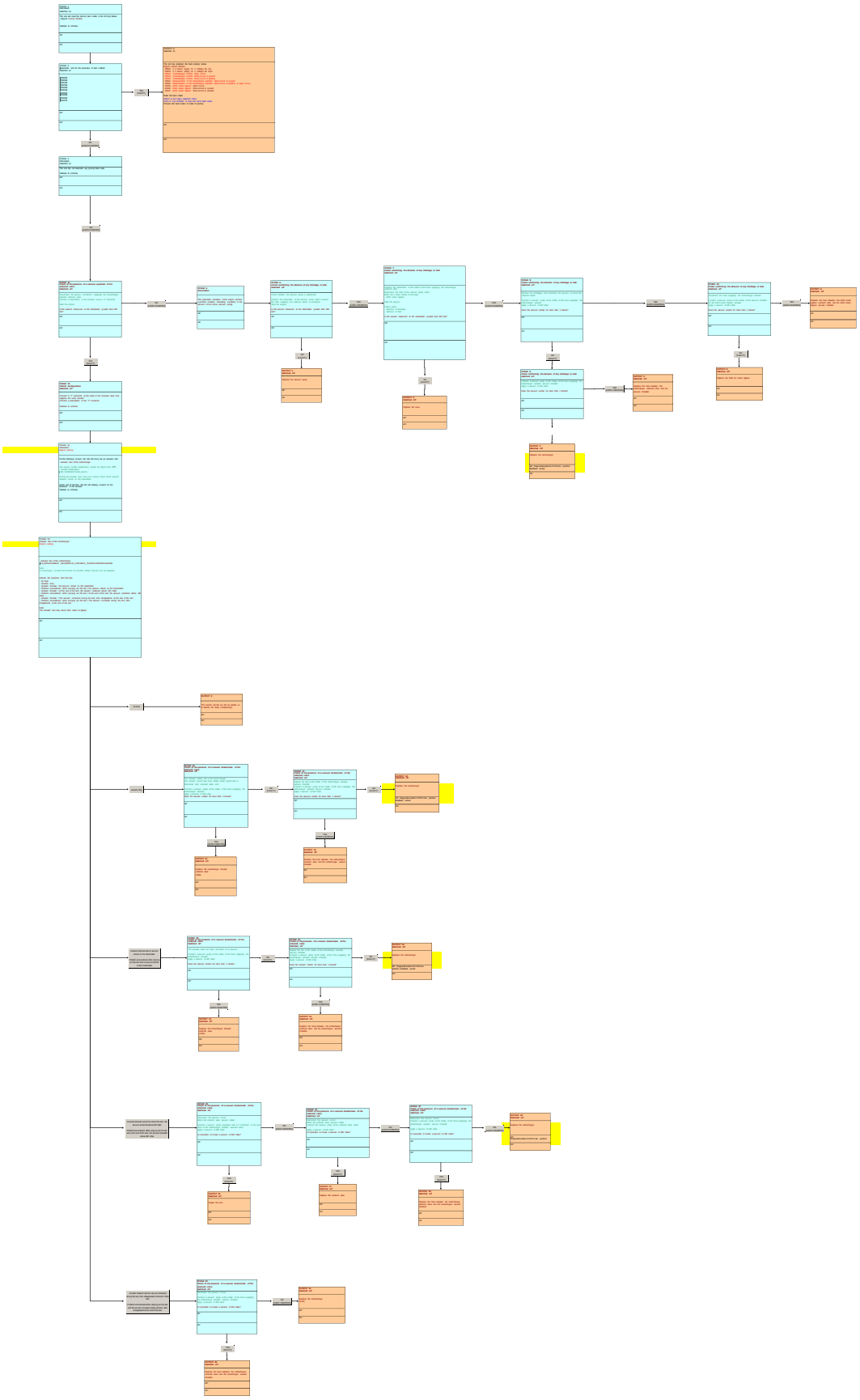

INFORMATION : FAULT CODE P2563 (ENGINE ECU)

SPECIAL FEATURE :

FOR : 1CMJ - B0FBM : DV6C TURBO DIESEL

FOR : 1PMJ - B0FBM : DV6C TURBO DIESEL

Engine ECU CONTINENTAL SID 807 branch 2	
Fault code	P2563
After sales description of the fault code	Turbocharger : Position incorrect in relation to the setting, too much turbo
Description of the diagnostics	The position measured is less than the reference by more than 20 % for 5 seconds
Conditions of activation of the diagnostics	Engine running for more than 30 seconds and engine speed higher than 1500 rpm
Conditions of disappearance of the fault	Driving for 5 minutes
Down-grade modes if fault present	Closing of the EGR (exhaust gas recycling) valve
	Switching of the turbocharging pressure regulation to controlled mode
	Sending of the information "torque uncertain" on the CAN network
	Switching to fuel "normal reduced flow" mode
Switching on of the warning lamp and/or warning message	Warning lamp MIL
	"SERVICE" warning lamp
Main customer complaints likely	Noise
	Slightly higher fuel consumption
Suspect areas	Turbocharger
	Turbocharger variable geometry control solenoid valve
	Variable geometry turbocharger position repeat sensor
	Electrical harnesses
	Connectors
	Clogging of the vacuum circuit

Fault code(s): P2563 or P1496



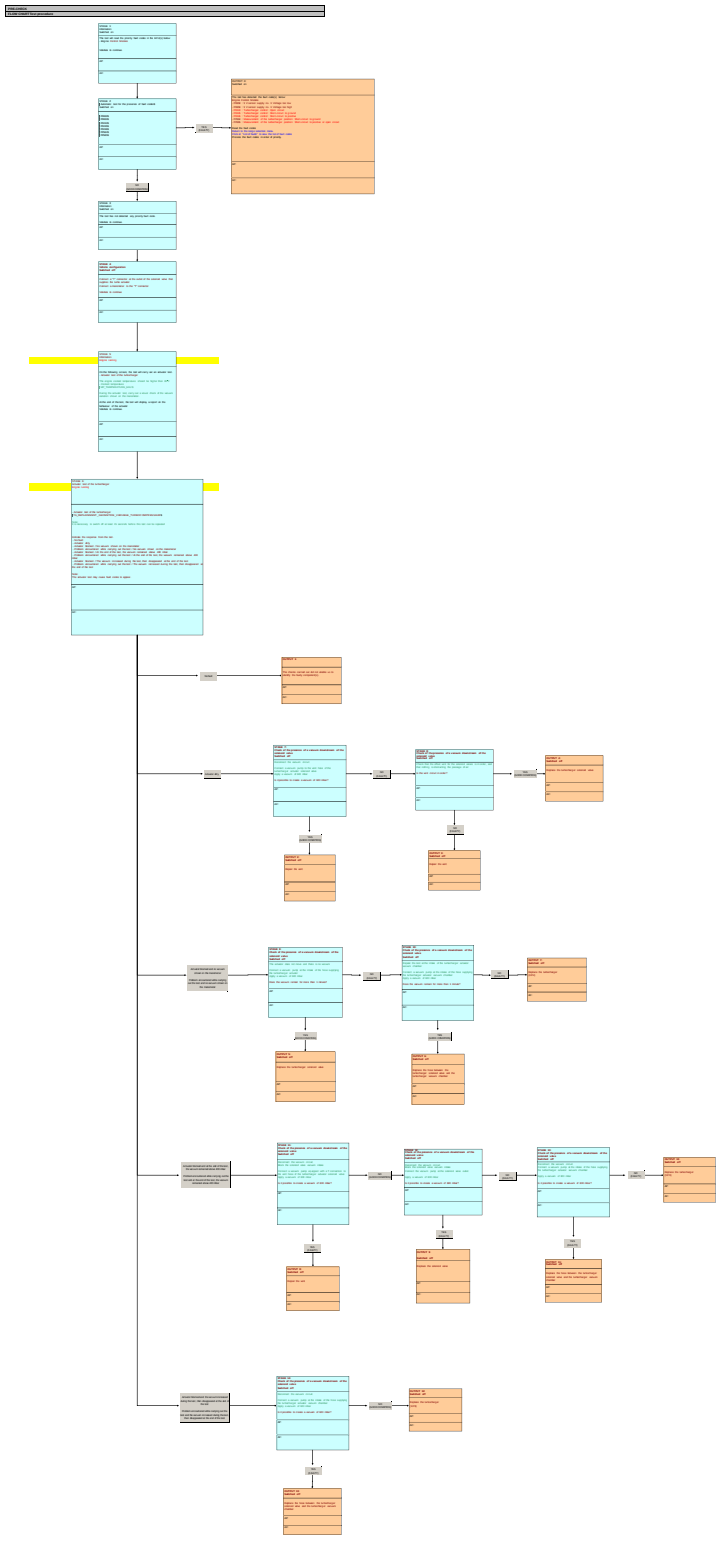

INFORMATION : FAULT CODE P2564 (ENGINE ECU)

SPECIAL FEATURE :

FOR : 1CB7 - B0FBM : DV6C TURBO DIESEL

FOR : 1CX7 - B0FBM : DV6C TURBO DIESEL

FOR : 1C58 - B0FBM : DV6C TURBO DIESEL

FOR : 1PT7 - B0FBM : DV6C TURBO DIESEL

FOR : 1PW2 - B0FBM : DV6C TURBO DIESEL

FOR : 1CB8 - B0FBM : DV6C TURBO DIESEL

FOR : 1CXA - B0FBM : DV6C TURBO DIESEL

FOR : 1CYA - B0FBM : DV6C TURBO DIESEL

FOR : 1PTB - B0FBM : DV6C TURBO DIESEL

FOR : 1PTC - B0FBM : DV6C TURBO DIESEL

FOR : 1PIA - B0FBM : DV6C TURBO DIESEL

FOR : 1CMJ - B0FBM : DV6C TURBO DIESEL

FOR : 1PMJ - B0FBM : DV6C TURBO DIESEL

Engine ECU CONTINENTAL SID 807 branch 2	
Fault code	P2564
After sales description of the fault code	Variable geometry turbocharger position measurement : Short circuit to earth
Description of the diagnostics	Voltage less than 0,2 V for 500 ms
Conditions of activation of the diagnostics	Engine running
Conditions of disappearance of the fault	Driving for 5 minutes
Down-grade modes	Closing of the EGR (exhaust gas recycling) valve
	Irreversible deactivation of the vehicle speed limiter
	Irreversible deactivation of the vehicle cruise control
	Switching of the turbocharging pressure regulation to controlled mode
	Maximum opening of the turbocharger geometry

if fault present	Deactivation of the "easy-move" (electric parking brake) functionality
	For a gearbox with engine speed regulation (automatic gearbox or piloted manual gearbox), limitation of the torque sent to the gearbox
Switching on of the warning lamp and/or warning message	Warning lamp MIL
Main customer complaints likely	Noise
Suspect areas	Turbocharger
	Variable geometry turbocharger position repeat sensor
	Electrical harness
	Connectors

Fault code(s): P2564 or P2565

Reminder DTC

Do not fill in this section for the FLOW CHART phase

DTC no.	Alternates text of the DTC	Fault type	Conditions for fault finding	Downgraded mode after a fault is ascertained	Driver alert lamp (if any)	Suspected areas Major control steps	The client effect(s)/symptom(s) associated with the DTC(s)	Fault code(s) to be dealt with before working through this flow chart	Tools required
P2564	Turbocharger actuator position sensor: Short-circuit to ground	Hd							
P2565	Turbocharger actuator position sensor: Short-circuit to positive or open circuit	Hd							

PRE-CHECK

FLOW CHART Test procedure

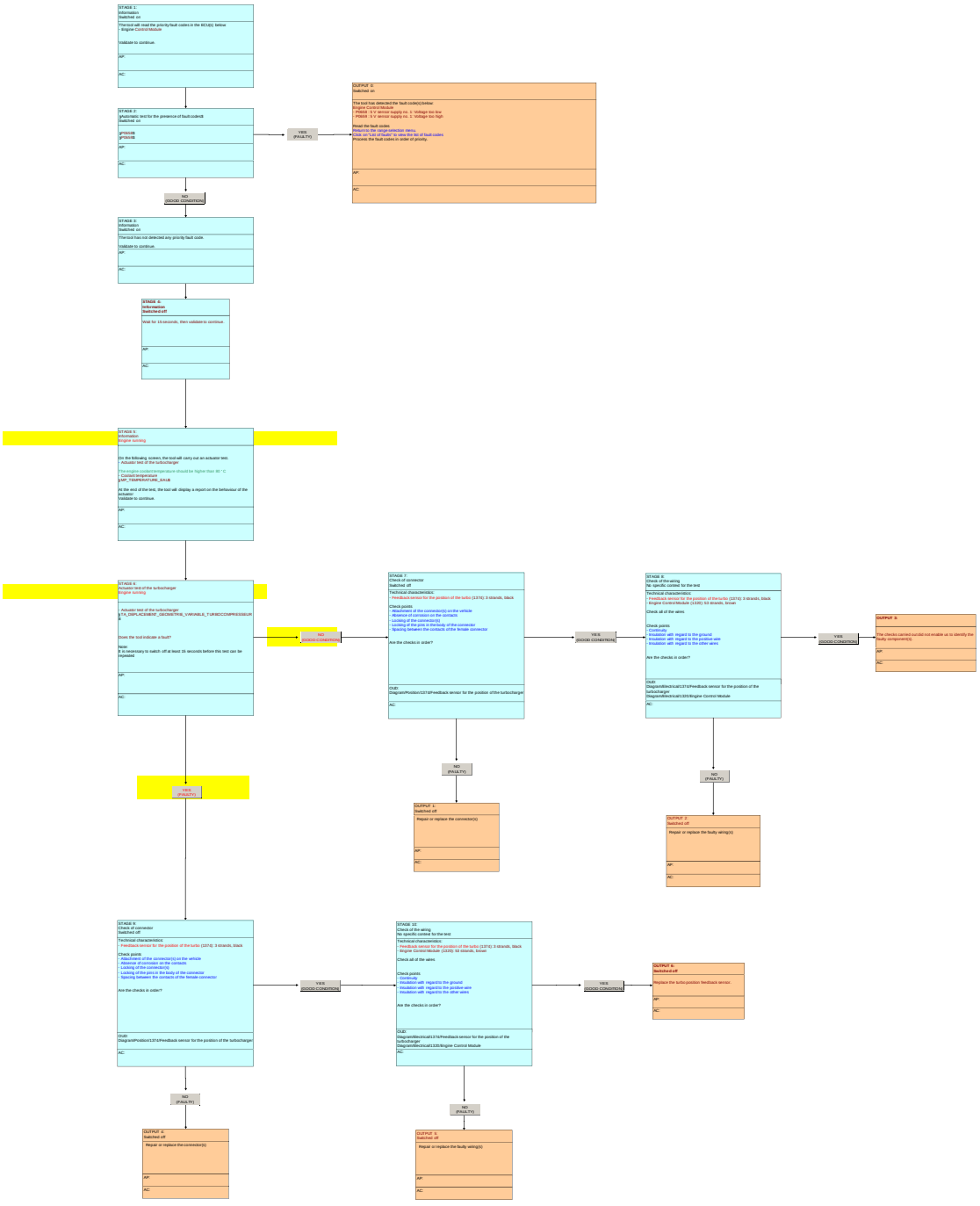

INFORMATION : FAULT CODE P2565 (ENGINE ECU)

SPECIAL FEATURE :

FOR : 1CB7 - B0FBM : DV6C TURBO DIESEL

FOR : 1CX7 - B0FBM : DV6C TURBO DIESEL

FOR : 1C58 - B0FBM : DV6C TURBO DIESEL

FOR : 1PT7 - B0FBM : DV6C TURBO DIESEL

FOR : 1PW2 - B0FBM : DV6C TURBO DIESEL

FOR : 1CB8 - B0FBM : DV6C TURBO DIESEL

FOR : 1CXA - B0FBM : DV6C TURBO DIESEL

FOR : 1CYA - B0FBM : DV6C TURBO DIESEL

FOR : 1PTB - B0FBM : DV6C TURBO DIESEL

FOR : 1PTC - B0FBM : DV6C TURBO DIESEL

FOR : 1PIA - B0FBM : DV6C TURBO DIESEL

FOR : 1CMJ - B0FBM : DV6C TURBO DIESEL

FOR : 1PMJ - B0FBM : DV6C TURBO DIESEL

Engine ECU CONTINENTAL SID 807 branch 2	
Fault code	P2565
After sales description of the fault code	Measurement of the position of the turbocharger : Short circuit to positive or open circuit
Description of the diagnostics	Voltage higher than 4,8 V for 500 ms
Conditions of activation of the diagnostics	Engine running
Conditions of disappearance of the fault	Driving for 5 minutes
Down-grade modes	Closing of the EGR (exhaust gas recycling) valve
	Maximum opening of the turbocharger geometry
	Switching of the turbocharging pressure regulation to controlled mode
	Deactivation of the "easy-move" (electric parking brake) functionality

if fault present	Irreversible deactivation of the vehicle speed limiter
	Irreversible deactivation of the vehicle cruise control
	For a gearbox with engine speed regulation (automatic gearbox or piloted manual gearbox), limitation of the torque sent to the gearbox
Switching on of the warning lamp and/or warning message	Warning lamp MIL
Main customer complaints likely	Noise
Suspect areas	Turbocharger
	Variable geometry turbocharger position repeat sensor
	Electrical harness
	Connectors

Fault code(s): P2564 or P2565

Reminder DTC

Do not fill in this section for the FLOW CHART phase

DTC no.	Alternates text of the DTC	Fault type	Conditions for fault finding	Downgraded mode after a fault is ascertained	Driver alert lamp (if any)	Suspected areas Major control steps	The client effect(s)/symptom(s) associated with the DTC(s)	Fault code(s) to be dealt with before working through this flow chart	Tools required
P2564	Turbocharger actuator position sensor: Short-circuit to ground	Hd							
P2565	Turbocharger actuator position sensor: Short-circuit to positive or open circuit	Hd							

PRE-CHECK

FLOW CHART Test procedure

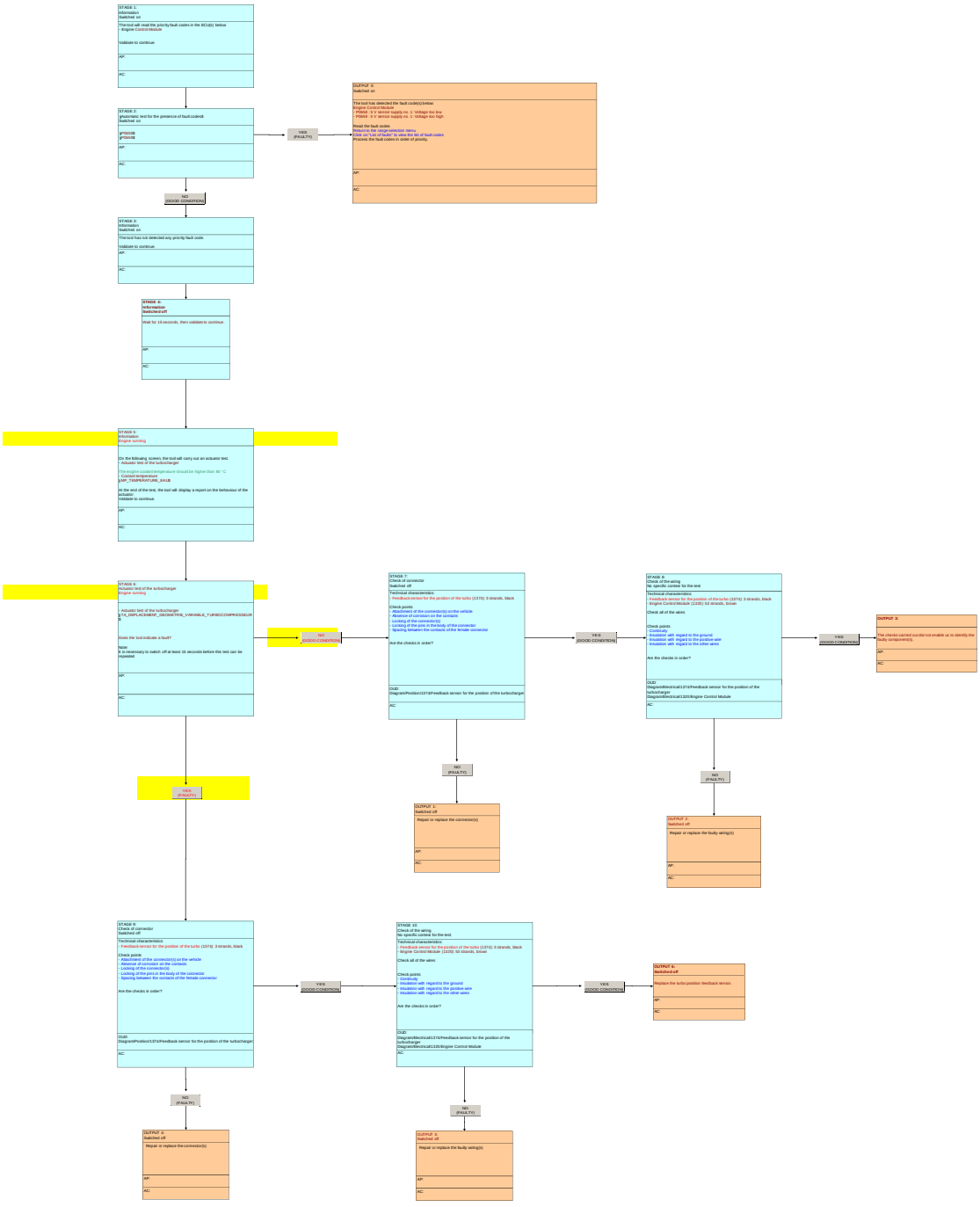

INFORMATION : FAULT CODE P2670 (ENGINE ECU)

SPECIAL FEATURE :

FOR : 1CMJ - B0FBM : DV6C TURBO DIESEL

FOR : 1PMJ - B0FBM : DV6C TURBO DIESEL

Engine ECU CONTINENTAL SID 807 branch 2	
Fault code	P2670
After sales description of the fault code	5V sensor supply no. 2 (Accelerator pedal sensor) : Voltage too low
Description of the diagnostics	Voltage less than 4,8 V for 100 ms
Conditions of activation of the diagnostics	At least one of the following conditions must be fulfilled - Ignition switched on - Engine running
Conditions of disappearance of the fault	Driving for 5 minutes
Down-grade modes if fault present	Closing of the EGR (exhaust gas recycling) valve
	Irreversible deactivation of the vehicle speed limiter
	Irreversible deactivation of the vehicle cruise control
	Irreversible switching of the engine speed regulation to controlled mode
	Deactivation of taking account of the tight spot information
	Switching of the turbocharging pressure regulation to controlled mode
	Sending of the information "torque uncertain" on the CAN network
Switching on of the warning lamp and/or warning message	Warning lamp MIL
Main customer complaints likely	Lack of power
	Noise
	Jerking/stalling
	Absence of automatic stopping of the internal combustion engine (Vehicle equipped with "stop and start")
	Problem with automatic restarting of the internal combustion engine (Vehicle equipped with "stop and start")
	Malfunction of the Stop and Start switch or its LED (Vehicle equipped with "stop and start")
	Engine ECU

Suspect areas	Accelerator pedal
	"point of resistance" switch
	Clutch pedal
	Electrical harnesses
	Connectors

Fault code(s): P2670 or P2671

Reminder DTC

Do not go to this section for the FLOW CHART phase

DTC no.	Alternates text of the DTC	Fault type	Conditions for fault finding	Downgraded mode after a fault is ascertained	Stop vehicle and switch off the engine	Suspected zones Major control steps	The client effect(Symptom(s)) associated with the DTC(s)	Fault code(s) to be dealt with before working through this flow chart	Tools required
P2670	5 V sensor supply no. 2: Voltage too low	00							
P2671	5 V sensor supply no. 2: Voltage too high	00							

PRE-CHECK

FLOW CHART Test procedure

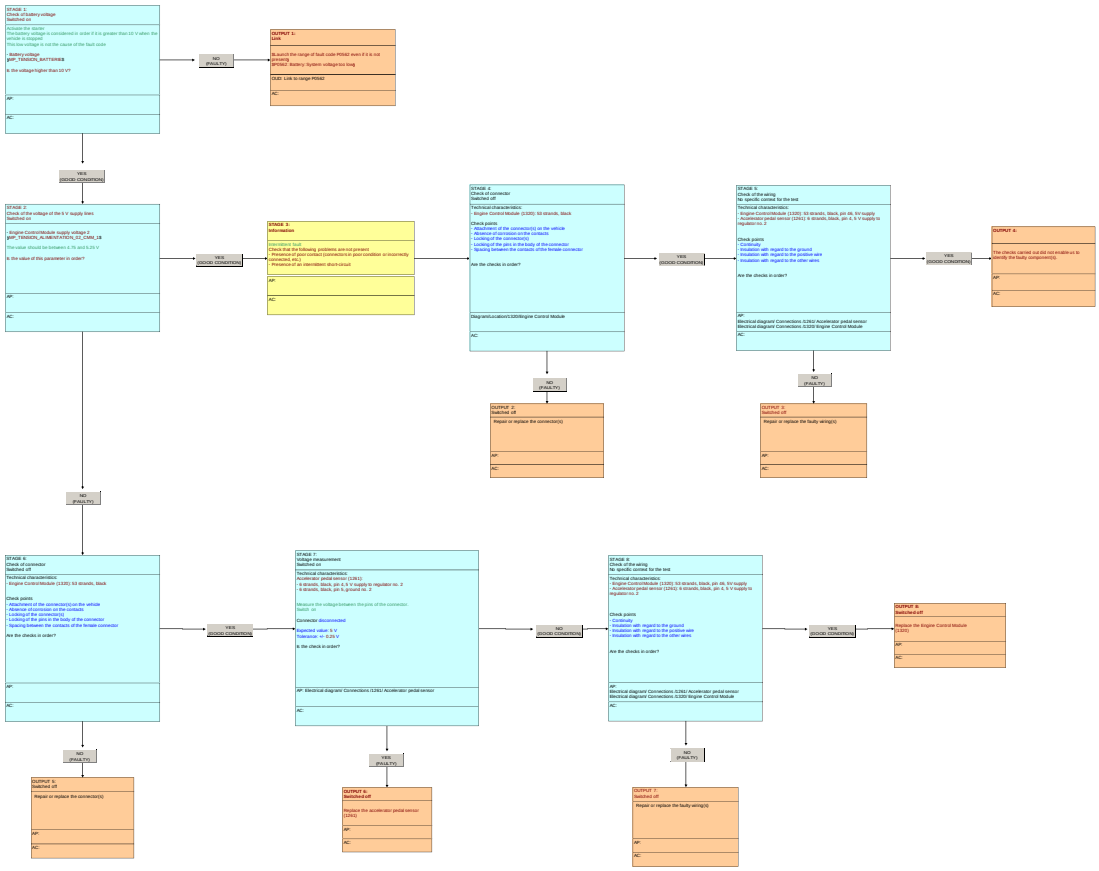

INFORMATION : FAULT CODE P2671 (ENGINE ECU)

SPECIAL FEATURE :

FOR : 1CMJ - B0FBM : DV6C TURBO DIESEL

FOR : 1PMJ - B0FBM : DV6C TURBO DIESEL

Engine ECU CONTINENTAL SID 807 branch 2	
Fault code	P2671
After sales description of the fault code	Supply of sensors 5V no. 2 (Accelerator pedal sensor) : Voltage too high
Description of the diagnostics	Voltage higher than 5,3 V for 100 ms
Conditions of activation of the diagnostics	At least one of the following conditions must be fulfilled - Ignition switched on - Engine running
Conditions of disappearance of the fault	Driving for 5 minutes
Down-grade modes if fault present	Closing of the EGR (exhaust gas recycling) valve
	Irreversible deactivation of the vehicle speed limiter
	Irreversible deactivation of the vehicle cruise control
	Irreversible switching of the engine speed regulation to controlled mode
	Deactivation of taking account of the tight spot information
	Switching of the turbocharging pressure regulation to controlled mode
	Sending of the information "torque uncertain" on the CAN network
Switching on of the warning lamp and/or warning message	Warning lamp MIL
Main customer complaints likely	Lack of power
	Noise
Suspect areas	Engine ECU
	Accelerator pedal
	Electrical harnesses
	"point of resistance" switch
	Clutch pedal
	Connectors

Fault code(s): P2670 or P2671

Reminder DTC

Do not fill in this section for the FLOW CHART phase

DTC no.	Alternates text of the DTC	Fail. type	Conditions for fault finding	Downgraded mode after a fault is ascertained	Stop vehicle / Driver warning lamp	Suspected zones Major control steps	The client effect(Symptom(s)) associated with the DTC(s)	Fault code(s) to be dealt with before working through this flow chart	Tools required
P2670	5 V sensor supply no. 2: Voltage too low	4/4							
P2671	5 V sensor supply no. 2: Voltage too high	3/4							

PRE-CHECK

FLOW CHART Test procedure

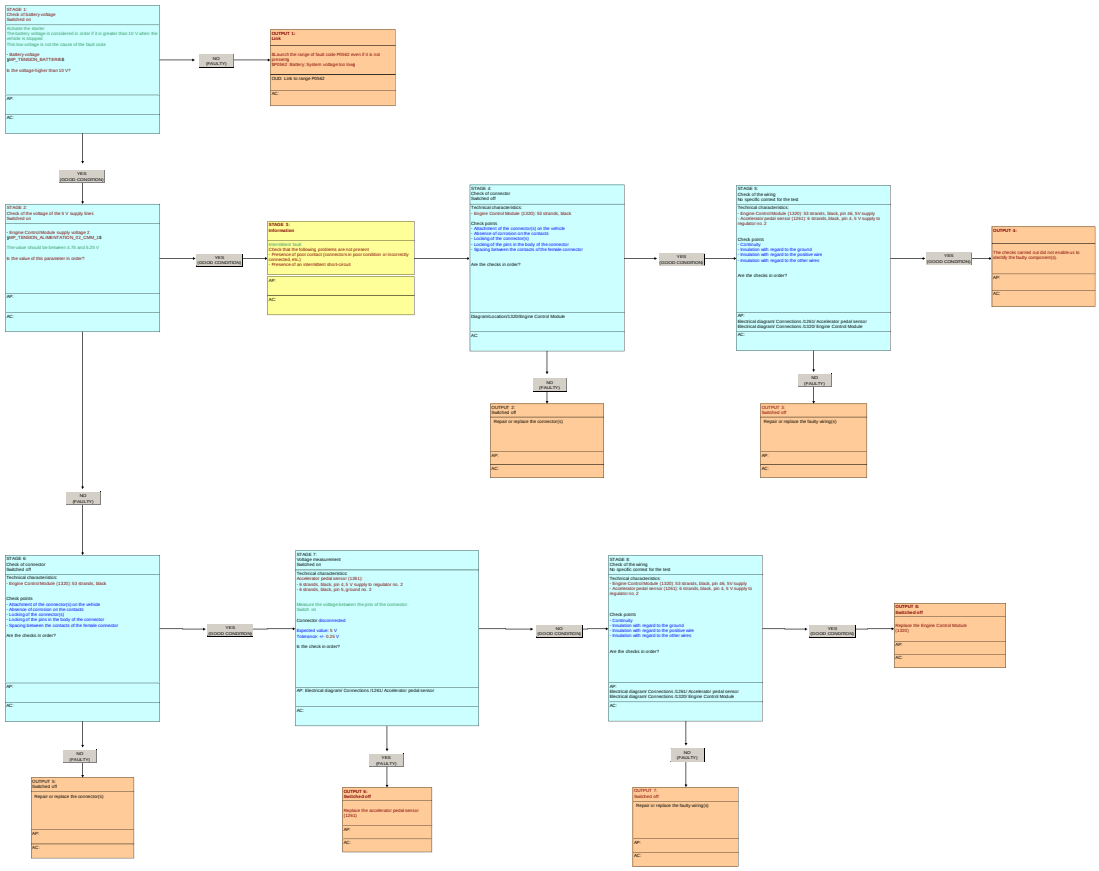

INFORMATION : FAULT CODE P2685 (ENGINE ECU)

SPECIAL FEATURE :

FOR : 1CB7 - B0FBM : DV6C TURBO DIESEL

FOR : 1CX7 - B0FBM : DV6C TURBO DIESEL

FOR : 1C58 - B0FBM : DV6C TURBO DIESEL

FOR : 1PT7 - B0FBM : DV6C TURBO DIESEL

FOR : 1PW2 - B0FBM : DV6C TURBO DIESEL

FOR : 1CB8 - B0FBM : DV6C TURBO DIESEL

FOR : 1CXA - B0FBM : DV6C TURBO DIESEL

FOR : 1CYA - B0FBM : DV6C TURBO DIESEL

FOR : 1PTB - B0FBM : DV6C TURBO DIESEL

FOR : 1PTC - B0FBM : DV6C TURBO DIESEL

FOR : 1PIA - B0FBM : DV6C TURBO DIESEL

FOR : 1CMJ - B0FBM : DV6C TURBO DIESEL

FOR : 1PMJ - B0FBM : DV6C TURBO DIESEL

Engine ECU CONTINENTAL SID 807 branch 2	
Fault code	P2685
After sales description of the fault code	Supply of sensors 5V no. 3 (Engine speed sensor ; Camshaft sensor) : Voltage too low
Description of the diagnostics	Voltage higher than 4,8 V for 100 ms
Conditions of activation of the diagnostics	At least one of the following conditions must be fulfilled - Ignition switched on - Engine running
Conditions of disappearance of the fault	Driving for 5 minutes
Down-grade modes if fault present	Irreversible deactivation of the vehicle speed limiter
	Irreversible deactivation of the vehicle cruise control
	Deactivation of taking account of the tight spot information
	Sending of the information "torque uncertain" on the

	CAN network
Switching on of the warning lamp and/or warning message	Warning lamp MIL
Main customer complaints likely	Starting problem
	Jerking/stalling
	Lack of power
Suspect areas	Engine ECU
	Engine speed sensor
	Camshaft position sensor
	Electrical harnesses
	Connectors

Fault code(s): P2685 or P2686

Reminder DTC

Do not fill in this section for the FLOW CHART phase

DTC no.	Alternates text of the DTC	Fault type	Conditions for fault finding	Downgraded mode after a fault is ascertained	Engine stop if driving	Suspected areas Major control steps	The client effect(Symptom(s)) associated with the DTC(s)	Fault code(s) to be dealt with before working through this flow chart	Tools required
P2685	5 V sensor supply no. 3: Voltage too low	00							
P2686	5 V sensor supply no. 3: Voltage too high	00							

PRE-CHECK

FLOW CHART Test procedure

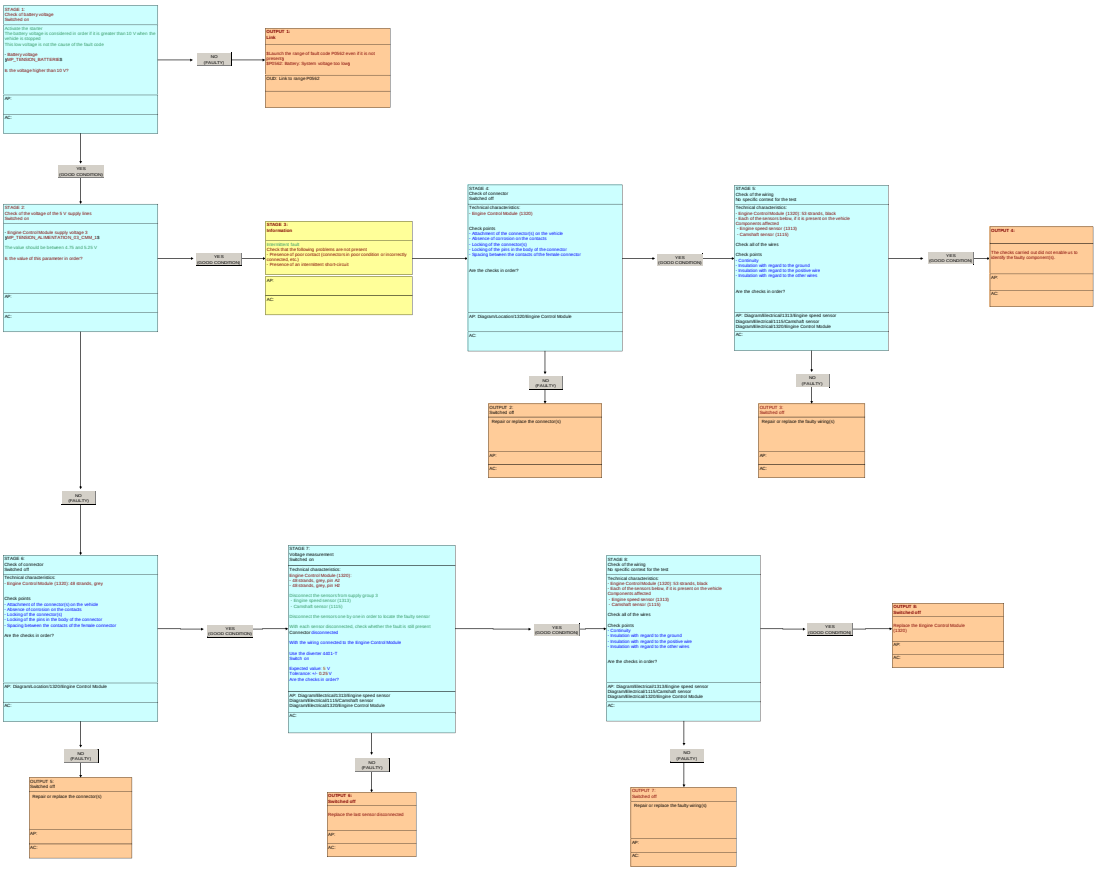

INFORMATION : FAULT CODE P2686 (ENGINE ECU)

SPECIAL FEATURE :

FOR : 1CB7 - B0FBM : DV6C TURBO DIESEL

FOR : 1CX7 - B0FBM : DV6C TURBO DIESEL

FOR : 1C58 - B0FBM : DV6C TURBO DIESEL

FOR : 1PT7 - B0FBM : DV6C TURBO DIESEL

FOR : 1PW2 - B0FBM : DV6C TURBO DIESEL

FOR : 1CB8 - B0FBM : DV6C TURBO DIESEL

FOR : 1CXA - B0FBM : DV6C TURBO DIESEL

FOR : 1CYA - B0FBM : DV6C TURBO DIESEL

FOR : 1PTB - B0FBM : DV6C TURBO DIESEL

FOR : 1PTC - B0FBM : DV6C TURBO DIESEL

FOR : 1PIA - B0FBM : DV6C TURBO DIESEL

FOR : 1CMJ - B0FBM : DV6C TURBO DIESEL

FOR : 1PMJ - B0FBM : DV6C TURBO DIESEL

Engine ECU CONTINENTAL SID 807 branch 2	
Fault code	P2686
After sales description of the fault code	Supply of sensors 5V no. 3 (Engine speed sensor ; Camshaft sensor) : Voltage too high
Description of the diagnostics	Voltage higher than 5,3 V for 100 ms
Conditions of activation of the diagnostics	At least one of the following conditions must be fulfilled - Ignition switched on - Engine running
Conditions of disappearance of the fault	Driving for 5 minutes
Down-grade modes if fault present	Irreversible deactivation of the vehicle speed limiter
	Irreversible deactivation of the vehicle cruise control
	Deactivation of taking account of the tight spot information

	Sending of the information "torque uncertain" on the CAN network
Switching on of the warning lamp and/or warning message	Warning lamp MIL
Main customer complaints likely	Starting problem
	Jerking/stalling
	Lack of power
Suspect areas	Engine ECU
	Engine speed sensor
	Camshaft position sensor
	Electrical harnesses
	Connectors

Fault code(s): P2685 or P2686

Reminder DTC

Do not fill in this section for the FLOW CHART phase

DTC no.	Alternates text of the DTC	Fault type	Conditions for fault finding	Downgraded mode after a fault is ascertained	Driver warning lamp	Suspected areas Major control steps	The client effect(Symptom(s)) associated with the DTC's	Fault code(s) to be dealt with before working through this flow chart	Tools required
P2685	5 V sensor supply no. 3: Voltage too low	00							
P2686	5 V sensor supply no. 3: Voltage too high	00							

PRE-CHECK

FLOW CHART Test procedure

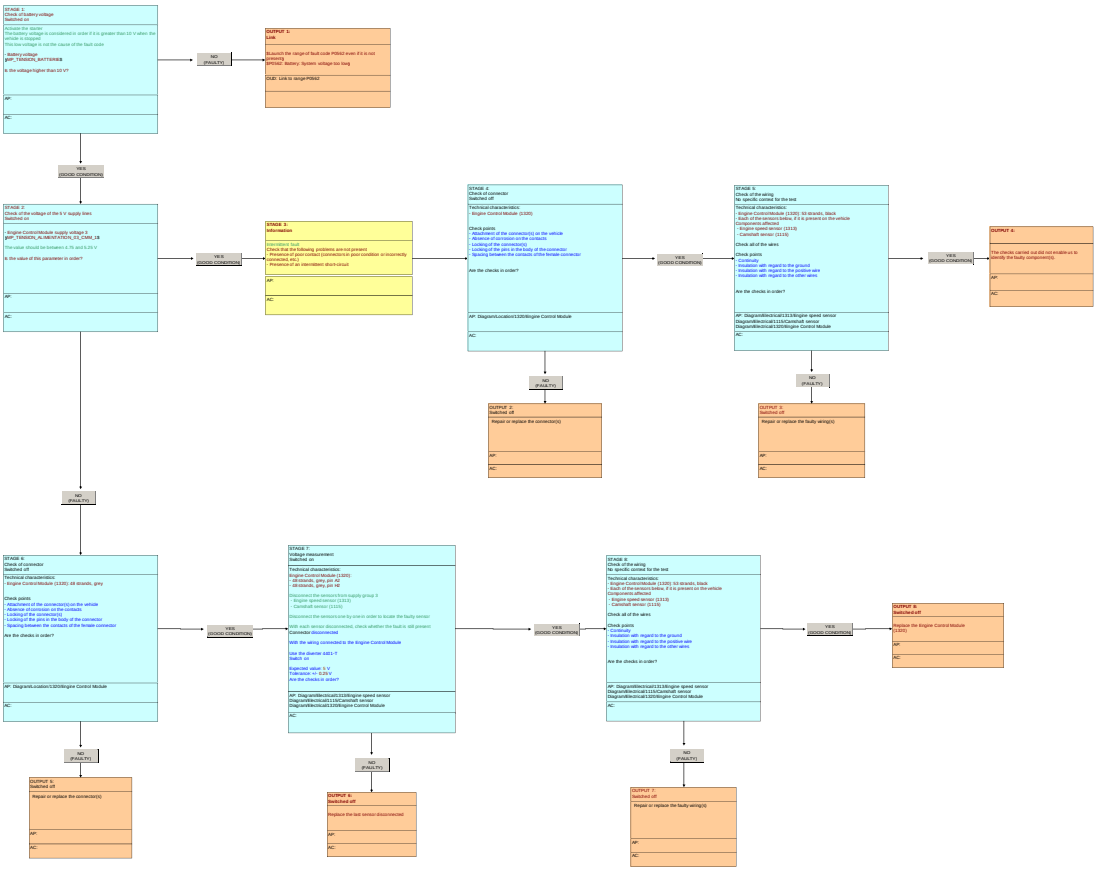

INFORMATION : FAULT CODE P3007 (ENGINE ECU)

SPECIAL FEATURE :

FOR : 1CB7 - B0FBM : DV6C TURBO DIESEL

FOR : 1CX7 - B0FBM : DV6C TURBO DIESEL

FOR : 1C58 - B0FBM : DV6C TURBO DIESEL

FOR : 1PT7 - B0FBM : DV6C TURBO DIESEL

FOR : 1PW2 - B0FBM : DV6C TURBO DIESEL

FOR : 1CB8 - B0FBM : DV6C TURBO DIESEL

FOR : 1CXA - B0FBM : DV6C TURBO DIESEL

FOR : 1CYA - B0FBM : DV6C TURBO DIESEL

FOR : 1PTB - B0FBM : DV6C TURBO DIESEL

FOR : 1PTC - B0FBM : DV6C TURBO DIESEL

FOR : 1PIA - B0FBM : DV6C TURBO DIESEL

FOR : 1CMJ - B0FBM : DV6C TURBO DIESEL

FOR : 1PMJ - B0FBM : DV6C TURBO DIESEL

Engine ECU CONTINENTAL SID 807 branch 2	
Fault code	P3007
After sales description of the fault code	Air circuit : Air flow lower than recommended
Description of the diagnostics	Ratio of measured airflow over calculated theoretical airflow below - 25 % detected for 2,5 seconds
Conditions of activation of the diagnostics	The following conditions have to be met - In the pedal release phase - Air temperature higher than -20°C - Battery voltage between 10 and 16 V - Turbo pressure between 750 and 1500 mbars - Engine coolant temperature between 40 and 110 degrees C

	- Engine speed between 1200 and 2500 rpm - Air mixer open - Exhaust gas recycling valve closed (For more than 2 s)
Conditions of disappearance of the fault	Driving for 5 minutes with decelerations of more than 10 seconds
Down-grade modes if fault present	Closing of the EGR (exhaust gas recycling) valve
	Switching of the turbocharging pressure regulation to controlled mode
	Sending of the information "torque uncertain" on the CAN network
	Deactivation of the request for regeneration of the particle filter from the diagnostic tool
Switching on of the warning lamp and/or warning message	Warning lamp MIL
Main customer complaints likely	Jerking/stalling
	Noise
	Lack of power
	Starting problem
	Smoke from the exhaust
	Fluid leak/smells (diesel fuel, oil, etc.)
	Engine acceleration at wrong time
	Absence of automatic stopping of the internal combustion engine (Vehicle equipped with "stop and start")
	Problem with automatic restarting of the internal combustion engine (Vehicle equipped with "stop and start")
Suspect areas	Atmospheric pressure sensor in the engine management ECU
	Air temperature sensor at the air flowmeter
	Air flow meter
	Air intake between the air flow sensor and the turbocharger
	turbocharger
	Turbocharger variable geometry control solenoid valve
	Turbocharger variable geometry position repeat sensor
	Manifold air entry pressure sensor
	Manifold entry air temperature sensor
	Exhaust gas recycling valve
	oil
	sump
	Oil suction strainer
	oil pump
	Lubrication circuit of the turbocharger

	Electrical harnesses
	Connectors

Fault code(s): P3007 or P3027

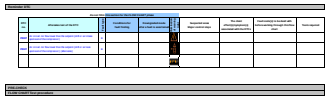

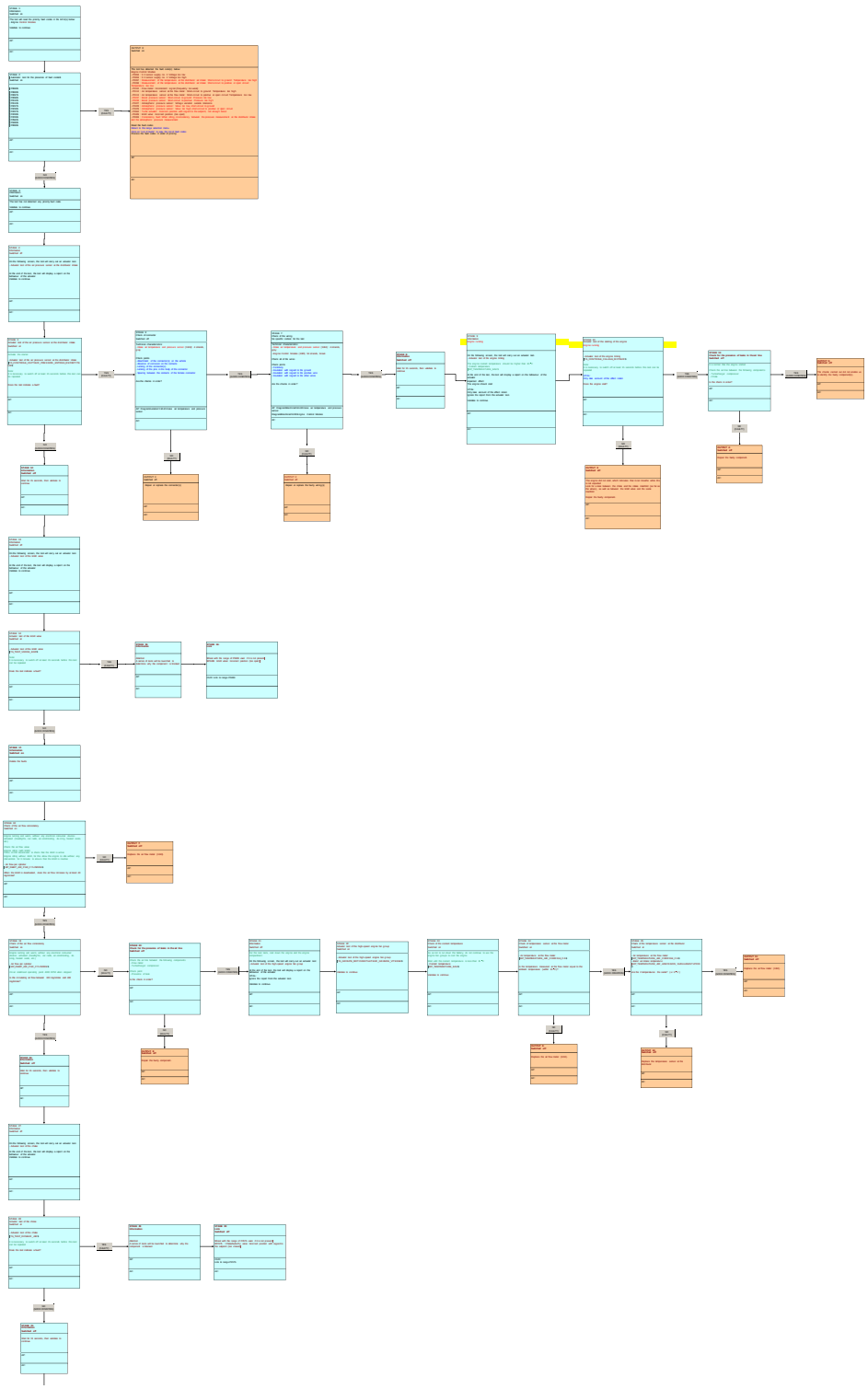

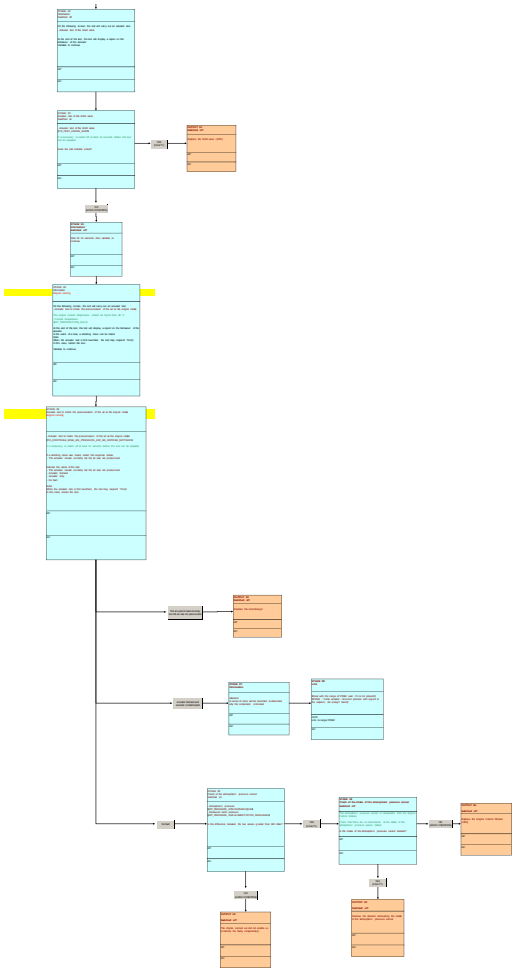

INFORMATION : FAULT CODE P3008 (ENGINE ECU)

SPECIAL FEATURE :

FOR : 1CB7 - B0FBM : DV6C TURBO DIESEL

FOR : 1CX7 - B0FBM : DV6C TURBO DIESEL

FOR : 1C58 - B0FBM : DV6C TURBO DIESEL

FOR : 1PT7 - B0FBM : DV6C TURBO DIESEL

FOR : 1PW2 - B0FBM : DV6C TURBO DIESEL

FOR : 1CB8 - B0FBM : DV6C TURBO DIESEL

FOR : 1CXA - B0FBM : DV6C TURBO DIESEL

FOR : 1CYA - B0FBM : DV6C TURBO DIESEL

FOR : 1PTB - B0FBM : DV6C TURBO DIESEL

FOR : 1PTC - B0FBM : DV6C TURBO DIESEL

FOR : 1PIA - B0FBM : DV6C TURBO DIESEL

FOR : 1CMJ - B0FBM : DV6C TURBO DIESEL

FOR : 1PMJ - B0FBM : DV6C TURBO DIESEL

Engine ECU CONTINENTAL SID 807 branch 2	
Fault code	P3008
After sales description of the fault code	Air circuit : Air flow higher than recommended
Description of the diagnostics	Ratio of the measured air flow to the theoretical air flow calculated greater than 18 %, detected for 2,5 seconds
Conditions of activation of the diagnostics	The following conditions have to be met - In the pedal release phase - Air temperature higher than -20°C - Battery voltage between 10 and 16 V - Turbo pressure between 750 and 1500 mbars - Engine coolant temperature between 40 and 110 degrees C

	- Engine speed between 1200 and 2500 rpm - Air mixer open - Exhaust gas recycling valve closed (For more than 2 s)
Conditions of disappearance of the fault	Driving for 5 minutes with decelerations of more than 10 seconds
Down-grade modes if fault present	Closing of the EGR (exhaust gas recycling) valve
	Switching of the turbocharging pressure regulation to controlled mode
	Deactivation of the request for regeneration of the particle filter from the diagnostic tool
	Sending of the information "torque uncertain" on the CAN network
Switching on of the warning lamp and/or warning message	Warning lamp MIL
Main customer complaints likely	Jerking/stalling
	Noise
	Lack of power
	Absence of automatic stopping of the internal combustion engine (Vehicle equipped with "stop and start")
	Slightly higher fuel consumption
	Smoke from the exhaust
	Fluid leak/smells (diesel fuel, oil, etc.)
	Engine overheating with illumination of the engine coolant temperature indicator light
	Problem with automatic restarting of the internal combustion engine (Vehicle equipped with "stop and start")
Suspect areas	Atmospheric pressure sensor in the engine management ECU
	Air flow meter
	Air leak between turbocharger and mixer
	Leak on the turbocharging air cooler
	Leak between the air mixer and the engine intake (including EGR inlet point)
	Leak on the air mixer
	Air leak on the turbocharger housing
	Air leak on the EGR exchanger with by-pass
	Turbocharger variable geometry position repeat sensor
	Manifold air entry pressure sensor
	Electrical harnesses
	Connectors

Fault code(s): P3008 or P3026



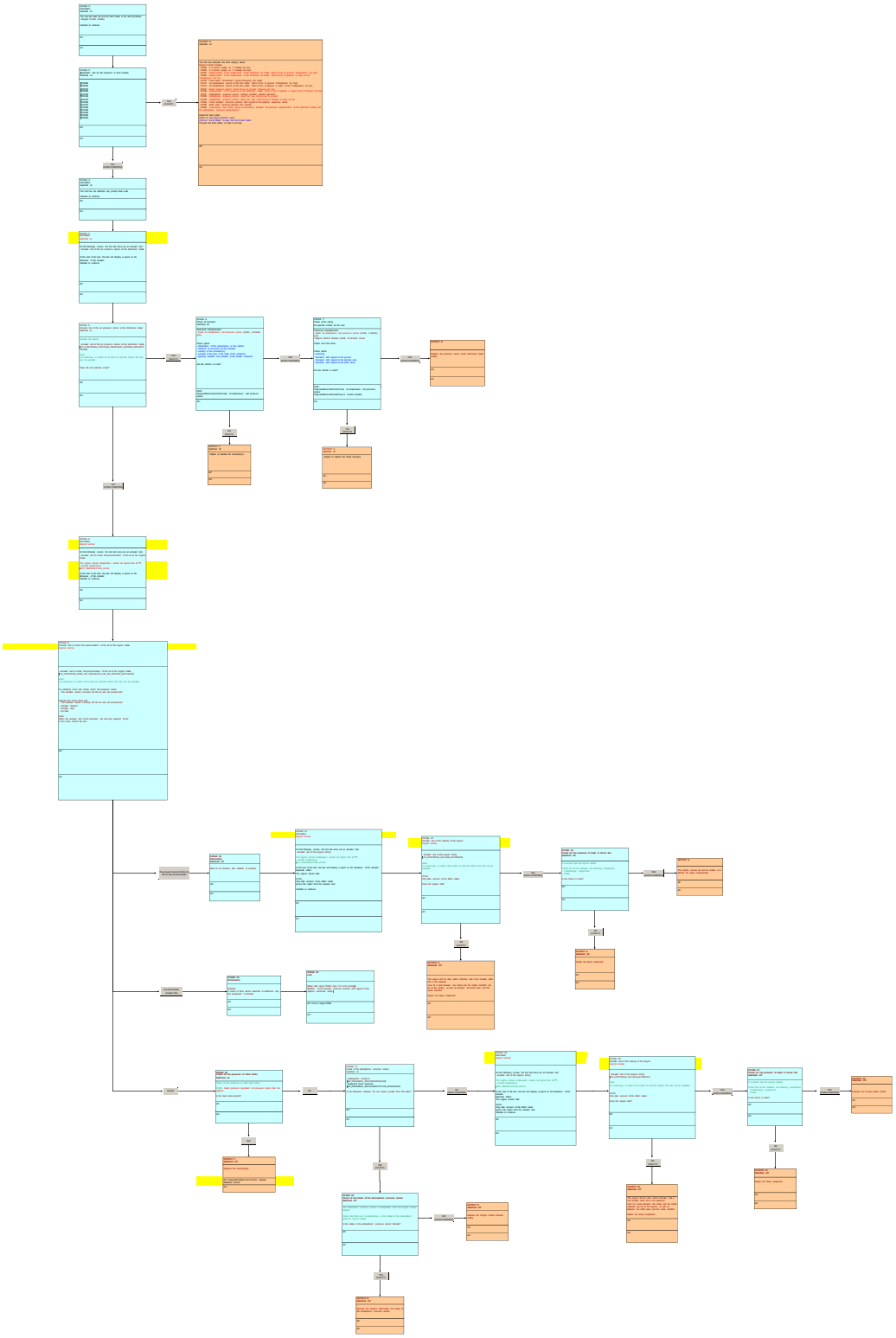

INFORMATION : FAULT CODE P3026 (ENGINE ECU)

SPECIAL FEATURE :

FOR : 1CB7 - B0FBM : DV6C TURBO DIESEL

FOR : 1CX7 - B0FBM : DV6C TURBO DIESEL

FOR : 1C58 - B0FBM : DV6C TURBO DIESEL

FOR : 1PT7 - B0FBM : DV6C TURBO DIESEL

FOR : 1PW2 - B0FBM : DV6C TURBO DIESEL

FOR : 1CB8 - B0FBM : DV6C TURBO DIESEL

FOR : 1CXA - B0FBM : DV6C TURBO DIESEL

FOR : 1CYA - B0FBM : DV6C TURBO DIESEL

FOR : 1PTB - B0FBM : DV6C TURBO DIESEL

FOR : 1PTC - B0FBM : DV6C TURBO DIESEL

FOR : 1PIA - B0FBM : DV6C TURBO DIESEL

FOR : 1CMJ - B0FBM : DV6C TURBO DIESEL

FOR : 1PMJ - B0FBM : DV6C TURBO DIESEL

Engine ECU CONTINENTAL SID 807 branch 2	
Fault code	P3026
After sales description of the fault code	Air circuit : Air flow higher than recommended (Service)
Description of the diagnostics	Ratio of the measured air flow to the theoretical air flow calculated greater than 15 %, detected for 2,5 seconds
Conditions of activation of the diagnostics	The following conditions have to be met - In the pedal release phase - Air temperature higher than -20°C - Battery voltage between 10 and 16 V - Turbo pressure between 750 and 1500 mbars - Engine coolant temperature between 40 and 110 degrees C

	- Engine speed between 1200 and 2500 rpm - Air mixer open - Exhaust gas recirculation valve closed for more than 2 seconds
Conditions of disappearance of the fault	Driving for 5 minutes with decelerations of more than 10 seconds
Down-grade modes if fault present	-
Switching on of the warning lamp and/or warning message	-
Main customer complaints likely	Jerking/stalling
	Noise
	Lack of power
	No automatic stopping of the internal combustion engine (Vehicle equipped with "stop and start")
	Slightly higher fuel consumption
	Smoke from the exhaust
	Fluid leak/smells (diesel fuel, oil, etc.)
	Engine overheating with illumination of the engine coolant temperature indicator light
	Problem with automatic restarting of the internal combustion engine (Vehicle equipped with "stop and start")
Suspect areas	Atmospheric pressure sensor in the engine management ECU
	Air flow meter
	Air leak between turbocharger and mixer
	Leak on the turbocharging air cooler
	Leak between the air mixer and the engine intake (including EGR inlet point)
	Leak on the air mixer
	Air leak on the turbocharger housing
	Air leak on the EGR exchanger with by-pass
	Turbocharger variable geometry position repeat sensor
	Manifold air entry pressure sensor
	Electrical harnesses
	Connectors

Fault code(s): P3008 or P3026



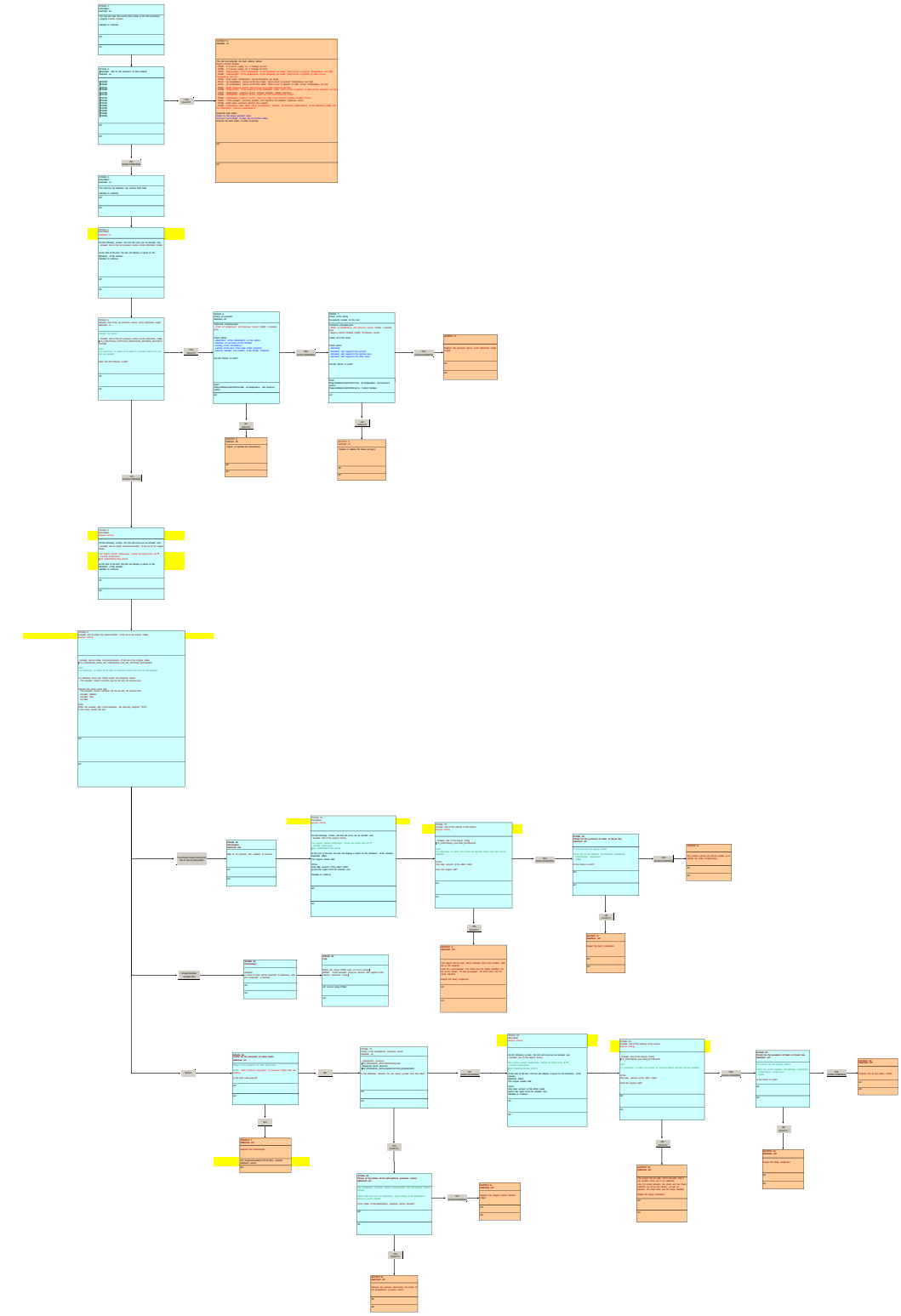

INFORMATION : FAULT CODE P3027 (ENGINE ECU)

SPECIAL FEATURE :

FOR : 1CB7 - B0FBM : DV6C TURBO DIESEL

FOR : 1CX7 - B0FBM : DV6C TURBO DIESEL

FOR : 1C58 - B0FBM : DV6C TURBO DIESEL

FOR : 1PT7 - B0FBM : DV6C TURBO DIESEL

FOR : 1PW2 - B0FBM : DV6C TURBO DIESEL

FOR : 1CB8 - B0FBM : DV6C TURBO DIESEL

FOR : 1CXA - B0FBM : DV6C TURBO DIESEL

FOR : 1CYA - B0FBM : DV6C TURBO DIESEL

FOR : 1PTB - B0FBM : DV6C TURBO DIESEL

FOR : 1PTC - B0FBM : DV6C TURBO DIESEL

FOR : 1PIA - B0FBM : DV6C TURBO DIESEL

FOR : 1CMJ - B0FBM : DV6C TURBO DIESEL

FOR : 1PMJ - B0FBM : DV6C TURBO DIESEL

Engine ECU CONTINENTAL SID 807 branch 2	
Fault code	P3027
After sales description of the fault code	Air circuit : Air flow lower than recommended (Service)
Description of the diagnostics	Ratio of measured airflow over calculated theoretical airflow below - 25 % detected for 2,5 seconds
Conditions of activation of the diagnostics	The following conditions have to be met - In the pedal release phase - Air temperature higher than -20°C - Battery voltage between 10 and 16 V - Turbo pressure between 750 and 1500 mbars - Engine coolant temperature between 40 and 110 degrees C

	- Engine speed between 1200 and 2500 rpm - Air mixer open - Exhaust gas recycling valve closed (For more than 2 s)
Conditions of disappearance of the fault	Driving for 5 minutes with decelerations of more than 10 seconds
Down-grade modes if fault present	-
Switching on of the warning lamp and/or warning message	-
Main customer complaints likely	Jerking/stalling
	Noise
	Lack of power
	No automatic stopping of the internal combustion engine (Vehicle equipped with "stop and start")
	Starting problem
	Smoke from the exhaust
	Fluid leak/smells (diesel fuel, oil, etc.)
	Engine acceleration at wrong time
	Problem with automatic restarting of the internal combustion engine (Vehicle equipped with "stop and start")
Suspect areas	Atmospheric pressure sensor in the engine management ECU
	Air temperature sensor at the air flowmeter
	Air flow meter
	Air intake between the air flow sensor and the turbocharger
	Turbocharger
	Turbocharger variable geometry control solenoid valve
	Turbocharger variable geometry position repeat sensor
	Manifold air entry pressure sensor
	Manifold inlet air temperature sensor
	Exhaust gas recycling valve
	oil
	sump
	Oil suction strainer
	Oil pump
	Lubrication circuit of the turbocharger
	Electrical harnesses
	Connectors

Fault code(s): P3007 or P3027

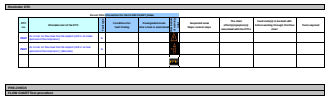

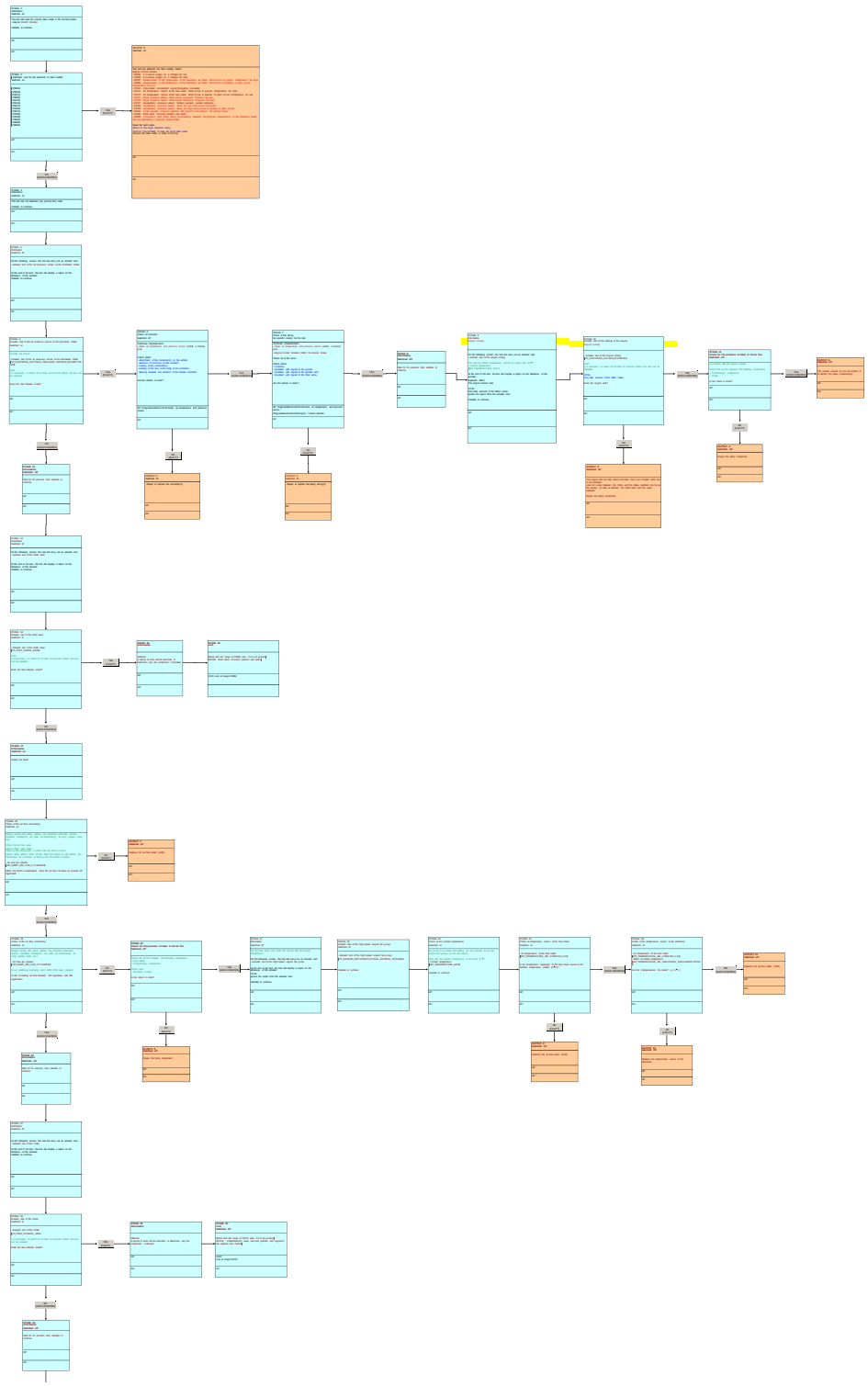

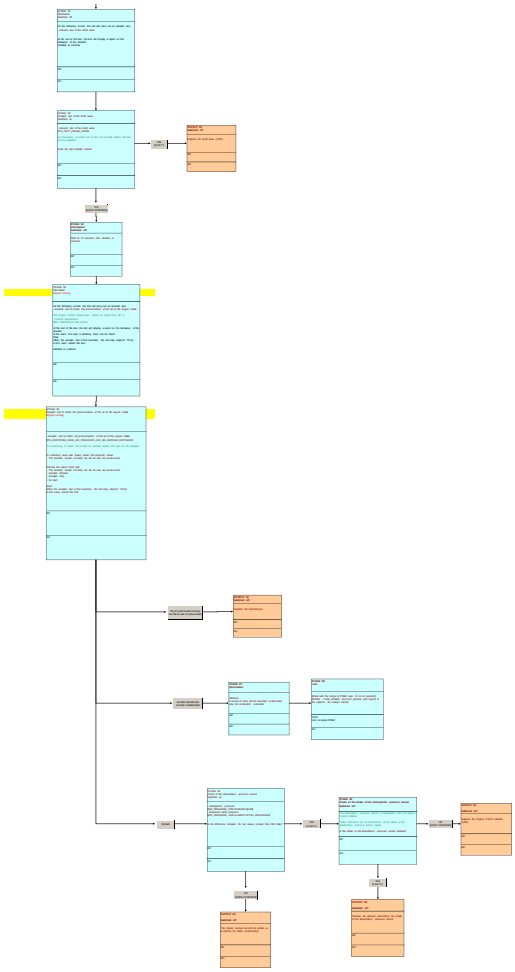

INFORMATION : FAULT CODE U0073 (ENGINE ECU)

SPECIAL FEATURE :

FOR : 1CB7 - B0FBM : DV6C TURBO DIESEL

FOR : 1CX7 - B0FBM : DV6C TURBO DIESEL

FOR : 1C58 - B0FBM : DV6C TURBO DIESEL

FOR : 1PT7 - B0FBM : DV6C TURBO DIESEL

FOR : 1PW2 - B0FBM : DV6C TURBO DIESEL

FOR : 1CB8 - B0FBM : DV6C TURBO DIESEL

FOR : 1CXA - B0FBM : DV6C TURBO DIESEL

FOR : 1CYA - B0FBM : DV6C TURBO DIESEL

FOR : 1PTB - B0FBM : DV6C TURBO DIESEL

FOR : 1PTC - B0FBM : DV6C TURBO DIESEL

FOR : 1PIA - B0FBM : DV6C TURBO DIESEL

FOR : 1CMJ - B0FBM : DV6C TURBO DIESEL

FOR : 1PMJ - B0FBM : DV6C TURBO DIESEL

Engine ECU CONTINENTAL SID 807 branch 2	
Fault code	U0073
After sales description of the fault code	Intersystems CAN : CAN in error
Description of the diagnostics	Faults in communication between ECUs on the CAN network
Conditions of activation of the diagnostics	At least one of the following conditions must be fulfilled - Ignition switched on - Engine running
Conditions of disappearance of the fault	Driving for 5 minutes
Down-grade modes if fault present	Reversible deactivation of the vehicle speed limiter
	Reversible deactivation of the limiting of the vehicle speed
Switching on of the	

warning lamp and/or warning message	Warning lamp MIL
Main customer complaints likely	Jerking/stalling
	Starting problem
	Lack of power
Suspect areas	Engine ECU
	Intersystem CAN network

Fault code(s): U0073

Reminder DTC

Do not fill in this section for the FLOW CHART phase

DTC hex.	Aftersales text of the DTC	Hard type	Conditions for fault finding	Downgraded mode after a fault is ascertained	Warning light (MIL)	Suspected areas Major control steps	The client effect(s)/symptom(s) associated with the DTCs	Fault code(s) to be dealt with before working through this flow chart	Tools required
U0073	CAN inter-system network: Total loss of communication from the CAN network	Y							

PRE-CHECK

FLOW CHART Test procedure

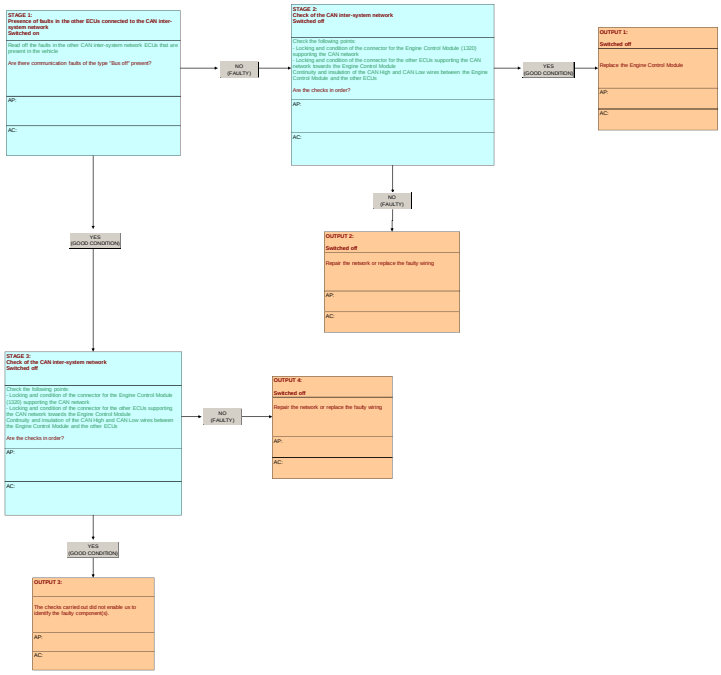

INFORMATION : FAULT CODE U0121 (ENGINE ECU)

SPECIAL FEATURE :

FOR : 1CMJ - B0FBM : DV6C TURBO DIESEL

FOR : 1PMJ - B0FBM : DV6C TURBO DIESEL

FOR : 1CB7 - B0FBM : DV6C TURBO DIESEL

FOR : 1CX7 - B0FBM : DV6C TURBO DIESEL

FOR : 1C58 - B0FBM : DV6C TURBO DIESEL

FOR : 1PT7 - B0FBM : DV6C TURBO DIESEL

FOR : 1PW2 - B0FBM : DV6C TURBO DIESEL

FOR : 1CB8 - B0FBM : DV6C TURBO DIESEL

FOR : 1CXA - B0FBM : DV6C TURBO DIESEL

FOR : 1CYA - B0FBM : DV6C TURBO DIESEL

FOR : 1PTB - B0FBM : DV6C TURBO DIESEL

FOR : 1PTC - B0FBM : DV6C TURBO DIESEL

FOR : 1PIA - B0FBM : DV6C TURBO DIESEL

Engine ECU CONTINENTAL SID 807 branch 2	
Fault code	U0121
After sales description of the fault code	Intersystems CAN : Absence of communication with the ABS/ESP ECU
Description of the diagnostics	Faults in communication between ECUs on the CAN network
Conditions of activation of the diagnostics	At least one of the following conditions must be fulfilled - Ignition switched on - Engine running
Conditions of disappearance of the fault	Driving for 5 minutes
Down-grade modes if fault present	Irreversible deactivation of the vehicle speed limiter
	Irreversible deactivation of the vehicle speed curbing function
	Irreversible deactivation of the vehicle cruise

	control
	Sending of the information "torque uncertain" on the CAN network
Switching on of the warning lamp and/or warning message	Warning lamp MIL
Main customer complaints likely	Jerking/stalling
	Starting problem
	Lack of power
Suspect areas	Engine ECU
	Intersystem CAN network

Fault code(s): U0121

Reminder DTC

Do not fill in this section for the FLOW CHART phase

DTC no.	Alternates text of the DTC	Fault type	Conditions for fault finding	Downgraded mode after a fault is ascertained	Warning lamp (if any)	Suspected zones Major control steps	The client effect(Symptom(s)) associated with the DTCs	Fault code(s) to be dealt with before working through this flow chart	Tools required
U0121	CAN/inter-system network: Timeout of the ECU-ABC	Stop and start							

PRE-CHECK

FLOW CHART Test procedure

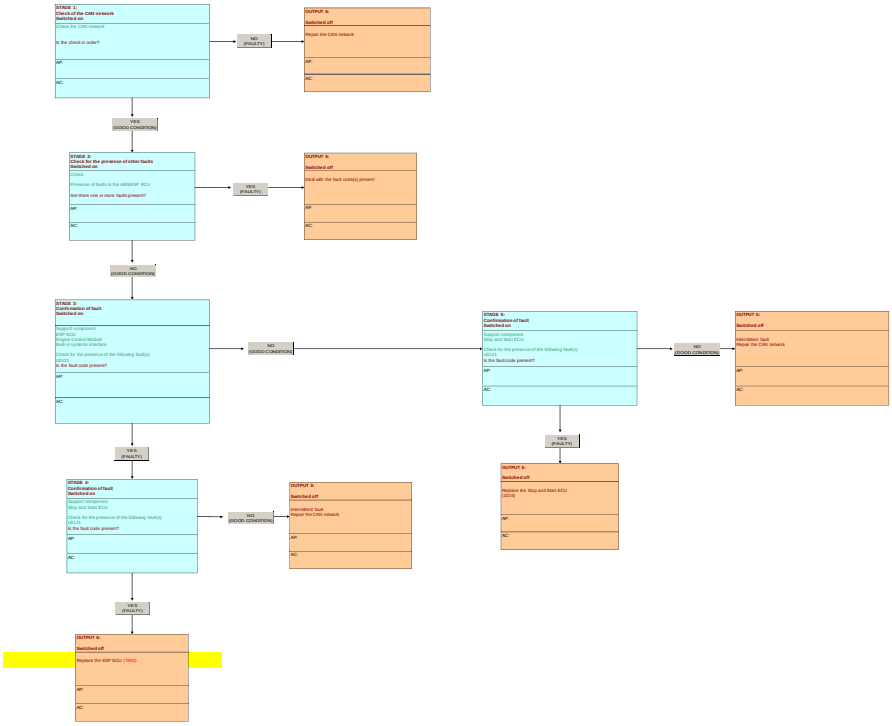

Fault code(s): U0121 or U1113

Reminder DTC

Do not fill in this section for the FLOW CHART phase

DTC no.	Alternates text of the DTC	Fault type	Conditions for fault finding	Downgraded mode after a fault is ascertained	Driver warning lamp(s)	Suspected areas Major control steps	The client effect(Symptom(s)) associated with the DTC's	Fault code(s) to be dealt with before working through this flow chart	Tools required
U0121	CAN/inter-system network: No communication with the ABS or ESP ECU with an OBD impact	x							
U1113	CAN/inter-system network: No communication with the ABS or ESP ECU	x							
					STRTC				

PRE-CHECK

FLOW CHART Test procedure

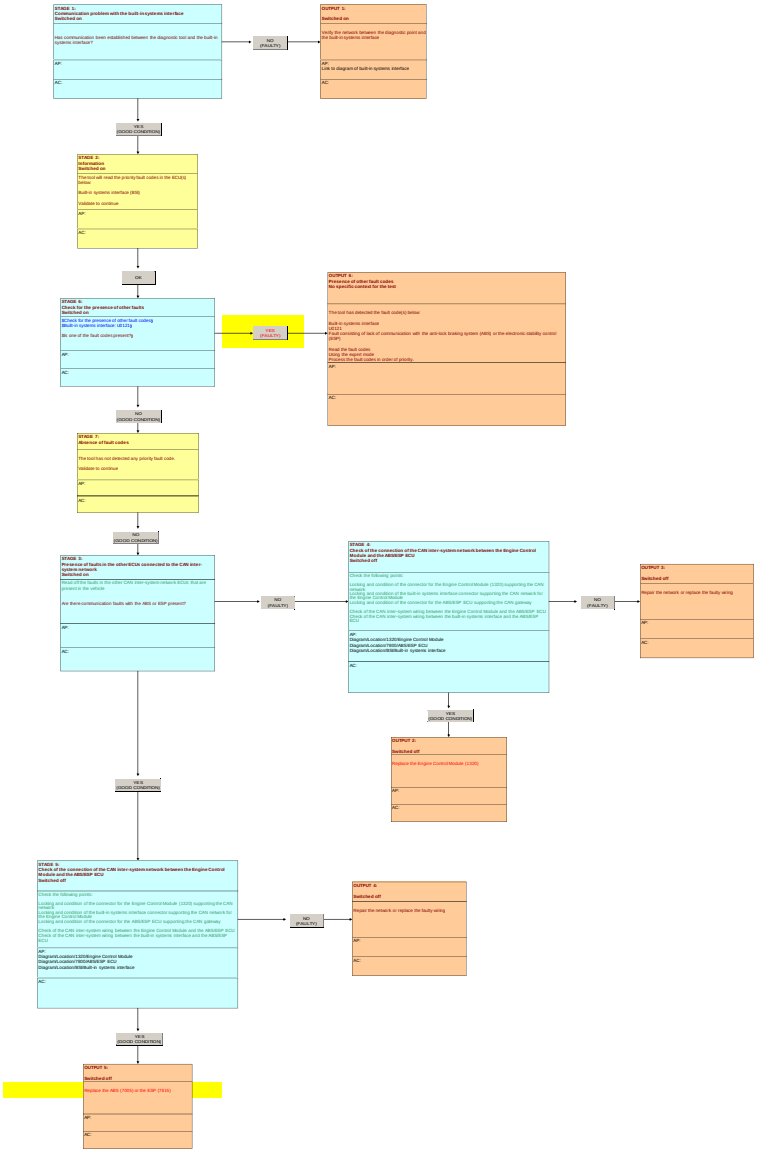

INFORMATION : FAULT CODE U0140 (ENGINE ECU)

SPECIAL FEATURE :

FOR : 1CB7 - B0FBM : DV6C TURBO DIESEL

FOR : 1CX7 - B0FBM : DV6C TURBO DIESEL

FOR : 1C58 - B0FBM : DV6C TURBO DIESEL

FOR : 1PT7 - B0FBM : DV6C TURBO DIESEL

FOR : 1PW2 - B0FBM : DV6C TURBO DIESEL

FOR : 1CB8 - B0FBM : DV6C TURBO DIESEL

FOR : 1CXA - B0FBM : DV6C TURBO DIESEL

FOR : 1CYA - B0FBM : DV6C TURBO DIESEL

FOR : 1PTB - B0FBM : DV6C TURBO DIESEL

FOR : 1PTC - B0FBM : DV6C TURBO DIESEL

FOR : 1PIA - B0FBM : DV6C TURBO DIESEL

FOR : 1CMJ - B0FBM : DV6C TURBO DIESEL

FOR : 1PMJ - B0FBM : DV6C TURBO DIESEL

Engine ECU CONTINENTAL SID 807 branch 2	
Fault code	U0140
After sales description of the fault code	Intersystems CAN : Absence of communication with the BSI ECU
Description of the diagnostics	Faults in communication between ECUs on the CAN network
Conditions of activation of the diagnostics	At least one of the following conditions must be fulfilled - Ignition switched on - Engine running
Conditions of disappearance of the fault	Driving for 5 minutes
Down-grade modes if fault present	-
Switching on of the warning lamp and/or warning message	Warning lamp MIL

Main customer complaints likely	Jerking/stalling
	Starting problem
	Lack of power
Suspect areas	Engine ECU
	Intersystem CAN network

Fault code(s): U0140 or U1118

Reminder DTC

Do not fill in this section for the FLOW CHART phase

DTC no.	Aftersales text of the DTC	Fault type	Conditions for fault finding	Downgraded mode after a fault is ascertained	Driving safety risk (if yes, tick the box)	Suspected areas Major control loops	The client effect(s)/symptom(s) associated with the DTC(s)	Fault code(s) to be dealt with before working through this flow chart	Tools required
U0140	CAN inter-system network: No communication with the built-in systems interface ECU with an OBD impact	A							
U1118	CAN inter-system network: No communication with the built-in systems interface ECU	A							

PRE-CHECK

FLOW CHART Test procedure

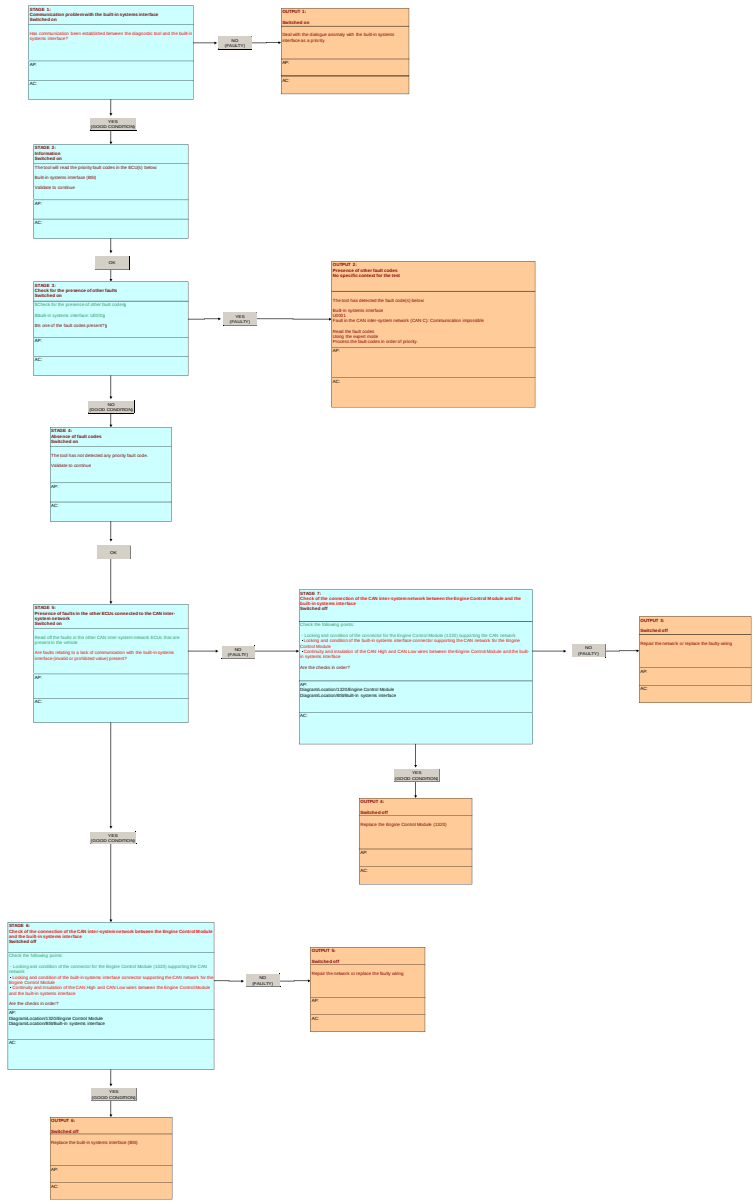

INFORMATION : FAULT CODE U0315 (ENGINE ECU)

SPECIAL FEATURE :

FOR : 1CB7 - B0FBM : DV6C TURBO DIESEL

FOR : 1CX7 - B0FBM : DV6C TURBO DIESEL

FOR : 1C58 - B0FBM : DV6C TURBO DIESEL

FOR : 1PT7 - B0FBM : DV6C TURBO DIESEL

FOR : 1PW2 - B0FBM : DV6C TURBO DIESEL

FOR : 1CB8 - B0FBM : DV6C TURBO DIESEL

FOR : 1CXA - B0FBM : DV6C TURBO DIESEL

FOR : 1CYA - B0FBM : DV6C TURBO DIESEL

FOR : 1PTB - B0FBM : DV6C TURBO DIESEL

FOR : 1PTC - B0FBM : DV6C TURBO DIESEL

FOR : 1PIA - B0FBM : DV6C TURBO DIESEL

FOR : 1CMJ - B0FBM : DV6C TURBO DIESEL

FOR : 1PMJ - B0FBM : DV6C TURBO DIESEL

Engine ECU CONTINENTAL SID 807 branch 2	
Fault code	U0315
After sales description of the fault code	Intersystems CAN : Error in length or prohibited value on the ABS/ESP datastream
Description of the diagnostics	Faults in communication between ECUs on the CAN network
Conditions of activation of the diagnostics	At least one of the following conditions must be fulfilled - Ignition switched on - Engine running
Conditions of disappearance of the fault	Driving for 5 minutes
Down-grade modes if fault present	Irreversible deactivation of the vehicle speed limiter
	Irreversible deactivation of the vehicle speed curbing function
	Irreversible deactivation of the vehicle cruise control

	Sending of the information "torque uncertain" on the CAN network
Switching on of the warning lamp and/or warning message	Warning lamp MIL
Main customer complaints likely	Jerking/stalling
	Starting problem
	Lack of power
Suspect areas	Engine ECU
	Intersystem CAN network

Fault code(s): U0315 or U1313 or P0500

Reminder DTC

Do not fill in this section for the FLOW CHART phase

DTC no.	Aftersales text of the DTC	Fault type	Conditions for fault finding	Downgraded mode after a fault is ascertained	Illumination or warning light	Suspected areas Major control steps	The client effect(s)/symptom(s) associated with the DTCs	Fault code(s) to be dealt with before working through this flow chart	Tools required
U0315	CAN inter-system network: Length error or value forbidden by the ABS/ESP framework with an OBD impact	F							
U1313	CAN inter-system network: Length error or value forbidden by the ABS/ESP framework	F							
P0500	CAN inter-system network: Vehicle speed information incorrect or missing	F							

PRE-CHECK

FLOW CHART Test procedure

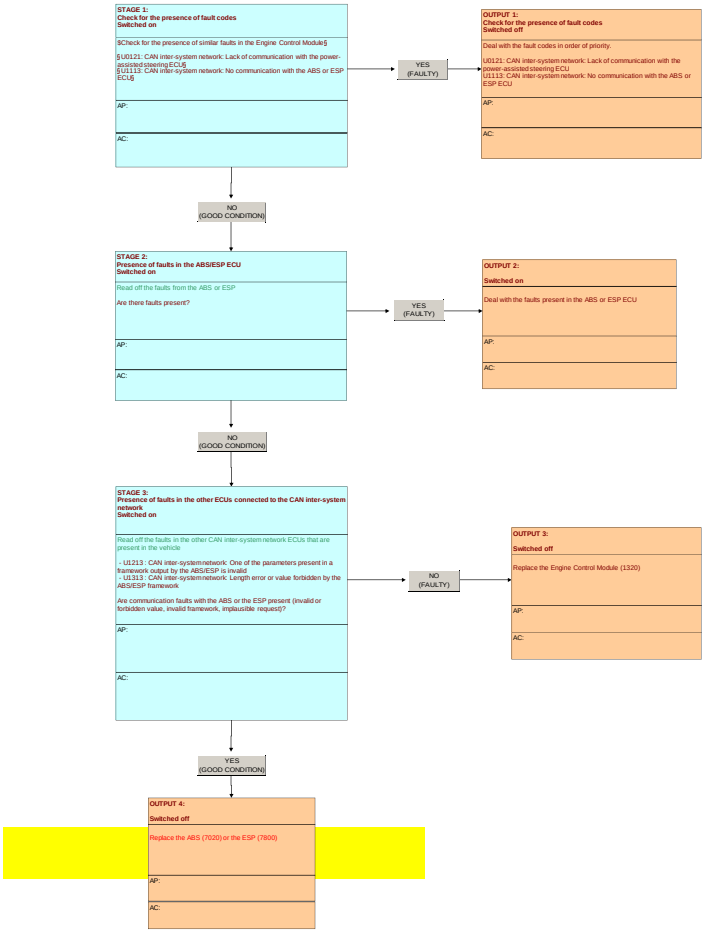

INFORMATION : FAULT CODE U0322 (ENGINE ECU)

SPECIAL FEATURE :

FOR : 1CB7 - B0FBM : DV6C TURBO DIESEL

FOR : 1CX7 - B0FBM : DV6C TURBO DIESEL

FOR : 1C58 - B0FBM : DV6C TURBO DIESEL

FOR : 1PT7 - B0FBM : DV6C TURBO DIESEL

FOR : 1PW2 - B0FBM : DV6C TURBO DIESEL

FOR : 1CB8 - B0FBM : DV6C TURBO DIESEL

FOR : 1CXA - B0FBM : DV6C TURBO DIESEL

FOR : 1CYA - B0FBM : DV6C TURBO DIESEL

FOR : 1PTB - B0FBM : DV6C TURBO DIESEL

FOR : 1PTC - B0FBM : DV6C TURBO DIESEL

FOR : 1PIA - B0FBM : DV6C TURBO DIESEL

FOR : 1CMJ - B0FBM : DV6C TURBO DIESEL

FOR : 1PMJ - B0FBM : DV6C TURBO DIESEL

Engine ECU CONTINENTAL SID 807 branch 2	
Fault code	U0322
After sales description of the fault code	Intersystems CAN : Error in length or prohibited value on the BSI datastream
Description of the diagnostics	Faults in communication between ECUs on the CAN network
Conditions of activation of the diagnostics	At least one of the following conditions must be fulfilled - Ignition switched on - Engine running
Conditions of disappearance of the fault	Driving for 5 minutes
Down-grade modes if fault present	-
Switching on of the warning lamp and/or warning message	Warning lamp MIL

Main customer complaints likely	Jerking/stalling
	Starting problem
	Lack of power
Suspect areas	Engine ECU
	Intersystem CAN network

Fault code(s): U0322 or U1218 or U1318 or P0070 or P0571

Reminder DTC

Do not fill in this section for the FLOW CHART phase

DTC n/a	Aftersales text of the DTC	Fault type	Conditions for fault finding	Downgraded mode after a fault is ascertained	Malfunction lamp	Suspected areas Major control steps	The client effect(s)/symptom(s) associated with the DTCs	Fault code(s) to be dealt with before working through this flow chart	Tools required
U0322	CAN inter-system network: Length error or value forbidden by the BSI framework with an OBD impact	F							
U1218	CAN inter-system network: One of the parameters present in a framework output by the BSI is invalid	F							
U1318	CAN inter-system network: Length error or value forbidden by the BSI framework	F							
P0070	CAN inter-system network: Invalid value for the external air temperature received by the CAN	F							
P0571	CAN inter-system network: Erroneous information on the main brake output by the BSI	F							

PRE-CHECK

FLOW CHART Test procedure

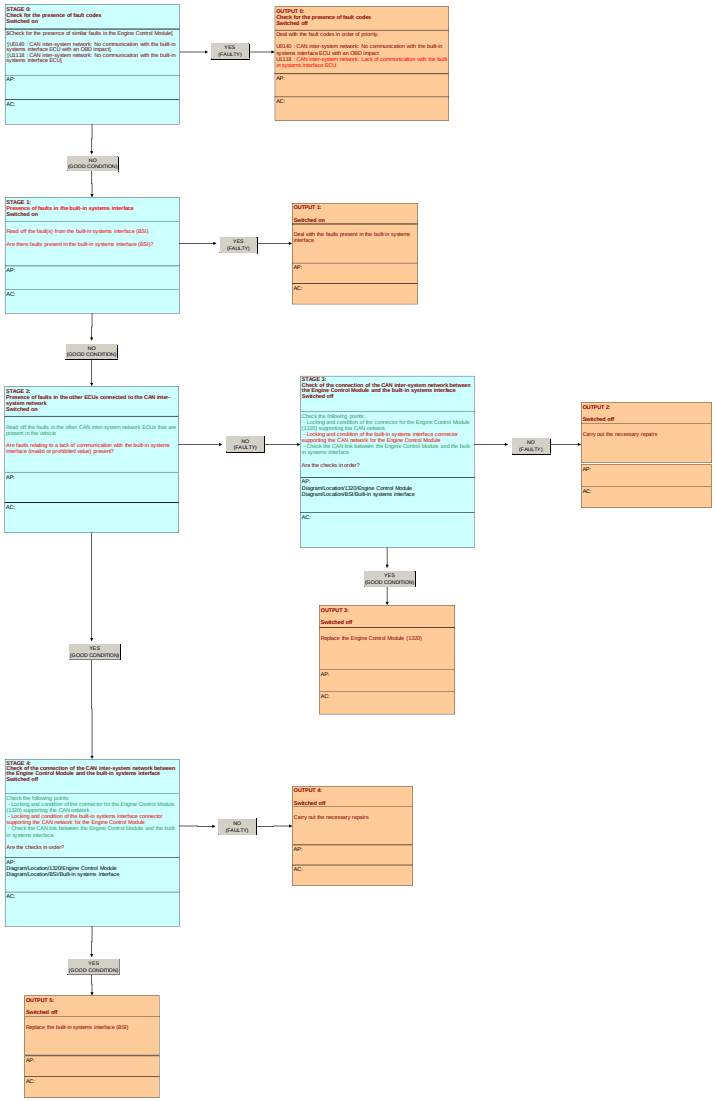

INFORMATION : FAULT CODE U1000 (ENGINE ECU)

SPECIAL FEATURE :

FOR : 1CB7 - B0FBM : DV6C TURBO DIESEL

FOR : 1CX7 - B0FBM : DV6C TURBO DIESEL

FOR : 1C58 - B0FBM : DV6C TURBO DIESEL

FOR : 1PT7 - B0FBM : DV6C TURBO DIESEL

FOR : 1PW2 - B0FBM : DV6C TURBO DIESEL

FOR : 1CB8 - B0FBM : DV6C TURBO DIESEL

FOR : 1CXA - B0FBM : DV6C TURBO DIESEL

FOR : 1CYA - B0FBM : DV6C TURBO DIESEL

FOR : 1PTB - B0FBM : DV6C TURBO DIESEL

FOR : 1PTC - B0FBM : DV6C TURBO DIESEL

FOR : 1PIA - B0FBM : DV6C TURBO DIESEL

FOR : 1CMJ - B0FBM : DV6C TURBO DIESEL

FOR : 1PMJ - B0FBM : DV6C TURBO DIESEL

Engine ECU CONTINENTAL SID 807 branch 2	
Fault code	U1000
After sales description of the fault code	Control unit : The engine ECU is detected mute by one of the ECUs on the network
Description of the diagnostics	Faults in communication between ECUs on the CAN network
Conditions of activation of the diagnostics	At least one of the following conditions must be fulfilled - Ignition switched on - Engine running
Conditions of disappearance of the fault	Driving for 5 minutes
Down-grade modes if fault present	Reversible deactivation of the vehicle speed limiter
	Reversible deactivation of the limiting of the vehicle speed
	Reversible deactivation of the vehicle cruise control

Switching on of the warning lamp and/or warning message	Warning lamp MIL
Main customer complaints likely	Jerking/stalling
	Starting problem
	Lack of power
Suspect areas	Engine ECU
	Intersystem CAN network

Fault code(s): U1000

Reminder DTC

Do not fill in this section for the FLOW CHART phase

DTC no.	Aftersales text of the DTC	Fault type	Conditions for fault finding	Downgraded mode after a fault is ascertained	Illumination of warning light	Suspected areas Major control steps	The client effect(s)/symptom(s) associated with the DTCs	Fault code(s) to be dealt with before working through this flow chart	Tools required
U1000	ECU: The Engine Control Module has been found to be mute by one of the ECUs in the network	c							
					SERVICE				

PRE-CHECK

FLOW CHART Test procedure

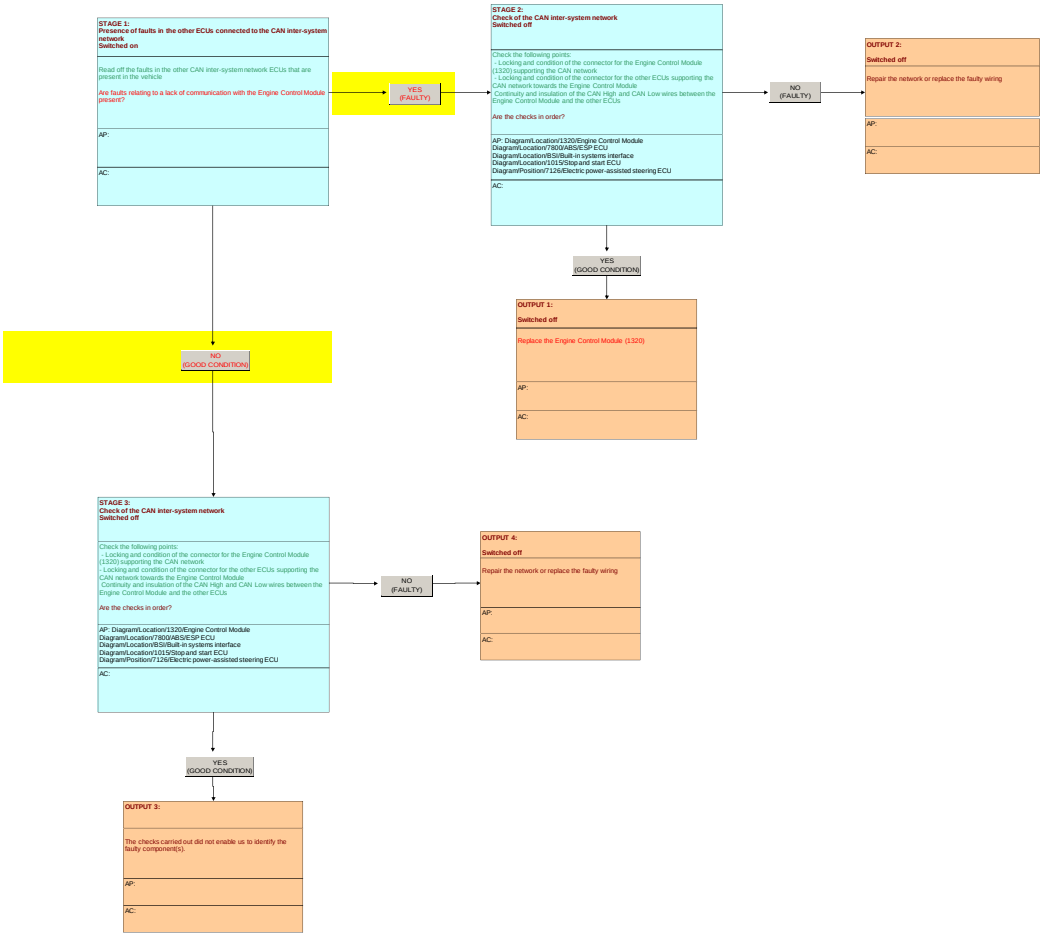

INFORMATION : FAULT CODE U1113 (ENGINE ECU)

SPECIAL FEATURE :

FOR : 1CB7 - B0FBM : DV6C TURBO DIESEL

FOR : 1CX7 - B0FBM : DV6C TURBO DIESEL

FOR : 1C58 - B0FBM : DV6C TURBO DIESEL

FOR : 1PT7 - B0FBM : DV6C TURBO DIESEL

FOR : 1PW2 - B0FBM : DV6C TURBO DIESEL

FOR : 1CB8 - B0FBM : DV6C TURBO DIESEL

FOR : 1CXA - B0FBM : DV6C TURBO DIESEL

FOR : 1CYA - B0FBM : DV6C TURBO DIESEL

FOR : 1PTB - B0FBM : DV6C TURBO DIESEL

FOR : 1PTC - B0FBM : DV6C TURBO DIESEL

FOR : 1PIA - B0FBM : DV6C TURBO DIESEL

FOR : 1CMJ - B0FBM : DV6C TURBO DIESEL

FOR : 1PMJ - B0FBM : DV6C TURBO DIESEL

Engine ECU CONTINENTAL SID 807 branch 2	
Fault code	U1113
After sales description of the fault code	Intersystems CAN : Absence of communication with the ABS/ESP ECU
Description of the diagnostics	Faults in communication between ECUs on the CAN network
Conditions of activation of the diagnostics	At least one of the following conditions must be fulfilled - Ignition switched on - Engine running
Conditions of disappearance of the fault	Driving for 5 minutes
	Irreversible deactivation of the vehicle speed curbing function
	Irreversible deactivation of the vehicle speed limiter
	Irreversible deactivation of the vehicle cruise

Down-grade modes if fault present	control
	Deactivation of the "easy-move" (electric parking brake) functionality
	For a gearbox with engine speed regulation (automatic gearbox or piloted manual gearbox), limitation of the torque sent to the gearbox
	Sticking of the air conditioning on an ESP fault
Switching on of the warning lamp and/or warning message	-
Main customer complaints likely	Jerking/stalling
	Starting problem
	Lack of power
Suspect areas	Engine ECU
	Intersystem CAN network

Fault code(s): U0121 or U1113

Reminder DTC

Do not fill in this section for the FLOW CHART phase

DTC no.	Alternates text of the DTC	Fail Safe	Conditions for fault finding	Downgraded mode after a fault is ascertained	Warning lamp (if any)	Suspected areas Major control steps	The client effect(Symptom(s)) associated with the DTC's	Fault code(s) to be dealt with before working through this flow chart	Tools required
U0121	CAN/inter-system network: No communication with the ABS or ESP ECU with an OBD impact	X							
U1113	CAN/inter-system network: No communication with the ABS or ESP ECU	X							
					ETACS				

PRE-CHECK

FLOW CHART Test procedure

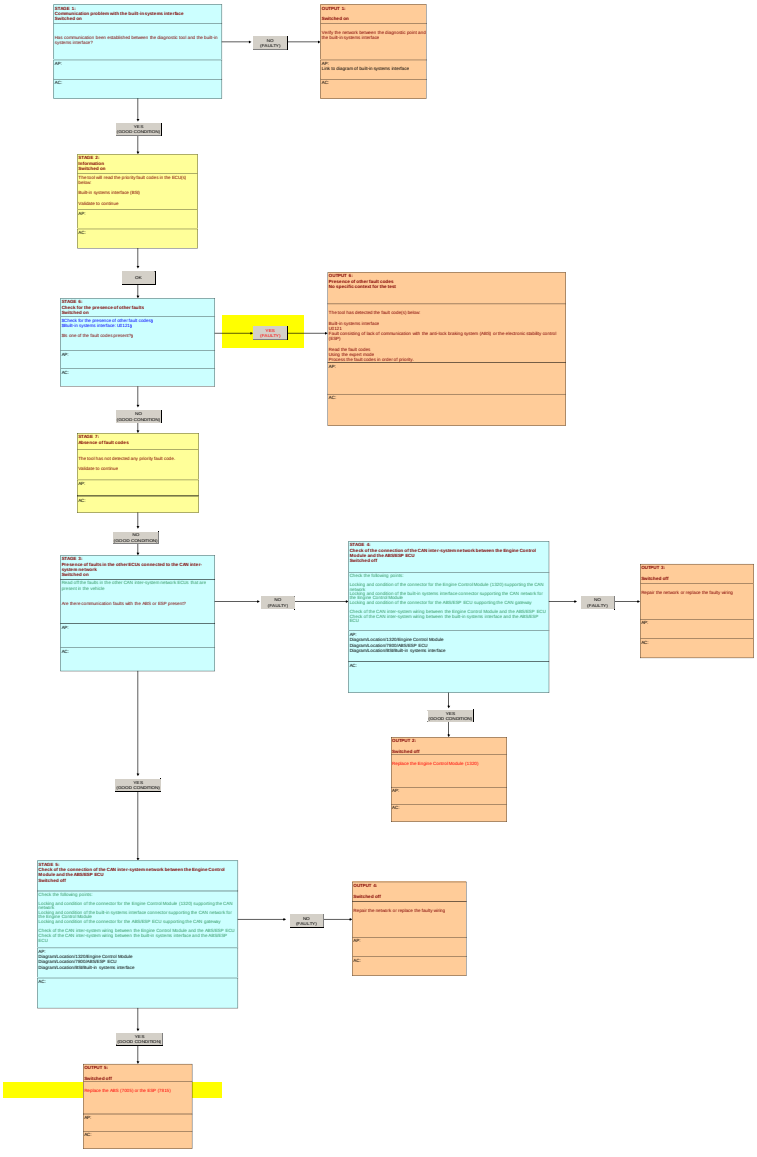

INFORMATION : FAULT CODE U1118 (ENGINE ECU)

SPECIAL FEATURE :

FOR : 1CMJ - B0FBM : DV6C TURBO DIESEL

FOR : 1PMJ - B0FBM : DV6C TURBO DIESEL

Engine ECU CONTINENTAL SID 807 branch 2	
Fault code	U1118
After sales description of the fault code	Intersystems CAN : Absence of communication with the BSI ECU
Description of the diagnostics	Faults in communication between ECUs on the CAN network
Conditions of activation of the diagnostics	At least one of the following conditions must be fulfilled - Ignition switched on - Engine running
Conditions of disappearance of the fault	Driving for 5 minutes
Down-grade modes if fault present	Reversible deactivation of the limiting of the vehicle speed
	Reversible deactivation of the vehicle speed limiter
	Reversible deactivation of the vehicle cruise control
Switching on of the warning lamp and/or warning message	-
Main customer complaints likely	Jerking/stalling
	Starting problem
	Lack of power
Suspect areas	Engine ECU
	Intersystem CAN network

Fault code(s): U0140 or U1118

Reminder DTC

Do not fill in this section for the FLOW CHART phase

DTC no.	Aftersales text of the DTC	Fault type	Conditions for fault finding	Downgraded mode after a fault is ascertained	Driver warning light (if any)	Suspected areas Major control steps	The client effect(s)/symptom(s) associated with the DTCs	Fault code(s) to be dealt with before working through this flow chart	Tools required
U0140	CAN inter-system network: No communication with the built-in systems interface ECU with an OBD impact	A							
U1118	CAN inter-system network: No communication with the built-in systems interface ECU	A							

PRE-CHECK

FLOW CHART Test procedure

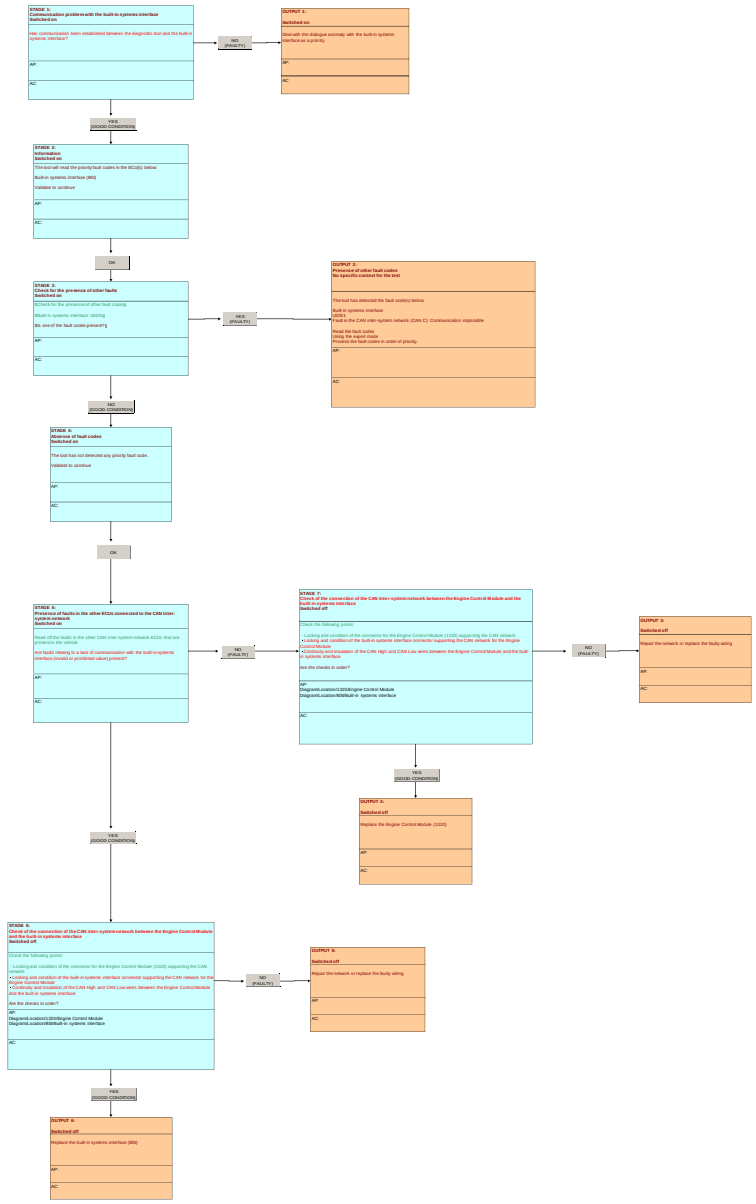

INFORMATION : FAULT CODE U1121 (ENGINE ECU)

SPECIAL FEATURE :

FOR : 1CMJ - B0FBM : DV6C TURBO DIESEL

FOR : 1PMJ - B0FBM : DV6C TURBO DIESEL

Engine ECU CONTINENTAL SID807 branch 2	
Fault code	U1121
After sales description of the fault code	Intersystems CAN : Absence of communication with the electric power steering ECU
Description of the diagnostics	Faults in communication between ECUs on the CAN network
Conditions of activation of the diagnostics	At least one of the following conditions must be fulfilled - Ignition on - Engine running
Conditions of disappearance of the fault	Driving for 5 minutes
Down-grade modes if fault present	-
Switching on of the warning lamp and/or warning message	-
Main customer complaints likely	Engine hesitating, cutting out
	Starting problem
	Lack of power
Suspect areas	Engine ECU
	Intersystem CAN network

Fault code(s): U1121 or U1321

Reminder DTC

Do not fill in this section for the FLOW CHART phase

DTC n/a	Aftersales text of the DTC	Fault type	Conditions for fault finding	Downgraded mode after a fault is ascertained	Warning lamp(s) on dashboard	Suspected areas Major control steps	The client effects/symptom(s) associated with the DTCs	Fault code(s) to be dealt with before working through this flow chart	Tools required
U1121	CAN inter-system network: Lack of communication with the power-assisted steering ECU	F							
U1321	CAN inter-system network: Length error or forbidden value of the framework output by the electric power-assisted steering ECU	F							

PRE-CHECK

FLOW CHART Test procedure

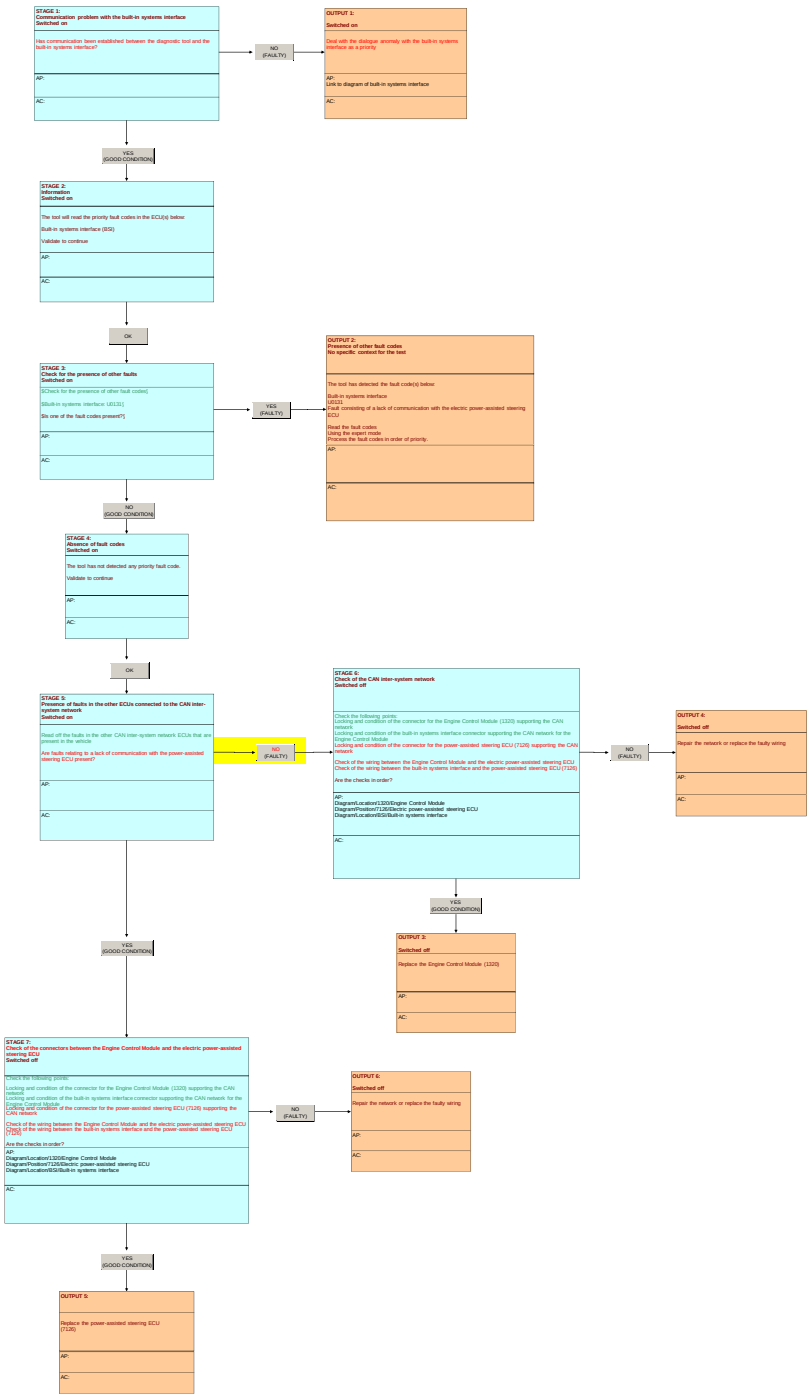

INFORMATION : FAULT CODE U1133 (ENGINE ECU)

SPECIAL FEATURE :

FOR : 1CMJ - B0FBM : DV6C TURBO DIESEL

FOR : 1PMJ - B0FBM : DV6C TURBO DIESEL

Engine ECU CONTINENTAL SID 807 branch 2	
Fault code	U1133
After sales description of the fault code	LIN : The reversible alternator is confirmed absent
Description of the diagnostics	Faults in communication between ECUs on the LIN
Conditions of activation of the diagnostics	Ignition switched on
Conditions of disappearance of the fault	Ignition switched on
Down-grade modes if fault present	Automatic restarting impossible following stopping of the engine (Requires restarting of the engine using the key)
Switching on of the warning lamp and/or warning message	-
Main customer complaints likely	Absence of automatic stopping of the internal combustion engine
	Problem with automatic restarting of the internal combustion engine
	Jerking/stalling
	Starting problem
	Lack of power
Suspect areas	Supply of the voltage retention device
	Reversible alternator supply
	Electrical harness

Fault code(s): U1133 or U1333

Reminder DTC

Do not fill in this section for the FLOW CHART phase

DTC no.	Aftersales text of the DTC	Fault type	Conditions for fault finding	Downgraded mode after a fault is ascertained	Driving safety warning light	Suspected areas Major control loops	The client effect(s)/symptom(s) associated with the DTC(s)	Fault code(s) to be dealt with before working through this flow chart	Tools required
U1133	CAN inter-system network: Lack of communication with the Stop and Start ECU	0							
U1333	CAN inter-system network: Length error or forbidden value of the framework output by the Stop and Start ECU	0							

PRE-CHECK

FLOW CHART Test procedure

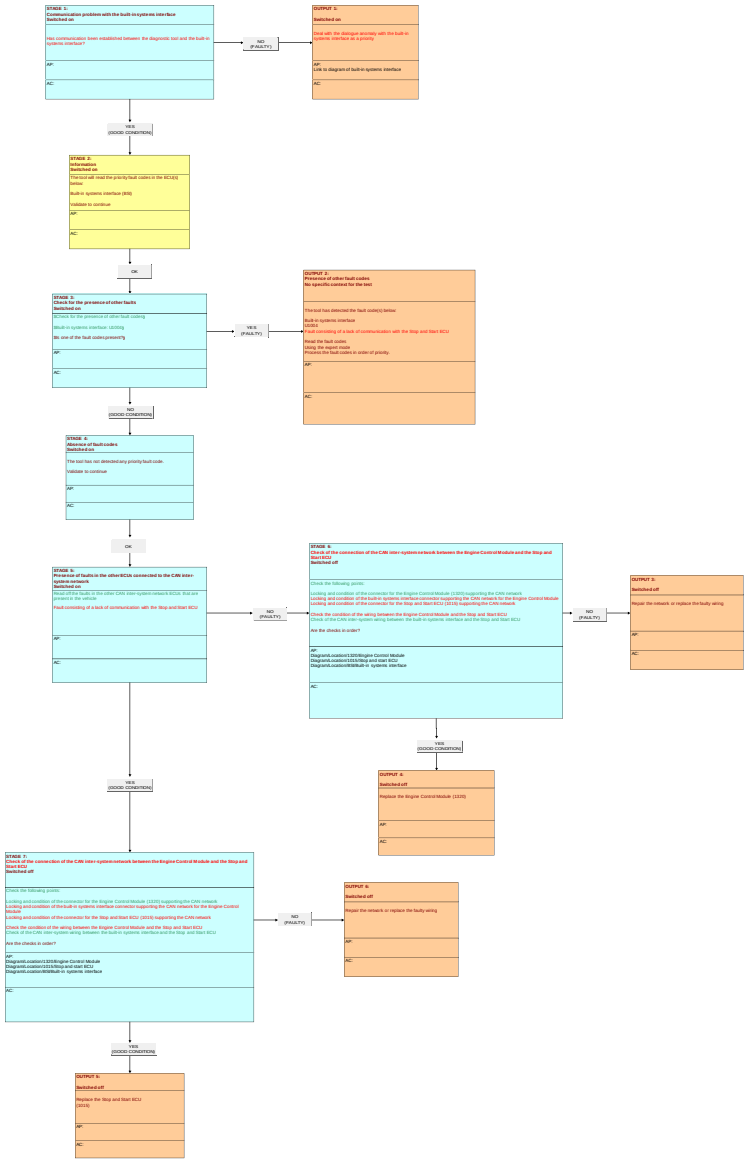

INFORMATION : FAULT CODE U1138 (ENGINE ECU)

Engine ECU CONTINENTAL SID 807 branch 2	
Fault code	U1138
After sales description of the fault code	Intersystems CAN : Absence of communication with the controlled clutch ECU
Description of the diagnostics	Faults in communication between ECUs on the CAN
Conditions of activation of the diagnostics	At least one of the following conditions must be fulfilled - Ignition switched on - With the engine running
Conditions of disappearance of the fault	Driving for 5 minutes
Down-grade modes if fault present	-
Switching on of the warning lamp and/or warning message	-
Main customer complaints likely	Jerking/stalling
	Starting problem
	Lack of power
Suspect areas	Engine ECU
	Intersystem CAN network

Fault code(s): U1138 or U1338

Reminder DTC

Do not fill in this section for the FLOW CHART phase

DTC no.	Aftersales text of the DTC	Fault type	Conditions for fault finding	Downgraded mode after a fault is ascertained	Illumination of warning light	Suspected areas Major control steps	The client effect(s)/symptom(s) associated with the DTCs	Fault code(s) to be dealt with before working through this flow chart	Tools required
U1138	CAN inter-system network: Lack of communication with the piloted clutch ECU	F							
U1338	CAN inter-system network: Length error or forbidden value of the framework output by the piloted clutch ECU	F							

PRE-CHECK

FLOW CHART Test procedure

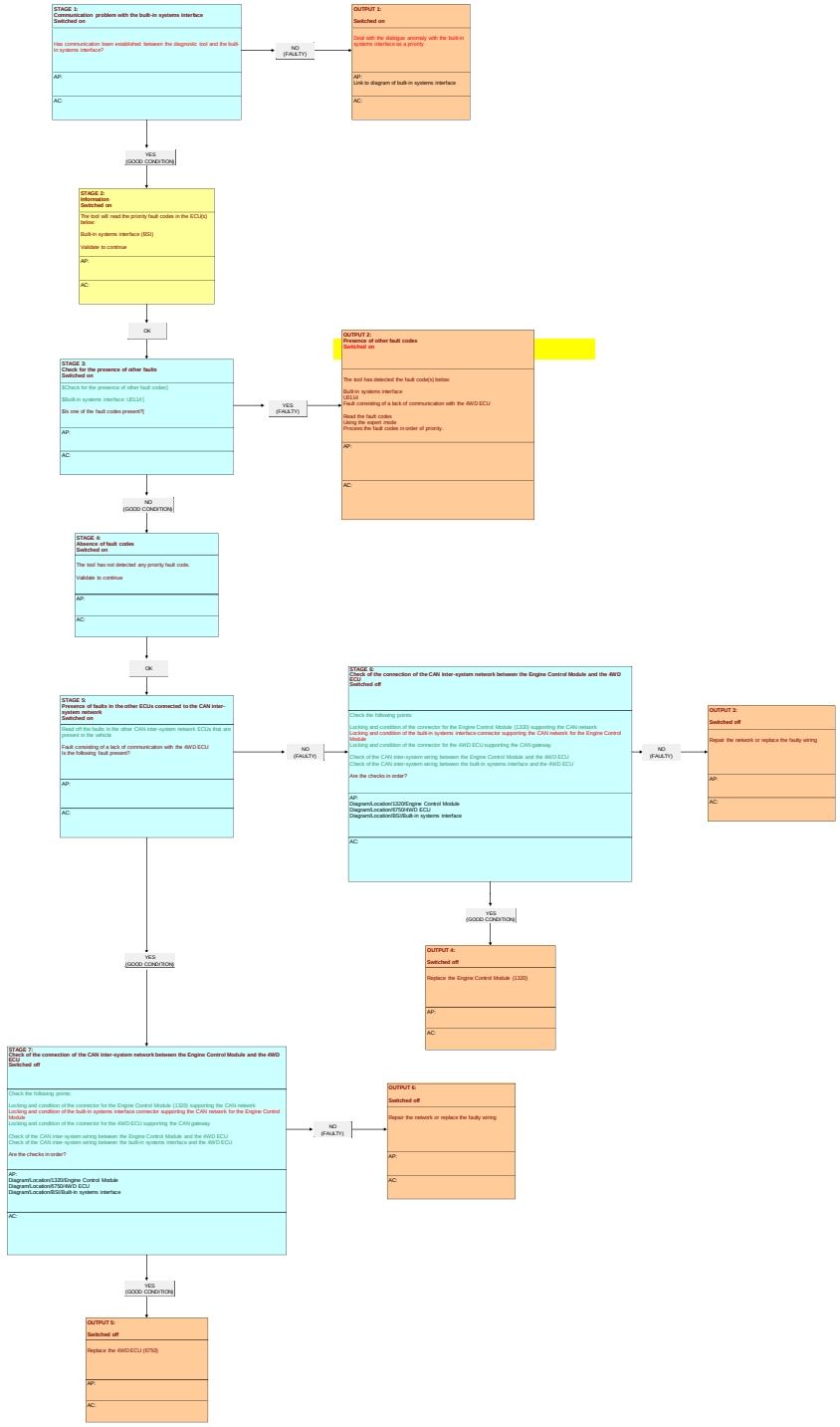

INFORMATION : FAULT CODE U1218 (ENGINE ECU)

SPECIAL FEATURE :

FOR : 1CMJ - B0FBM : DV6C TURBO DIESEL

FOR : 1PMJ - B0FBM : DV6C TURBO DIESEL

Engine ECU CONTINENTAL SID 807 branch 2	
Fault code	U1218
After sales description of the fault code	Intersystems CAN : One of the parameters present in a datastream sent by the BSI is invalid
Description of the diagnostics	Faults in communication between ECUs on the CAN network
Conditions of activation of the diagnostics	At least one of the following conditions must be fulfilled - Ignition switched on - Engine running
Conditions of disappearance of the fault	Driving for 5 minutes
Down-grade modes if fault present	-
Switching on of the warning lamp and/or warning message	-
Main customer complaints likely	Jerking/stalling
	Starting problem
	Lack of power
Suspect areas	Engine ECU
	Intersystem CAN network

Fault code(s): U0322 or U1218 or U1318 or P0070 or P0571

Reminder DTC

Do not fill in this section for the FLOW CHART phase

DTC n/a	Aftersales text of the DTC	Fault type	Conditions for fault finding	Downgraded mode after a fault is ascertained	Warning light on dashboard	Suspected areas Major control steps	The client effect(s)/symptom(s) associated with the DTCs	Fault code(s) to be dealt with before working through this flow chart	Tools required
U0322	CAN inter-system network: Length error or value forbidden by the BSI framework with an OBD impact	F							
U1218	CAN inter-system network: One of the parameters present in a framework output by the BSI is invalid	F							
U1318	CAN inter-system network: Length error or value forbidden by the BSI framework	F							
P0070	CAN inter-system network: Invalid value for the external air temperature received by the CAN	F							
P0571	CAN inter-system network: Erroneous information on the main brake output by the BSI	F							

PRE-CHECK

FLOW CHART Test procedure

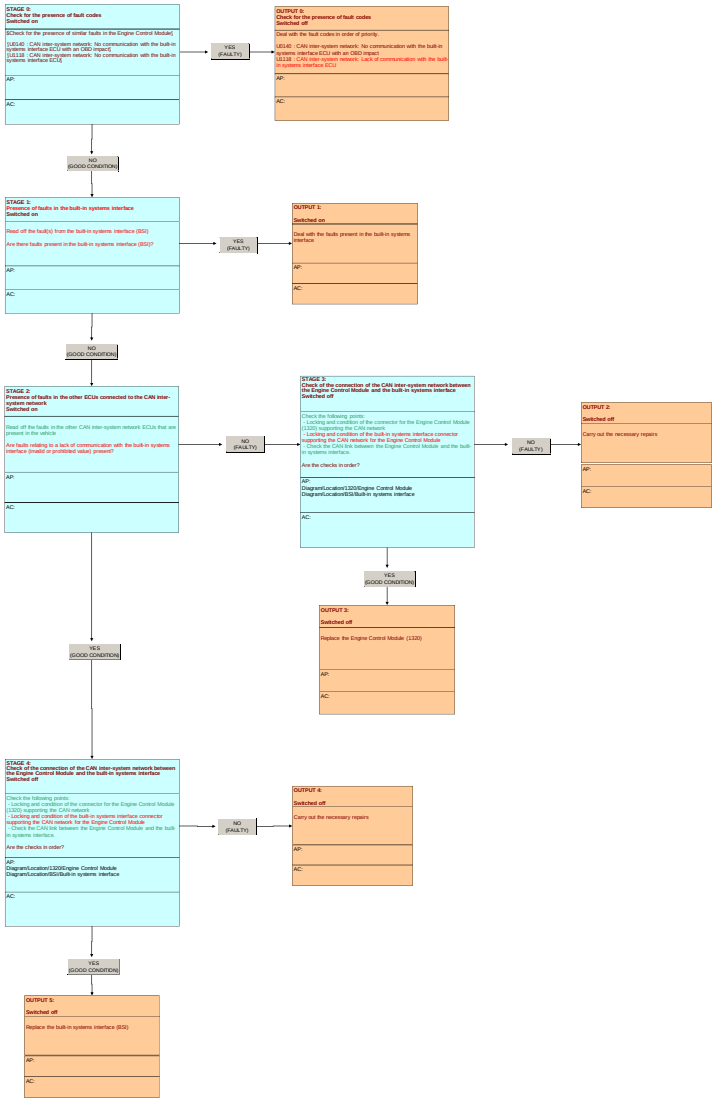

INFORMATION : FAULT CODE U1221 (ENGINE ECU)

Engine ECU CONTINENTAL SID 807 branch 2	
Fault code	U1221
After sales description of the fault code	Intersystems CAN : Prohibited value of the electric power steering datastream
Description of the diagnostics	Faults in communication between ECUs on the CAN network
Conditions of activation of the diagnostics	At least one of the following conditions must be fulfilled - Ignition switched on - Engine running
Conditions of disappearance of the fault	Driving for 5 minutes
Down-grade modes if fault present	-
Switching on of the warning lamp and/or warning message	-
Main customer complaints likely	Jerking/stalling
	Starting problem
	Lack of power
Suspect areas	Engine ECU
	Intersystem CAN network

Fault code(s): U1221

Reminder DTC

Do not fill in this section for the FLOW CHART phase

DTC no.	Aftersales text of the DTC	Fault type	Conditions for fault finding	Downgraded mode after a fault is ascertained	Warning light on or flashing	Suspected areas Major control steps	The client effect(s)/symptom(s) associated with the DTCs	Fault code(s) to be dealt with before working through this flow chart	Tools required
U1221	CAN inter-system network: Forbidden value from the electric power-assisted steering framework								

PRE-CHECK

FLOW CHART Test procedure

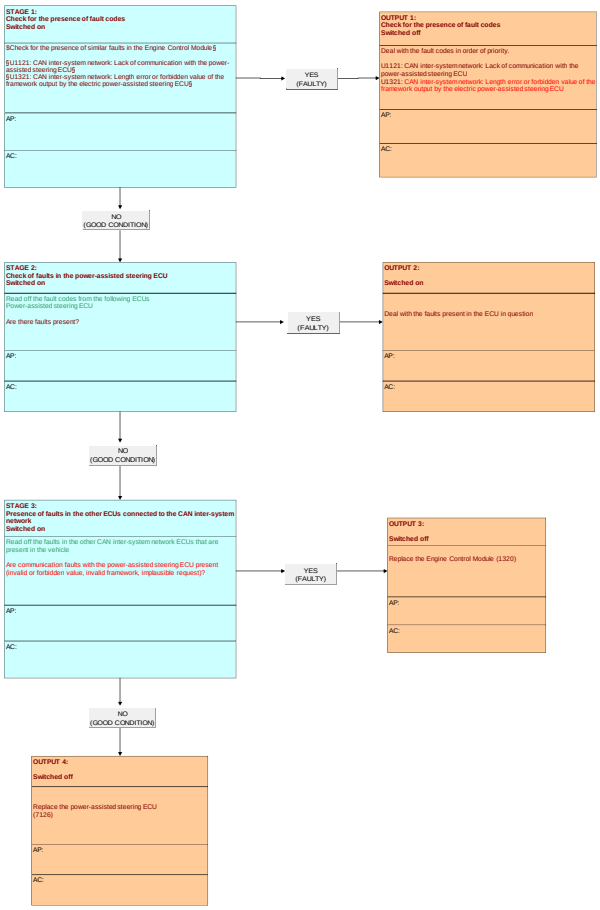

INFORMATION : FAULT CODE U1309 (ENGINE ECU)

SPECIAL FEATURE :

FOR : 1CB7 - B0FBM : DV6C TURBO DIESEL

FOR : 1CB8 - B0FBM : DV6C TURBO DIESEL

FOR : 1CXA - B0FBM : DV6C TURBO DIESEL

FOR : 1CX7 - B0FBM : DV6C TURBO DIESEL

FOR : 1CYA - B0FBM : DV6C TURBO DIESEL

FOR : 1C58 - B0FBM : DV6C TURBO DIESEL

FOR : 1PIA - B0FBM : DV6C TURBO DIESEL

FOR : 1PTB - B0FBM : DV6C TURBO DIESEL

FOR : 1PTC - B0FBM : DV6C TURBO DIESEL

FOR : 1PT7 - B0FBM : DV6C TURBO DIESEL

FOR : 1PW2 - B0FBM : DV6C TURBO DIESEL

FOR : 1CMJ - B0FBM : DV6C TURBO DIESEL

FOR : 1PMJ - B0FBM : DV6C TURBO DIESEL

Engine ECU CONTINENTAL SID 807 branch 2	
Fault code	U1309
After sales description of the fault code	Intersystems CAN : Error in length or prohibited value on the gearbox datastream
Description of the diagnostics	Faults in communication between ECUs on the CAN network
Conditions of activation of the diagnostics	At least one of the following conditions must be fulfilled - Ignition switched on - Engine running
Conditions of disappearance of the fault	Driving for 5 minutes
Down-grade modes if fault present	Automatic restarting impossible following stopping of the engine (Requires restarting of the engine using the key)
Switching on of the warning lamp and/or	-

warning message	
Main customer complaints likely	Jerking/stalling
	Starting problem
	Lack of power
Suspect areas	Engine ECU
	Intersystem CAN network

INFORMATION : FAULT CODE U1313 (ENGINE ECU)

SPECIAL FEATURE :

FOR : 1CB7 - B0FBM : DV6C TURBO DIESEL

FOR : 1CX7 - B0FBM : DV6C TURBO DIESEL

FOR : 1C58 - B0FBM : DV6C TURBO DIESEL

FOR : 1PT7 - B0FBM : DV6C TURBO DIESEL

FOR : 1PW2 - B0FBM : DV6C TURBO DIESEL

FOR : 1CB8 - B0FBM : DV6C TURBO DIESEL

FOR : 1CXA - B0FBM : DV6C TURBO DIESEL

FOR : 1CYA - B0FBM : DV6C TURBO DIESEL

FOR : 1PTB - B0FBM : DV6C TURBO DIESEL

FOR : 1PTC - B0FBM : DV6C TURBO DIESEL

FOR : 1PIA - B0FBM : DV6C TURBO DIESEL

FOR : 1CMJ - B0FBM : DV6C TURBO DIESEL

FOR : 1PMJ - B0FBM : DV6C TURBO DIESEL

Engine ECU CONTINENTAL SID 807 branch 2	
Fault code	U1313
After sales description of the fault code	Intersystems CAN : Error in length or prohibited value on the ABS/ESP datastream
Description of the diagnostics	Faults in communication between ECUs on the CAN network
Conditions of activation of the diagnostics	At least one of the following conditions must be fulfilled - Ignition switched on - Engine running
Conditions of disappearance of the fault	Driving for 5 minutes
	Irreversible deactivation of the vehicle speed curbing function
	Irreversible deactivation of the vehicle speed limiter
	Irreversible deactivation of the vehicle cruise

Down-grade modes if fault present	control
	Deactivation of the "easy-move" (electric parking brake) functionality
	For a gearbox with engine speed regulation (automatic gearbox or piloted manual gearbox), limitation of the torque sent to the gearbox
	Sticking of the air conditioning on an ESP fault
Switching on of the warning lamp and/or warning message	-
Main customer complaints likely	Jerking/stalling
	Starting problem
	Lack of power
Suspect areas	Engine ECU
	Intersystem CAN network

Fault code(s): U0315 or U1313 or P0500

Reminder DTC

Do not fill in this section for the FLOW CHART phase

DTC no.	Aftersales text of the DTC	Fault type	Conditions for fault finding	Downgraded mode after a fault is ascertained	Illumination or flashing light	Suspected areas Major control steps	The client effect(s)/symptom(s) associated with the DTCs	Fault code(s) to be dealt with before working through this flow chart	Tools required
U0315	CAN inter-system network: Length error or value forbidden by the ABS/ESP framework with an OBD impact	F							
U1313	CAN inter-system network: Length error or value forbidden by the ABS/ESP framework	F							
P0500	CAN inter-system network: Vehicle speed information incorrect or missing	F							

PRE-CHECK

FLOW CHART Test procedure

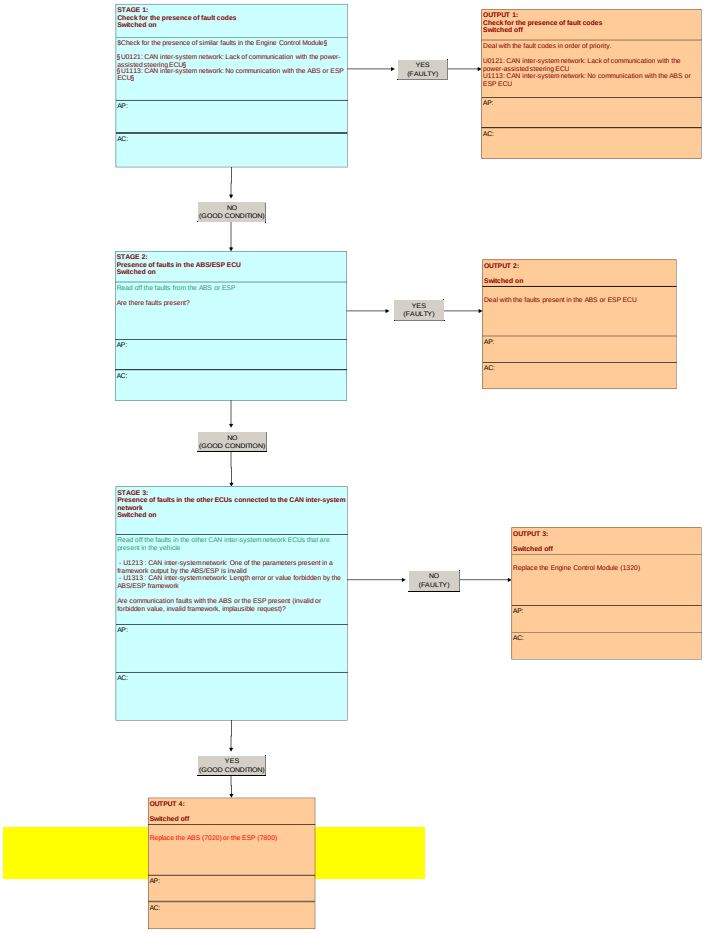

INFORMATION : FAULT CODE U1318 (ENGINE ECU)

SPECIAL FEATURE :

FOR : 1CMJ - B0FBM : DV6C TURBO DIESEL

FOR : 1PMJ - B0FBM : DV6C TURBO DIESEL

Engine ECU CONTINENTAL SID 807 branch 2	
Fault code	U1318
After sales description of the fault code	Intersystems CAN : Error in length or prohibited value on the BSI datastream
Description of the diagnostics	Faults in communication between ECUs on the CAN network
Conditions of activation of the diagnostics	At least one of the following conditions must be fulfilled - Ignition switched on - Engine running
Conditions of disappearance of the fault	Driving for 5 minutes
Down-grade modes if fault present	Reversible deactivation of the vehicle speed limiter
	Reversible deactivation of the limiting of the vehicle speed
	Reversible deactivation of the vehicle cruise control
Switching on of the warning lamp and/or warning message	-
Main customer complaints likely	Jerking/stalling
	Starting problem
	Lack of power
Suspect areas	Engine ECU
	Intersystem CAN network

Fault code(s): U0322 or U1218 or U1318 or P0070 or P0571

Reminder DTC

Do not fill in this section for the FLOW CHART phase

DTC n/a	Aftersales text of the DTC	Fault type	Conditions for fault finding	Downgraded mode after a fault is ascertained	Malfunction indicator lamp	Suspected areas Major control steps	The client effect(s)/symptom(s) associated with the DTCs	Fault code(s) to be dealt with before working through this flow chart	Tools required
U0322	CAN inter-system network: Length error or value forbidden by the BSI framework with an OBD impact	F							
U1218	CAN inter-system network: One of the parameters present in a framework output by the BSI is invalid	F							
U1318	CAN inter-system network: Length error or value forbidden by the BSI framework	F							
P0070	CAN inter-system network: Invalid value for the external air temperature received by the CAN	F							
P0571	CAN inter-system network: Erroneous information on the main brake output by the BSI	F							

PRE-CHECK

FLOW CHART Test procedure

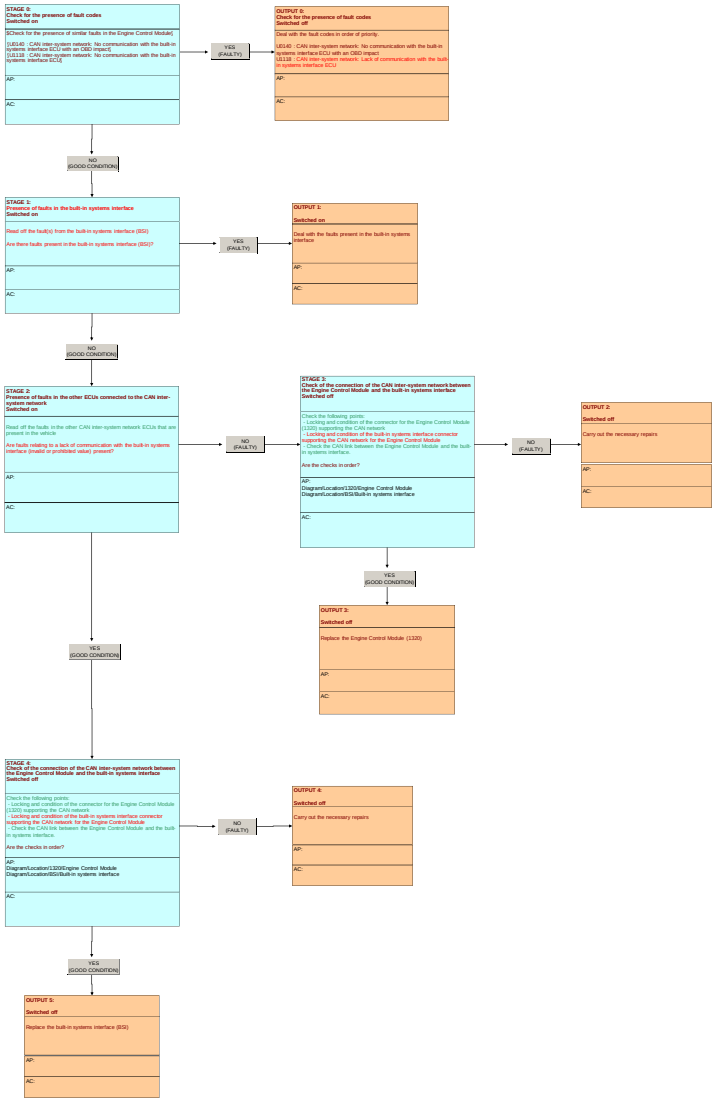

INFORMATION : FAULT CODE U1321 (ENGINE ECU)

SPECIAL FEATURE :

FOR : 1CMJ - B0FBM : DV6C TURBO DIESEL

FOR : 1PMJ - B0FBM : DV6C TURBO DIESEL

Engine ECU CONTINENTAL SID807 branch 2	
Fault code	U1321
After sales description of the fault code	Intersystems CAN : Error of length or prohibited value of the datastream transmitted by the electric power steering ECU
Description of the diagnostics	Faults in communication between ECUs on the CAN network
Conditions of activation of the diagnostics	At least one of the following conditions must be fulfilled - Ignition on - Engine running
Conditions of disappearance of the fault	Driving for 5 minutes
Down-grade modes if fault present	-
Switching on of the warning lamp and/or warning message	-
Main customer complaints likely	Engine hesitating, cutting out
	Lack of power
	Starting problem
Suspect areas	Engine ECU
	Intersystem CAN network

Fault code(s): U1121 or U1321

Reminder DTC

Do not fill in this section for the FLOW CHART phase

DTC n/a	Aftersales text of the DTC	Fault type	Conditions for fault finding	Downgraded mode after a fault is ascertained	Warning lamp(s) on dashboard	Suspected areas Major control steps	The client effect(s)/symptom(s) associated with the DTCs	Fault code(s) to be dealt with before working through this flow chart	Tools required
U1121	CAN inter-system network: Lack of communication with the power-assisted steering ECU	F							
U1321	CAN inter-system network: Length error or forbidden value of the framework output by the electric power-assisted steering ECU	F							

PRE-CHECK

FLOW CHART Test procedure

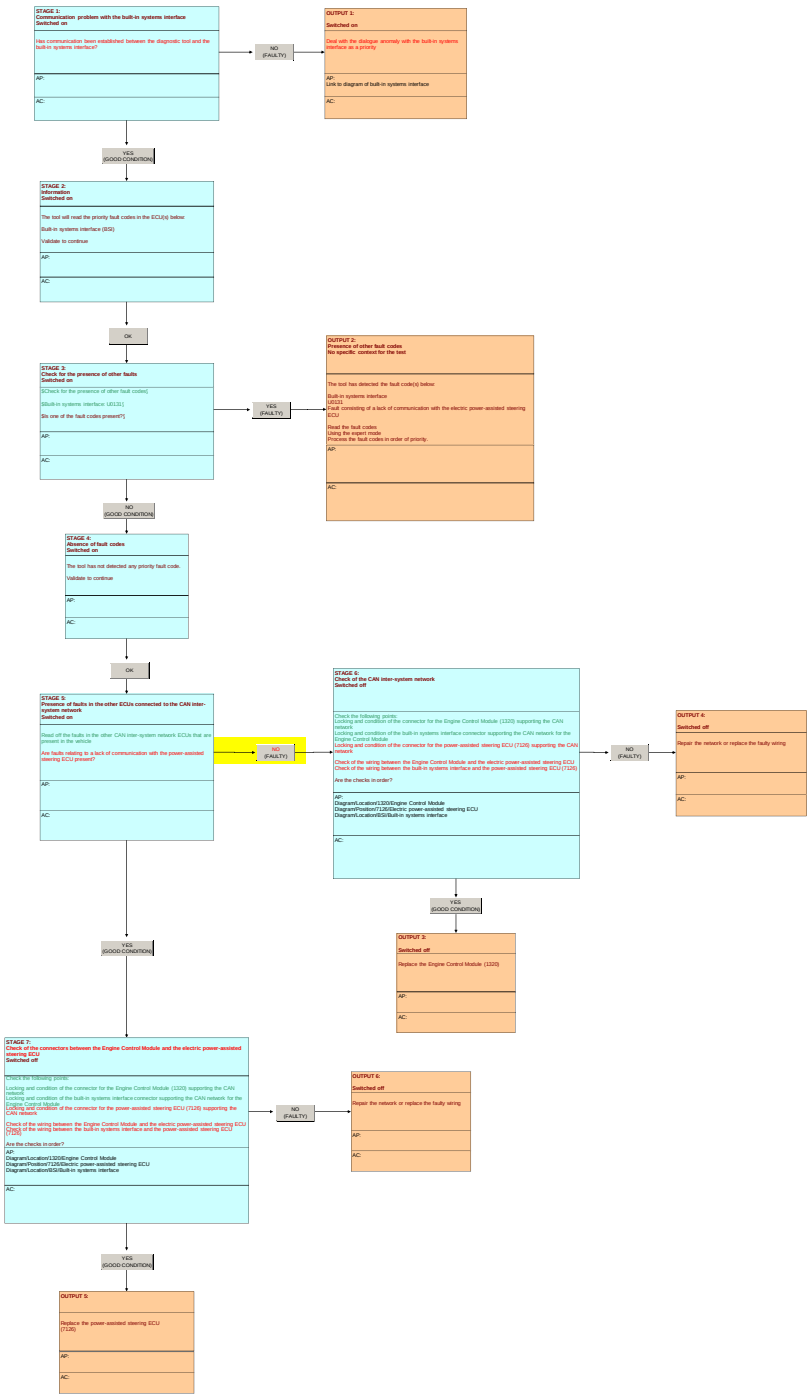

INFORMATION : FAULT CODE U1333 (ENGINE ECU)

SPECIAL FEATURE :

FOR : 1CMJ - B0FBM : DV6C TURBO DIESEL

FOR : 1PMJ - B0FBM : DV6C TURBO DIESEL

Engine ECU CONTINENTAL SID 807 branch 2	
Fault code	U1333
After sales description of the fault code	LIN : Error in length or prohibited value of the data from the voltage retention device
Description of the diagnostics	Faults in communication between ECUs on the LIN
Conditions of activation of the diagnostics	Ignition switched on
Conditions of disappearance of the fault	Ignition switched on
Down-grade modes if fault present	Automatic restarting impossible following stopping of the engine (Requires restarting of the engine using the key)
Switching on of the warning lamp and/or warning message	"SERVICE" warning lamp
Main customer complaints likely	Problem with automatic restarting of the internal combustion engine
	Absence of automatic stopping of the internal combustion engine
	Malfunction of the Stop and Start switch or its LED
	Jerking/stalling
	Starting problem
	Lack of power
Suspect areas	LIN

Fault code(s): U1133 or U1333

Reminder DTC

Do not fill in this section for the FLOW CHART phase

DTC no.	Aftersales text of the DTC	Fault type	Conditions for fault finding	Downgraded mode after a fault is ascertained	Driving safety warning light	Suspected areas Major control loops	The client effect(s)/symptom(s) associated with the DTC(s)	Fault code(s) to be dealt with before working through this flow chart	Tools required
U1133	CAN inter-system network: Lack of communication with the Stop and Start ECU	0							
U1333	CAN inter-system network: Length error or forbidden value of the framework output by the Stop and Start ECU	0							

PRE-CHECK

FLOW CHART Test procedure

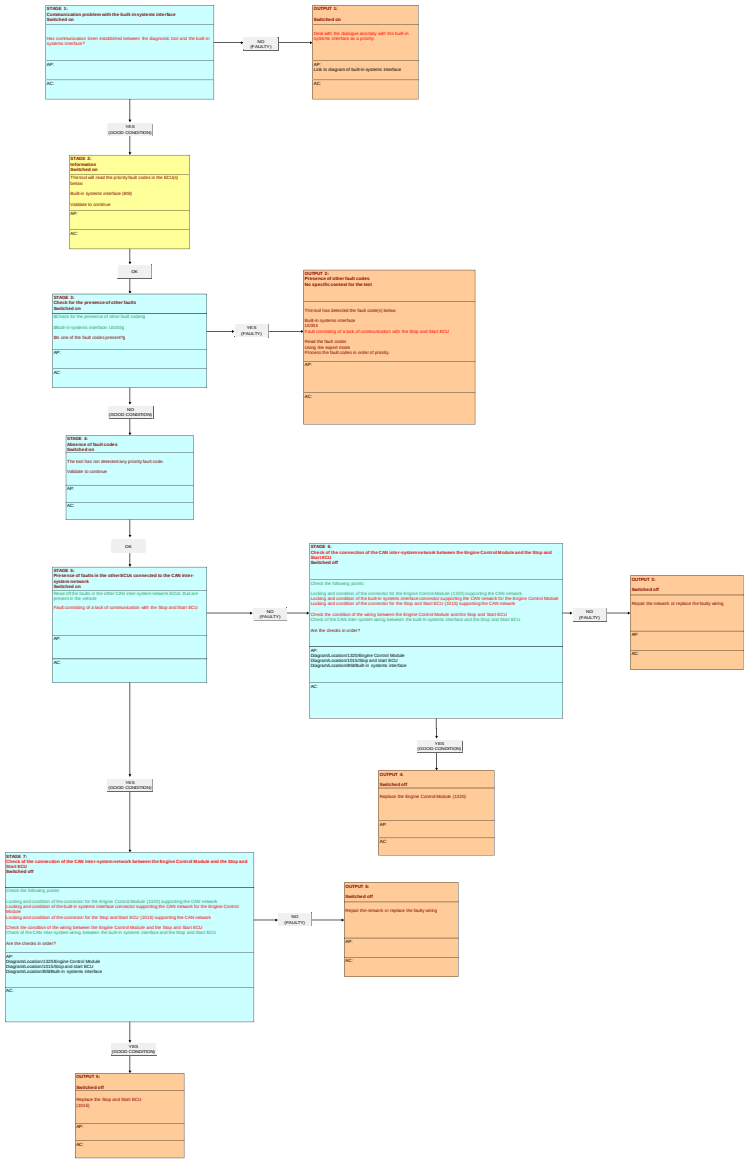

INFORMATION : FAULT CODE U1338 (ENGINE ECU)

Engine ECU CONTINENTAL SID 807 branch 2	
Fault code	U1338
After sales description of the fault code	Intersystems CAN : Error of length or prohibited value of the datastream transmitted by the controlled clutch ECU
Description of the diagnostics	Faults in communication between ECUs on the CAN
Conditions of activation of the diagnostics	At least one of the following conditions must be fulfilled - Ignition switched on - With the engine running
Conditions of disappearance of the fault	Driving for 5 minutes
Down-grade modes if fault present	-
Switching on of the warning lamp and/or warning message	-
Main customer complaints likely	Jerking/stalling
	Starting problem
	Lack of power
Suspect areas	Engine ECU
	Intersystem CAN network

Fault code(s): U1138 or U1338

Reminder DTC

Do not fill in this section for the FLOW CHART phase

DTC no.	Aftersales text of the DTC	Fault type	Conditions for fault finding	Downgraded mode after a fault is ascertained	Fault indicator lamp (MIL) activation	Suspected areas Major control steps	The client effect(s)/symptom(s) associated with the DTCs	Fault code(s) to be dealt with before working through this flow chart	Tools required
U1138	CAN inter-system network: Lack of communication with the piloted clutch ECU	F							
U1338	CAN inter-system network: Length error or forbidden value of the framework output by the piloted clutch ECU	F							

PRE-CHECK

FLOW CHART Test procedure

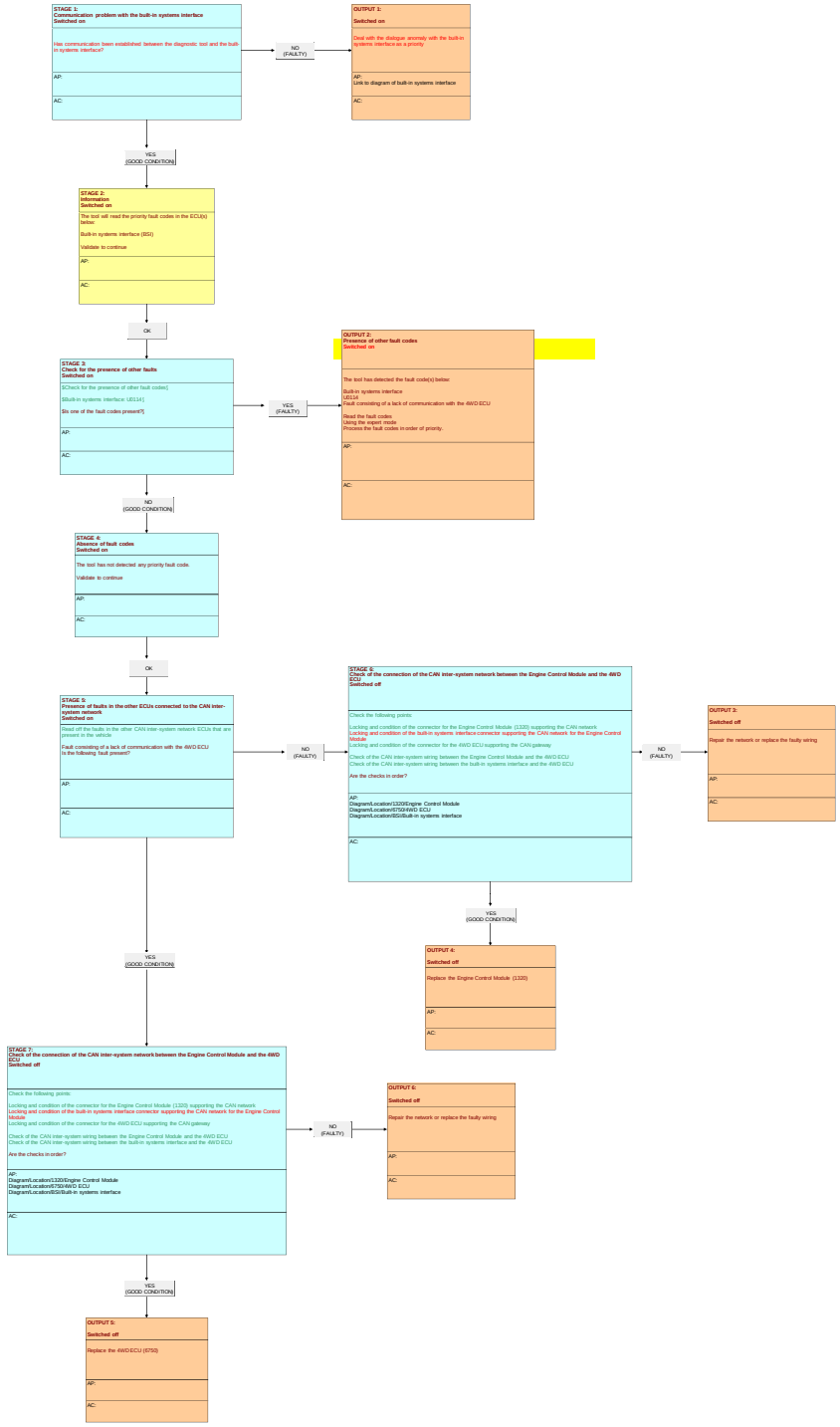

INFORMATION : FAULT CODE U1400 (ENGINE ECU)

SPECIAL FEATURE :

FOR : 1CB7 - B0FBM : DV6C TURBO DIESEL

FOR : 1CX7 - B0FBM : DV6C TURBO DIESEL

FOR : 1C58 - B0FBM : DV6C TURBO DIESEL

FOR : 1PT7 - B0FBM : DV6C TURBO DIESEL

FOR : 1PW2 - B0FBM : DV6C TURBO DIESEL

FOR : 1CB8 - B0FBM : DV6C TURBO DIESEL

FOR : 1CXA - B0FBM : DV6C TURBO DIESEL

FOR : 1CYA - B0FBM : DV6C TURBO DIESEL

FOR : 1PTB - B0FBM : DV6C TURBO DIESEL

FOR : 1PTC - B0FBM : DV6C TURBO DIESEL

FOR : 1PIA - B0FBM : DV6C TURBO DIESEL

FOR : 1CMJ - B0FBM : DV6C TURBO DIESEL

FOR : 1PMJ - B0FBM : DV6C TURBO DIESEL

Engine ECU CONTINENTAL SID 807 branch 2	
Fault code	U1400
After sales description of the fault code	Alternator LIN network : Registering of a fault on the LIN network
Description of the diagnostics	Faults in communication between ECUs on the LIN
Conditions of activation of the diagnostics	At least one of the following conditions must be fulfilled - Ignition switched on - Engine running
Conditions of disappearance of the fault	Driving for 5 minutes
Down-grade modes if fault present	Automatic restarting impossible following stopping of the engine (Requires restarting of the engine using the ignition key)
Switching on of the warning lamp and/or	"SERVICE" warning lamp

warning message	
Main customer complaints likely	Jerking/stalling
	Starting problem
	Lack of power
	No automatic stopping of the internal combustion engine (Vehicle equipped with "stop and start")
	Problem with automatic restarting of the internal combustion engine (Vehicle equipped with "stop and start")
	Malfunction of the Stop and Start switch or its LED (Vehicle equipped with "stop and start")
Suspect areas	Engine ECU
	LIN
	Alternator

Fault code(s): P0620 or P065A or P0A1A or P0A3B or U1400 or U1401

Reminder DTC

Do not fill in this section for the FLOW CHART phase

DTC no.	Alternates text of the DTC	Walk type	Conditions for fault finding	Downgraded mode after a fault is ascertained	Do not start the engine	Suspected areas Major control steps	The client effect(s)/symptom(s) associated with the DTC(s)	Fault code(s) to be dealt with before working through this flow chart	Tools required
P0620	Alternator: Electrical fault	no							
P065A	Alternator: Mechanical fault	no							
P0A1A	Alternator: Alternator communication fault	no							
P0A3B	Alternator: Temperature fault	no							
U1400	Alternator: LIN network: Missed cut a fault in the LIN network								
U1401	Alternator: LIN network: Missed cut a fault in a slave node of the alternator LIN network								

PRE-CHECK

FLOW CHART Test procedure

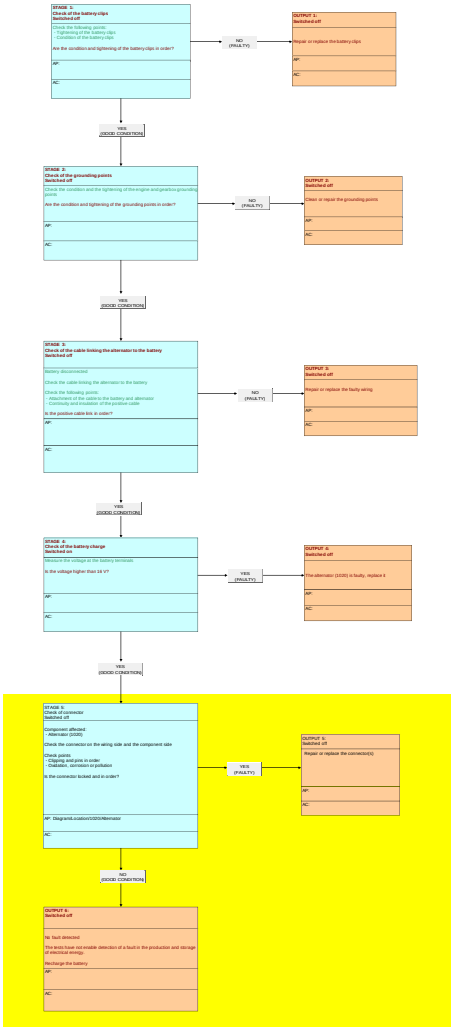

INFORMATION : FAULT CODE U1401 (ENGINE ECU)

SPECIAL FEATURE :

FOR : 1CB7 - B0FBM : DV6C TURBO DIESEL

FOR : 1CX7 - B0FBM : DV6C TURBO DIESEL

FOR : 1C58 - B0FBM : DV6C TURBO DIESEL

FOR : 1PT7 - B0FBM : DV6C TURBO DIESEL

FOR : 1PW2 - B0FBM : DV6C TURBO DIESEL

FOR : 1CB8 - B0FBM : DV6C TURBO DIESEL

FOR : 1CXA - B0FBM : DV6C TURBO DIESEL

FOR : 1CYA - B0FBM : DV6C TURBO DIESEL

FOR : 1PTB - B0FBM : DV6C TURBO DIESEL

FOR : 1PTC - B0FBM : DV6C TURBO DIESEL

FOR : 1PIA - B0FBM : DV6C TURBO DIESEL

FOR : 1CMJ - B0FBM : DV6C TURBO DIESEL

FOR : 1PMJ - B0FBM : DV6C TURBO DIESEL

Engine ECU CONTINENTAL SID 807 branch 2	
Fault code	U1401
After sales description of the fault code	Alternator LIN network : Registering of a fault on the slave node of the alternator LIN network
Description of the diagnostics	Faults in communication between ECUs on the LIN
Conditions of activation of the diagnostics	At least one of the following conditions must be fulfilled - Ignition switched on - Engine running
Conditions of disappearance of the fault	Driving for 5 minutes
Down-grade modes if fault present	-
Switching on of the warning lamp and/or warning message	-

Main customer complaints likely	Jerking/stalling
	Starting problem
	Lack of power
Suspect areas	Engine ECU
	LIN network
	Alternator

Fault code(s): P0620 or P065A or P0A1A or P0A3B or U1400 or U1401

Reminder DTC

Do not do this section for the FLOW CHART phase

DTC no.	Alternates text of the DTC	Walk type	Conditions for fault finding	Downgraded mode after a fault is ascertained	Fault warning lamp on	Suspected areas Major control steps	The client effect(s)/symptom(s) associated with the DTC(s)	Fault code(s) to be dealt with before working through this flow chart	Tools required
P0620	Alternator: Electrical fault	no							
P065A	Alternator: Mechanical fault	no							
P0A1A	Alternator: Alternator communication fault	no							
P0A3B	Alternator: Temperature fault	no							
U1400	Alternator: LIN network: Recovid of a fault in the LIN network								
U1401	Alternator: LIN network: Recovid of a fault in a slave node of the alternator LIN network								

PRE-CHECK
FLOW CHART Test procedure

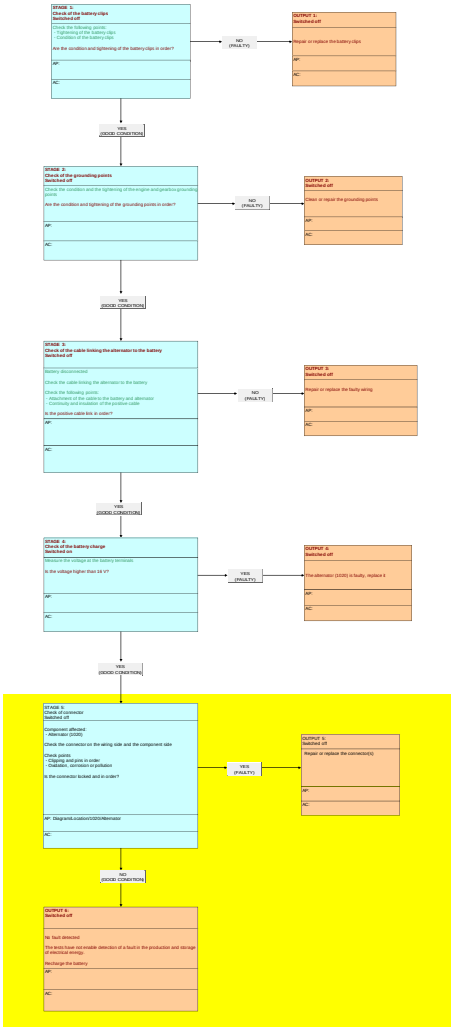

INFORMATION : FAULT CODE B1301 (STOP AND START ECU)

Stop and Start ECU	
Fault code	B1301
After sales description of the fault code	CC/CC converter circuit : Electrical fault
Description of the diagnostics	Electrical fault detected for 5 s
Conditions of activation of the diagnostics	Ignition on
Conditions of disappearance of the fault	Ignition on
Down-grade modes if fault present	-
Switching on of the warning lamp and/or warning message	-
Main customer complaints likely	Audio equipment reinitialised
	Sound cut off during automatic starting
Suspect areas	Electrical harnesses
	Electrical circuit (Vehicle)
	Battery
	CC/CC converter
	Stop and Start ECU

Fault code(s): B1301 or B1302

Reminder DTC

Do not fill in this section for the FLOW CHART phase

DTC no.	Aftersales text of the DTC	Fault type	Conditions for fault finding	Downgraded mode after a fault is memorised	Driver warning lamp	Suspected areas Major control loops	The client «TN-DEX(symptom)» associated with the DTCs	Fault code(s) to be dealt with before working through this flow chart	Tools required
B1301	Malfunction of the electrical converter	Hard	Key-and- Start						
B1302	Malfunction of the electrical converter system	Hard	Key-and- Start						

PRE-CHECK
FLOW CHART Test procedure

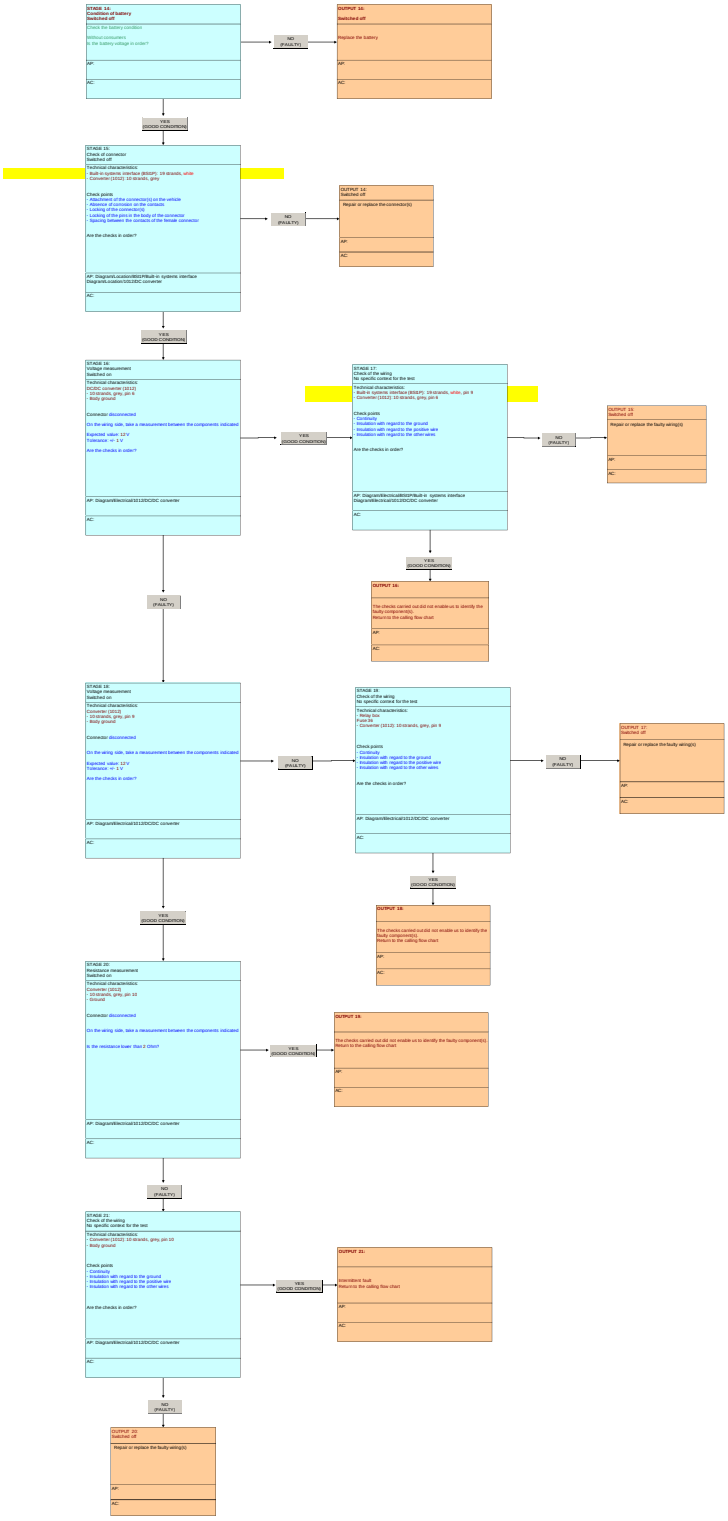

INFORMATION : FAULT CODE B1302 (STOP AND START ECU)

Stop and Start ECU	
Fault code	B1302
After sales description of the fault code	CC/CC converter : Electrical fault
Description of the diagnostics	Electrical fault detected for 5 s
Conditions of activation of the diagnostics	Ignition on
Conditions of disappearance of the fault	Ignition on
Down-grade modes if fault present	-
Switching on of the warning lamp and/or warning message	-
Main customer complaints likely	Audio equipment reinitialised
	Sound cut off during automatic starting
Suspect areas	Electrical harnesses
	Electrical circuit (Vehicle)
	Battery
	CC/CC converter
	Stop and Start ECU

Fault code(s): B1301 or B1302

Reminder DTC

Do not fill in this section for the FLOW CHART phase

DTC no.	Aftersales text of the DTC	Fault type	Conditions for fault finding	Downgraded mode after a fault is memorised	Lamp or warning light	Suspected areas Major control loops	The client «TM-DEX(symptom)» associated with the DTCs	Fault code(s) to be dealt with before working through this flow chart	Faults required
B1301	Malfunction of the electrical converter	Hard	Key-and- Start						
B1302	Malfunction of the electrical converter system	Hard	Key-and- Start						

PRE-CHECK

FLOW CHART Test procedure

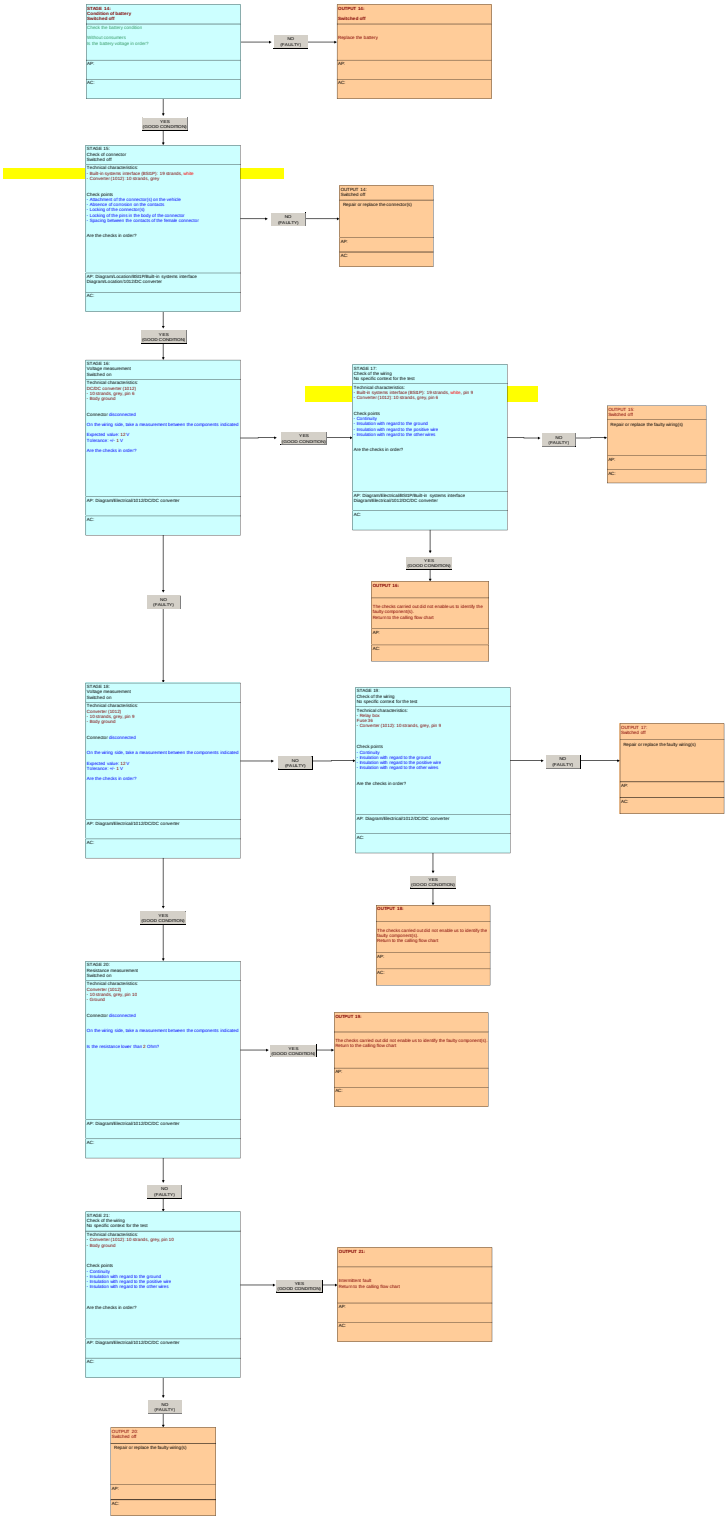

INFORMATION : FAULT CODE C0047 (STOP AND START ECU)

Stop and Start ECU	
Fault code	C0047
After sales description of the fault code	Brake vacuum sensor circuit : Electrical fault
Description of the diagnostics	Voltage more than 4,8 V or voltage less than 0,3 V for at least 2 s
Conditions of activation of the diagnostics	At least one of the following conditions must be fulfilled - Ignition on - With the engine running
Conditions of disappearance of the fault	At least one of the following conditions must be fulfilled - Ignition on - With the engine running
Down-grade modes if fault present	-
Switching on of the warning lamp and/or warning message	-
Main customer complaints likely	No automatic stopping
	Problem with lighting of the AS&G warning lamp on the instrument panel
Suspect areas	Brake vacuum sensor
	Stop and Start ECU

Fault code(s): C0047

Reminder DTC

Do not fill in this section for the FLOW CHART phase

DTC no.	Aftersales text of the DTC	Fault type	Conditions for fault finding	Downgraded mode after a fault is ascertained	Driver warning lamp	Suspected areas Major control steps	The client eTech2(Symptom(s) associated with the DTC)	Fault code(s) to be dealt with before working through this flow chart	Tools required
C0047	Brake vacuum sensor circuit: Electrical fault		Stop and Start						

PRE-CHECK

FLOW CHART Test procedure

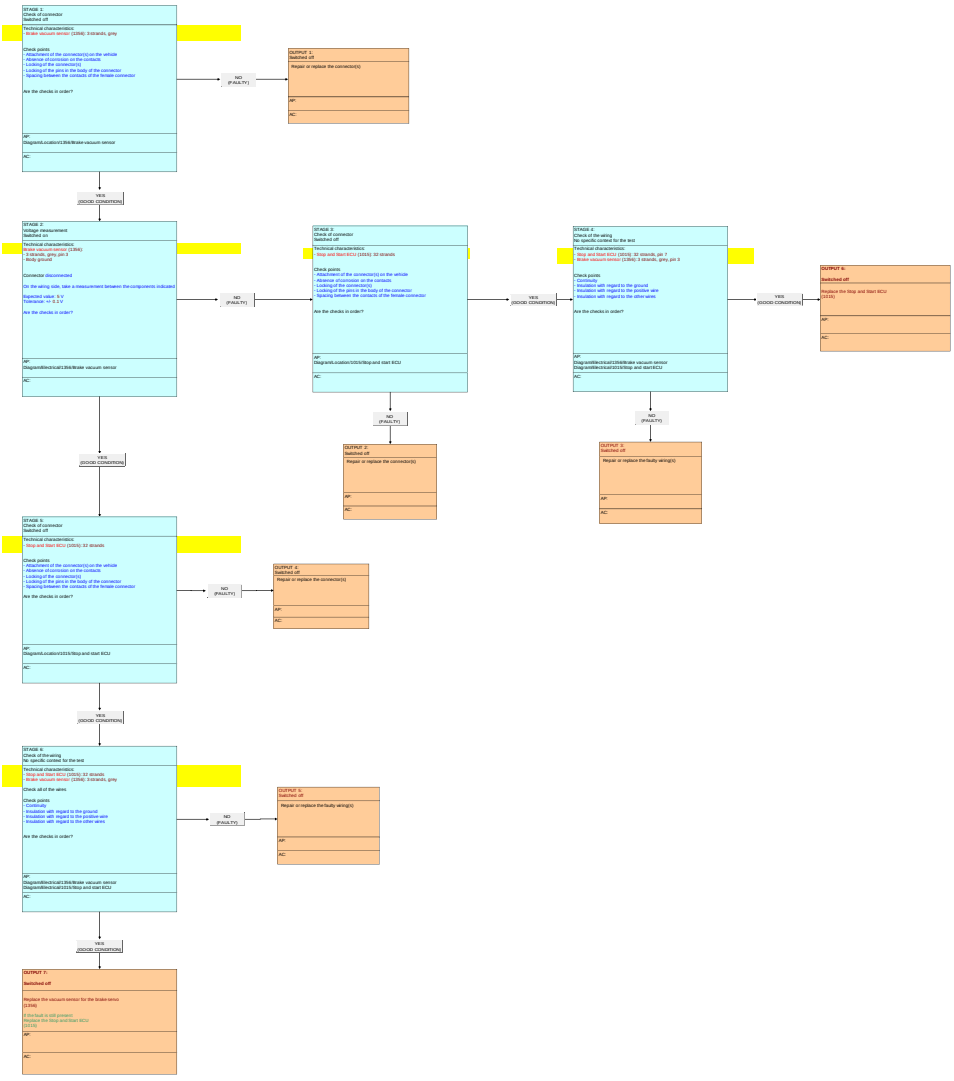

INFORMATION : FAULT CODE C1101 (STOP AND START ECU)

Stop and Start ECU	
Fault code	C1101
After sales description of the fault code	Atmospheric pressure sensor circuit : Electrical fault
Description of the diagnostics	Voltage more than 4,7 V or voltage less than 0,3 V for at least 2 s
Conditions of activation of the diagnostics	At least one of the following conditions must be fulfilled - Ignition on - With the engine running
Conditions of disappearance of the fault	At least one of the following conditions must be fulfilled - Ignition on - With the engine running
Down-grade modes if fault present	-
Switching on of the warning lamp and/or warning message	-
Main customer complaints likely	No automatic stopping
	Problem with lighting of the AS&G warning lamp on the instrument panel
Suspect areas	Stop and Start ECU

Fault code(s): C1101

Reminder DTC

Do not fill in this section for the FLOW CHART phase

DTC no.	Aftersales text of the DTC	Fault type	Conditions for fault finding	Downgraded mode after a fault is ascertained	Does it all stop of warning light	Suspected areas Major control steps	The client effect(s)/symptom(s) associated with the DTCs	Fault code(s) to be dealt with before working through this flow chart	Tools required
C1101	Atmospheric pressure sensor circuit: Electrical fault		Stop and Start						
					SERVICE				

PRE-CHECK

FLOW CHART Test procedure

OUTPUT 1:

Switched off

Replace the Stop and Start ECU (101S)

AP:

AC:

INFORMATION : FAULT CODE P081D (STOP AND START ECU)

Stop and Start ECU	
Fault code	P081D
After sales description of the fault code	Circuit of the neutral position switch : No variations in the signal
Description of the diagnostics	Electrical fault. No change in the signal from the neutral position switch even though the signal from the clutch interlocking switch has been detected
Conditions of activation of the diagnostics	At least one of the following conditions must be fulfilled - Ignition switched on - Ambient temperature above -5 °C - Absence of the fault code P0833
Conditions of disappearance of the fault	The following conditions have to be met - Driving for 5 min and changing through the gears several times - Vehicle speed higher than 60 km/h
Down-grade modes if fault present	During normal operation, automatic stopping is prohibited
Switching on of the warning lamp and/or warning message	-
Main customer complaints likely	No automatic stopping
	Problem with lighting of the AS&G warning lamp on the instrument panel
Suspect areas	Neutral position switch
	Electrical harnesses
	Connectors
	Stop and Start ECU

Fault code(s): P081D

Reminder DTC

DTC no	Abbreviation, text of the DTC	As soon as Ambient conditions for fault finding	Aborting/stored event after a fault is ascertained	Fault memory entry	Suspected area Major control steps	The Volvo-lifestyle/systems/ components associated with the DTCs	Fault entry(s) to be dealt with before working through this flow chart	Tools required
P081D	Neutral position switch (clutch) (distance of signal variation)	Time and Date						

FOLLOW CHECK

FLOW CHART Test procedure

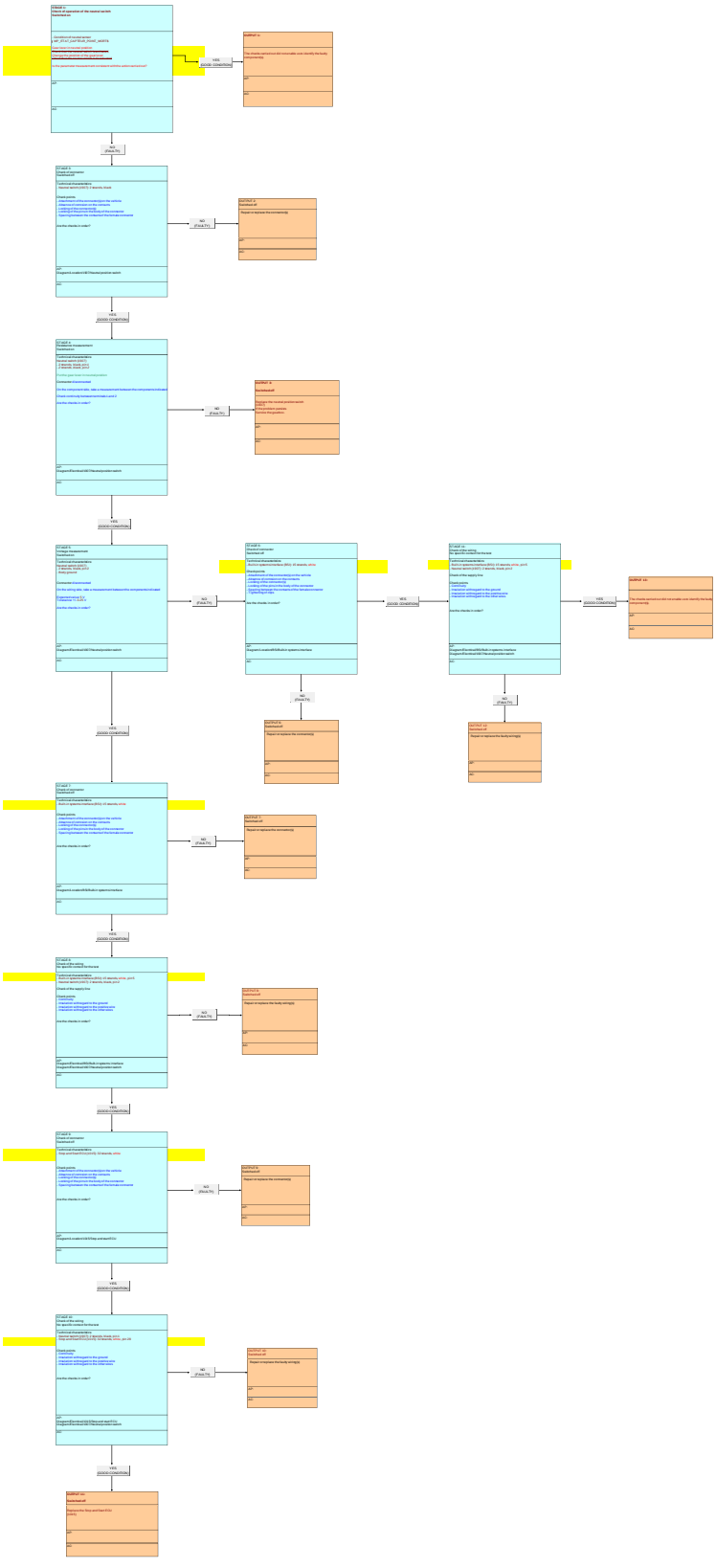

INFORMATION : FAULT CODE P0830 (STOP AND START ECU)

Stop and Start ECU	
Fault code	P0830
After sales description of the fault code	Circuit of the clutch pedal upper switch : No variations in the signal
Description of the diagnostics	Electrical fault. No change in the signal from the clutch monitoring switch during driving
Conditions of activation of the diagnostics	Ignition on
Conditions of disappearance of the fault	The following conditions have to be met - Driving for 5 min and changing through the gears several times - Vehicle speed higher than 30 km/h
Down-grade modes if fault present	During normal operation, automatic stopping is prohibited
Switching on of the warning lamp and/or warning message	-
Main customer complaints likely	No automatic stopping
	Problem with lighting of the AS&G warning lamp on the instrument panel
Suspect areas	Clutch monitoring switch
	Clutch pedal
	Electrical harnesses
	Connectors
	Stop and Start ECU

Fault code(s): P0830

Remember DTC

Do not clear any data mentioned on the FLOW CHART phase

DTC set	Alternative level of the DTC	Level	Conditions for fault finding	Storing/updated event after a fault is ascertained	Level of DTC	Suspected area Major incorrect steps	The client effects(s) symptom(s) associated with the DTC	Check route(s) to be dealt with before working through this flow chart	Tools required
P0830	Clutch monitoring switch circuit: absence of signal condition		Key-on and Start						

PRE-CHECK

FLOW CHART Test procedure

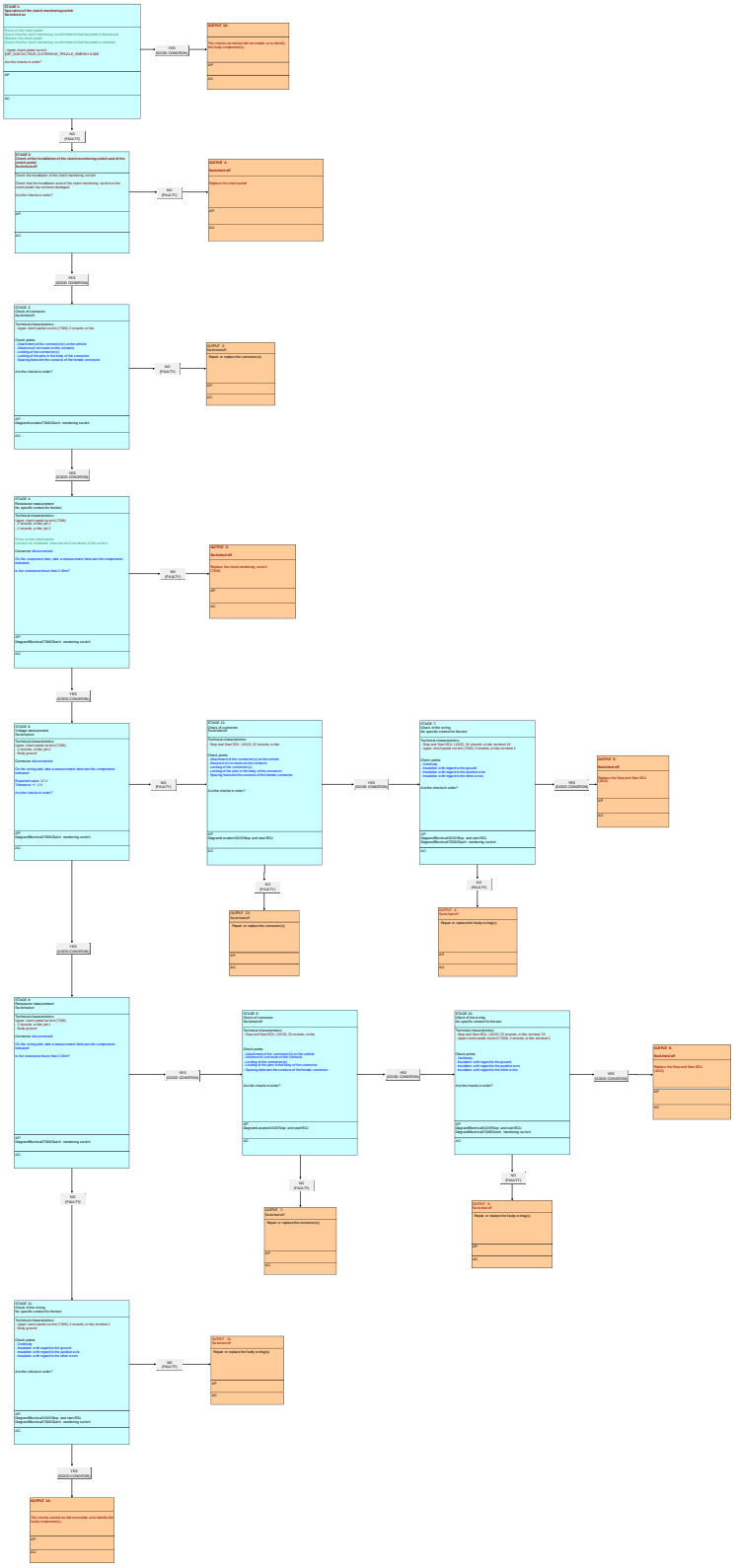

INFORMATION : FAULT CODE P0833 (STOP AND START ECU)

Stop and Start ECU	
Fault code	P0833
After sales description of the fault code	Circuit of the clutch pedal lower switch : No variations in the signal
Description of the diagnostics	Electrical fault. No change in the signal from the clutch interlocking switch during driving
Conditions of activation of the diagnostics	Ignition switched on
Conditions of disappearance of the fault	The following conditions have to be met - Driving for 5 min and changing through the gears several times - Vehicle speed higher than 30 km/h
Down-grade modes if fault present	During normal operation, automatic stopping is prohibited
Switching on of the warning lamp and/or warning message	-
Main customer complaints likely	No automatic stopping
	Problem with lighting of the AS&G warning lamp on the instrument panel
Suspect areas	Clutch interlocking switch
	Clutch pedal
	Electrical harnesses
	Connectors
	Stop and Start ECU

Fault code(s): P0833

Reminder DTC

DTC no.	Alternate text of the DTC	Do not fill in this section for the FLOW CHART phase: Fault code	Conditions for fault finding	Discriminated multi-alim' a fault is memorised	Driver warning light	Suspected areas Major control steps	The client offers(Engine/body) associated with the DTCs	Fault code(s) to be dealt with before working through this flow chart	Tools required
P0833	Clutch interlock switch circuit: absence of signal variation		Stop and Start						

PRE-CHECK

FLOW CHART Test procedure

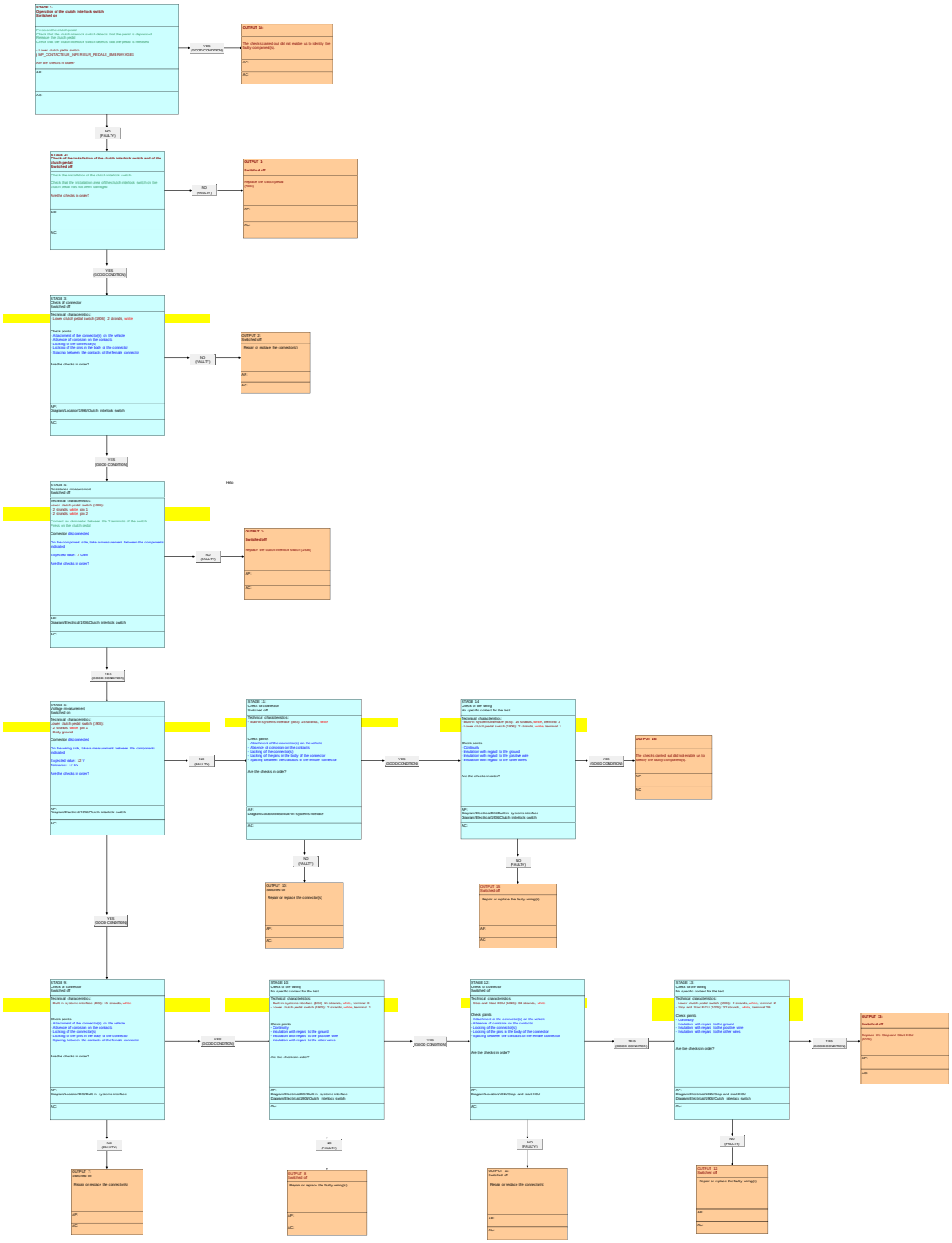

INFORMATION : FAULT CODE U0001 (STOP AND START ECU)

Stop and Start ECU	
Fault code	U0001
After sales description of the fault code	Intersystem CAN network : Bus out of action
Description of the diagnostics	Faults in communication between ECUs on the CAN network
Conditions of activation of the diagnostics	Ignition on
Conditions of disappearance of the fault	Ignition on (For 2 s)
Down-grade modes if fault present	During normal operation, automatic stopping is prohibited
	If a malfunction is detected during automatic stopping, then automatic starting is prohibited
Switching on of the warning lamp and/or warning message	-
Main customer complaints likely	No automatic stopping
	Problem with lighting of the AS&G warning lamp on the instrument panel
Suspect areas	Stop and Start ECU
	Intersystem CAN network

Fault code(s): U0001

Reminder DTC

Do not fill in this section for the FLOW CHART phase

DTC no.	Aftersales text of the DTC	Fault type	Conditions for fault finding	Downgraded mode after a fault is ascertained	Consequences of the fault on driving	Suspected areas Major control steps	The client effect(s)/symptom(s) associated with the DTCs	Fault code(s) to be dealt with before working through this flow chart	Tools required
U0001	CAN inter-system network: Bus not operational		Stop and Start						

PRE-CHECK

FLOW CHART Test procedure

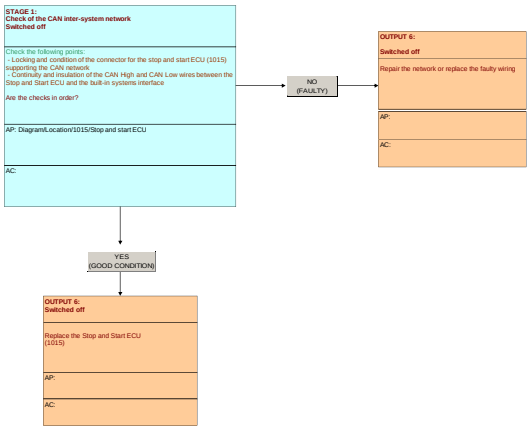

INFORMATION : FAULT CODE U0100 (STOP AND START ECU)

Stop and Start ECU	
Fault code	U0100
After sales description of the fault code	Intersystem CAN network : Timing of the engine ECU
Description of the diagnostics	Faults in communication between ECUs on the CAN network
Conditions of activation of the diagnostics	The following conditions have to be met - Battery voltage between 10 and 16 V - Ignition on (For 2 s) - 2 s after the battery voltage is above 10 V
Conditions of disappearance of the fault	With the engine running
Down-grade modes if fault present	During normal operation, automatic stopping is prohibited
	If a malfunction is detected during automatic stopping, then automatic starting is prohibited
Switching on of the warning lamp and/or warning message	-
Main customer complaints likely	No automatic stopping
	Problem with lighting of the AS&G warning lamp on the instrument panel
Suspect areas	Stop and Start ECU
	Engine ECU
	Electrical harnesses
	Connector
	Intersystem CAN network

Fault code(s): U0100

Reminder DTC

Do not fill in this section for the FLOW CHART phase

DTC no.	Alternates text of the DTC	Fault type	Conditions for fault finding	Downgraded mode after a fault is ascertained	Lamp or warning light to be activated	Suspected zones Major control steps	The client effect(Symptom(s)) associated with the DTC's	Fault code(s) to be dealt with before working through this flow chart	Tools required
U0100	CAN/vster-system-network: Timeout of the ECU-engine	Stop and start							

PRE-CHECK

FLOW CHART Test procedure

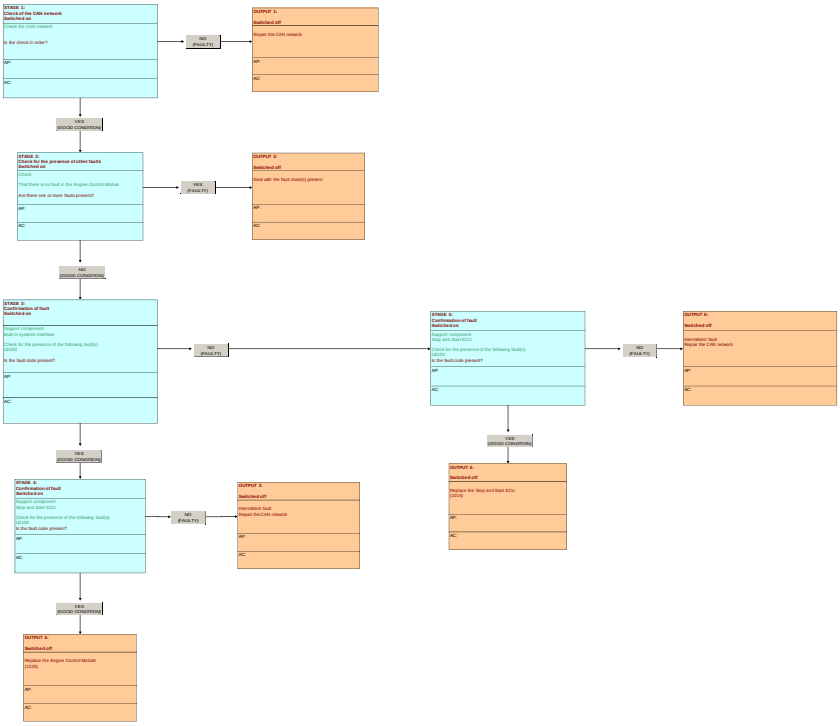

INFORMATION : FAULT CODE U0141 (STOP AND START ECU)

Stop and Start ECU	
Fault code	U0141
After sales description of the fault code	Intersystem CAN network : Timing of the BSI
Description of the diagnostics	Faults in communication between ECUs on the CAN network
Conditions of activation of the diagnostics	The following conditions have to be met - Battery voltage between 10 and 16 V - Ignition on (For 2 s) - 2 s after the battery voltage is above 10 V
Conditions of disappearance of the fault	With the engine running
Down-grade modes if fault present	During normal operation, automatic stopping is prohibited
	If a malfunction is detected during automatic stopping, then automatic starting is prohibited
Switching on of the warning lamp and/or warning message	-
Main customer complaints likely	No automatic stopping
	Problem with lighting of the AS&G warning lamp on the instrument panel
Suspect areas	Built-in systems interface
	Electrical harnesses
	Connectors
	Stop and Start ECU

Fault code(s): U0141

Reminder DTC

Do not fill in this section for the FLOW CHART phase

DTC no.	Aftersales text of the DTC	Fault type	Conditions for fault finding	Downgraded mode after a fault is ascertained	Malfunction indicator lamp	Suspected areas Major control steps	The client effect(s)/symptom(s) associated with the DTCs	Fault code(s) to be dealt with before working through this flow chart	Tools required
U0141	CAN inter-system network: Timeout of the ECU-ETACS	Stop and Start							

PRE-CHECK

FLOW CHART Test procedure

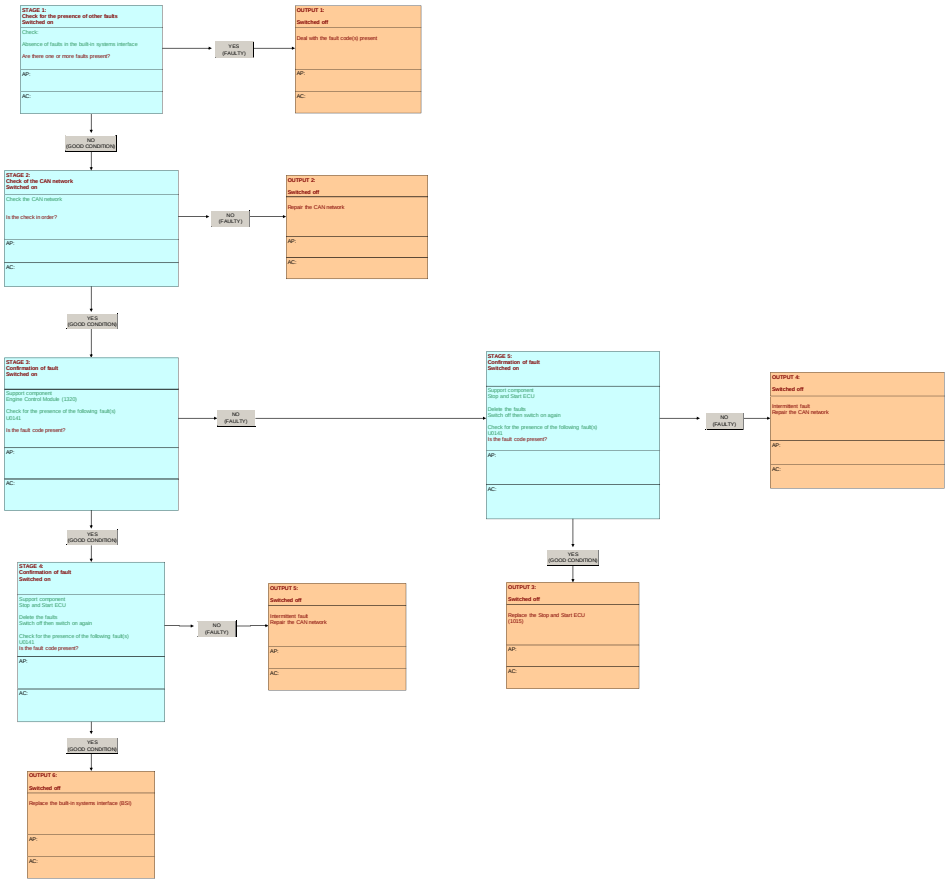

INFORMATION : FAULT CODE U1180 (STOP AND START ECU)

Stop and Start ECU	
Fault code	U1180
After sales description of the fault code	Intersystem CAN network : Timing of the instrument panel
Description of the diagnostics	Faults in communication between ECUs on the CAN network
Conditions of activation of the diagnostics	At least one of the following conditions must be fulfilled - Ignition on - With the engine running - Battery voltage between 10 and 16 V - 2 s after the battery voltage is above 10 V
Conditions of disappearance of the fault	With the engine running
Down-grade modes if fault present	During normal operation, automatic stopping is prohibited
	If a malfunction is detected during automatic stopping, then automatic starting is prohibited
Switching on of the warning lamp and/or warning message	-
Main customer complaints likely	No automatic stopping
	Problem with lighting of the AS&G warning lamp on the instrument panel
Suspect areas	Instrument panel
	Electrical harnesses
	Connectors
	Stop and Start ECU

Fault code(s): U1180

Reminder DTC

Do not fill in this section for the FLOW CHART phase

DTC no.	Aftersales text of the DTC	Fault type	Conditions for fault finding	Downgraded mode after a fault is ascertained	Illumination of warning light	Suspected areas Major control steps	The client effect(s)/symptom(s) associated with the DTCs	Fault code(s) to be dealt with before working through this flow chart	Tools required
U1180	CAN inter-system network: Timeout of the instrument panel	Stop and Start							

PRE-CHECK

FLOW CHART Test procedure

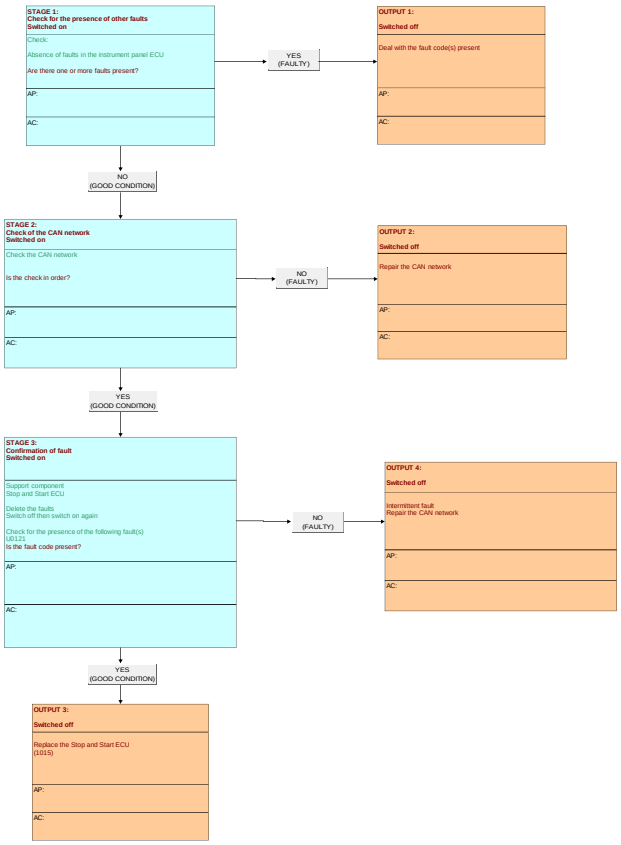

INFORMATION : FAULT CODE U1201 (STOP AND START ECU)

Stop and Start ECU	
Fault code	U1201
After sales description of the fault code	Intersystem CAN network : Error in the vehicle speed signal
Description of the diagnostics	Faults in communication between ECUs on the CAN network
Conditions of activation of the diagnostics	At least one of the following conditions must be fulfilled - Ignition on - With the engine running - Absence of the fault code U0121
Conditions of disappearance of the fault	With the engine running
Down-grade modes if fault present	During normal operation, automatic stopping is prohibited
	If malfunctioning is detected during the automatic stop, perform a forced automatic start
Switching on of the warning lamp and/or warning message	-
Main customer complaints likely	No automatic stopping
Suspect areas	ABS/ESP ECU
	Electrical harnesses
	Connectors
	Stop and Start ECU

Fault code(s): U1201

Reminder DTC

Do not fill in this section for the FLOW CHART phase

DTC no.	Aftersales text of the DTC	Fault type	Conditions for fault finding	Downgraded mode after a fault is ascertained	Illumination of warning light	Suspected areas Major control steps	The client effect(s)/symptom(s) associated with the DTCs	Fault code(s) to be dealt with before working through this flow chart	Tools required
U1201	CAN inter-system network: Error in vehicle speed signal	Stop and Start							

PRE-CHECK

FLOW CHART Test procedure

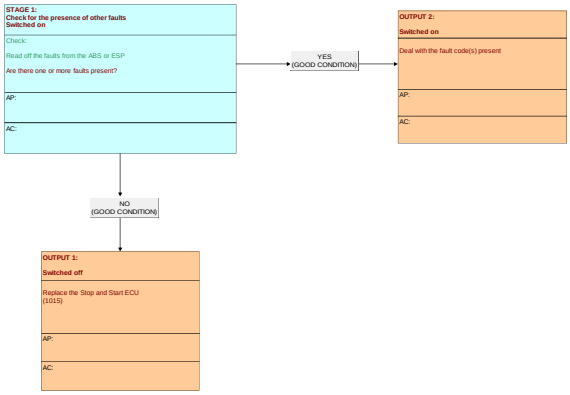

INFORMATION : FAULT CODE P0421 (ENGINE MANAGEMENT ECU)

Engine ECU CONTINENTAL SID 807 branch 2	
Fault code	P0421
After sales description of the fault code	Catalytic converter : Detected absent
Description of the diagnostics	Detection of absence of the catalytic convertor on starting the engine
	The time to upload a fault code is less than one second
Conditions of activation of the diagnostics	With the engine running
Conditions of disappearance of the fault	Driving for 5 minutes
Down-grade modes if fault present	-
Switching on of the warning lamp and/or warning message	Engine diagnosis warning lamp
Main customer complaints likely	Starting problem
	Lack of power
Suspect areas	Catalytic converter

INFORMATION : FAULT CODE P1459 (ENGINE MANAGEMENT ECU)

Engine ECU CONTINENTAL SID 807 branch 2	
Fault code	P1459
After sales description of the fault code	EGR valve : Blocked pipe detected
Description of the diagnostics	Difference between input pressure and atmospheric pressure more than 1200 mbars
	The fault code recording time is less than 2 seconds
Conditions of activation of the diagnostics	With the engine running
Conditions of disappearance of the fault	Driving for 5 minutes while remaining below 2500 rpm and half load
Down-grade modes if fault present	-
Switching on of the warning lamp and/or warning message	Engine diagnosis warning lamp
Main customer complaints likely	Noise
	Lack of power
Suspect areas	EGR intercooler
	EGR circuit
	EGR bypass