SERVICE BULLETIN

MITSUBISHI MOTORS

GLOBAL AFTER SALES OFFICE, MITSUBISHI MOTORS CORPORATION

PURPOSE : CHANGE	ISSUE NO. : MSB-15E11-003	DATE : 2015-10-15
SUBJECT : Additions of the maintenance procedure of 9HD diesel engine		<DESTINATION/MODEL> (As per attached sheet) <M/Y> 15.5
GROUP : Gr:11(Engine)		ASX(GA0W)

1. Description :

Please refer to the attached document for the information about the change of mention in the applicable service manual. Also, please refer to the following service bulletins for the troubleshooting and the electric wiring diagram for 9HD diesel engine.

- Troubleshooting : MSB-15E11-002
- Electric wiring diagram : MSB-15E11-001

2. Affected service manuals :

Applicable manual	Pub. No.	Applicable title (INFO ID)	Content
2015.5 ASX WORKSHOP MANUAL	CGAE15E2-CD(ENG) CGAF15E2-CD(FRE) CGAG15E2-CD(GER) CGAS15E2-CD(SPA) CGAI15E2-CD(ITA)	-	Attached sheet

3. About the details :

Please refer to the attached document (Attached sheet)

4. Effective time : From 15.5MY of the related vehicles

Repair Method

＞Check

- Setting the valve timing
- Setting the valve timing low pressure fuel supply circuit (SIEMENS injection)
- Vacuum circuit
- High pressure fuel circuit
- Turbocharger pressure
- Oil pressure
- Pressure, engine end of compression
- Ancillary drive belt
- Wear adjustment system on clutch mechanism

＞Tightening torques

- DV4C, DV6C, DV6DTED, DV6ETED, DV6UC, DV6 UE6 engines
- Engine assembly mountings – Gearbox
- Clutch

＞ Dismantling

- Under engine
- Engine top
- Coolant outlet housing
- Camshaft position sensor
- High pressure fuel sensor
- Timing belt
- Starter
- Turbocharger pressure regulation electrovalve
- Coolant temperature sensor
- Ancillary drive belt
- Engine and gearbox assembly
- Hydraulic clutch stop
- Alternator

＞Removing

- Camshaft
- Engine ring seals
- Turbo air cooler by-pass unit
- Inlet air metering unit
- Pre-heater plugs
- Pressure sensor / Inlet air temperature
- Fuel temperature sensor
- Oil pressure sensor
- Engine speed sensor
- Exhaust manifold
- Coolant inlet manifold
- Cylinder head on the vehicle
- EGR module
- Fuel filter
- Oil filter
- Diesel injector
- Coolant pump
- Oil pump
- High pressure fuel pump(Continental – SIEMENS)
- Camshaft housing
- High pressure fuel injection common rail
- High pressure fuel regulator on high pressure fuel pump
- Air inlet pipe
- Turbocharger
- Electrically-Controlled exhaust gas recycling valve
- Cylinder head cover
- Clutch mechanism
- Drive shaft seals
- Discharge (by-pass) circuit control electrovalve of the exhaust gas recirculation heat exchanger

＞Modification

- Turbocharger lubrication pipe banjo bolt

＞Identification

- Under engine
- Engine top

＞Location

- Engine harness

＞Cleaning

- Unions on the fuel high pressure common injection rail (HDI)

＞Prohibited operations

- Direct injection system (HDI)

＞Fitting

- Engine on stand

＞Refitting

- Under engine
- Engine top

＞Overhaul

- DV4C/M, DV6C/D/E/U, DV6CM/DM/EM/UM engines

＞Checking and adjusting values

- DV6C – DV6CM – DV6C UE6 engines
- F6MBC W6MBC manual gearbox

＞Special service tools

- Special service tools for ASX 9HD

TIGHTENING TORQUES : ENGINE ASSEMBLY MOUNTINGS - GEARBOX

WARNING : Adhere to the tightening torques

1 - RH ENGINE SUPPORT

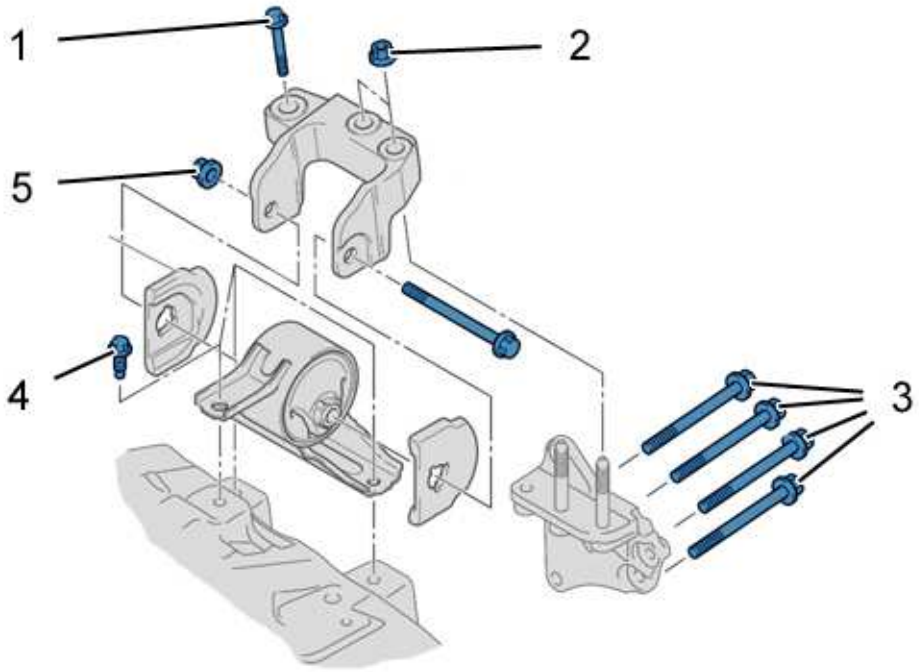

b1bb1l4d

Reference	Designation	Tightening torque
(1)	bolts (Right-hand intermediate engine mounting)	8,2 daNm
(2)	Nut (Right-hand intermediate engine mounting)	8,2 daNm
(3)	bolts (Right-hand intermediate engine mounting / Engine block)	5,5 daNm
(4)	bolts (Bracket / Chassis leg)	5 daNm
(5)	bolts/Nut (Hanging bracket)	10 daNm

2 - GEARBOX SUPPORT ON GEARBOX

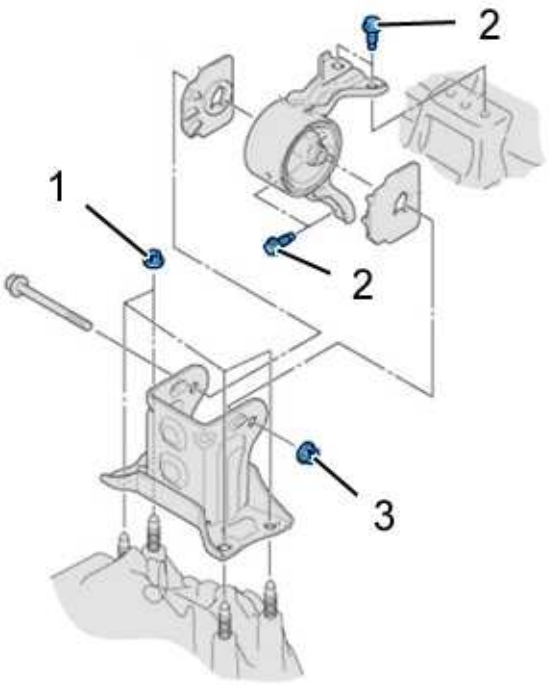

b1bb1fsd

Reference	Designation	Tightening torque
(1)	Nuts (Bracket / Gearbox)	4,7 daNm
(2)	bolts (Bracket / Chassis leg)	5 daNm
(3)	bolts/Nut (Hanging bracket)	9,5 daNm

3 - REACTION ROD

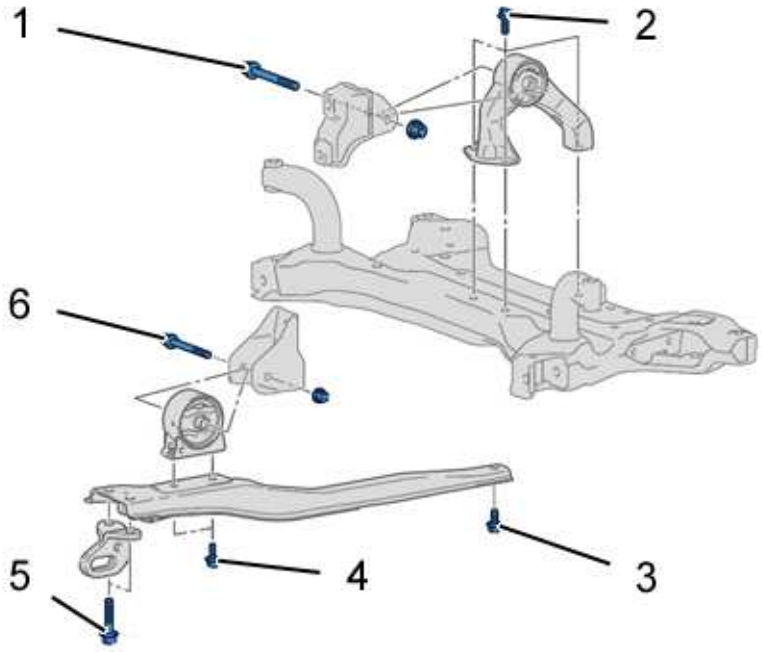

b1bb1l5d

Referenc	Designation	Tightening torque
(1)	bolts/Nut (Rear reaction link rod)	5,3 daNm
(2)	bolts (Rear reaction link rod / Front subframe)	5 daNm
(3)	bolts (Crossmember / Front subframe)	7,1 daNm
(4)	bolts (Plate / Crossmember)	5 daNm
(5)	bolts (Crossmember / Body	7,1 daNm
(6)	bolts/Nut (Front reaction link rod)	5,6 daNm

TIGHTENING TORQUES : DV4C, DV6C, DV6DTED, DV6ETED, DV6UC, DV6 UE6 ENGINES

1 - CYLINDER HEAD

1 - 1 - Tightening torques

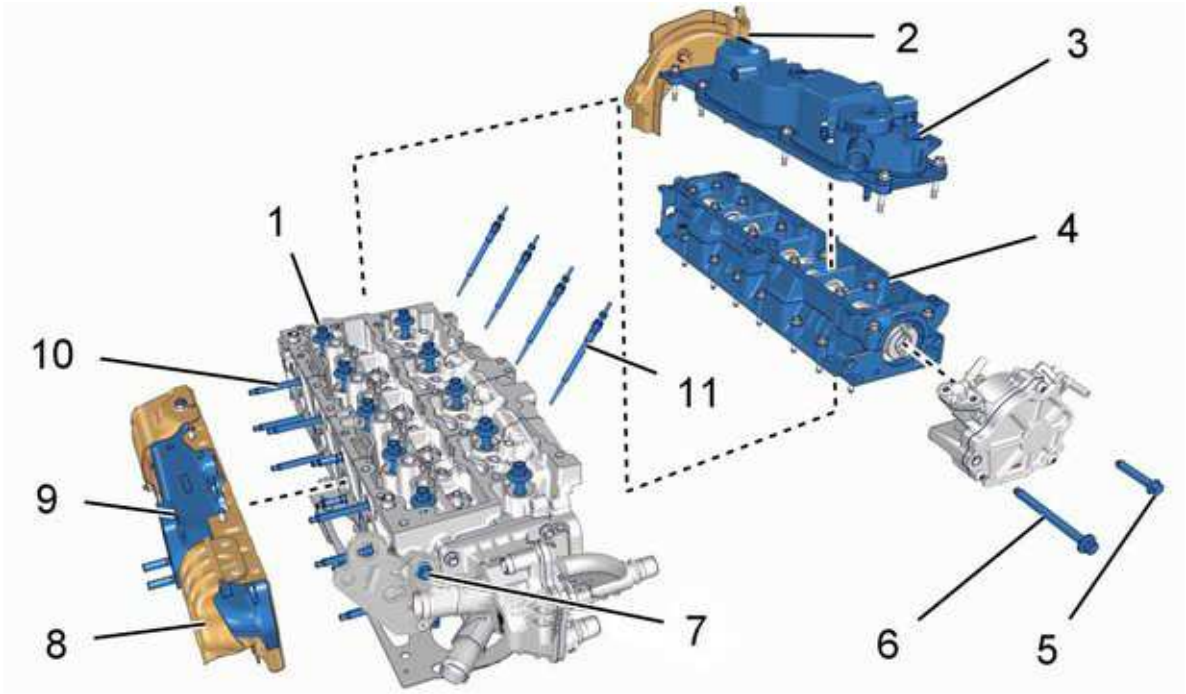

b1bb0pmd

Reference	Designation	Tightening torque
(1)	bolts (Cylinder head) (*) (**)	Pre-tighten to 2 daNm
		Tightening to 4 m.daN
		Angular tightening to 260°
(2)	bolts (Rear upper timing cover) (*)	1 daNm
(3)	bolts (Oil trap) (*)	Pre-tighten to 0,5 daNm
		Tightening to 1,3 m.daN
(4)	bolts (Camshaft bearings covers) (*)	Pre-tighten to 0,3 daNm
		Tightening to 1 m.daN
(5)	bolts (vacuum pump)	Pre-tighten to 0,5 daNm
		Tightening to 1,8 m.daN
(6)	bolts (vacuum pump)	Pre-tighten to 0,5 daNm
		Tightening to 2 m.daN
(7)	bolts (lifting bracket)	2 daNm
(8)	nuts (Exhaust manifold heat shield)	0,8 daNm
(9)	nuts (Exhaust manifold) (*) (**)	2,5 daNm
(10)	studs (Exhaust manifold)	1 daNm
(11)	Pre-heater plugs	0,6 daNm
(*) Follow the tightening sequence		
(**) Always to be replaced whenever removed		

1 - 2 - Sequence of tightening the bolts (1)

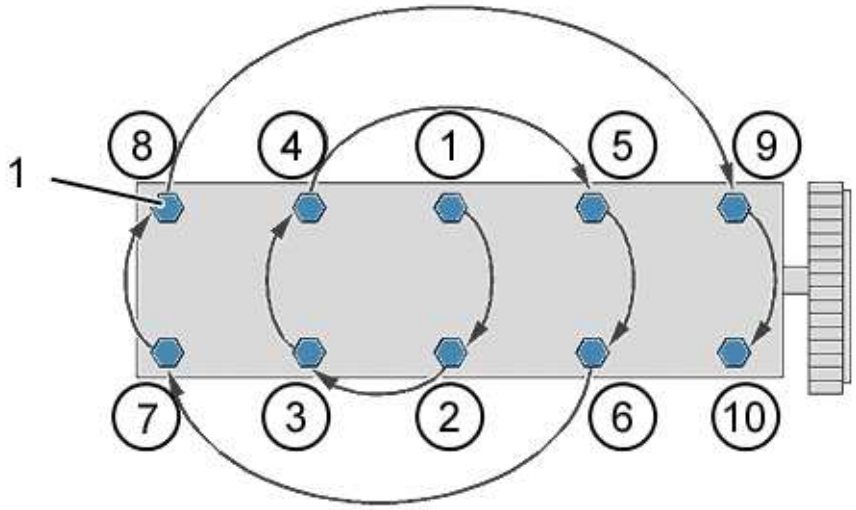

b1bb1mhd

WARNING : Follow the tightening sequence

1 - 3 - Sequence of tightening of screws (2) and (3)

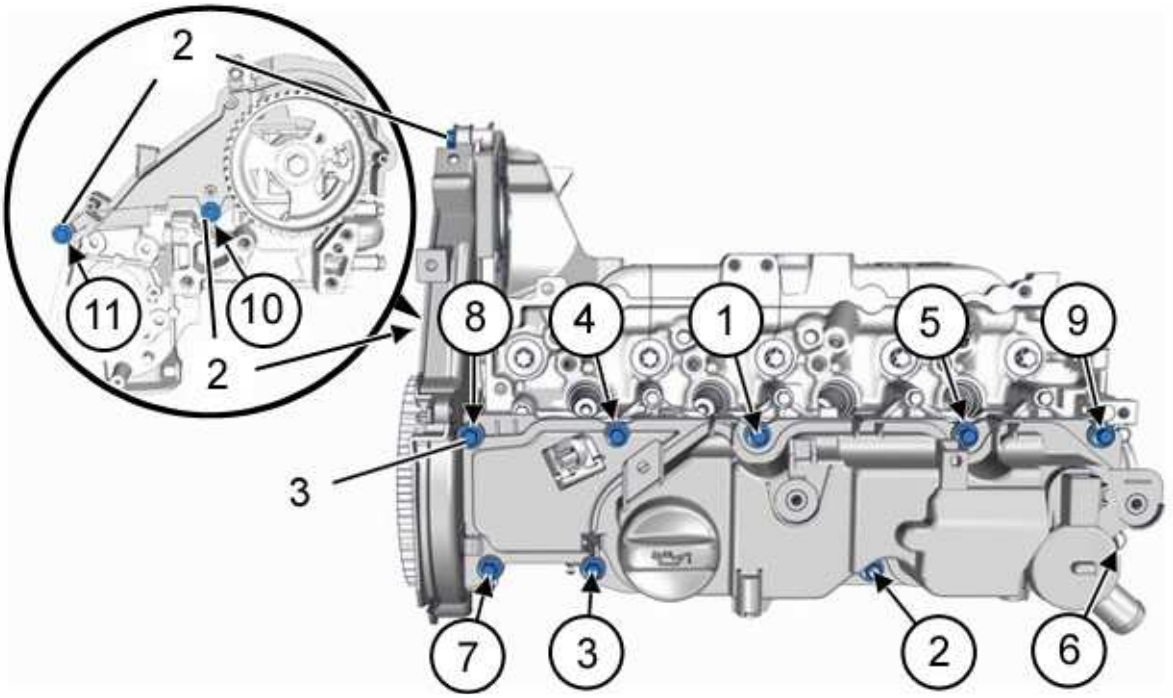

b1bb0mid

(2) bolts (Rear upper timing cover).

(3) bolts (Oil trap).

WARNING : Follow the tightening sequence

1 - 4 - Sequence of tightening the bolts (4)

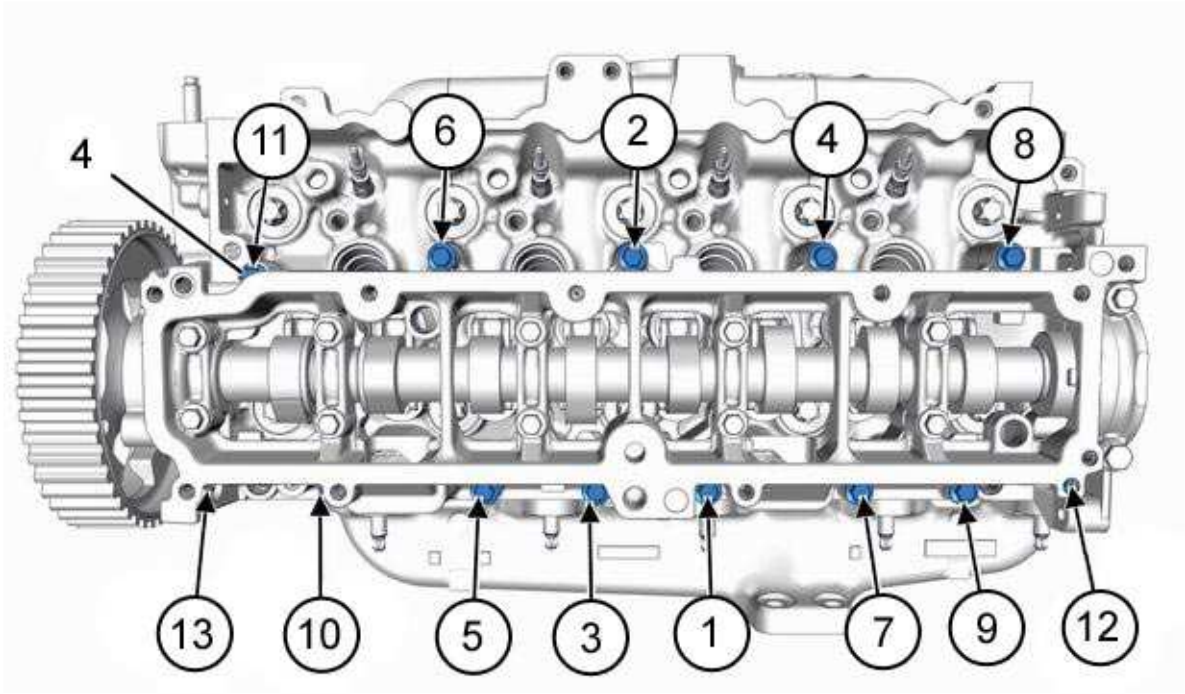

b1bb1mid

WARNING : Follow the tightening sequence

1 - 5 - Sequence of tightening of nuts (9)

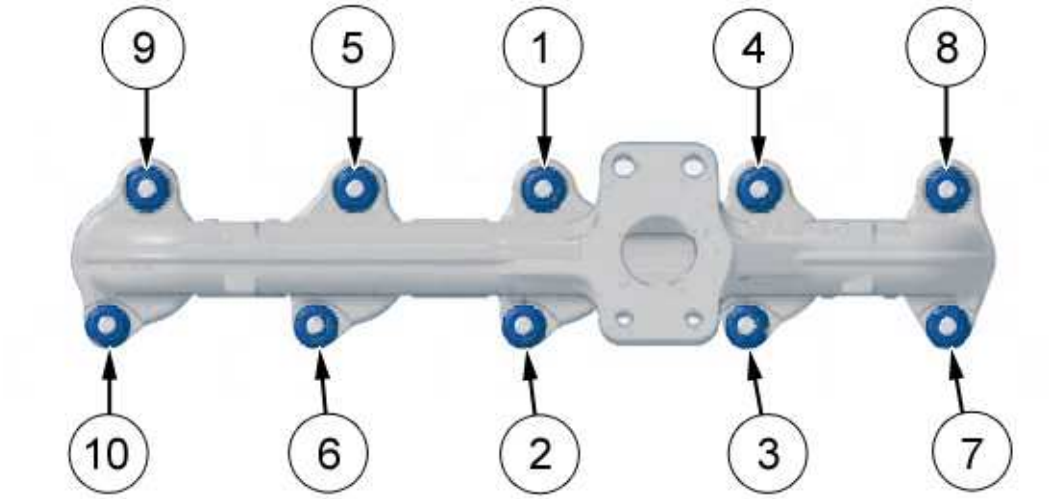

b1jp0a5d

WARNING : Follow the tightening sequence

2 - CYLINDER BLOCK

2 - 1 - Tightening torques

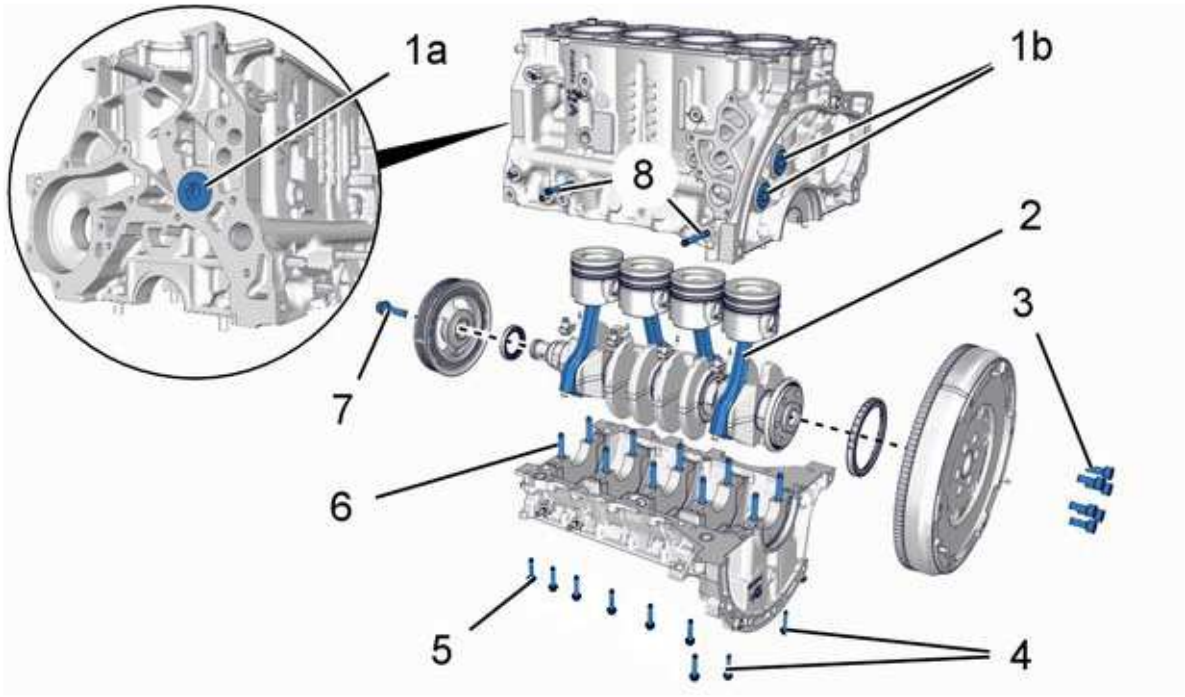

b1bb0mjd

Reference	Designation	Tightening torque
(1)	Caps (Cylinder block)	3,2 daNm
(2)	bolts (Conrods)	Pre-tighten to 0,5 daNm
		Tightening to 1 m.daN
		Angular tightening to 130°
(3)	bolts (Double damped flywheel) (according to equipment) (*) (**)	Pre-tighten to 2,5 daNm
		Pre-tighten to 0,8 daNm
		Tightening to 3 m.daN
		Angular tightening to 90°
	bolts (Engine flywheel) (according to equipment) (*) (**)	Pre-tighten to 2,5 daNm
		Pre-tighten to 0,8 daNm
		Pre-tighten to 1,7 daNm
		Angular tightening to 75°
(4)	bolts (Crankshaft main bearing cap casing) (*)	Pre-tighten to 0,6 daNm
		Tightening to 0,8 m.daN
(5)	bolts (Crankshaft main bearing cap casing) (*)	Pre-tighten to 0,6 daNm
		Tightening to 0,8 m.daN
(6)	bolts (Bearing caps) (*)	Pre-tighten to 1 daNm
		Angular slackening of 180°
		Tightening to 3 m.daN
		Angular tightening to 140°
(7)	bolts (Accessories drive pulley) (**)	Pre-tighten to 3,5 daNm
		Angular tightening to 190°
(8)	studs (Catalytic converter/particle filter assembly) (according to equipment)	0,6 daNm
(*) Follow the tightening sequence		
(**) Always to be replaced whenever removed		

2 - 2 - Sequence of tightening the bolts (3)

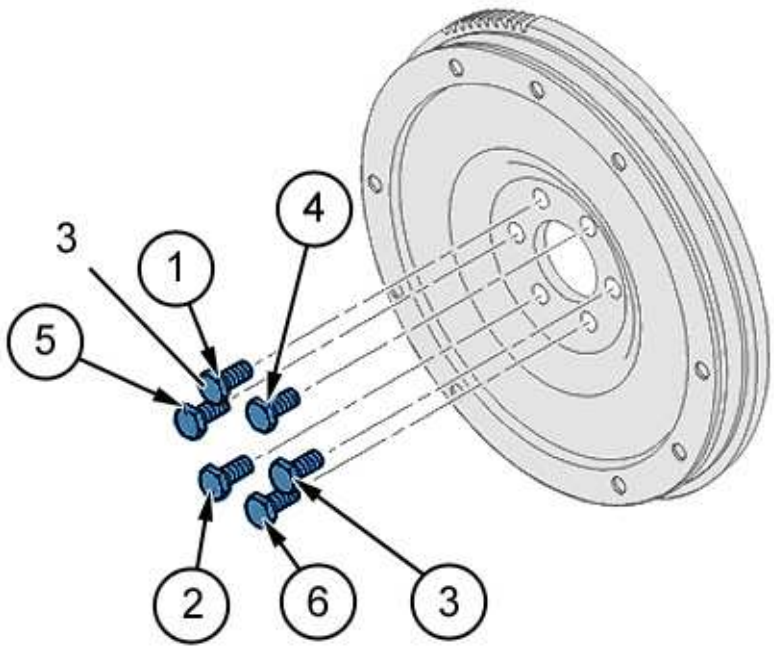

b1bb1mld

WARNING : Follow the tightening sequence

2 - 3 - Sequence of tightening of screws (4), (5) and (6)

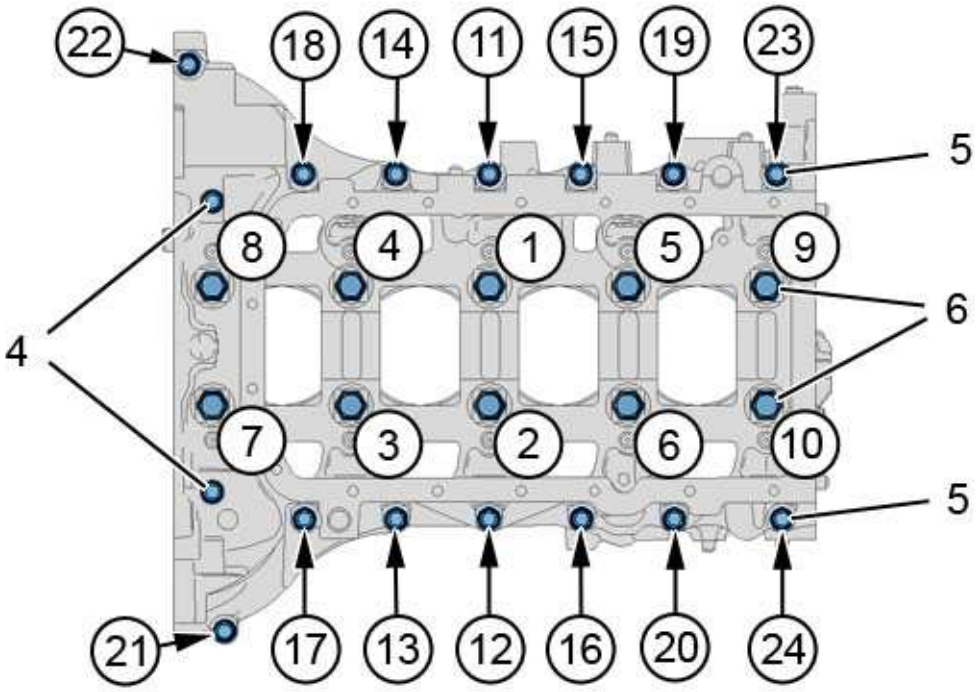

b1db01bd

(4) bolts (Crankshaft main bearing cap casing) (bolts M6).

(5) bolts (Crankshaft main bearing cap casing) (bolts M6).

(6) bolts (Bearing caps) (bolts M9).

WARNING : Follow the tightening sequence

Tightening procedure :

- Pre-tightening of the 10 bolts (6) to 1 m.daN (from 1 to 10)
- Pre-tightening of the 14 bolts (5) to 0,6 m.daN (from 11 to 24)
- Tightening of the 2 bolts (4) to 0,8 m.daN (inside the flywheel bell housing)
- Slackening of the bolts (6) by 180°
- Tightening of the 10 bolts (6) to 3 m.daN (from 1 to 10)
- Angular tighten the screws (6) to 140 ° (from 1 to 10)
- Tightening of the 14 bolts (5) to 0,8 m.daN (from 11 to 24)

3 - LUBRICATION

3 - 1 - Tightening torques

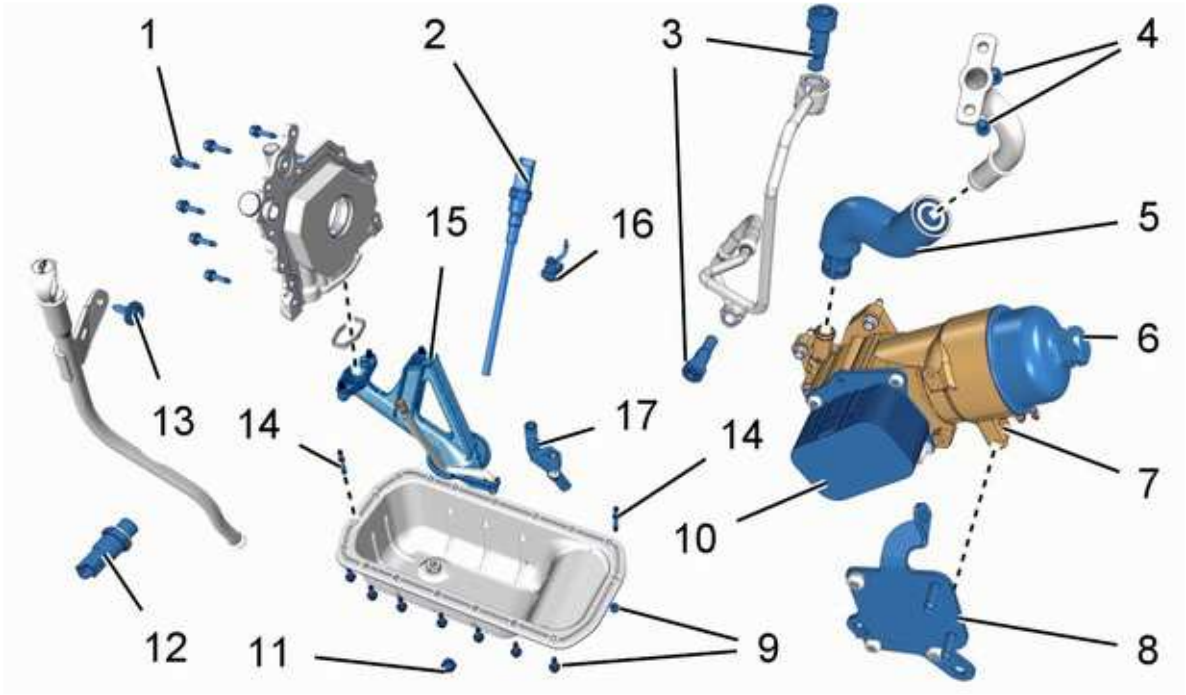

b1fb00zd

Reference	Designation	Tightening torque
(1)	bolts (Oil pump assembly) (*)	Pre-tighten to 0,5 daNm
		Tightening to 0,9 m.daN
(2)	Oil level sensor	3 daNm
(3)	Banjo bolt (Turbocharger lubricating pipe)	3 daNm
(4)	bolts (Turbocharger lubrication return pipe)	0,8 daNm
(5)	collars (Turbocharger lubrication return pipe)	0,3 daNm
(6)	Oil filter cover	2,5 daNm
(7)	bolts (Oil filter support)	1 daNm
(8)	bolts (Turbocharger electrovalve support)	1 daNm
(9)	bolts (sump)	1,2 daNm
(10)	bolts (coolant/oil heat exchanger)	1 daNm
(11)	drain plug	3,4 daNm
(12)	Oil pressure switch	3,2 daNm
(13)	bolts (Dipstick guide tube)	0,8 daNm
(14)	studs (sump)	0,8 daNm
(15)	bolts (Oil suction strainer)	1 daNm
(16)	bolts (Piston skirt spray jets)	2 daNm
(17)	bolts (Oil filler return tube)	1 daNm
(*) Follow the tightening sequence		

3 - 2 - sump - Except DV6UC engine

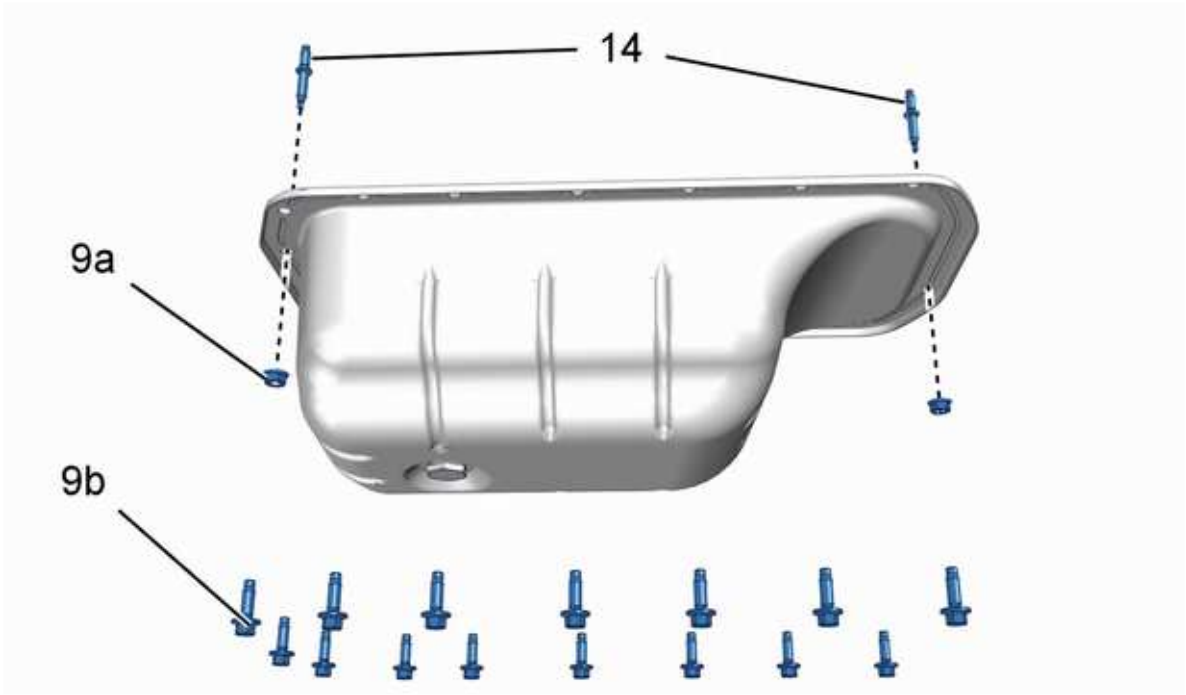

b1fa00wd

(9a) nut(sump).

(9b) bolts (sump).

(14) studs (sump).

3 - 3 - sump - DV6UC engine

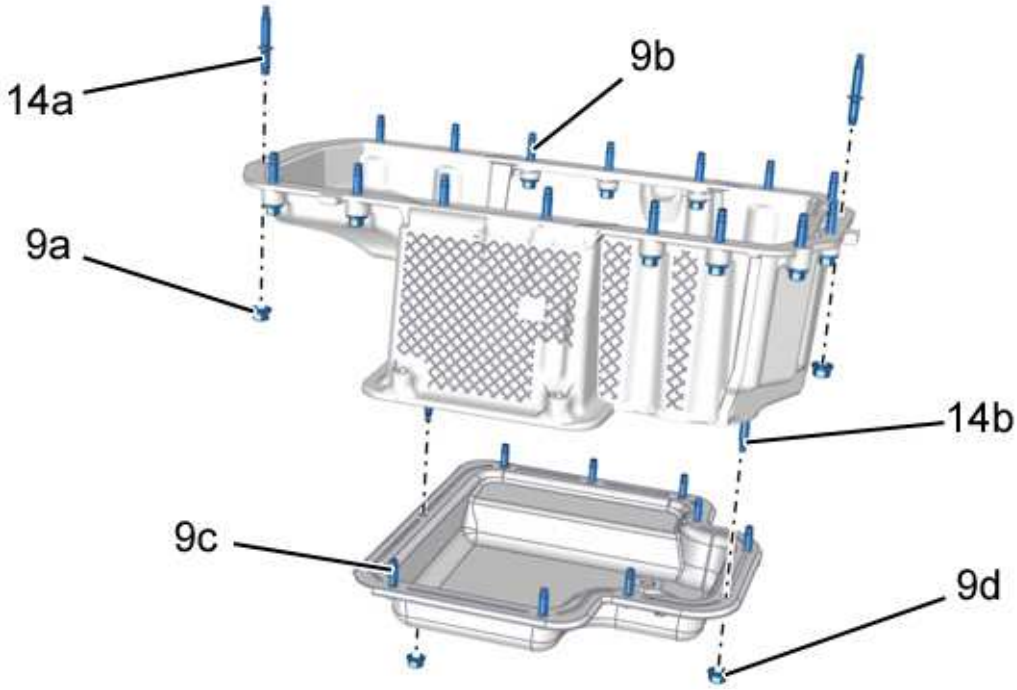

b1bb1dcd

Lower oil sump :

- (9a) nuts (2 nuts)
- (9b) bolts ((15) bolts)
- (14a) studs (2 studs)

Upper oil sump :

- (9c) bolts (7 bolts)
- (9d) nuts (2 nuts)
- (14b) studs (2 studs)

3 - 4 - Sequence of tightening the bolts (1) (previous fitting)

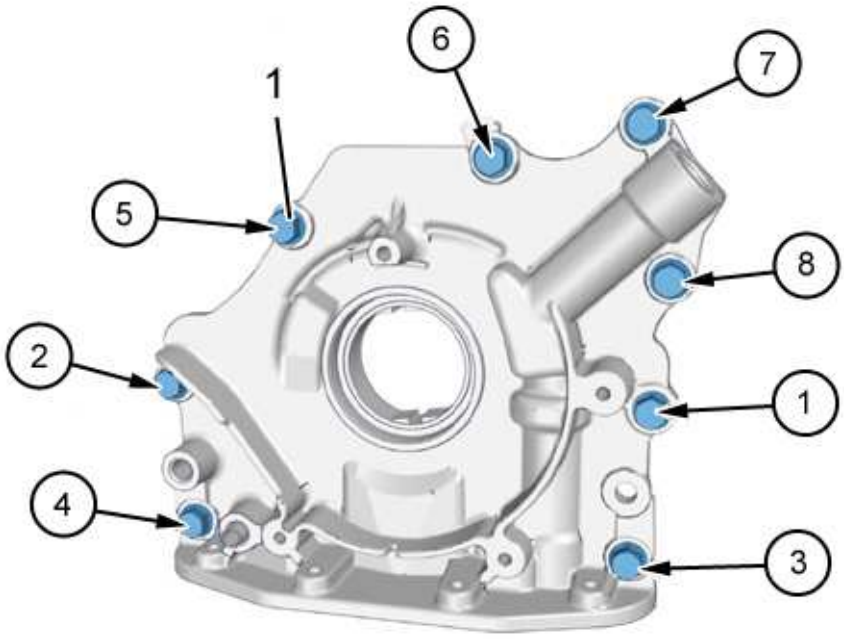

b1fb010d

WARNING : Follow the tightening sequence

3 - 5 - Sequence of tightening the bolts (1) (new fitting)

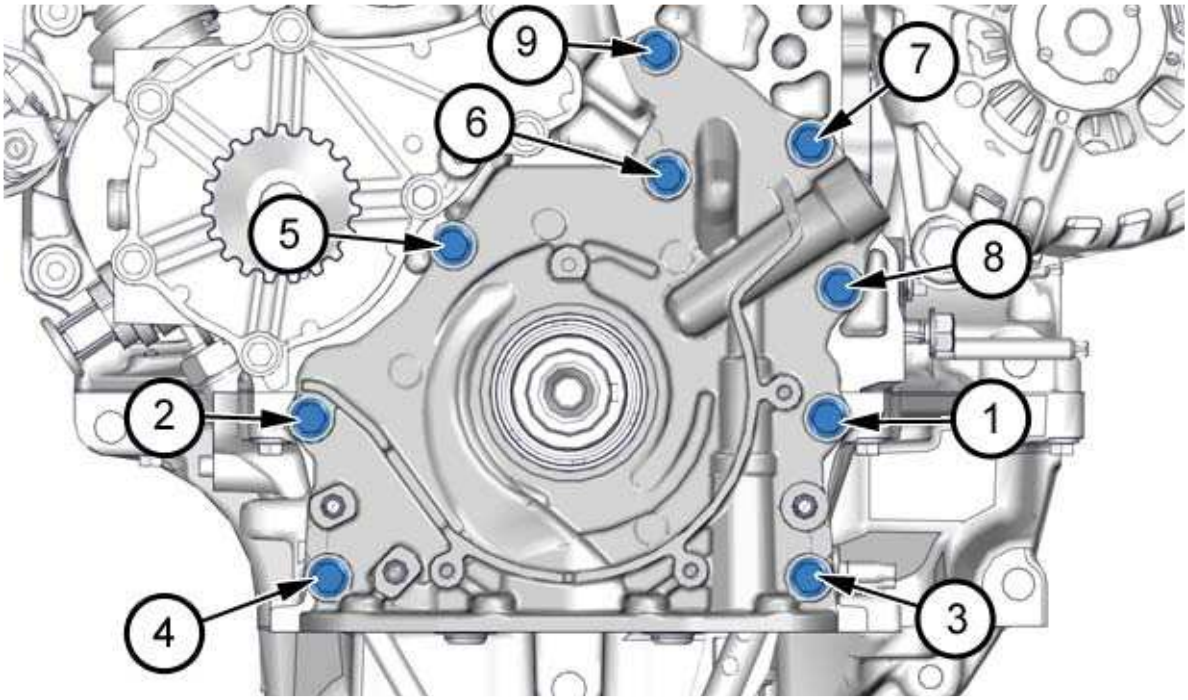

b1bb1y7d

WARNING : Follow the tightening sequence

4 - TIMING GEAR

4 - 1 - Tightening torques

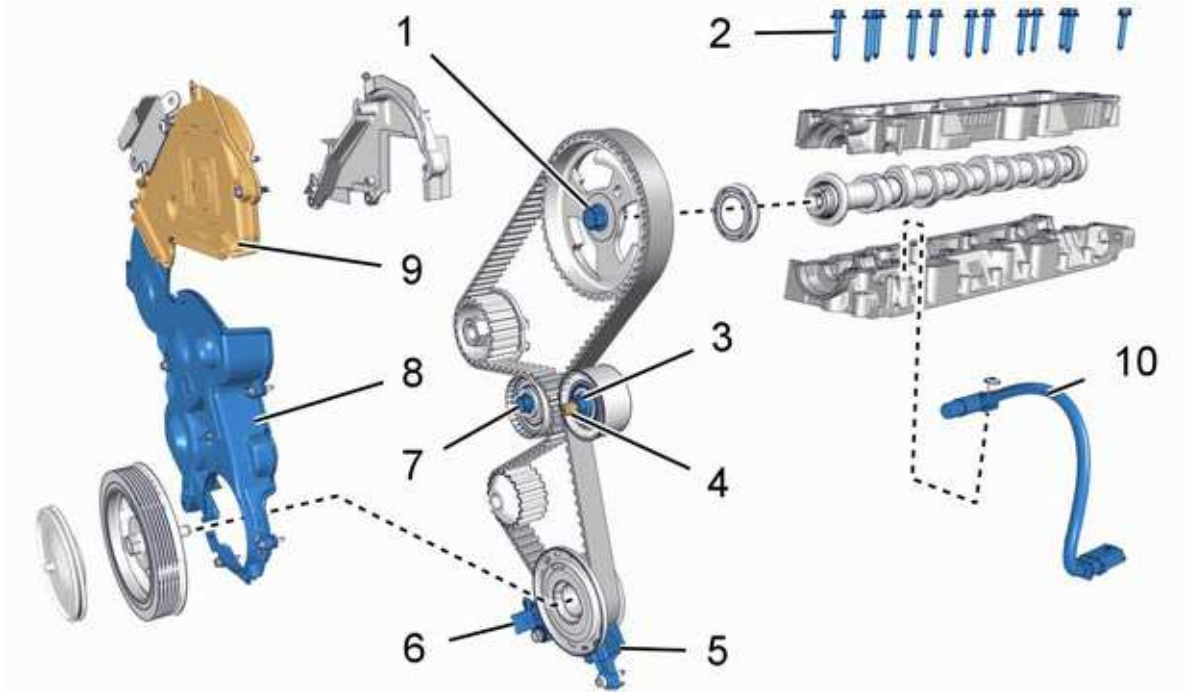

b1eb00ed

Reference	Fixings	Tightening torque
(1)	bolts (Camshaft pulley)	Pre-tighten to 2 daNm
		Angular tightening to 50°
(2)	bolts (Camshaft bearing caps) (*)	Pre-tighten to 0,3 daNm
		Tightening to 1 m.daN
(3)	nut(Timing belt roller bearing)	3,7 daNm
(4)	Stud (Timing belt roller bearing)	0,6 daNm
(5)	bolts (Shift prevention bracket)	0,6 daNm
(6)	bolts (Engine speed sensor)	0,8 daNm
(7)	bolts (Timing belt tensioner roller)	3 daNm
(8)	bolts (Lower timing cover)	0,5 daNm
(9)	bolts (Upper timing cover)	0,4 daNm
(10)	bolts (Camshaft position sensor)	0,8 daNm
(*) Follow the tightening sequence		

4 - 2 - Sequence of tightening the bolts (2)

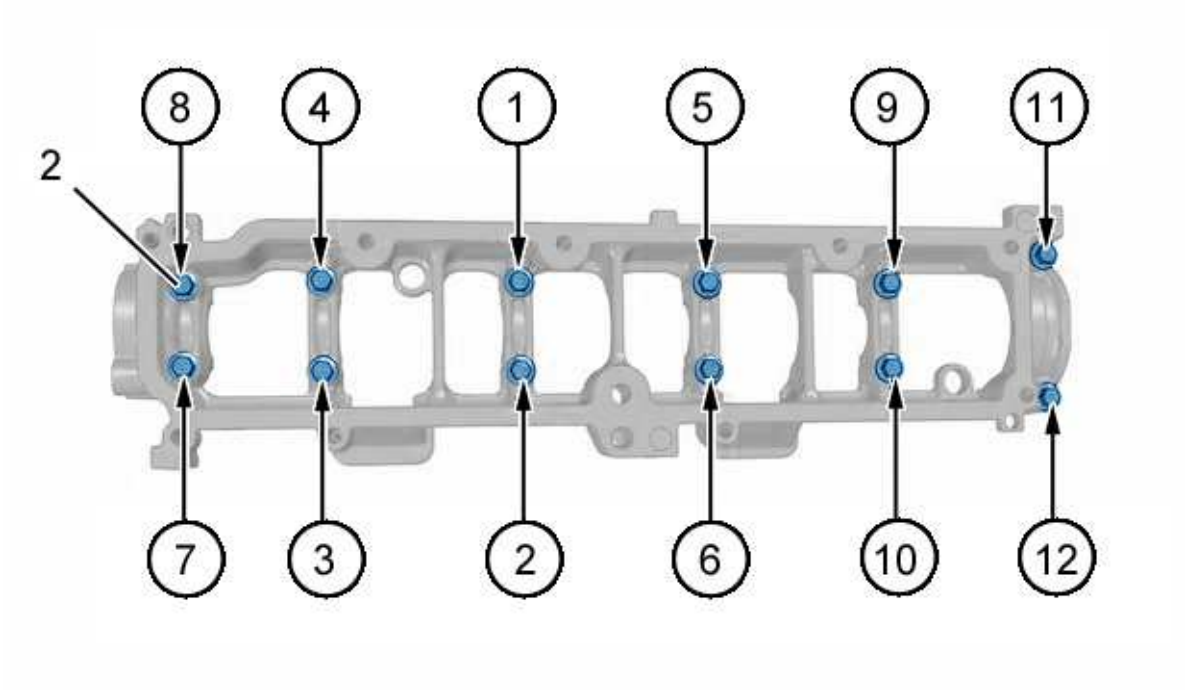

b1bb1mmd

WARNING : Follow the tightening sequence

5 - TURBOCHARGING CIRCUIT

5 - 1 - Engines DV4 euro 5(STOP AND START version) Or DV6 engines all types

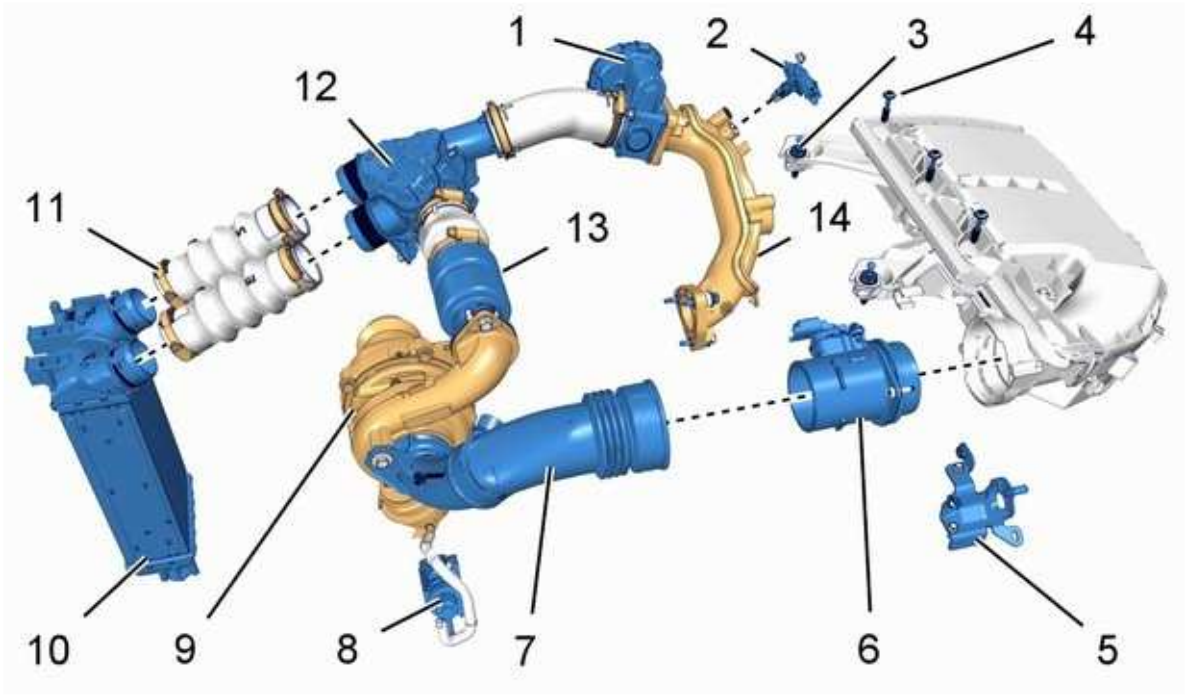

b1bb0thd

Referenc	Designation	Tightening torque
(1)	bolts (Inlet air metering unit)	0,8 daNm
(2)	bolts (Inlet air pressure and temperature sensor)	0,8 daNm
(3)	bolts (Air filter chamber)	0,8 daNm
(4)	bolts (Air filter cover)	0,5 daNm
(5)	bolts (Air filter unit mounting)	0,8 daNm
(6)	bolts (Air flow meter)	0,3 daNm
(7)	bolts (Turbocharger inlet duct)	0,7 daNm
(8)	nut(Variable geometry turbocharger control solenoid valve)	0,8 daNm
(9)	nut(turbocharger) (**)	2,6 daNm
(10)	bolts (Turbocharger air cooler)	0,8 daNm
(11)	Clip (Air union)	(***)
(12)	bolts (Turbo air cooler by-pass unit)	0,8 daNm
(13)	bolts (Turbocharger noise attenuator)	0,7 daNm
(14)	bolts (Air inlet manifold)	0,8 daNm
(**) Always to be replaced whenever removed		
(***) According to equipment		

5 - 2 - Engine DV4 EURO 5 (Without stop and start)

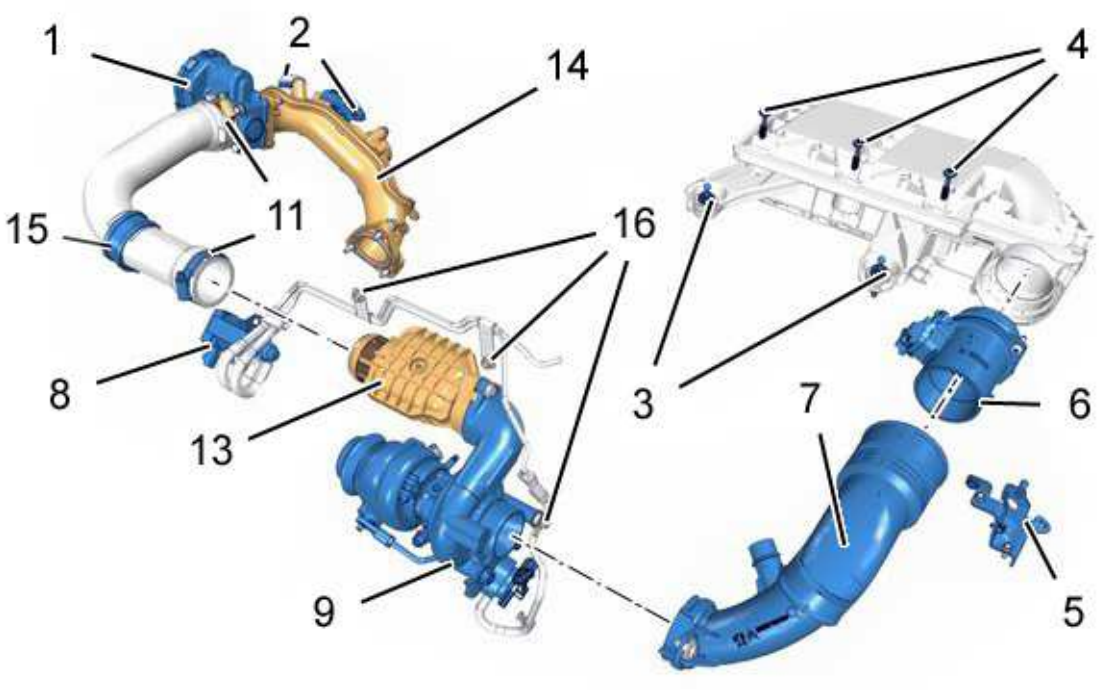

b1bb0tid

Reference	Designation	Tightening torque
(1)	bolts (Inlet air metering unit)	0,8 daNm
(2a)	bolts (Inlet air pressure sensor)	0,8 daNm
(2b)	bolts (Inlet air temperature sensor)	0,8 daNm
(3)	bolts (Air filter chamber)	0,8 daNm
(4)	bolts (Air filter cover)	0,5 daNm
(5)	bolts (Air filter unit mounting)	0,8 daNm
(6)	bolts (Air flow meter)	0,3 daNm
(7)	bolts (Turbocharger inlet duct)	0,7 daNm
(8)	nut(Variable geometry turbocharger control solenoid valve)	0,8 daNm
(9)	nut(turbocharger) (**)	2,6 daNm
(11)	Clip (Air union)	(***)
(13)	bolts (Turbocharger noise attenuator)	0,7 daNm
(14)	bolts (Air inlet manifold)	0,8 daNm
(15)	collars (Hoses)	2,5 daNm
(16)	bolts (Vacuum circuit)	0,8 daNm
(**) Always to be replaced whenever removed		
(***) According to equipment		

5 - 3 - (***) Screw clip (11) (Air union)

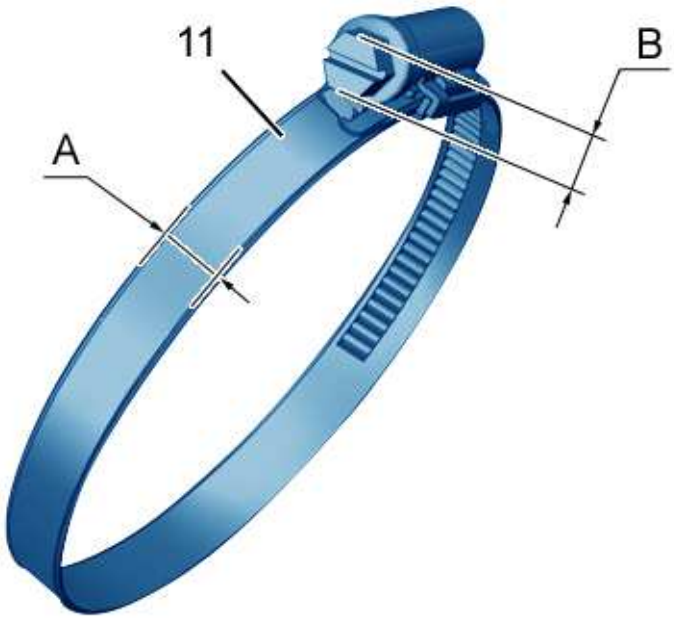

b1bb22fd

Referenc	Designation	Distance "A"	Distance "B"	Tightening torque
(11)	Clip (Air union)	9 mm	7 mm	0,35 daNm
		12 mm	8 mm	0,5 daNm

6 - EXHAUST GAS RECIRCULATION CIRCUIT

6 - 1 - All engines except DV6C UE6

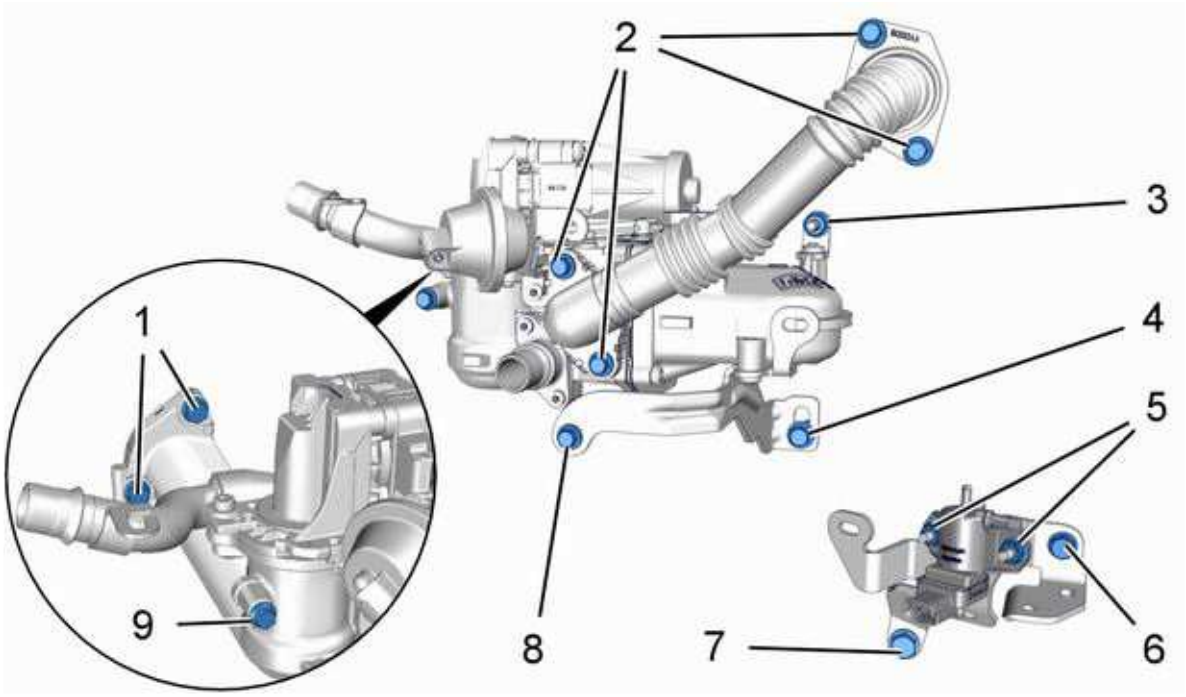

b1kb006d

Reference	Designation	Tightening torque
(1)	bolts (EGR exchanger module)	0,8 daNm
(2)	bolts (EGR pipe)	0,8 daNm
(3)	nut(EGR exchanger module)	0,8 daNm
(4)	bolts (EGR exchanger module)	2 daNm
(5)	nut(EGR (exhaust gas recycling) electrovalve)	0,8 daNm
(6)	bolts (EGR electrovalve support)	0,8 daNm
(7)	bolts (Coolant inlet manifold)	2 daNm
(8)	bolts (Coolant pipe)	0,8 daNm
(9)	bolts (Vacuum pipe support)	0,8 daNm

6 - 2 - DV6C UE6 engines

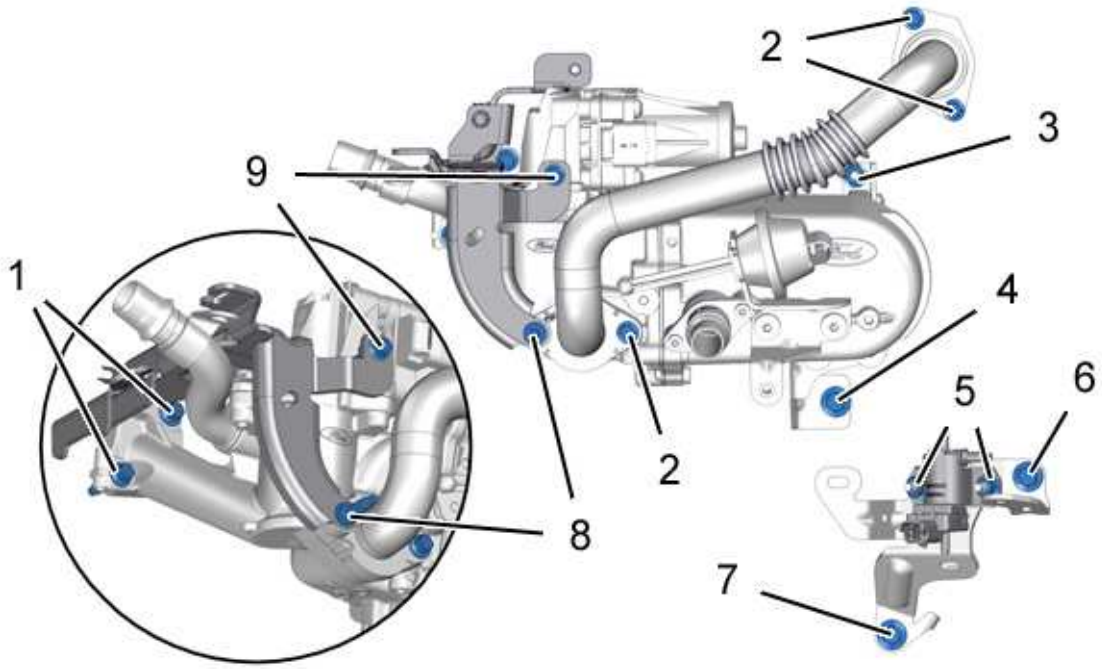

b1bb22gd

Reference	Designation	Tightening torque
(1)	bolts (EGR exchanger module)	0,8 daNm
(2)	bolts (EGR pipe)	0,8 daNm
(3)	nut(EGR exchanger module)	0,8 daNm
(4)	bolts (EGR exchanger module)	2 daNm
(5)	nut(EGR (exhaust gas recycling) electrovalve)	0,8 daNm
(6)	bolts (EGR electrovalve support)	0,8 daNm
(7)	bolts (Coolant inlet manifold)	2 daNm
(8)	Stud (Air filter support)	0,8 daNm
(9)	bolts (Vacuum pipe support)	0,8 daNm

6 - 3 - Exhaust gas recirculation electric valve

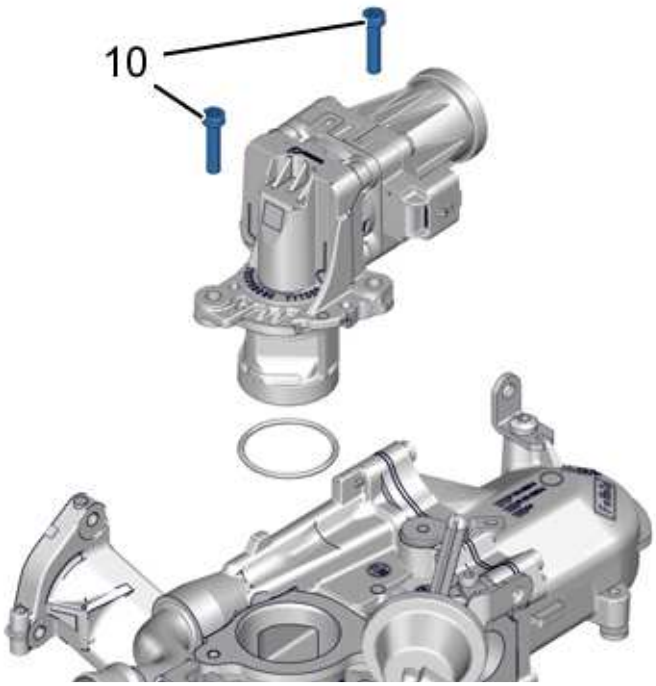

b1bb1xod

Reference	Designation	Tightening torque
(10)	bolts (Exhaust gas recirculation electric valve)	1 daNm

7 - ENGINE COOLING SYSTEM

7 - 1 - Tightening torques

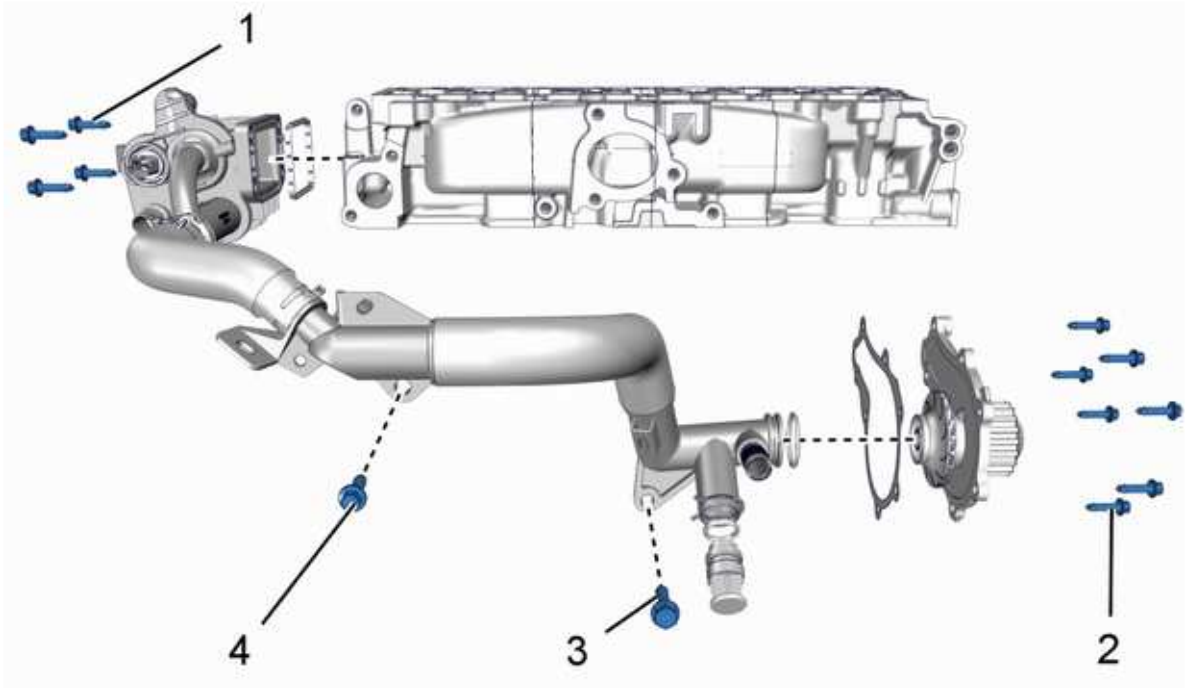

b1gb00dd

Reference	Designation	Tightening torque
(1)	bolts (Coolant outlet housing) (*)	Pre-tighten to 0,3 daNm
		Tightening to 0,8 m.daN
(2)	bolts (Coolant pump) (*)	Pre-tighten to 0,5 daNm
		Tightening to 0,9 m.daN
(3)	bolts (Coolant inlet manifold)	2 daNm
(4)	bolts (Coolant pipe)	0,8 daNm
(*) Follow the tightening sequence		

7 - 2 - Sequence of tightening the bolts (1)

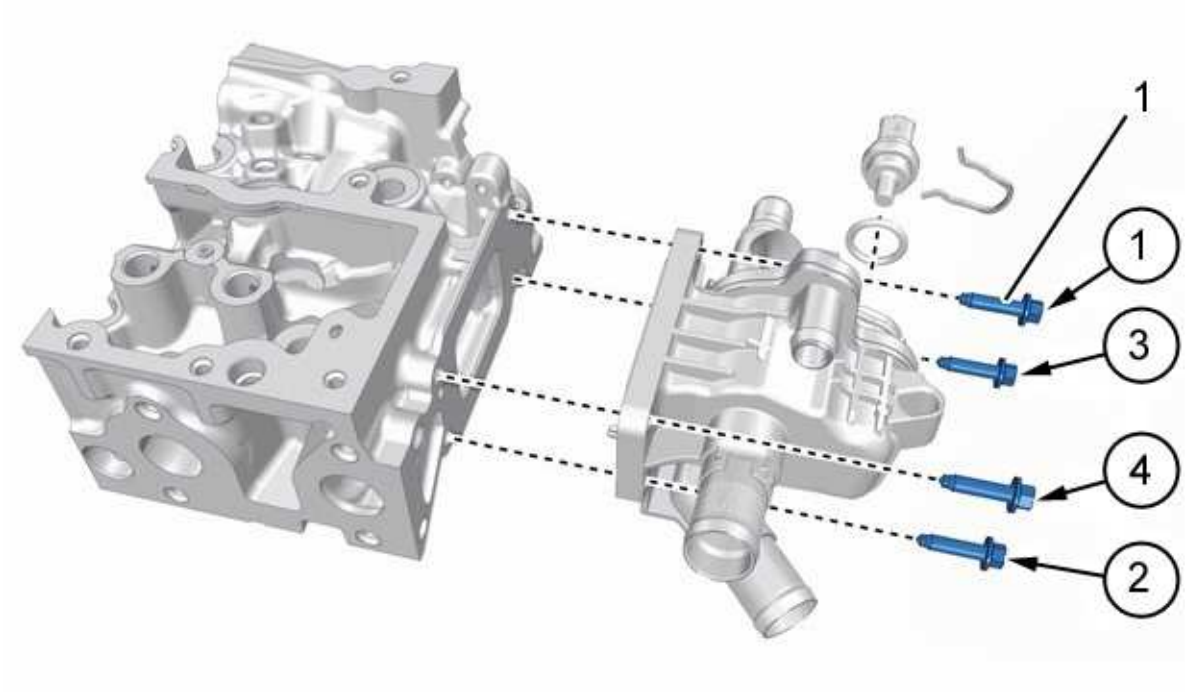

b1bb1mjd

WARNING : Follow the tightening sequence

7 - 3 - Sequence of tightening the bolts (2)

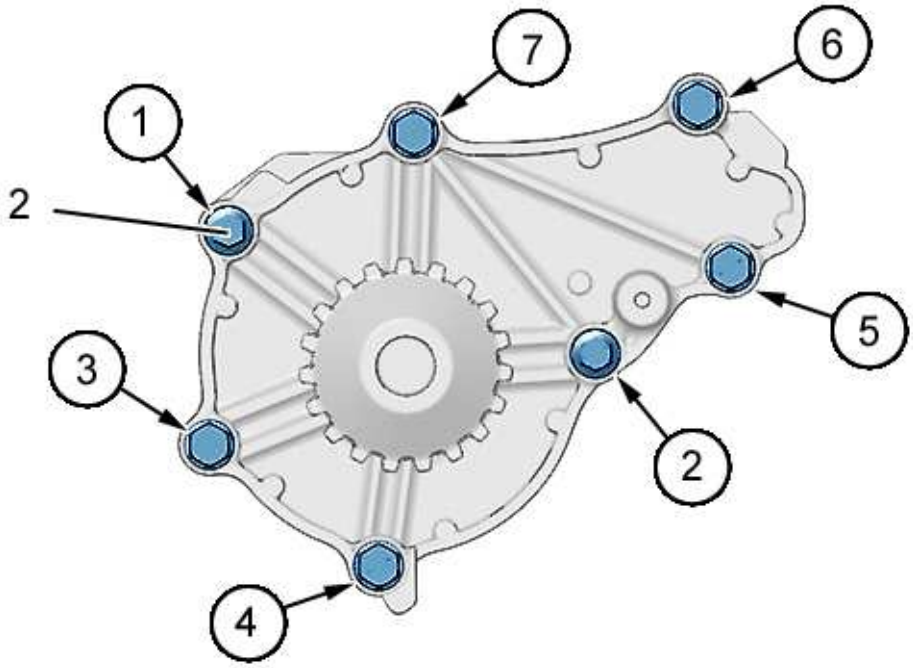

b1bb1mkd

WARNING : Follow the tightening sequence

8 - INJECTION SYSTEM

8 - 1 - injection CONTINENTAL(DV6C and DV6 UE6 engines)

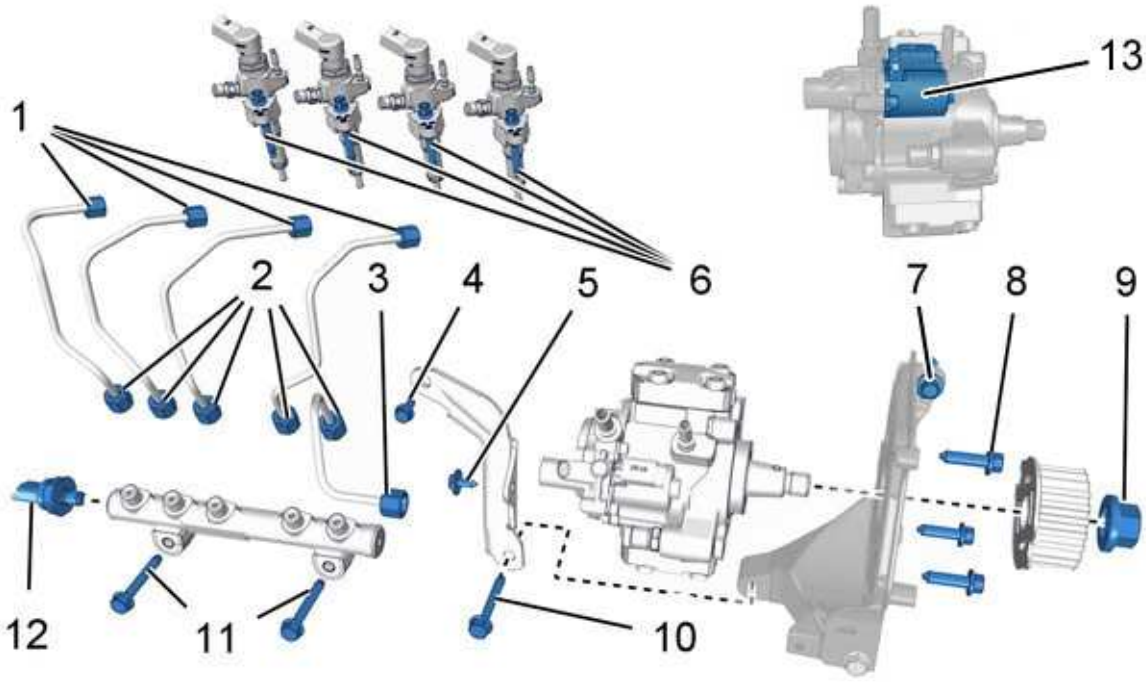

b1bb1mfd

Referenc	Designation	Tightening torque
(1)	Connections (Diesel injector) (**)	Pre-tighten to 2 daNm
		Tightening to 2,5 m.daN
(2)	Connections (Fuel high pressure pipes / Fuel high pressure common injection rail) (**)	Pre-tighten to 2 daNm
		Tightening to 2,5 m.daN
(3)	Union (High-pressure fuel pipe / Fuel high pressure pump) (**)	Pre-tighten to 2 daNm
		Tightening to 2,5 m.daN
(4)	bolts (Fuel high pressure pump rear bracket)	1 daNm
(5)	bolts (Fuel high pressure pump rear bracket)	1 daNm
(6)	bolts (Diesel injector fixing flange)	Pre-tighten to 0,7 daNm
		Angular tightening to 80°
(7)	bolts (Fuel high pressure pump front bracket)	2 daNm
(8)	bolts (Fuel injection pump / Bracket)	2 daNm
(9)	Fuel injection pump pulley nut	5 daNm
(10)	bolts (Fuel high pressure pump rear bracket)	2 daNm
(11)	bolts (Fuel high pressure common injection rail / Engine block)	2 daNm
(12)	Fuel high pressure sensor	4,5 daNm
(13)	bolts (Fuel pressure regulator / Fuel high pressure pump)	Pre-tighten to 0,3 daNm
		Tightening to 0,7 m.daN
(**) Always to be replaced whenever removed		

8 - 2 - BOSCH injection All engine types except DV6C and DV6 UE6

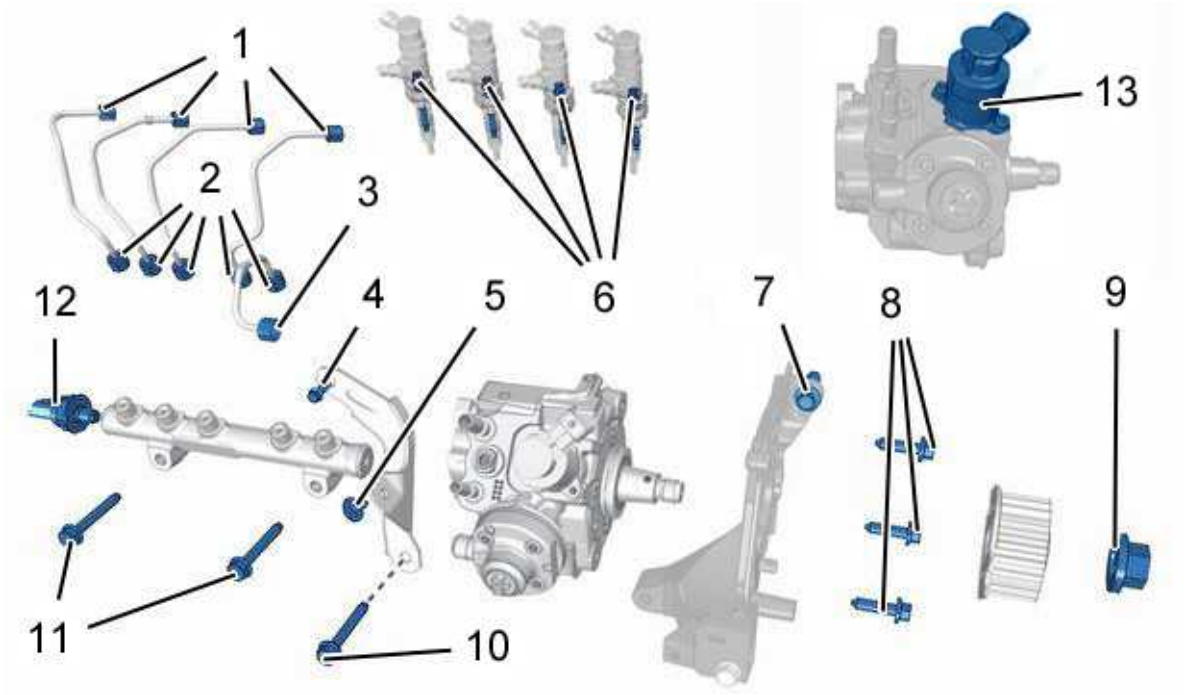

b1bb1mgd

Referenc	Designation	Tightening torque
(1)	Connections (Diesel injector) (**)	Pre-tighten to 2 daNm
		Tightening to 2,5 m.daN
(2)	Connections (Fuel high pressure pipes / Fuel high pressure common injection rail) (**)	Pre-tighten to 2 daNm
		Tightening to 2,5 m.daN
(3)	Union (High-pressure fuel pipe / Fuel high pressure pump) (**)	Pre-tighten to 2 daNm
		Tightening to 2,5 m.daN
(4)	bolts (Fuel high pressure pump rear bracket)	1 daNm
(5)	bolts (Fuel high pressure pump rear bracket)	1 daNm
(6)	bolts (Diesel injector fixing flange)	Pre-tighten to 0,7 daNm
		Angular tightening to 80°
(7)	bolts (Fuel high pressure pump front bracket)	2 daNm
(8)	bolts (Fuel injection pump / Bracket)	2 daNm
(9)	Fuel injection pump pulley nut	5 daNm
(10)	bolts (Fuel high pressure pump rear bracket)	2 daNm
(11)	bolts (Fuel high pressure common injection rail / Engine block)	2 daNm
(12)	Fuel high pressure sensor	4,5 daNm
(13)	bolts (Fuel pressure regulator / Fuel high pressure pump)	Pre-tighten to 0,3 daNm
		Tightening to 0,7 m.daN
(**) Always to be replaced whenever removed		

8 - 3 - Fuel filter

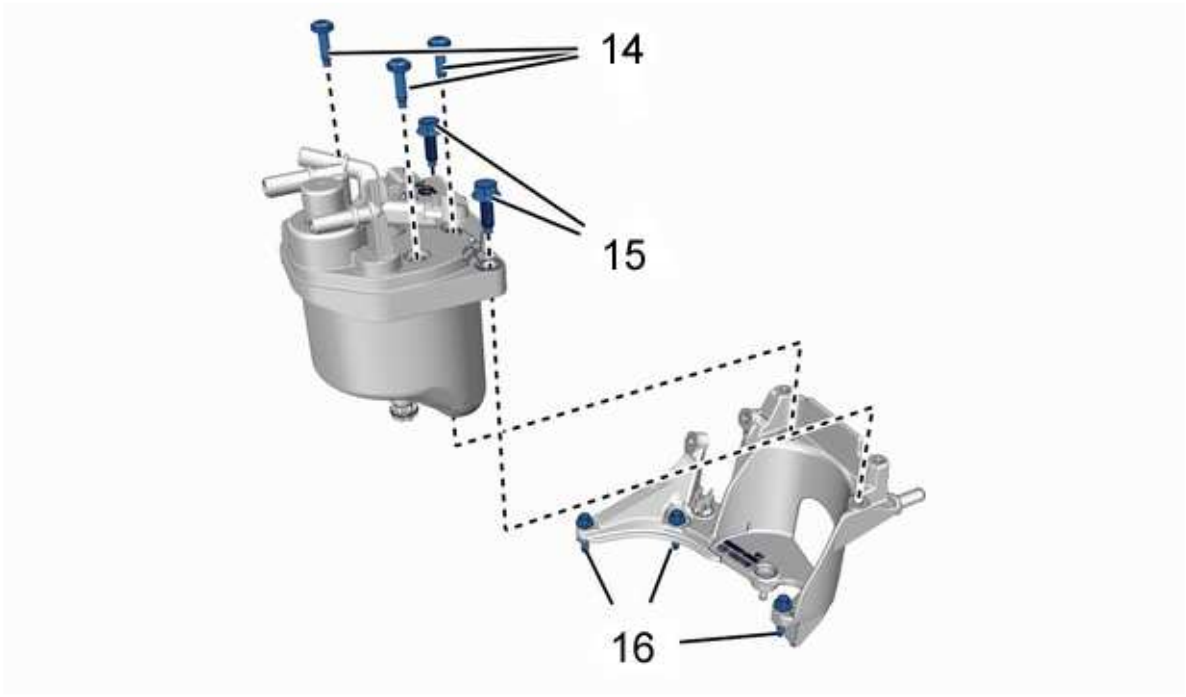

b1bb22hd

Reference	Designation	Tightening torque
(14)	bolts (Fuel filter cover)	0,3 daNm
(15)	bolts (Fuel filter)	0,8 daNm
(16)	bolts (Fuel filter support)	0,8 daNm

9 - ENGINE EQUIPMENT - WITHOUT STOP AND START

9 - 1 - Alternator - Without stop and start

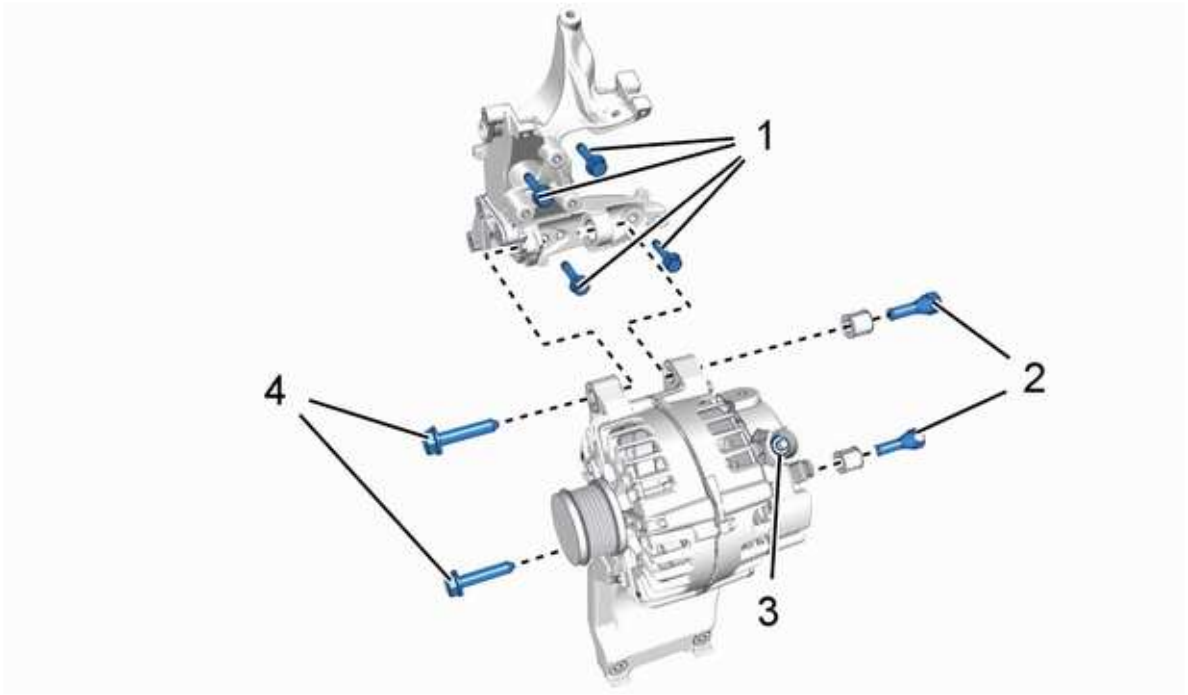

d1cb004d

Reference	Designation	Tightening torque
(1)	bolts (Multifunction support)	2 daNm
(2)	bolts (Alternator)	4,9 daNm
(3)	nut(Alternator power circuit)	1,6 daNm
(4)	bolts (Alternator)	4,3 daNm

9 - 2 - Version with air conditioning

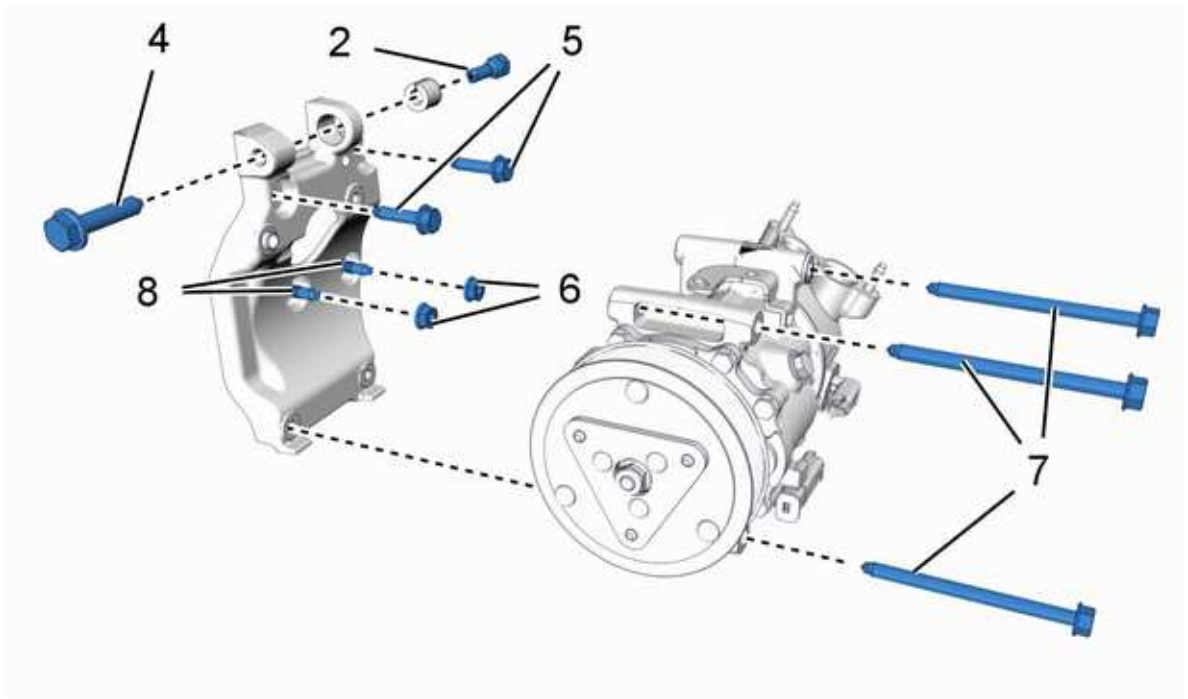

c5hb00od

Reference	Designation	Tightening torque
(2)	bolts (Alternator)	4,9 daNm
(4)	bolts (Alternator)	4,3 daNm
(5)	bolts (Air conditioning compressor support)	2 daNm
(6)	bolts (Air conditioning compressor support)	2 daNm
(7)	bolts (air conditioning compressor)	2,4 daNm
(8)	studs (Air conditioning compressor support)	0,6 daNm

9 - 3 - Version without air conditioning

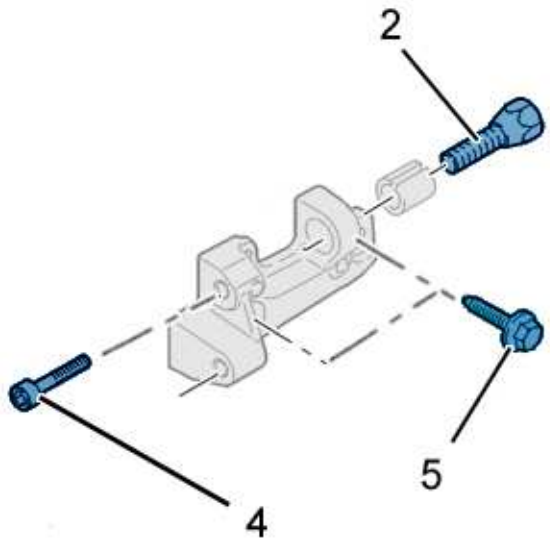

b1bb0tkd

Reference	Designation	Tightening torque
(2)	bolts (Alternator)	4,9 daNm
(4)	bolts (Alternator)	4,3 daNm
(5)	bolts (Support for auxiliary equipment)	2 daNm

9 - 4 - Dynamic roller tensioner - Electric power steering - Without stop and start

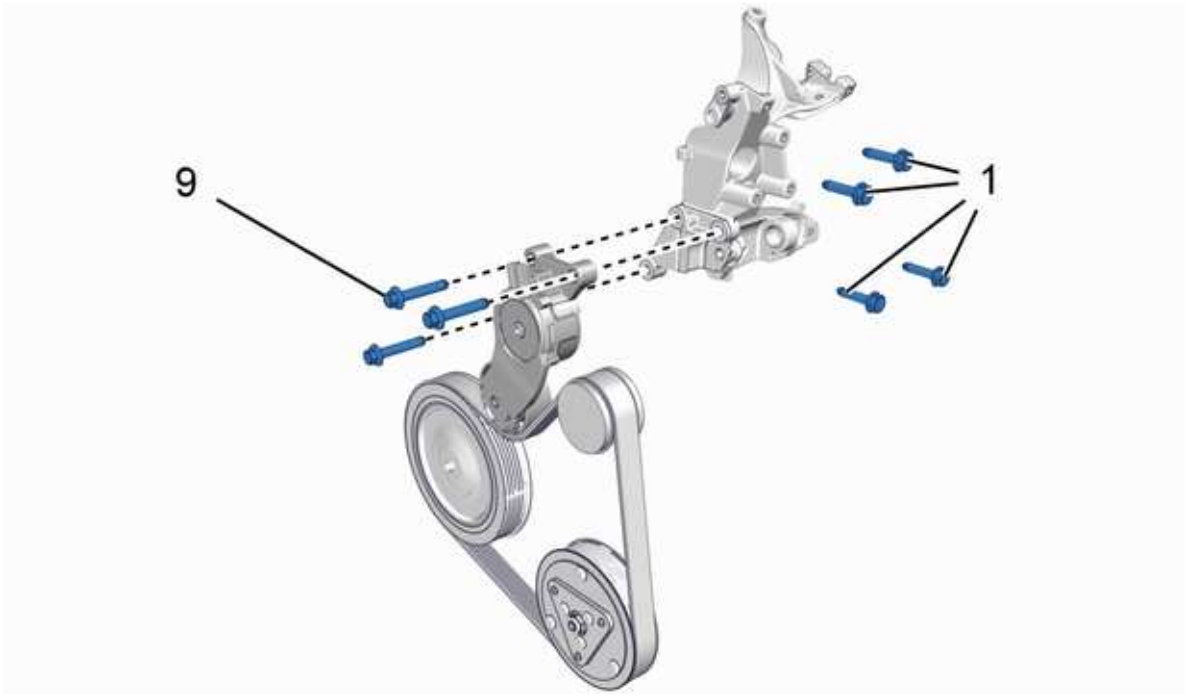

b1bb0mkd

Reference	Designation	Tightening torque
(1)	bolts (Alternator upper support)	2 daNm
(9)	bolts (Dynamic roller tensioner)	2 daNm

9 - 5 - Dynamic roller tensioner - Hydraulic power steering - Without stop and start

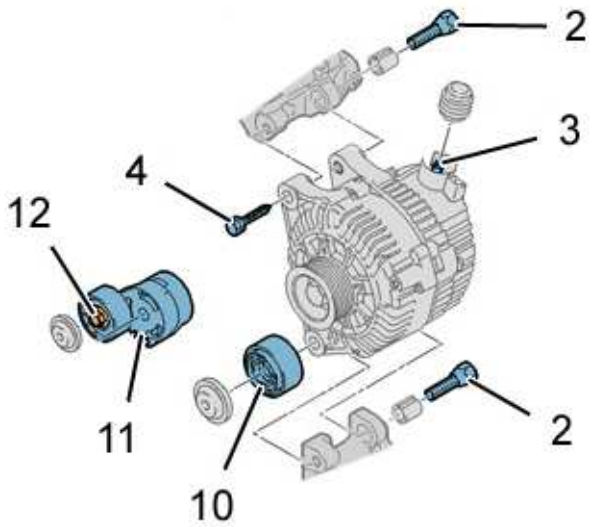

b1bb1djd

Reference	Designation	Tightening torque
(2)	bolts (Alternator)	4,9 daNm
(3)	nut (Alternator power circuit)	1,6 daNm
(4)	bolts (Alternator)	4,1 daNm
(10)	bolts (Roller tensioner)	4,5 daNm
(11)	bolts (Automatic roller tensioner)	3 daNm
(12)	bolts (Automatic roller tensioner)	2,1 daNm

10 - ENGINE EQUIPMENT - STOP AND START VERSION

10 - 1 - Reversible alternator - STOP AND START version

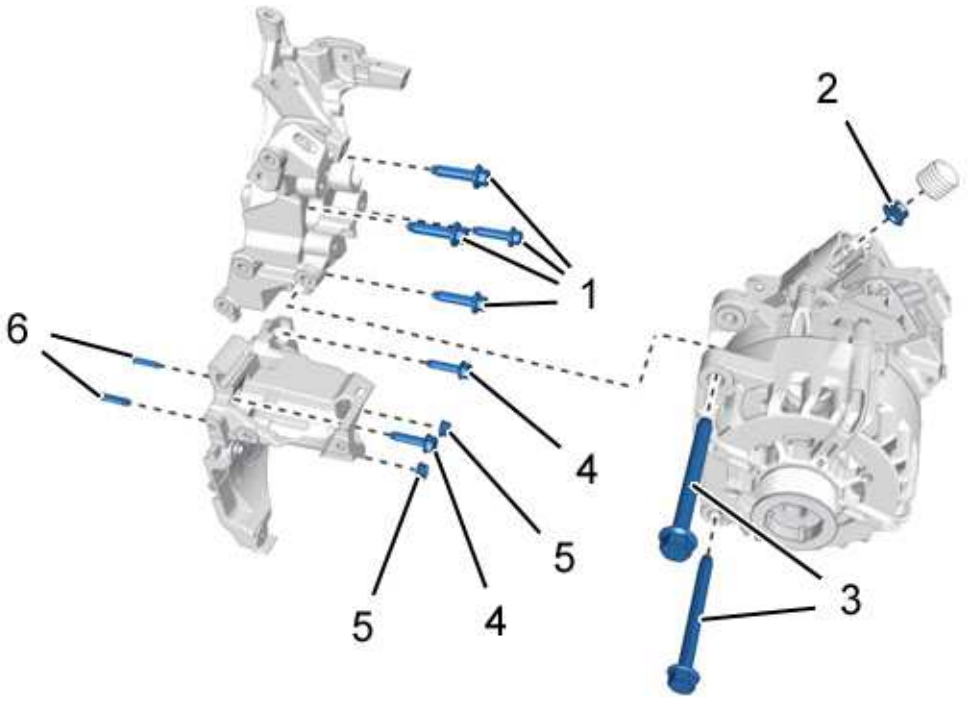

b1bb22id

Reference	Designation	Tightening torque
(1)	bolts (Multifunction support)	2 daNm
(2)	nut(Alternator power circuit)	1,6 daNm
(3)	bolts (Reversible alternator)	4,3 daNm
(4)	bolts (Air conditioning compressor support)	2 daNm
(5)	nuts (Air conditioning compressor support)	2 daNm
(6)	studs (Air conditioning compressor support)	0,6 daNm

10 - 2 - Version with air conditioning - STOP AND START version

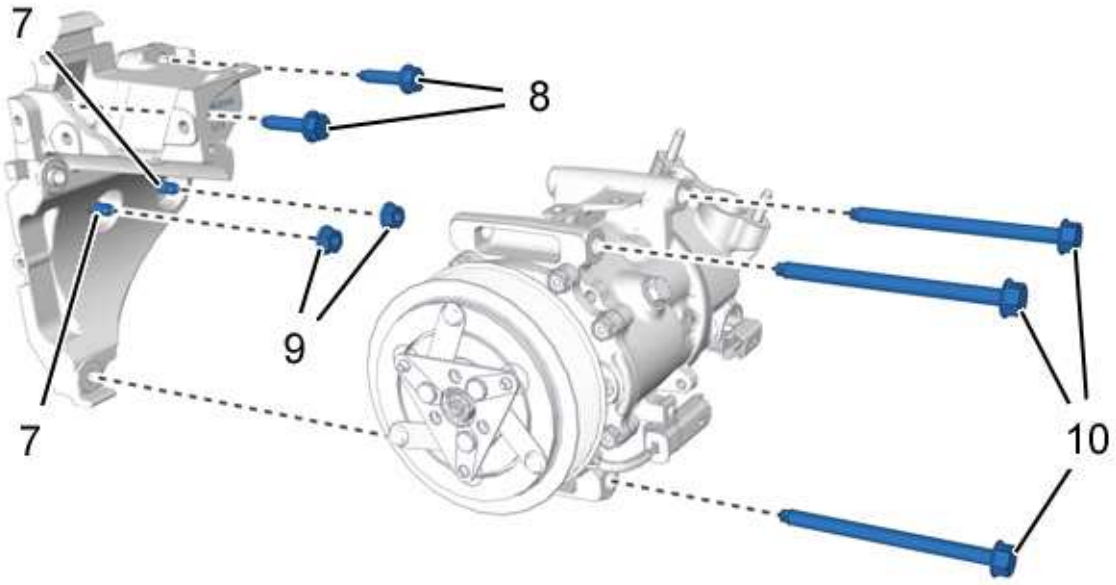

b1bb22jd

Reference	Designation	Tightening torque
(7)	studs (Air conditioning compressor support)	0,6 daNm
(8)	bolts (Air conditioning compressor support)	2 daNm
(9)	nuts (Air conditioning compressor support)	2 daNm
(10)	bolts (air conditioning compressor)	2,4 daNm

10 - 3 - Version without air conditioning - STOP AND START version

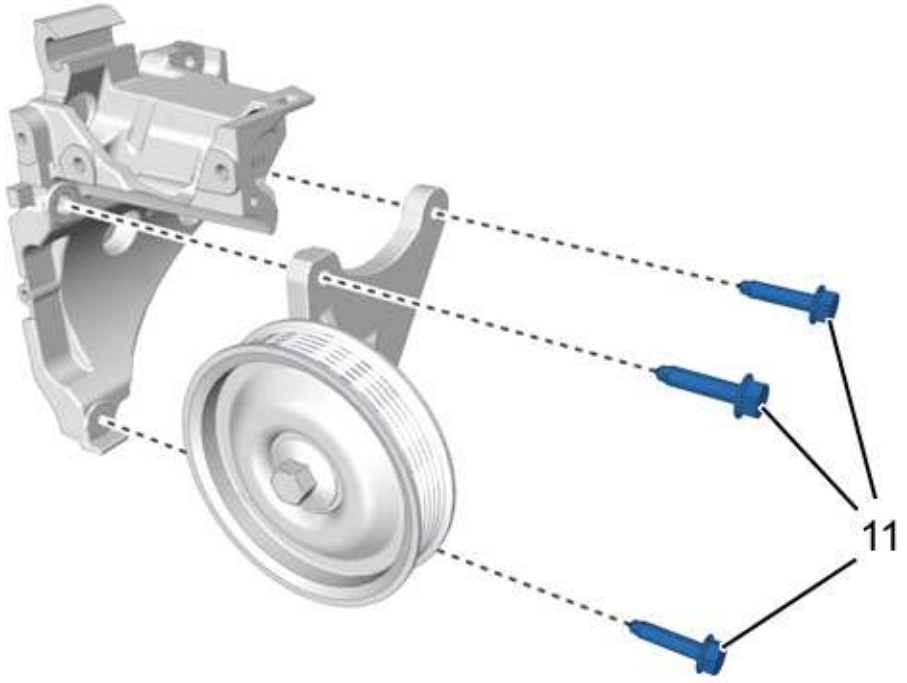

b1bb22kd

Reference	Designation	Tightening torque
(11)	bolts (Ancillary drive belt roller pulley support)	2 daNm

10 - 4 - Dynamic tensioner rollers - STOP AND START version

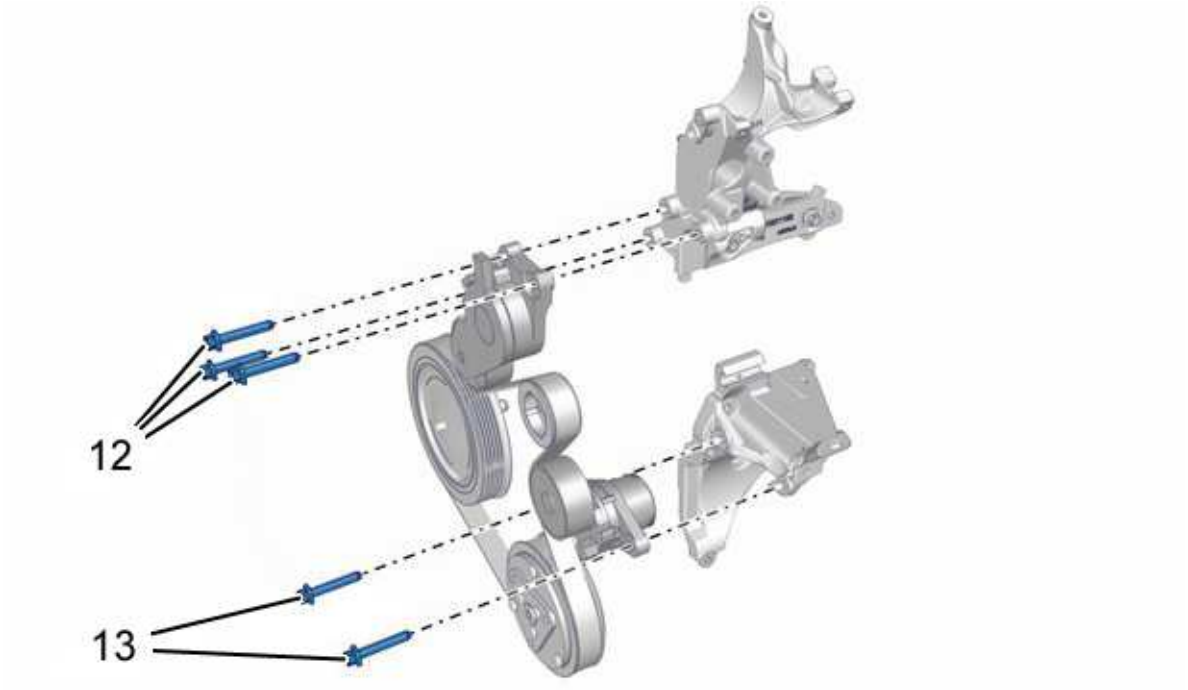

b1bb22ld

Reference	Designation	Tightening torque
(12)	bolts (Upper dynamic tensioner roller)	2 daNm
(13)	bolts (Lower dynamic tensioner roller)	2 daNm

11 - STARTER

11 - 1 - Tightening torques

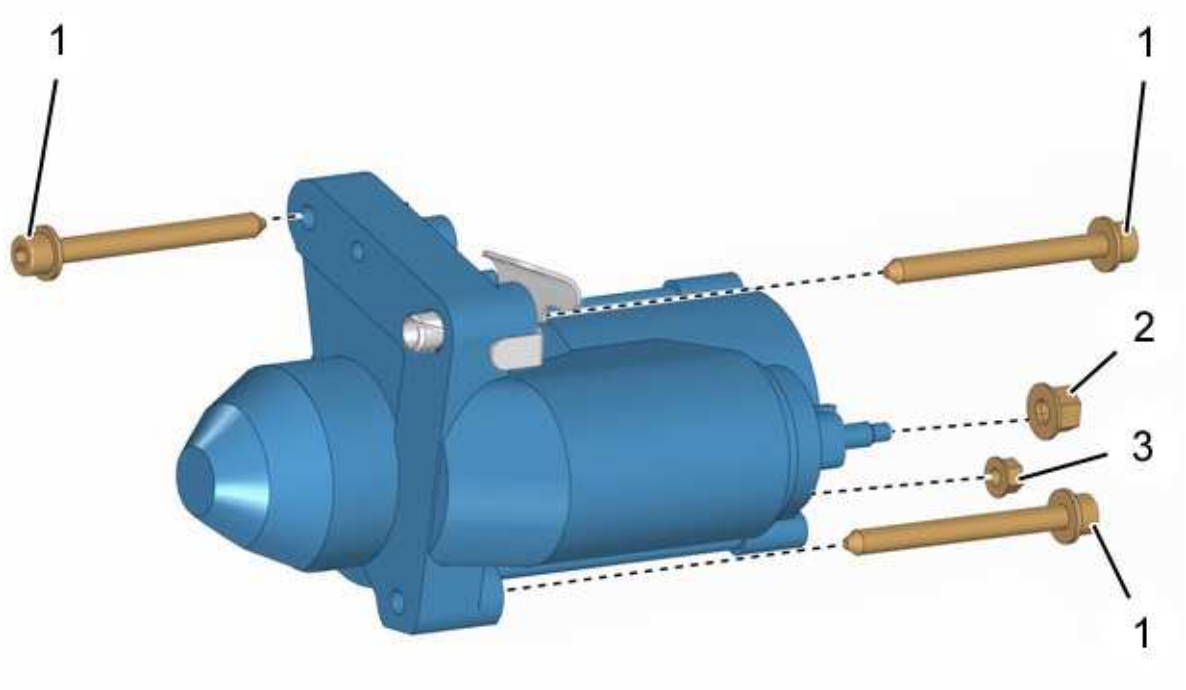

d1bb00hd

Reference	Fixings	Tightening torque
(1)	bolts (Starter (*)	2 daNm
(2)	nut(Starter supply cable)	1 daNm
(3)	nut(Starter energising cable)	0,5 daNm
(*) Follow the tightening sequence		

11 - 2 - Sequence of tightening the bolts (1)

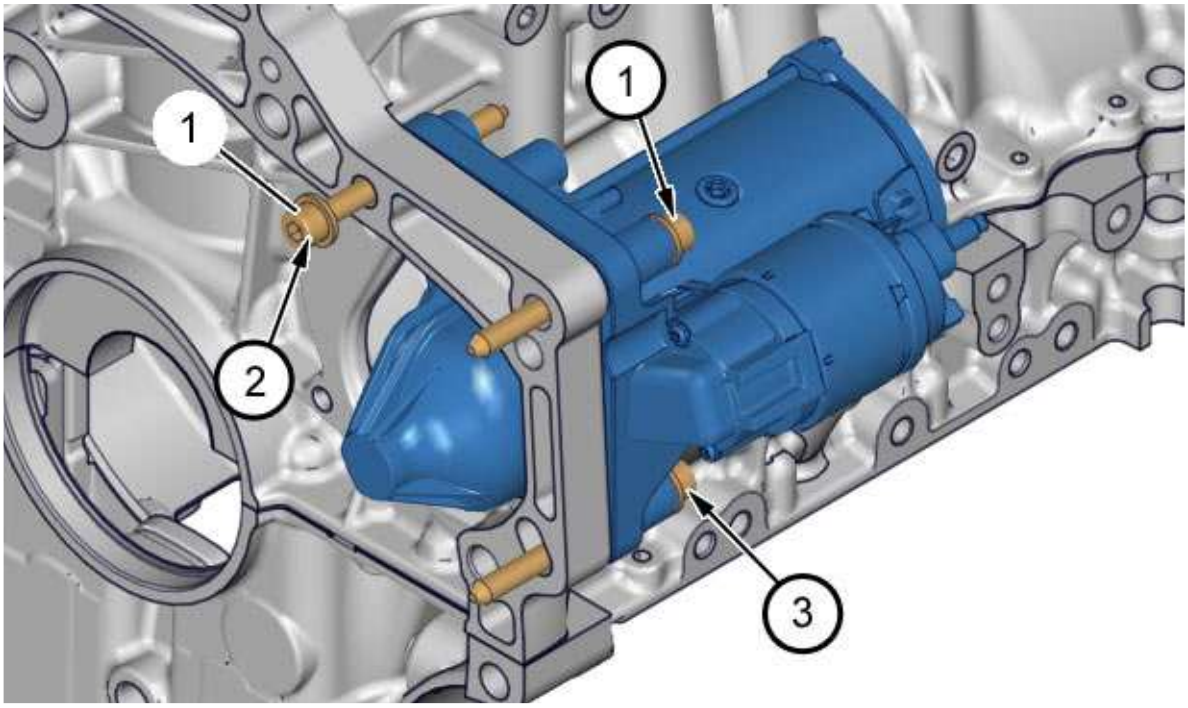

d1bb00kd

WARNING : Follow the tightening sequence

CHECKING AND ADJUSTING VALUES : DV6C - DV6CM - DV6C UE6 ENGINES

1 - FOREWORD

1 - 1 - Units of pressure

1 - Units of pressure in bars.

> **NOTE :** One bar has the advantage of being close to the average atmospheric pressure at sea level

2 - Unit of pressure in millimetres of mercury (symbol: mmHg) or Torr (symbol: Torr).

This unit of measurement of pressure was origially defined as the pressure exerted at 0°C by a 1 millimetre column of mercury, later indexed to the atmospheric pressure.

The pressure values indicated in the tables below are the values read on the pressure gauge (Relative pressure).

> **NOTE :** Relative pressure is equal to absolute pressure minus atmospheric pressure

1 - 2 - Units of tension

The SEEM unit measures by deflection of the static tension of the belt, by deforming a portion of its length.

2 - GENERAL ENGINE INFORMATION

2 - 1 - Engine DV6C EURO 5

Engine type	DV6C	DV6C	DV6C	DV6C
Engine legislative type	9HR	9HC	9HL	9HD
Cubic capacity	1560 cc			
Fuel	Diesel			
Maximum power	82 kW	85 kW	82 kW	84 kW
Engine speed at maximum power	3600 rpm			
Maximum torque	27 daNm		24 daNm	27 daNm
Engine speed at maximum torque	1750 rpm			

2 - 2 - DV6C M engine

Engine type	DV6C M	DV6C M
Engine legislative type	9HG	9HG
Cubic capacity	1560 cc	
Fuel	Diesel	
Maximum power	80 kW	84 kW
Engine speed at maximum power	3600 rpm	
Maximum torque	24 daNm	25,4 daNm

Engine speed at maximum torque	1750 rpm

2 - 3 - Engine DV6C EURO 6

Engine type	DV6C UE6
Engine legislative type	9HD
Cubic capacity	1560 cc
Fuel	Diesel
Maximum power	84 kW
Engine speed at maximum power	3600 rpm
Maximum torque	27 daNm
Engine speed at maximum torque	1750 rpm

3 - OIL CAPACITY

Oil capacity without replacement of the filter cartridge	3,25 litres
Oil capacity with replacement of the oil filter	3,75 litres
Capacity between minimum and maximum on the oil gauge	1,5 litre

Oil change interval : Refer to the maintenance schedule.

WARNING : Check the oil level systematically using the manual oil dipstick

4 - OIL PRESSURE

NOTE : Check the oil level with the engine cold

WARNING : Oil pressure is checked with the engine hot after checking the oil level (110 °C)

Engine speed	Minimum oil pressure
1000 rpm	1,3 bar
4000 rpm	3,5 bars

WARNING : Carry out work on the engine if the oil pressure values are below those in the table

5 - ANCILLARY DRIVE BELT

With and without air conditioning	By dynamic roller tensioner

6 - TIMING BELT

Belt tension	By mechanical tensioner roller

7 - CYLINDER HEAD BOLTS

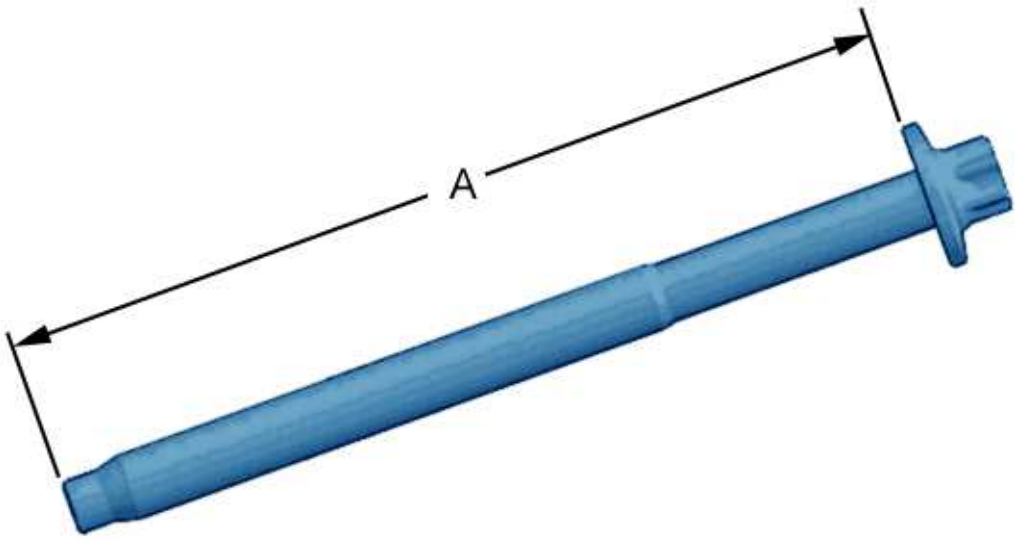

b1bb0vtd

NOTE : Do not use cylinder head bolts that are longer than "A" mm, use new bolts

Designation	"A"
Maximum length under heads of the screws	149 mm

8 - PRESSURE, ENGINE END OF COMPRESSION

Measure the pressure at the end of compression, in order, on cylinders 1, 2, 3 and 4.

The maximum discrepancy between 2 cylinders should be 5 bars.

WARNING : Always search for the origins of fault(s), where the values measured are found to be significantly out

9 - BOOST PRESSURE

Designation	Boost pressure
2500 rpm	0,2 bar
4000 rpm	0,6 bar

10 - AIR SUPPLY CIRCUIT

10 - 1 - Vacuum pump

Designation	Negative pressure
Idling	0,9 ± 0,1 bar

10 - 2 - Turbocharger wastegate valve

Turbocharger - make MHI (According to equipment).

Turbocharger wastegate valve	Movement of the regulation valve rod
200 Mbar	3,7 mm
500 Mbar	12,2 mm
Greater than 600 mbar	Maximum

11 - LOW PRESSURE FUEL SUPPLY CIRCUIT

Reference values Engine idling or under starter motor for less than 15 seconds (If the engine does not start)	Vacuum measured by the pressure gauge [4073-T.A]	Vacuum measured by the pressure gauge [1604-A]
Vacuum values to identify an air leak on the low-pressure circuit	D < 7,5 cmHg	D < 100 Mbar
Normal vacuum values	7,5 cmHg < D < 22,5 cmHg	100 Mbar < D < 300 Mbar
Vacuum values to identify a block on the low-pressure circuit (Clogged fuel filter,….)	D > 22,5 cmHg	D > 300 Mbar

CHECK : ANCILLARY DRIVE BELT

ESSENTIAL : Observe the safety and cleanliness recommendations

1 - DYNAMIC ROLLER TENSIONER

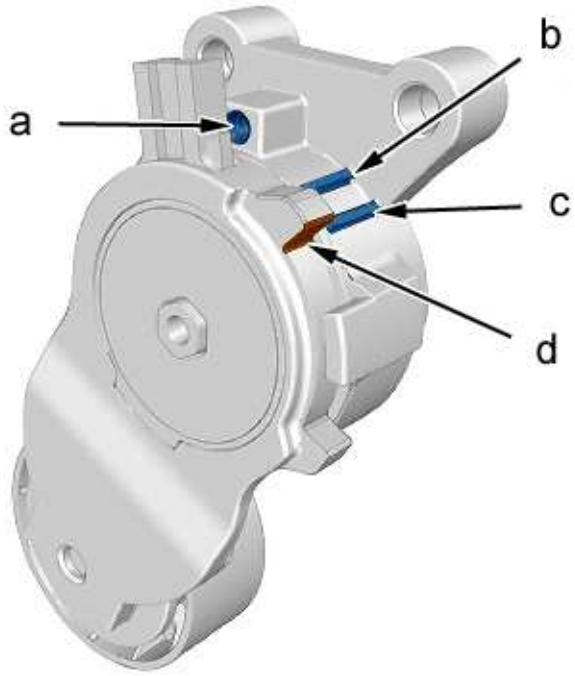

b1bd06wd

"a" Setting hole.

"b" Maximum elongation mark.

"c" Mark for nil extension.

"d" Mark for checking the extension of the belt .

NOTE : This marking system permits checking of the extension of the ancillary drive belt

NOTE : When the marks "b" and "d" come together, the belt should be replaced

2 - ANCILLARY DRIVE BELT

Visually check the extension of the ancillary drive belt on the dynamic tensioner.

NOTE : If marks "b" and "d" are aligned, replace the ancillary drive belt

WARNING : Mark the direction of rotation of the ancillary drive belt before removing it

Remove the accessories drive belt .

Confirm the absence of points of resistance, noise and traces of grease on the dynamic tensioner and accessory pulleys.

Refit the ancillary belt .

Turn the engine through 4 revolutions and check the alignment of the accessory drive belt.

> **NOTE :** The ancillary drive belt must be positioned correctly on the dynamic tensioner and in the pulley grooves

SAFETY AND CLEANLINESS RECOMMENDATIONS : FOR ALL REPAIRS

1 - SUMMARY

The Safety and Cleanliness Recommendations procedure describes the following sections :

- Preamble
- Before taking any action
- After any adjustment
- Electric or hybrid vehicles
- Stop and start vehicles fitted with a central voltage retention device
- Petrol direct injection system
- HDI direct injection system
- Particle filter
- Hydraulic suspension
- Pneumatic suspension
- Pyrotechnic system
- Welding
- Air conditioning system
- Brake circuit
- Urea circuit

2 - PREAMBLE

2 - 1 - General instructions

All operations must be carried out according to the following instructions and regulations :

- Competent health authorities
- Prevention of accidents
- Protection of the environment

ESSENTIAL : Operations must be performed by specialist personnel who are aware of the safety instructions and precautions to be taken

WARNING : Observe the tightening torques using a torque wrench which is checked regularly

2 - 2 - Individual protections

The wearing of individual protection equipment (EPI) is compulsory in order to work safely on any operation.

The following items of personal protective equipment are compulsory :

- Trousers/overalls or suitable combination
- Safety shoes

Depending on the location and the type of operation, these items of individual protection equipment are compulsory: :

- Safety helmet, when operating underneath the vehicle
- Protection goggles, when working on fluid circuits, fuel circuits, air circuits, etc. or for operations that could involve the suspension or projection of particles in the air
- Face masks, for operations that could involve the suspension or projection of particles in the air
- Safety gloves, to guard against cuts or exposure to chemical products
- Ear protections, when working in a noisy environment

All these items of individual protection equipment are available in your Parts shop.

If necessary, consult the Replacement Parts sales manager.

2 - 3 - Protecting the vehicle

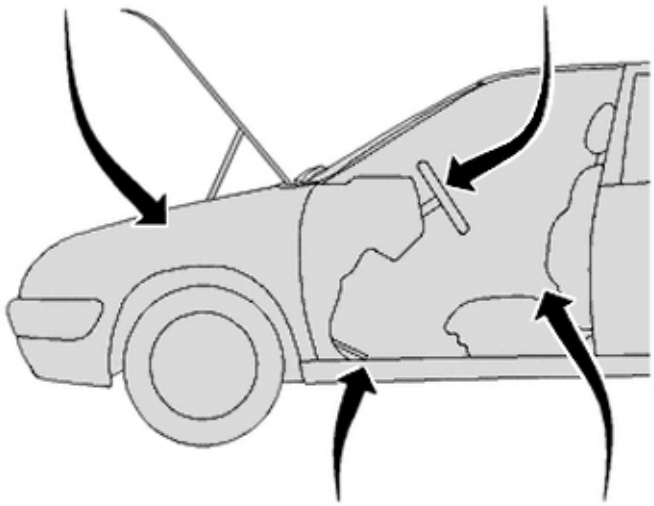

e2am008d

Place a protective cover on the following :

- Front wings
- Driver's seat
- Floor carpet (driver's side)
- The steering wheel

2 - 4 - Working area

The working area should be clean and tidy.

2 - 5 - Environment

Respect the environmental regulations :

- Separation and collection of waste

- Ejection of used water
- Air pollution
- Noise emissions

3 - BEFORE TAKING ANY ACTION

ESSENTIAL : Depending on the repair to be carried out, respect the recommendations for lifting and supporting the vehicle (hoist or stands)

Warning :

- Before disconnecting the battery, partially open the door windows as they could break or damage the passenger compartment side upper trim if the doors are opened or closed (Vehicles with frameless doors)
- Before disconnecting the battery, leave the tailgate or boot lid open (Vehicles with battery in the boot)
- After the ignition has been switched off : Wait 4 minutes before disconnecting the battery to ensure that the programmed values of the various ECUs are stored
- Using cloths may cause fluff to enter the hydraulic circuits - Use special lint free workshop paper or a chamois leather

4 - AFTER ANY ADJUSTMENT

Instructions to be followed	
Parts involved	Recommendations
Fuel system	Whenever the fuel circuit has been opened, after refitting check the locking of the snap- on unions by pulling/pushing on them
	Whenever the fuel circuit has been opened, check there are no leaks on the whole of the fuel supply line up to the injectors. Check there are no leaks on the fuel return line as far as the tank, at all engine speeds
Lubrication system	Whenever the oil circuit has been opened (oil filter, oil vapour, turbocharger unions, etc) check there are no oil leaks (engine hot), at all engine speeds
Hydraulic clutch control circuit	Whenever the hydraulic clutch contro circuitt has been opened, after refitting, check the locking of the unions, including the bleed valve, and the absence of leaks in repeated operation
Exhaust circuit	After any work on the exhaust system, check the absence of gas leaks on the exhaust, at all engine speeds
Hydraulic power steering circuit	Whenever the hydraulic power steering circuit has been opened, after refitting, check the locking of the unions and the absence of leaks in repeated operation

Automatic gearbox or controlled manual gearbox	After any work on an automatic or piloted gearbox, after refitting, check the absence of oil leaks at all engine speeds

5 - ELECTRIC OR HYBRID VEHICLES

NOTE : The provisions of this chapter apply to the electric drive network and those components supplied directly by the traction battery

The electric or hybrid vehicle has a traction battery with voltage higher than 200 V and with current greater than 10 mA.

ESSENTIAL : Only those personnel that have received training specific to electric or hybrid vehicles are qualified to work on the vehicle's electrical system (please observe the regulations that are in force in the country concerned)

ESSENTIAL : Before undertaking any maintenance and repair work on an electric or hybrid vehicle, it is essential to inform yourself of the risks involved and to apply the compulsory safety procedures

5 - 1 - Dangers of an electric current

WARNING : An electric or hybrid vehicle is no ordinary vehicle, it can be the source of serious accidents if precautions are not taken during certain operations in After-Sales

Contrary to widespread belief, the risk of electrocution is not directly linked to the voltage, but depends principally on the intensity of the current (amperage) and on the length of time it takes to pass through the body.

Ampères	Phenomenon caused	Consequences
10 mA	Repulsion	Uncontrolled reactions (dropping of components)
Between 10 and 25 mA	Muscular contraction	Involuntary gripping of components on touch (start of tetanisation, onset of burning)
From 25 mA	Contraction of the thorax muscles (if the current passes through the upper part of the body)	Asphyxia if no action taken (artificial respiration)
Beyond 30 mA	Cardiac fibrillation	Fatality without immediate specialised medical attention

Various factors determine the amount of current which may pass through the human body :

- The voltage
- The tightness of grip (piercing of the skin)
- The contact pressure

- Perspiration
- Ambiant humidity

5 - 2 - Workshop - Work station

It is only sensible to keep to certain rules of safety when installing a work station for an electric or hybrid vehicle in the workshop :

- The work station must be separated off by a safety cordon itself secured on permanent posts
- A notice must mention that only those personnel who are qualified to work on electric vehicles may enter the work area
- An electric or hybrid vehicle must be easily identifiable : Attach the notice provided to this effect either to the vehicle bonnet or to the rear view mirror
- For normal recharging of the traction battery : Use a 230 V - 10 A to 16 A socket (depending on the country) with no other consuming element attached, fitted with an earth connection and protected by a thermo-magnetic circuit breaker of 16 to 20 A with a differential block equal to 30 mA (one protector per socket)

Close to the work station that has the sign "electric or hybrid vehicle" there must be the following elements :

- A fire extinguisher specific to the battery or batteries fitted on the vehicle(s)
- A water supply for heavy rinsing in the event of contact with the electrolyte

5 - 3 - Protective equipment

Instructions to be followed	
Obligation / Prohibition	Recommendations
Obligation	Wear a helmet complete with visor, as well as gloves that insulate from both heat and electric current, for taking measurements of voltage and/or depowering the vehicle
	Before taking any action : Check all your items of individual protection
	Check that the protective gloves are not torn (inflate the gloves)
	Check that the visor of the protection helmet is not scratched or cracked
Prohibition	For any operation, the wearing or carrying of items that are made of metal or conductive of electric current (rings, watches, belt buckles, etc.) is forbidden

5 - 4 - Safety instructions

ESSENTIAL : It is essential to carry out a check on the voltage, using a voltage absence verifier on the affected vehicle

ESSENTIAL : Before taking any action : Test the checking equipment

Test the following functions of the multimeter :

- Ohmmeter
- Voltmeter

WARNING : Only a voltage absence verifier should be used for checking the voltage

Check that the leads and probes of the voltage absence verifier (insulations and fixings) are in good condition.

Use the voltage absence verifier to check the voltage of a known voltage source (E.g. : 230 V mains socket).

ESSENTIAL : It is forbidden to carry out operations or electrical checks on the electrical network when it is powered up

ESSENTIAL : Disconnect the vehicle electrical supply (In accordance with the procedure that is specific to the type of vehicle)

WARNING : Depowering the vehicle consists of "cutting off the current" from the traction battery

ESSENTIAL : The action of depowering the vehicle must be taken by an operator specially trained for this purpose

ESSENTIAL : Disconnect the charging cable from the 230 volt mains before carrying out any work on the vehicle (If it is a rechargeable vehicle)

Depowering is essential for any operation on the following components :

- Components of the electric drive train
- Electric machines
- Electronic control units
- Traction battery
- Charging socket
- Traction chain tension cables (Orange colour)
- Electric cabin heating (Orange colour)
- Electric air conditioning compressor (Orange colour)

Depowering is essential for the following types of bodyworking :

- Electric spot welding
- Grinding, drilling, cutting in proximity to components of the traction chain

ESSENTIAL : The temperature of the paint cabin must not exceed 70 °C

Installation and de-installation of electrical checking and measuring equipment (multimeter).

In cases where the vehicle has an isolating device (fuse or circuit-breaker) for the traction battery, the following operations are compulsory when depowering :

- Remove the isolating fuse
- Or action (trigger) the circuit-breaker

ESSENTIAL : The isolating fuse must be stored in a location that is locked with a key (in accordance with the depowering procedure)

ESSENTIAL : Only the person who has removed the isolating fuse or triggered the circuit-breaker is authorised to refit the isolating fuse or action (release) the circuit-breaker

ESSENTIAL : After the work, reconnect the vehicle electrical supply (in accordance with the procedure that is specific to the type of vehicle)

WARNING : The action of reconnecting the vehicle consists of "restoring the current" from the traction battery

ESSENTIAL : The action of reconnecting the vehicle must be taken by an operator specially trained for this purpose

ESSENTIAL : After any operation on a component of the traction chain or on the cabling : Check the insulation

5 - 5 - Cleanliness instructions

WARNING : After uncoupling them, block the unions of the system that cools the components of the traction chain with plugs, to prevent the entry of any impurities

WARNING : After disconnecting them, place the voltage cable end and base end connectors in plastic bags

The components that have been removed must be stored away from any dust.

5 - 6 - Damaged traction battery

In an accident, internal destruction of a pack may lead to leaking of electrolyte from one of the battery compartments.

ESSENTIAL : Protective gloves and glasses must be worn when carrying out any work

Electrolyte causes serious burns if it comes into contact with the skin.

In the event of an accident, immediately rinse the affected area of skin with large amounts of water.

If the body of the vehicle and the ground are contaminated by electrolyte, wash them immediately with large quantities of running water.

6 - STOP AND START VEHICLES FITTED WITH A CENTRAL VOLTAGE RETENTION DEVICE (DMTC)

The central voltage retention device is composed of a switch control unit and a power accumulator (UCAP).

The power accumulator (UCAP) contains aceto-nitrile, a fluid that is toxic (to inhale and to touch), irritating to the eyes and inflammable.

ESSENTIAL : Opening up the power accumulator (UCAP) is forbidden

6 - 1 - Safety instructions

ESSENTIAL : Before any intervention, it is essential to put on the appropriate gloves and goggles

ESSENTIAL : Before any intervention on a power accumulator (UCAP) that is either damaged or faulty, check the condition of the breathing mask

ESSENTIAL : Before handling it, visually inspect the power accumulator (no leaks or traces of salt)

ESSENTIAL : If there is a leak, trace of salt, or any mechanical alteration of the power accumulator (UCAP), it is essential to use new gloves and a suitable protective breathing mask, throwing away all these protections at the end of the operation

ESSENTIAL : Before any intervention, check the equipment for discharging the power accumulator (UCAP) (in accordance with the power accumulator (UCAP) discharging procedure)

ESSENTIAL : Replace the gloves if there is contact with the aceto-nitrile for longer than 15 minutes

ESSENTIAL : In the case of a leak, always replace the faulty power accumulator (UCAP) and place it in a hermetically-sealed bag available from Replacement Parts

ESSENTIAL : Before any intervention on one of the components of the DMTC (switch control unit or power accumulator (UCAP)), discharge the power accumulator (UCAP) (using special equipment)

ESSENTIAL : Immediately after removing it, put the power accumulator (UCAP) in the hermetically-sealed bag provided for that purpose (available from Replacement Parts)

ESSENTIAL : The faulty power accumulator (UCAP) must either be entered into the recycling chain (DIS) or returned to Warranty, in the same packaging by which the new component was delivered, in the hermetically-sealed bag available from Replacement Parts

Storage requirements :

- A special labelling must be placed on the storage zone, describing the risks involved both by the contents and by entering the storage zone (the same labelling as that for the component)
- At ambient temperature (For preference between 0°C and 30°C)
- Out of direct sunlight
- In a storage zone that is ventilated (typically a space of more than 200 m3)
- Away from any dripping water
- Far away from any source of flame or spark
- Availability of CO2 extinguishers at the entrance to the storage zone and close to the labelling of the risks

WARNING : For any paint retouching operation producing only a local heating (on the component) below 80°C, it is not necessary to remove the central voltage retention device (DMTC) assembly

6 - 2 - Cleanliness instructions

The components that have been removed must be stored away from any dust.

6 - 3 - Damaged power accumulator

It is possible that the accumulator could lose its electrolyte as a result of being impacted or dropped.

In the event of a leaking of electrolyte :

- Remove any potential source of heat or spark
- Warn those in charge of safety of the location of the incident
- The operator must use the equipment for handling faulty components
- Immediately recover the liquid product after having covered it up with inert absorbent matter (For example: sand, earth)

- Keep the soiled absorbent matter in a dedicated receptacle
- Then clean the surface that has been soiled with copious amounts of water
- Ventilate the zone for a minimum of 5 minutes
- Do not dispose of water that has been polluted with aceto-nitrile down the drain

> **ESSENTIAL :** Prior to any operation, it is essential to put on goggles and to use new gloves as well as a suitable protective breathing mask, throwing away all these protections at the end of the operation

If there is any incident, immediately wash the skin affected with copious amounts of water for 15 minutes.

> **ESSENTIAL :** In all cases consult a doctor

7 - PETROL DIRECT INJECTION SYSTEM

7 - 1 - Safety instructions

> **ESSENTIAL :** In view of the extremely high pressures prevailing inside the fuel high pressure circuit, it is essential to respect the following rules

No smoking near to the high pressure circuit during repair work.

Avoid working near to a naked flame or sparks.

Engine running :

- Do not work on the high pressure fuel circuit
- Do not carry out any repair of the electrical control circuit of the petrol injectors
- Always remain out of the way of a possible jet of fuel which may cause serious injury
- Do not place your hand near to a leak on the high pressure fuel circuit

After the engine stops, wait 5 seconds before any operation so that the pressure in the petrol high pressure circuit can fall to a value around 30 bar.

> **ESSENTIAL :** Effect a return to atmospheric pressure using the fuel pressure venting pipe before operating on the fuel high pressure circuit

7 - 2 - Cleanliness instructions

> **ESSENTIAL :** The operator should wear clean overalls

Before handling the fuel injection circuit components, wash your hands thoroughly or use new plastic gloves.

The use of working gloves (leather, cotton, kevlar, etc) is prohibited when handling the fuel injection

circuit components.

Before working on the injection circuit, the connectors of the following sensitive components may have to be cleaned :

- Fuel delivery and return union
- High pressure fuel pump
- Fuel high pressure common injection rail
- Fuel high pressure sensor
- Fuel pressure regulator
- Petrol injectors

Have plugs ready before removing any component from the fuel injection circuit so as to minimise the time the latter is exposed to the air.

Use a clean brush and new degreaser for each operation.

> **ESSENTIAL :** After dismantling, immediately fit a blank to the connector of the sensitive components to prevent the ingress of impurities

Only take the plugs from the sachet after the component to be blanked has been removed.

The blanked components should be placed in a clean plastic bag.

> **WARNING :** After the opening of the fuel injection system, all cleaning is strictly forbidden

The plugs are to be used once only.

Recommended cleaning product : Degreaser SODIMAC 35.

8 - HDI DIRECT INJECTION SYSTEM

8 - 1 - Recommendations

> **WARNING :** The addition of additives, such as fuel circuit cleaners/remetallisers, is forbidden

8 - 2 - Safety instructions

> **ESSENTIAL :** In view of the extremely high pressures prevailing inside the fuel high pressure circuit, it is essential to respect the following rules

No smoking near to the high pressure circuit during repair work.

Avoid working near to a naked flame or sparks.

Engine running :

- Do not work on the high pressure fuel circuit
- Always remain out of the way of a possible jet of fuel which may cause serious injury
- Do not place your hand near to a leak on the high pressure fuel circuit
- Do not disconnect the fuel return pipe from the diesel injectors

After switching off the engine, wait for 30 seconds before starting any repair work.

> **NOTE :** This period of time is required to allow the high pressure fuel circuit to return to atmospheric pressure

8 - 3 - Cleanliness instructions

> **ESSENTIAL :** The operator should wear clean overalls

Before working on the injection circuit, the connectors of the following sensitive components may have to be cleaned (according to equipment) :

- Fuel filter
- High pressure fuel pump
- Third piston deactivator
- Flow solenoid valve
- Fuel high pressure regulator
- Fuel high pressure sensor
- Fuel high pressure common injection rail
- High pressure fuel pipes
- Low pressure fuel pipes
- Diesel injector body

> **ESSENTIAL :** After dismantling, immediately fit a blank to the connector of the sensitive components to prevent the ingress of impurities

Parts being repaired should be protected from dust.

9 - PARTICLE FILTER

9 - 1 - Safety instructions

> **ESSENTIAL :** Wait at least an hour before any operation on the exhaust line

Forced regeneration of the particle filter :

- Check that there are no aerosols or inflammable products inside the boot
- Protect yourself with high temperature gloves
- Connect the vehicle to a gas extractor approved for this type of repair
- Make the work area secure
- Make sure that nobody walks behind the vehicle during the forced regeneration

ESSENTIAL : Where the recommended installation is not available, carry out the forced regeneration of the particle filter outside the workshop, on an area of hard standing and remote from any inflammable materials

9 - 2 - Repair on the fuel additive circuit

ESSENTIAL : For all operations on the additive circuit, wear protective spectacles and gloves resistant to hydrocarbons

The work area should be ventilated.

In case of any substantial escape of additive :

- Wear a particle filtring breathing mask
- Collect as much as possible of the product
- Place the product thus collected in a suitably labelled receptacle
- Wash the area affected with copious amounts of water
- Dispose of solid substances and residues at an authorised collecting point

ESSENTIAL : If the vehicle has a rigid reservoir : The filling kit should be recycled after the repair. Any container of "Eolys" additive that has been opened should not be kept

ESSENTIAL : If the vehicle has a flexible reservoir : The flexible additive reservoir must be recycled after a repair (exchange)

10 - HYDRAULIC SUSPENSION

10 - 1 - Safety instructions

ESSENTIAL : Do not operate on the hydraulic circuit without having lowered the pressure

ESSENTIAL : The hydraulic circuit must be depressurised with the wheels not hanging

Wait for the pressure to fall completely in the hydraulic circuit before disconnecting the unions on the following components (risk of an abrupt sinking of the vehicle) :

- Integrated BHI (BHI)
- Front suspension cylinder
- Rear suspension cylinder
- Front firmness regulator
- Rear firmness regulator
- Suspension pressure sensors

Engine running :

- Do not operate on the hydraulic suspension circuit
- Always stay out of range of a possible projection of fluid which could cause serious injuries

NOTE : In the event of the fluid LDS coming into contact with the eyes, rinse with copious amounts of water and contact a specialist

NOTE : In the event of the fluid LDS coming into contact with the skin for any length of time, wash with soap and water

WARNING : After switching off the engine, wait for 30 seconds before starting any repair work

ESSENTIAL : Do not remain underneath the vehicle during an adjustment of heights or an actuator test (solenoid valve)

ESSENTIAL : Any distortion of the wheel movement sensor supports is prohibited. If deformation is noticed, replace the part

10 - 2 - Cleanliness instructions

WARNING : Non-compliance with the cleanliness requirements may allow a contamination of the circuit and subsequent malfunctioning of the suspension

Before an operation on the suspension system, all the unions and hydraulic components should be cleaned.

ESSENTIAL : Recommended cleaning product : Degreaser SODIMAC 35

ESSENTIAL : After removal, immediately seal off the unions and hydraulic components with plugs. The plugs are to be used once only

Any component removed should be plugged and placed in a clean plastic bag.

ESSENTIAL : After removal, any cleaning using either chemical products or compressed air is strictly forbidden. Any LDS fluid recovered must not be re-used. Any topping up should be with new fluid

11 - PNEUMATIC SUSPENSION

11 - 1 - Safety instructions

ESSENTIAL : Deactivate the pneumatic suspension before lifting the vehicle (2 or 4 post lift, workshop jack or vehicle jack)

ESSENTIAL : Do not work on the pneumatic suspension circuit without releasing the pressure. Observe the pneumatic suspension circuit depressurisation procedure

11 - 2 - Cleanliness instructions

WARNING : Plug the pneumatic suspension circuit immediately to prevent destruction of the suspension compressor drying cartridge

WARNING : Failure to observe the instructions on cleanliness may result in contamination of the pneumatic circuit and a malfunction of the suspension

WARNING : Recommended cleaning product : Degreaser SODIMAC 35

Before carrying out any work on the suspension circuit, clean the unions and pneumatic components.

WARNING : Following removal, plug the unions and pneumatic components immediately

Any component removed should be plugged and placed in a clean plastic bag.

WARNING : After removal, any cleaning using either chemical products or compressed air is strictly forbidden

12 - PYROTECHNIC SYSTEM

ESSENTIAL : For any operation on the pyrotechnic systems : Wear antistatic shoes and gloves

ESSENTIAL : Apply the pyrotechnic component safety instructions

ESSENTIAL : Apply the procedure for disarming/arming the central airbags and seat belts system

13 - WELDING

Respect the safety and fire regulations.

Cover each piece of equipment with the appropriate individual protection (protection suit, protective goggles to guard against leaping sparks).

13 - 1 - Protection of electric and electronic equipment against currents induced by welding

implements (ECUs, battery, pyrotechnic components etc.)

In the case of any welding system powered by electricity, disconnect the vehicle battery (or batteries in the case of electric vehicles).

13 - 2 - Protection against sparks

Protect vulnerable equipment and paintwork from any leaping of sparks by the use of fire-resistant covers.

13 - 3 - Protection from heat

Components at risk of being damaged by either heat or flame produced by welding should be protected by using fire resistant covers or screens, or else by removing them.

Components or parts of components that could be damaged by heat conduction should be protected with a protective compound.

13 - 4 - Precautions to be taken on petrol or diesel vehicles

Never leave a fuel tank or circuit unclosed.

Never carry out a welding operation in proximity to inflammable fluid conduits or containers, even if they are empty (fuels, fuel additives, brake fluids, power steering or suspension fluids).

Depending on the closeness of these elements, protect them from heat and from sparks by using protective screens, or otherwise by removing them.

14 - AIR CONDITIONING SYSTEM

14 - 1 - Safety instructions

> **ESSENTIAL :** Always observe the general precautions

Wear gloves and protective goggles to avoid the risk of frostbite.

Do not handle the refrigerant near a flame or very hot object (e.g. cigarette) to avoid any risk of the emission of toxic vapours.

Work in a ventilated area.

Handle used compressor lubricating oil with care as it can contain acids.

> **ESSENTIAL :** The compressor lubricant is extremely hygroscopic, use new fluid for any operation

> **WARNING :** Never switch on the air conditioning system if the refrigerant circuit is drained. Do not remove the compressor filler plug when the circuit is full

14 - 2 - Precautions to be taken when opening the circuit

Plug all the conduits quickly to prevent the entry of humidity ; Using the set of plugs (-)1701-HZ.

New parts should be at ambient temperature before unpacking to avoid condensation.

The plugs in the component unions must be removed at the last moment before fitting.

> **WARNING :** Avoid fitting parts which are not fitted with plugs

The filtering and drying cartridge must not remain in the open air for than 5 minutes, even when connected to the air conditioning circuit (risk of saturation with humidity).

If the air conditioning circuit has been in the open air, it is necessary to replace the following components :

- The filtering and drying cartridge (or the condenser if the cartridge is incorporated in it)
- The compressor oil (Drain the air conditioning compressor)

14 - 3 - Precautions to be taken (With air conditioning compressor)

Handle the air conditioning compressors carefully :

- Do not hold the air conditioning compressor by the connectors or the pulley
- Do not place the air conditioning compressor on the pulley
- Avoid impacts on the pulley and connectors (fragile areas)
- Do not put air conditioning compressor oil or other lubricant on the clutch of the compressor

The air conditioning compressors must be stored in enclosed premises, between 5°C et 50°C.

The plastic plugs delivered with the new air conditioning compressor can be reused later.

If an air conditioning compressor is returned to the supplier, pack the compressor correctly to prevent any damage during transport.

> **WARNING :** When the air conditioning compressor is started for the first time, do not exceed 1500 rpm for the first minute in order to distribute the oil in the air conditioning circuit

14 - 4 - Special features : Air-conditioning compressor without clutch (DENSO)

The "DENSO" compressors without clutch operate continuously while the engine is running.

> **WARNING :** Do not operate the compressor (and consequently the engine) without refrigerant in the air conditioning circuit and above all under vacuum extraction

If it is necessary to run the engine without there being any refrigerant in the air conditioning circuit :

- The air conditioning must be switched off

- The speed of the air conditioning compressor must be less than 2000 rpm for a maximum duration of 15 minutes

> **WARNING :** If these precautions cannot be complied with, replace the air conditioning compressor

14 - 5 - Precautions to be taken when fitting unions

Use only new seals.

> **WARNING :** Lubricate the seals with compressor oil

Tighten the unions to the specified torque using a second spanner whenever possible.

14 - 6 - Electrical checks

Before re-connecting a connector, check :

- The condition of the various contacts (distortion, corrosion ...)
- The presence of the seal
- The presence and condition of the connector locking mechanism

During electrical checks :

- The battery must be fully charged
- Never use a voltage source greater than 12 V
- Never use a test lamp
- Do not produce sparks

Do not disconnect :

- The battery with the engine running
- The air conditioning ECU ; Ignition on

> **ESSENTIAL :** For the refrigerant draining/refilling operation : Consult the approved equipment instructions

15 - BRAKE CIRCUIT

> **NOTE :** The instructions of this section apply to the braking hydraulic circuit as well as to the vacuum assistance circuit

15 - 1 - Safety and cleanliness recommendations

Instructions to be followed	
Obligation / Prohibition	Recommendations
	Wear lint-free gloves coated with polyurethane on the palm and the end of the fingers

Obligation	Wear protective goggles
	No impurity is tolerated in the braking circuit
	The brake fluid is hygroscopic : Use new lubricant after repairs
	Any component removed should be plugged and placed in a clean plastic bag

WARNING : Non-compliance with the cleanliness requirements can lead to contamination and malfunctioning of the braking system

The environment of the work station and the associated equipment must guarantee the absence of contamination of the circuit by :

- Particulate pollution (environment, type of gloves, cloth, tools, etc.)
- Chemical pollution (solvent, lubricant, etc.)
- Moisture or any other element which could damage the quality of the product

15 - 2 - Precautions to be taken when opening the circuit

Instructions to be followed	
Obligation / Prohibition	Recommendations
Obligation	Before operating on the braking system, clean all the unions and hydraulic components
	After uncoupling, immediately plug the unions and hydraulic components with plastic protective plugs to prevent the entry of moisture and impurity. The protective plugs are single-use
	The protective plugs on the unions of the parts must be removed at the last minute before coupling
	The brake fluid is corrosive, clean up any splashes
	During the filling operation, the filler cap must be placed in readiness nearby in a flat, clean area
	The reservoir filter must be put in place immediately at the end of the filling operation, if filling with the filter assembled on the reservoir is not possible
	Handle the servo, master cylinder and reservoir assembly with care and without knocking it
Prohibition	Gripping and handling by the thrust rod, by the gaiter or by the reservoir is prohibited
	Resting on the parts is prohibited
	Any parts which have suffered a knock or damage must not be fitted

WARNING : Avoid fitting parts which do not have a protective plug

16 - UREA CIRCUIT

The urea solution is a colourless, aqueous liquid of pH10 which smells of ammonia.

ESSENTIAL : Never mix the urea solution with a product containing chlorine (risk of explosion)

16 - 1 - Personal protection equipment

ESSENTIAL : For all work on the urea circuit, wear protective goggles and gloves of the painting type (in addition to the work clothing)

ESSENTIAL : When draining the urea circuit, wear a spraying mask of the painting type

ESSENTIAL : Work in a ventilated area

16 - 2 - Instructions to be applied in the case of contact with the urea solution

ESSENTIAL : In case of contact with the skin : Remove the contaminated clothing, wash the skin carefully with soap and water, rinse thoroughly

ESSENTIAL : In case of contact with the eyes : Wash with plenty of soft water for 15 minutes, eyelids apart

ESSENTIAL : Ingestion : Rinse your mouth with water. Do not vomit

16 - 3 - Precaution to be taken before opening the urea circuit (excluding the urea reservoir filling - draining operation)

ESSENTIAL : Check that the urea circuit is not pressurised; using the diagnostic tool

ESSENTIAL : Drop the pressure using the diagnostic tool

16 - 4 - Draining the urea reservoir

ESSENTIAL : When draining the urea circuit, wear a spraying mask of the painting type

ESSENTIAL : Never mix the urea solution with a product containing chlorine (risk of explosion)

WARNING : The urea solution must not be mixed with other fluids to ensure that it can be recycled

SAFETY RECOMMENDATIONS : PYROTECHNIC SYSTEMS

1 - GENERAL

Do not disconnect :

- The battery with the engine running
- The ECU with ignition on

Before re-connecting a connector, check :

- The condition of the various contacts (distortion, corrosion ...)
- The presence and condition of the connector locking mechanism
- The absence of particles (Metal or other)

During electrical checks :

- The battery must be fully charged
- Never use a voltage source greater than 16 V
- Never use a test lamp
- Do not produce sparks

> **ESSENTIAL :** For any operation on the pyrotechnic systems ; Wear antistatic shoes and gloves

Apply the DE-ACTIVATION procedure for any repair work with the possibility of physical impact :

- Mechanical
- Sheet

E.g. spot facing, etc. and any welding.

Destroy the pyrotechnic components before sending the vehicle to the recycling centre.

If the attempts at destruction fail, wait a few moments before any operation or return the untriggered component to the warranty return centre.

2 - FEATURES OF THE SYSTEM

> **ESSENTIAL :** For any work on fascia panel, steering column, front seats, centralised airbags and seat belts system or for any specific welding or panel-beating work : Apply the procedure to deactivate the centralised airbag and seat belt system

> **WARNING :** The pre-tensioning components assembly must always be disconnected before using measuring instruments ; Ohmmeter or other measuring

instrument to check the electrical components and wires

WARNING : Any of the pyrotechnic components may be triggered if a powered measuring instrument is used for fault finding purposes on this system

WARNING : An ohmmeter can be used to make a resistance measurement when the checking tool (calibrated shunt) is connected to replace a pyrotechnic component

3 - REPAIRABILITY OF THE HARNESS

ESSENTIAL : After any deployment of the airbags and seat belts centralised system, thoroughly check all the electrical harness as well as the various connectors in the system

WARNING : Repair or connection of the electrical wires on the pyrotechnic component lines (from the ECU connection to the pyrotechnic component) is authorised as long as connection equipment RAYCHEM is used and the working procedures given in the instructions in kit RAYCHEM are respected

WARNING : Repair of the wires must be carried out with heat shrink sleeves and outer covers : [1228] kit

4 - PRECAUTIONS TO BE TAKEN : AIRBAGS

NOTE : Comply with the legislation in force in each country regarding the possession, transportation, and handling of pre-tensioning products

4 - 1 - Removing

ESSENTIAL : When removing an airbag, disconnect the supply connector first

In the case of an active or non-active airbag observed with the warning indicator :

- Apply the procedure to deactivate the centralised airbag and seat belt system
- Remove the airbag
- Store with the airbag upwards (The connector supported)

In the case of a triggered airbag :

- Wash your hands at the end of the operation
- If there is any contact of the residue with the eyes, rinse immediately with running water

4 - 2 - Refitting

ESSENTIAL : When refitting an airbag, connect the earth connector first

Ensure that the area around the replaced module is unoccupied.

When connecting the airbag, never put your head in the area which could be occupied by the inflated airbag.

Do not accidentally connect the system electrical supply.

Fit only the original parts calibrated according to the type of vehicle.

Apply the procedure to activate the centralised airbag and seat belt system.

Store with the airbag upwards (The connector supported).

After removal, store the airbag in a cupboard.

Do not use an ohmmeter or any other current generating source on the trigger.

Do not expose to temperatures above 100 degrees C or to flames.

Do not dismantle, cut, pierce, solder or modify the assembly.

Do not drop it or expose it to physical impacts.

Do not remove the shunt in the connector.

Do not expose to flames.

Never dispose of in land fill or waste bin unless triggered on or off the vehicle.

Never connect electrical harnesses to a pyrotechnic component other than those provided by the manufacturer.

Never refit a partly deployed airbag.

Transport the airbag by itself, bag upwards.

Do not put your arms round the airbag.

Carry the airbag close to the body, bag outwards.

Do not allow unauthorised persons to transport the airbag.

5 - PRECAUTIONS TO BE TAKEN : PRETENSIONING SEAT BELTS

NOTE : Comply with the legislation in force in each country regarding the possession,

transportation, and handling of pre-tensioning products

The operator working on these devices should observe the safety standards listed hereafter.

The pretensioner is triggered :

- If the trigger is supplied with an electrical current (including via an ohmmeter)
- If the trigger is subjected to a temperature greater than 100 degrees C

The principal dangers are, as regards the pretensioner :

- The whip-lash effect of rapid tensioning of the buckle
- The protrusion of the cable and the air release at the extremity of the cylinder

6 - PRECAUTIONS TO BE TAKEN : VEHICLE

6 - 1 - Removing

Apply the procedure to deactivate the centralised airbag and seat belt system.

Disconnect the pyrotechnic components at the interconnections or from the ignition modules according to the type of vehicle (the connectors are of short circuit type at the ignition module and interconnections).

6 - 2 - Refitting

Connect the pyrotechnic components at the interconnections or onto the ignition modules according to the type of vehicle.

Apply the procedure to activate the centralised airbag and seat belt system.

When ignition is switched on :

- If the pretensioner is under the seat, do not touch the seat belt buckle
- If the pretensioner is in the B/C post, do not touch the seat belt

Disconnect the battery when carrying out electrical welding operations.

Do not accidentally connect the system electrical supply.

Fit only the original parts calibrated according to the type of vehicle.

7 - PRECAUTIONS TO BE TAKEN : PRETENSIONER/INERTIA REEL

NOTE : Comply with the legislation in force in each country regarding the possession, transportation, and handling of pre-tensioning products

After removal, store the pyrotechnic components in a closed cabinet.

The use of an ohmmeter or any source generating current on the trigger is prohibited (risk of

deployment).

Do not expose to temperatures above 100 degrees C or to flames.

Do not carry by the buckle or the cable.

Never try to open an ignition device with a saw, etc. (heat).

Never throw into a tip or a bin without having first deployed the component in the vehicle.

Never destroy the component other than when secured in its original position.

Never connect any harnesses other than those specified by the manufacturer.

8 - ACTIVATION : CENTRAL SYSTEM FOR AIRBAGS AND PYROTECHNIC SEAT BELTS

The surroundings of the air bags and the pre-tensioning seat belts must be clear of objects or occupants.

Ignition off : Connect the air bag ecu connector .

Connect the battery negative cable.

On the driver's side, door open, ignition on, keeping the steering wheel module activation area clear.

Check the system is operating correctly by checking the airbag fault LEDs.

> **NOTE :** After disconnecting the battery, some electronic systems (injection, safety auto-reverse system ...) need an initialisation procedure ; Perform the appropriate initialisation procedures

DACTIVATION / ACTIVATION : CENTRAL AIRBAG AND SEATBELT SYSTEM

1 - DEACTIVATION

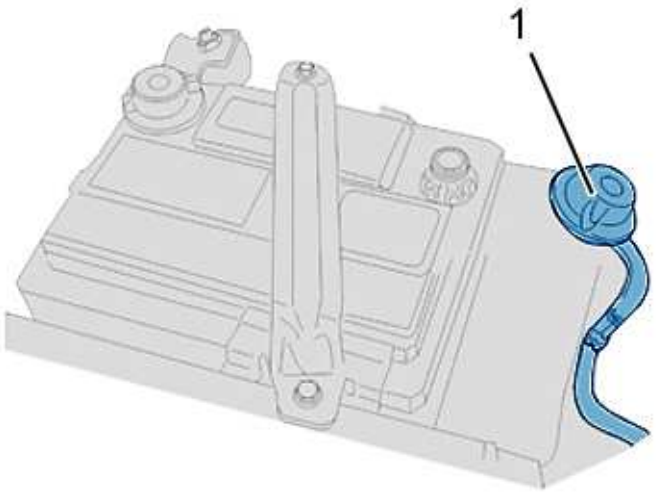

d1ap03cd

Slacken and then disconnect the negative cable (1) from the ancillaries battery.

Protect the cable and the negative terminal in order to prevent any contact.

> **WARNING :** Wait for at least 5 minutes before performing any operations (discharging of the airbag ECU power reserve)

> **WARNING :** The ECU must not be removed with the connector still connected under any circumstances

Disconnect the airbag ECU connector.

2 - ACTIVATION

Ignition off : Connect the airbag ECU connector.

> **ESSENTIAL :** Leave the doors open before reconnecting the ancillaries battery ; Switch on the ignition ; The area of the airbags and pyrotechnic seat belts should be kept clear, both of objects and of people

Reconnect the ancillaries battery negative cable.

Check the system is operating correctly by checking the airbag fault LEDs.

NOTE : Following disconnection of the ancillaries battery, certain electronic systems (injection, electric window with anti-pinch...) must be initialised ; Perform the appropriate initialisation procedures

NON OPERATION : PYROTECHNIC COMPONENTS

ESSENTIAL : Apply the centralised pretensioning seat belts system disarming procedure

ESSENTIAL : All of the vehicle's pyrotechnic components must be disarmed before the vehicle is scrapped (Driver´s and passenger´s airbags - Pretensioners - Side and curtain air bags - Steering column airbag)

1 - TOOLING

tool	Reference	Designation
[1227-A] [4155-T]  *e5akg37t*	[1227-A] [4155-T]	Harness for firing pyrotechnic charges
[1227-B] 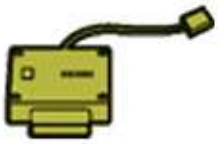 *e5akg38t*	[1227-B]	Centralised connection unit (32-24 way connector)

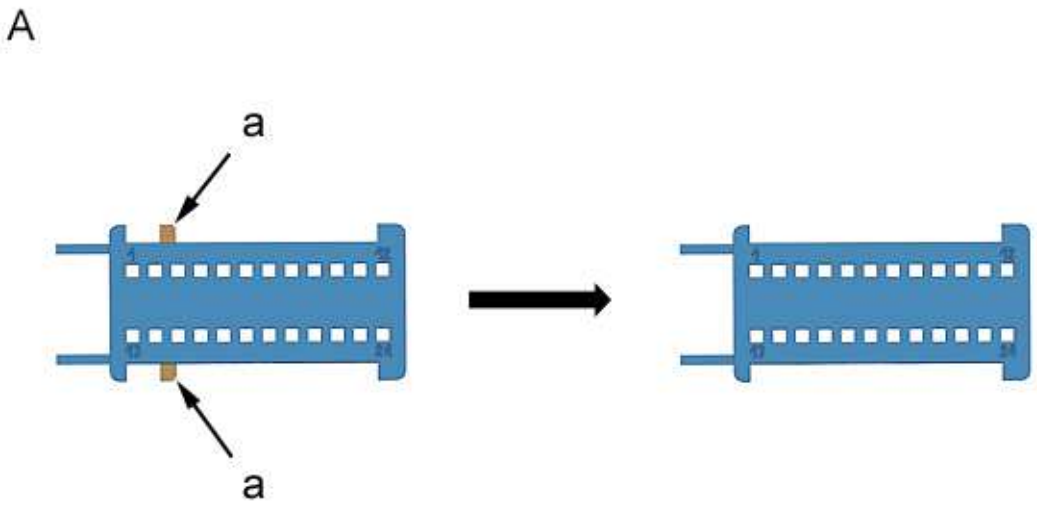

d2am01cd

"A" 24 way connector.

Remove the inhibitor tabs "a" from the 24-way connector to be able to insert them into the adapter [1227-B].

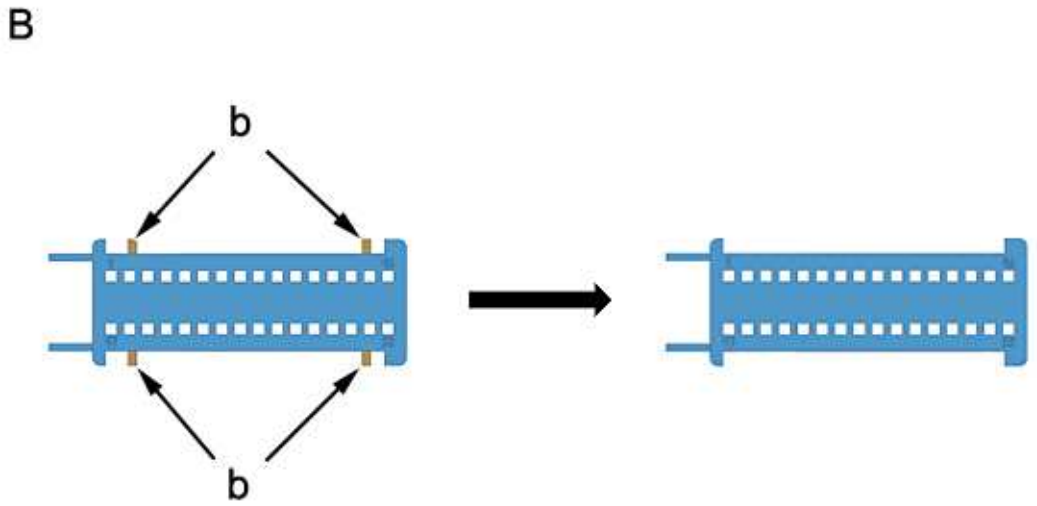

d2am01dd

"B" 32 way connector.

Remove the inhibitor tabs "b" from the 32-way connector to be able to insert them into the adapter [1227-B].

2 - SAFETY RECOMMENDATIONS

> **ESSENTIAL :** Apply the procedure for switching off the central airbag system

> **ESSENTIAL :** Before connecting the tool [1227-A / 4155-T], check that it is not live

If the attempt to destroy a pyrotechnic component fails, wait 10 minutes before intervening then return the pyrotechnic component to the supplier using Replacement Parts packaging.

3 - DESTRUCTION OF A PYROTECHNIC COMPONENT (ON THE OUTSIDE OF THE VEHICLE)

Remove the pyrotechnic component to be destroyed.

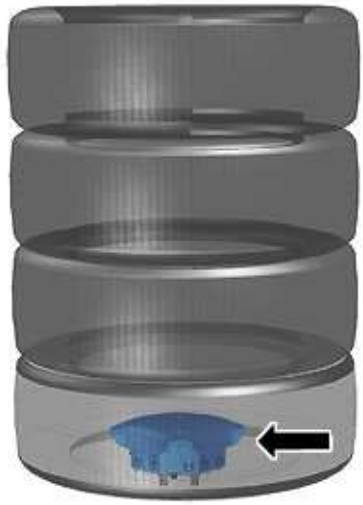

c5jm03jd

> **ESSENTIAL :** The destruction is carried out within a stack of old tyres

The positioning of the pyrotechnic component should allow for deployment of the air bag upwards to avoid any projection.

> **WARNING :** Check that the connector is locked on the pyrotechnic component prior to any triggering operation

Perform the following operations :

- Connect the tool [1227-A / 4155-T] to the pyrotechnic component
- Use the tool [1227-A / 4155-T] to maintain a safe distance
- Connect the tool [1227-A / 4155-T] to a battery
- Deploy by actioning the switch
- Disconnect the tool [1227-A / 4155-T]

4 - DESTRUCTION OF PYROTECHNIC COMPONENTS ON THE VEHICLE (VEHICLE DESTRUCTION)

WARNING : Use the tool [1227-A / 4155-T] with the adaptor [1227-B] for simultaneous triggering of the pyrotechnic components ; The pyrotechnic elements must be fixed correctly (No spare part must be next to the pyrotechnic elements)

WARNING : Triggering of pyrotechnic elements not fitted in position or incorrectly fixed risks causing damage

ESSENTIAL : Ensure that no-one is in the vicinity of the vehicle when the modules are triggered

WARNING : Check that all of the charges in the vehicle have been detonated before scrapping it

NOTE : If the various pyrotechnic components are not triggered, connect the components to connector of the tool [1227-A / 4155-T]directly

Remove the central console (according to vehicle).

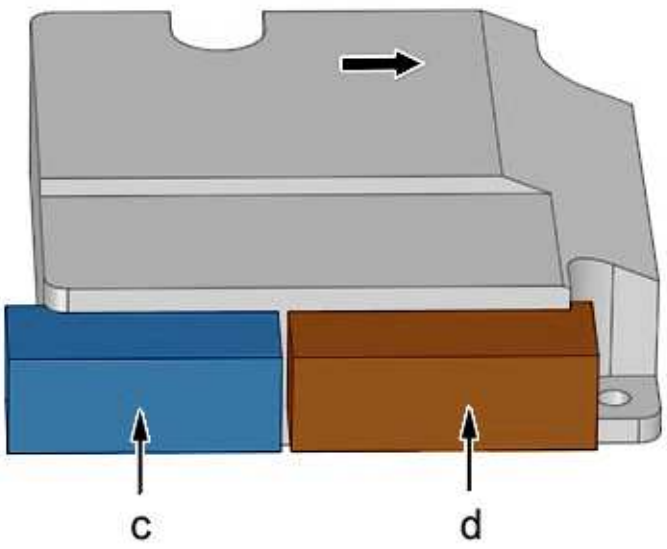

c5jm0c5d

> **WARNING :** Check that the connector is properly locked on the pyrotechnic component prior to any triggering operation

Connect the adaptor [1227-B] and the tool [1227-A / 4155-T] to the central control unit (at "c", "d").

Perform the following operations :

- Use the tool [1227-A / 4155-T] to maintain a safe distance
- Connect the tool [1227-A / 4155-T] to a battery
- Close the accesses (Leave a side window open)
- Deploy by actioning the switch
- Disconnect the tool [1227-A / 4155-T] from the battery
- Disconnect the tool [1227-A / 4155-T] and the adaptor [1227-B]

CHECKING : PRESSURE, ENGINE END OF COMPRESSION

ESSENTIAL : Observe the safety and cleanliness recommendations

1 - TOOLING

Equipment : Compression tester ; Type MULLER 203 102-100.

tool	Reference	Designation
[0194-G] 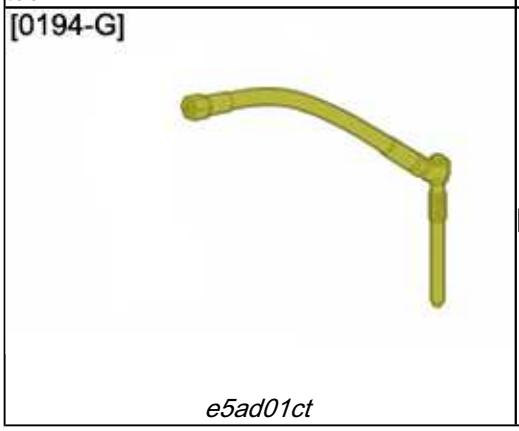 *e5ad01ct*	[0194-G]	Dummy spark plug

2 - PRELIMINARY OPERATIONS

Ensure that the speed of engine rotation, driven by the starter, is correct (Minimal value : 250 rpm).

Check the engine oil level.

Check the condition of the air filter.

3 - REMOVING

ESSENTIAL : Respect the safety and cleanliness recommendations that are specific to high pressure diesel injection (HDi) engines

NOTE : Checking is carried out with the engine cold

Disconnect the ancillaries battery.

Remove the engine style cover (according to equipment).

Remove - Isolate the pre-heat plugs supply wire .

Disconnect the connector of the diesel injectors.

4 - MEASURING THE PRESSURES AT THE END OF COMPRESSION

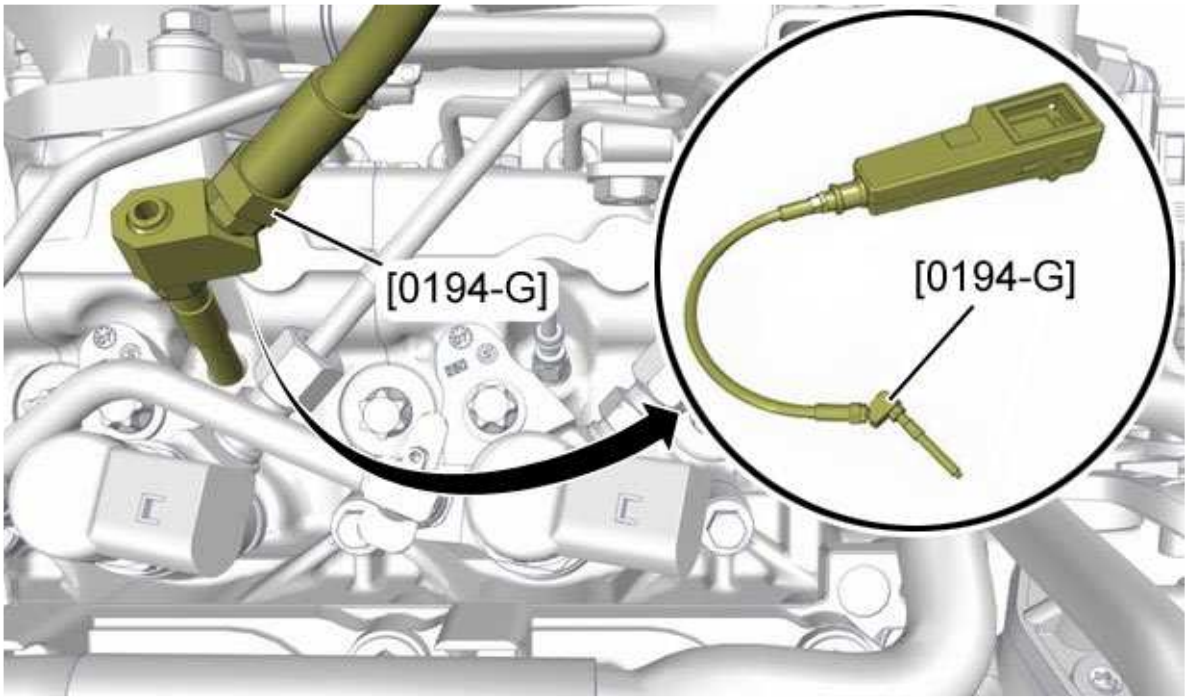

b1bd036d

Remove the glow plugs (cylinder by cylinder).

Position the tool [0194-G] on cylinder no. 1 ; Tighten to 1 daN.m.

Connect the compressiometer to the tool [0194-G].

Reconnect the ancillaries battery.

Operate the starter for 10 seconds.

Note down the value of the pressure in cylinder N° 1.

Apply the same method for cylinders no.2, no.3 and no.4 ; Using tool [0194-G] and the compression tester.

NOTE : The maximum difference between any 2 cylinders should be 5 bars

WARNING : If the pressure values are low, check the condition of the air filter and the head gasket before planning an engine overhaul

5 - REFITTING

WARNING : Adhere to the tightening torques

Remove :

- The compression gauge

- The tool [0194-G]

Connect the connectors of the diesel injectors .

> **WARNING :** Ensure that the glow plugs are in good condition ; Replace any defective parts

Refit :

- The pre-heater plugs
- The supply wire of the glow plugs
- The engine style cover (according to equipment)
- The vehicle to its wheels

> **WARNING :** Perform the operations that are required following a reconnection of the ancillaries battery

Reconnect the ancillaries battery.

Clear the faults in the memory ; Using the diagnostic equipment.

DISMANTLING - RE-ASSEMBLY : ANCILLARY DRIVE BELT

ESSENTIAL : Observe the safety and cleanliness recommendations

1 - TOOLING

tool	Reference	Designation
[01099] 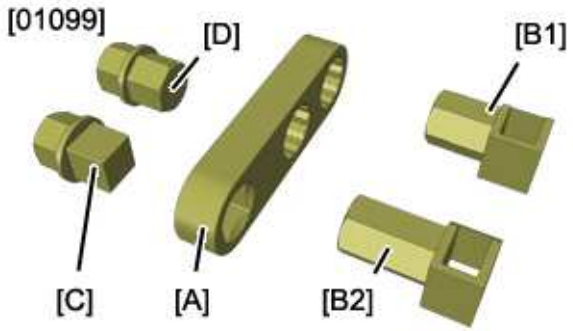 *e5ab1i0t*	[01099]	Accessory drive belt dynamic tensioner roller compression tool
	[01099-A]	Offset adaptor
	[01099-B1]	Dynamic tensioner roller adaptor (8,7 mm)
	[01099-B2]	Dynamic tensioner roller adaptor (10 mm)
	[01099-C]	Double hexagonal end piece
	[01099-D]	Hexagonal adaptor
[0194-E3] 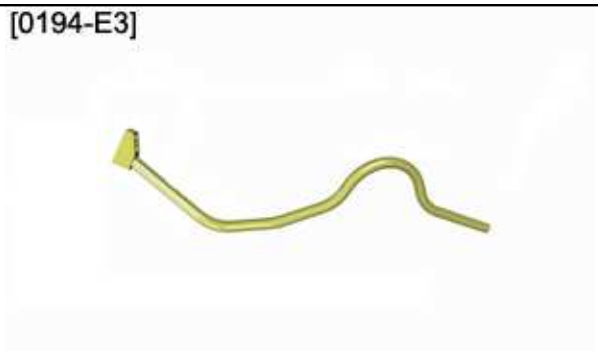 *e5ab09it*	[0194-E3]	Dynamic tensioner compression lever
[0194-F]  *e5ab09kt*	[0194-F]	setting rod for dynamic tensioner roller
	[0188-Z]	Dynamic tensioner roller compression lever

[0188-Z]  *e5ab0g3t*		

2 - LOCATION

2 - 1 - Markings on dynamic roller tensioner

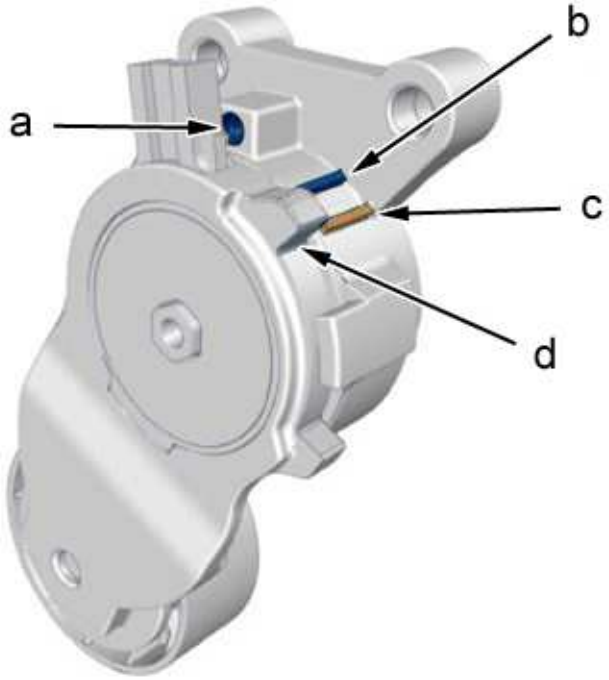

b1bg0wcd

"a" Setting hole.

"b" Maximum elongation mark.

"c" Zero extension mark.

"d" Belt extension checking mark (fixed on engine).

This marking system permits checking of the extension of the ancillary drive belt.

> **NOTE :** The coinciding of the marks "b" and "d" indicates that the ancillary drive belt has to be replaced

2 - 2 - Vehicle without air conditioning

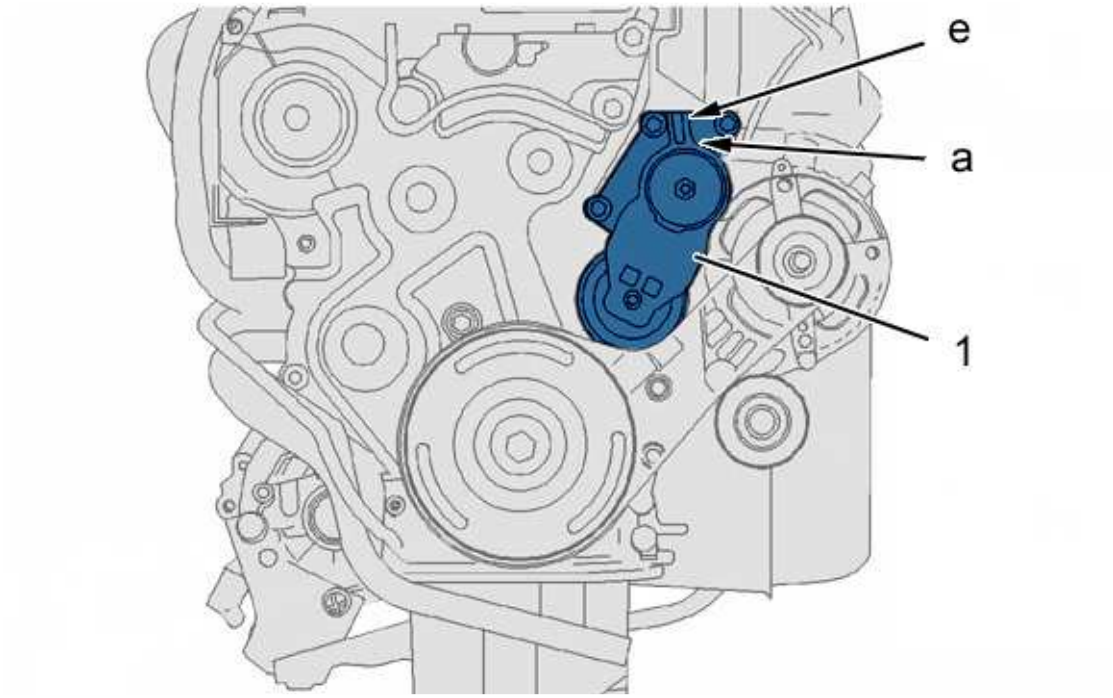

b1bg13od

WARNING : Mark the direction of fitting of the ancillary drive belt if it is to be reused

(1) Dynamic roller tensioner .

"a" Setting hole.

"e" Manoeuvring square.

2 - 3 - Vehicle with air conditioning

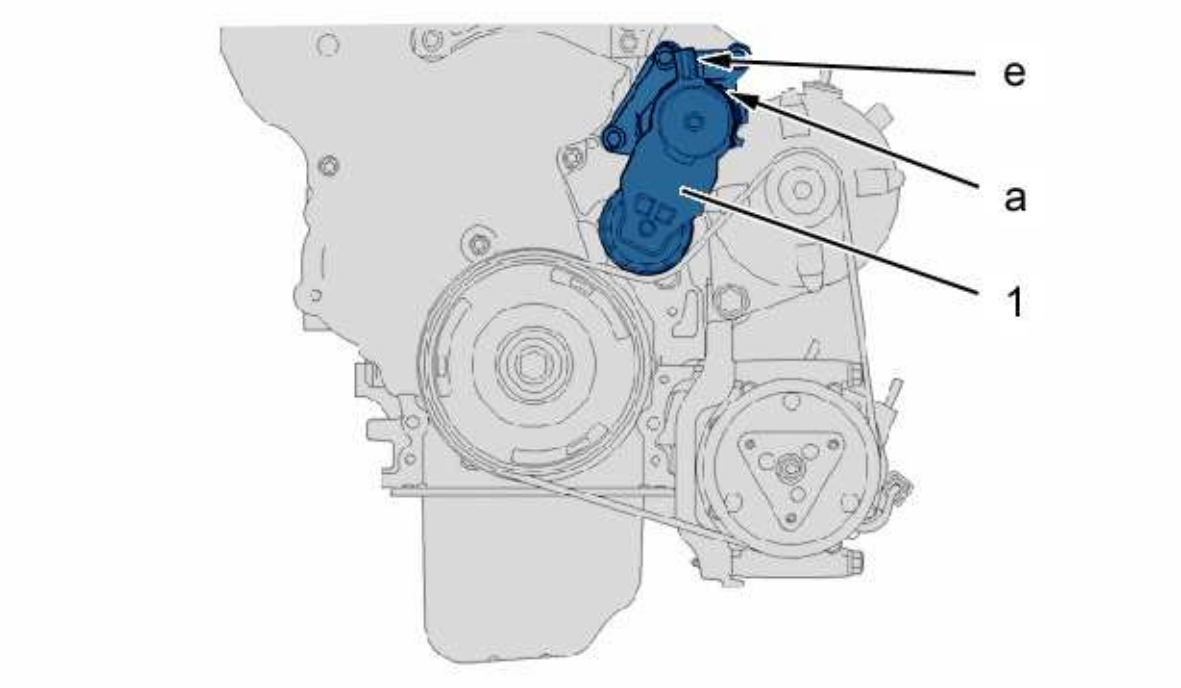

b1bg0wed

WARNING : Mark the direction of fitting of the ancillary drive belt if it is to be reused

(1) Dynamic roller tensioner .

"a" Setting hole.

"e" Manoeuvring square.

3 - REMOVING

Place the vehicle on a two-post ramp.

Remove :

- The protective panel under the engine
- The front right wheel

3 - 1 - Method of use of the tools [01099]

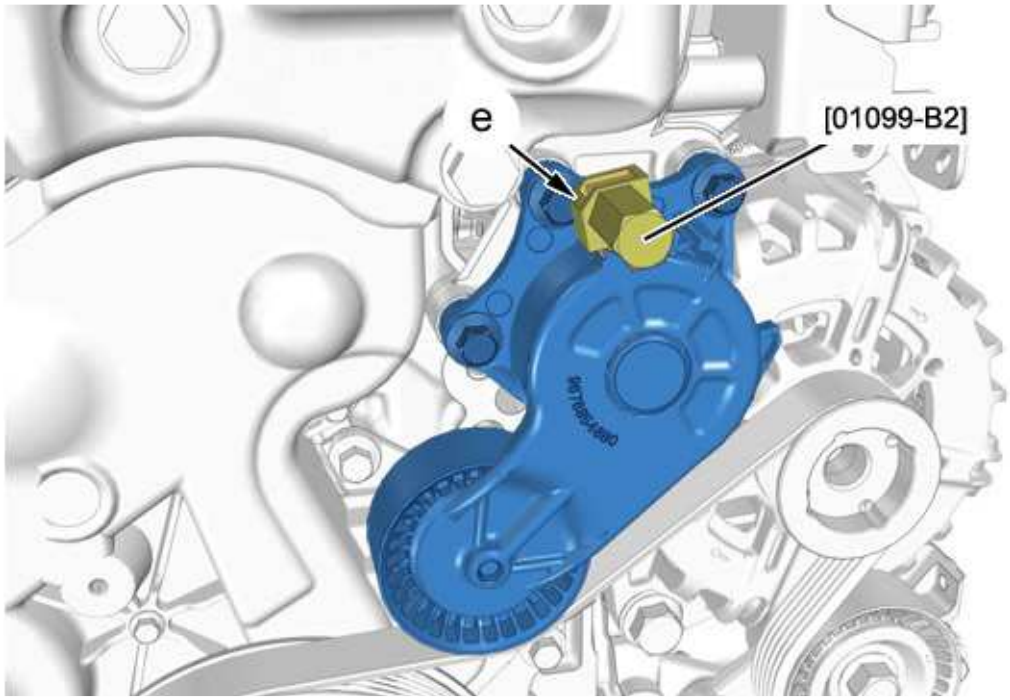

b1bg4h8d

Position the tool [01099-B2] (at "e").

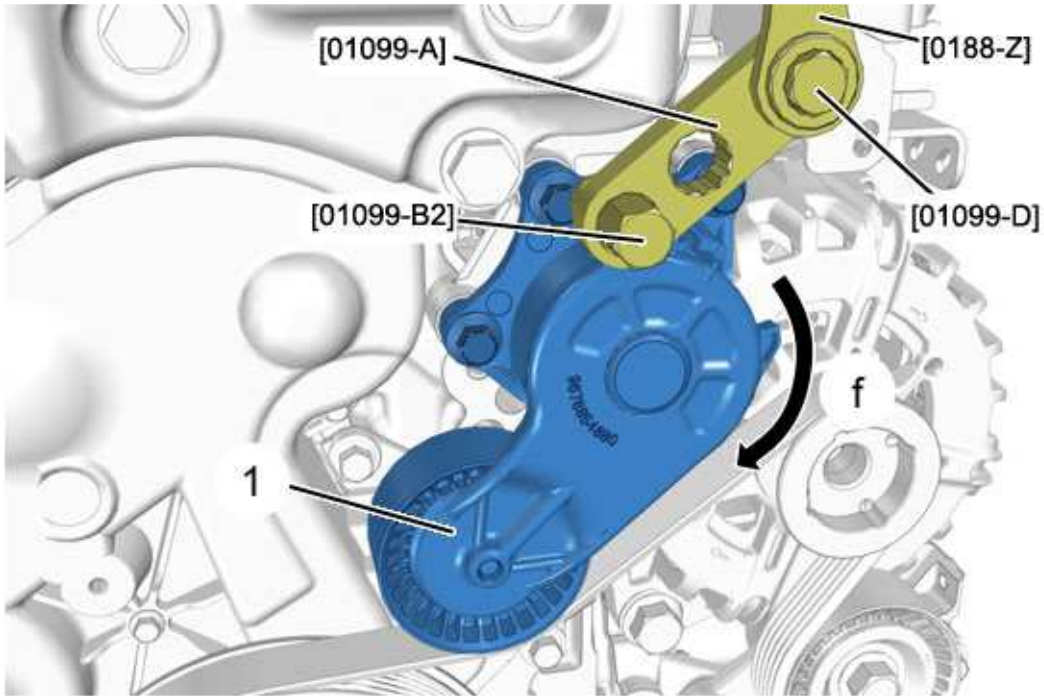

b1bg4myd

Place the tools [01099-A], [01099-D] in place on the tool [01099-B2].

Compress the dynamic tensioner roller (1) clockwise (following the arrow "f") ; Using tool [0188-Z] (The tool [0188-Z] can be replaced with the standard tools).

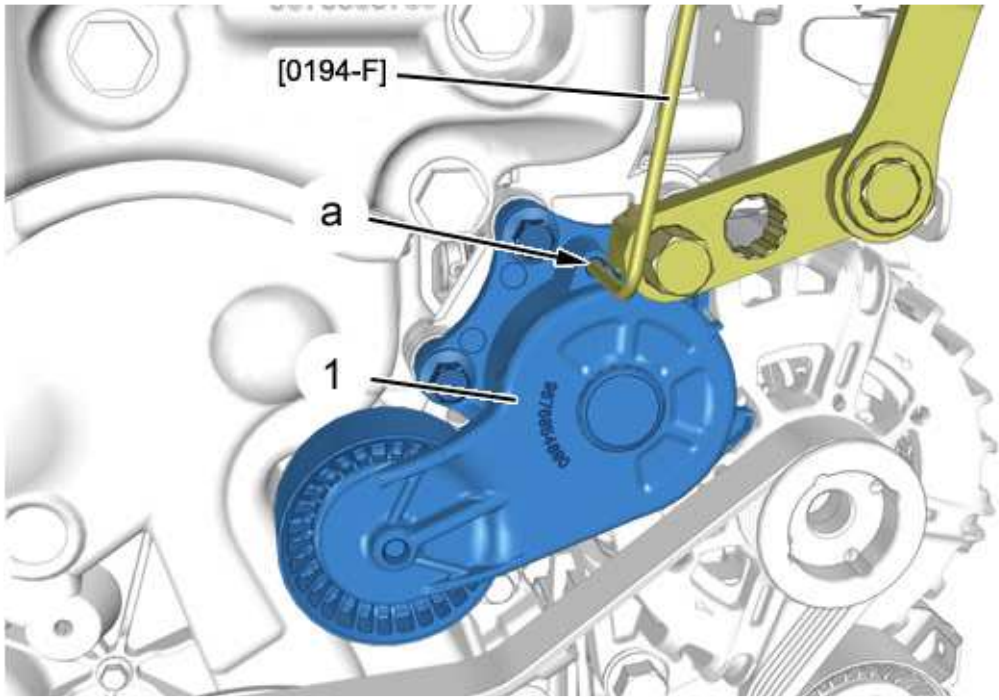

b1bg4h9d

Pin the dynamic tensioner roller (1) ; Using the pin [0194-F] (at "a").

Remove the accessories drive belt .

3 - 2 - Method of use of the tools [0194-E3]

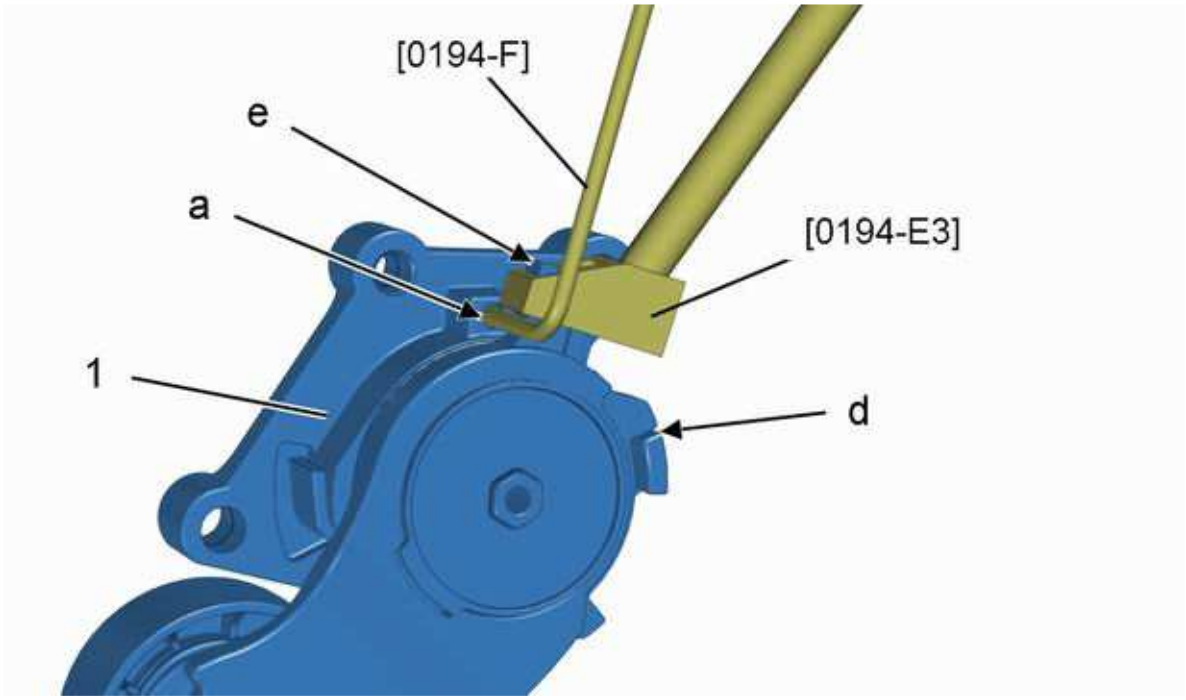

b1bg13nd

Position the tool [0194-E3] (at "e").

Compress the dynamic tensioner roller (1) by pressing at "e" (clockwise) ; Using tool [0194-E3].

Gently bring the belt elongation checking mark "d" to its movement stop.

NOTE : The pin [0194-F] goes underneath the tool [0194-E3] for positioning at "a"

Peg ; Using the pin [0194-F] (at "a").

4 - REFITTING

WARNING : Re-used belt : Observe the fitting direction of the belt

Refit the ancillary belt .

WARNING : Ensure that the accessories drive belt is correctly positioned in the grooves of the various pulleys

Compress the dynamic tensioner roller (1) (clockwise) ; Using the tool [[0194-E3]] or [[01099], [0188-Z]].

Remove the tool [0194-F].

Slacken the ancillary drive belt dynamic tensioner roller .

Remove the tool [0194-E3] or [01099], [0188-Z].

Refit :

- The front right wheel
- The protective panel under the engine

WARNING : Perform the operations that are required following a reconnection of the ancillaries battery

Reconnect the ancillaries battery.

DISMANTLING - RE-ASSEMBLY : ENGINE AND GEARBOX ASSEMBLY

ESSENTIAL : Ensure that the precautions relating to safety and cleanliness are adhered to

1 - TOOLING

Tool	Reference	Description
[0004]  *e5ab05kt*	[0004]	Lifting table
[0194-T]  *e5ab05lt*	[0194-T]	Set of plugs
[0005]  *e5ab0ejt*	[0005]	Set of power train retaining supports
	[0005-G]	Set of engine-gearbox assembly retaining supports
	[0005-C]	Set of engine-gearbox assembly retaining supports
	[0165-2]	Pliers for removing and refitting the

[0165-2]  *e5ab0gvt*		spring clips
[0216-G1] 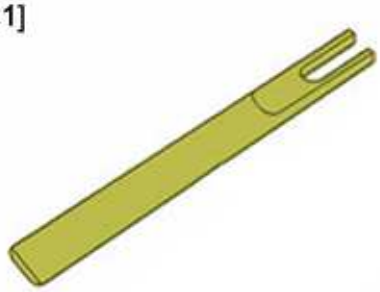 *e5ab0btt*	[0165-2]	Tool for detaching ball-joints Ø 10 mm

2 - REMOVING

> **ESSENTIAL :** **Respect the safety and cleanliness recommendations that are specific to high pressure diesel injection (HDi) engines**

Put the vehicle on a two-post left.

Strap the vehicle on the ramp.

Disconnect the ancillaries battery.

Drain :

- **The cooling system**
- **The gearbox**
- The air conditioning system

Remove :

- The engine cover
- The front wheels
- **The front driveshafts**
- Front splash shields
- The protective plate under the engine
- The spoiler under the bumper



b1bg3g4d

WARNING : Plug the openings of the air intake circuit

Remove :

- The ancillaries battery (2)
- The battery tray
- The engine management ECU (1)
- The air duct (3)
- The air hoses (4)

WARNING : Blank all of the fuel circuit openings which are open

Uncouple and move aside the fuel supply and return pipes(At " a ") ; Plug by means of the tool [0194-T].

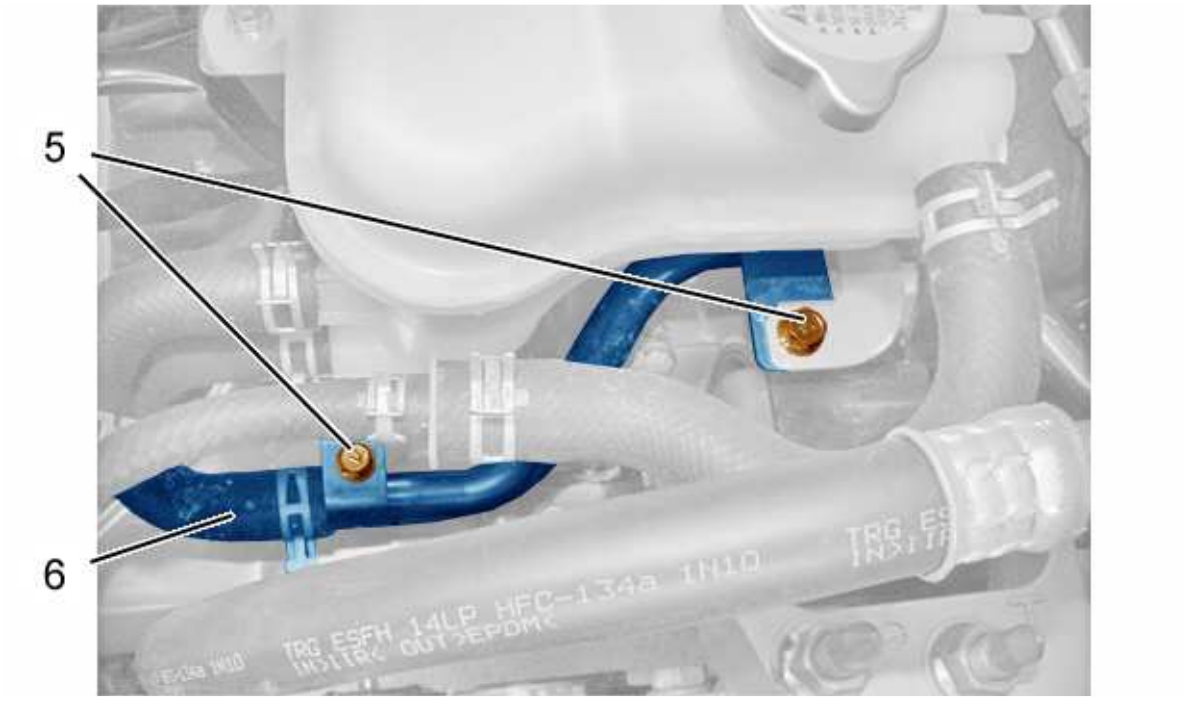

b1bg3g5d

Remove the 2 bolts (5).

Uncouple and move aside the hose (6).

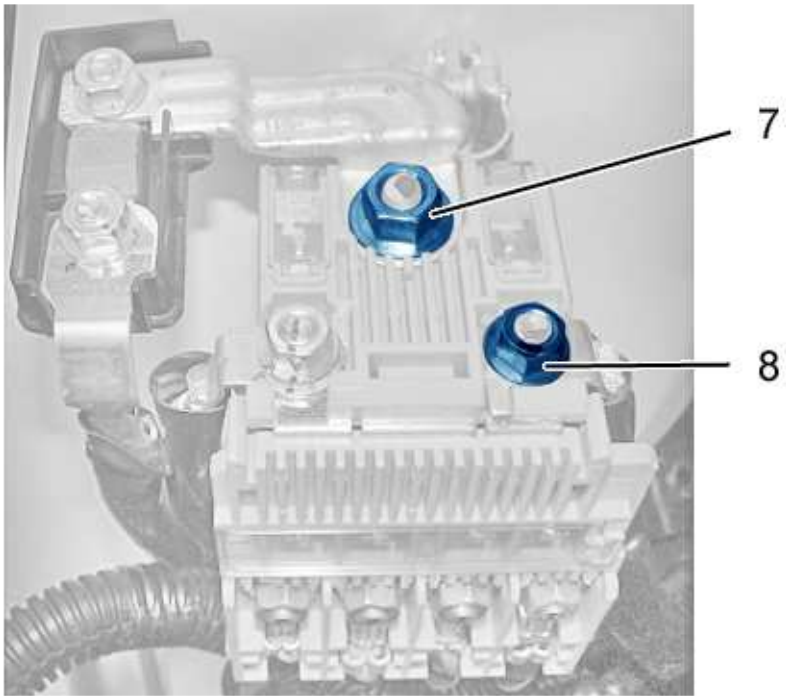

b1bg3g6d

On the positive terminal of the battery :

- Remove the nut (7)

- Remove the nut (8)
- Move aside the electrical harnesses

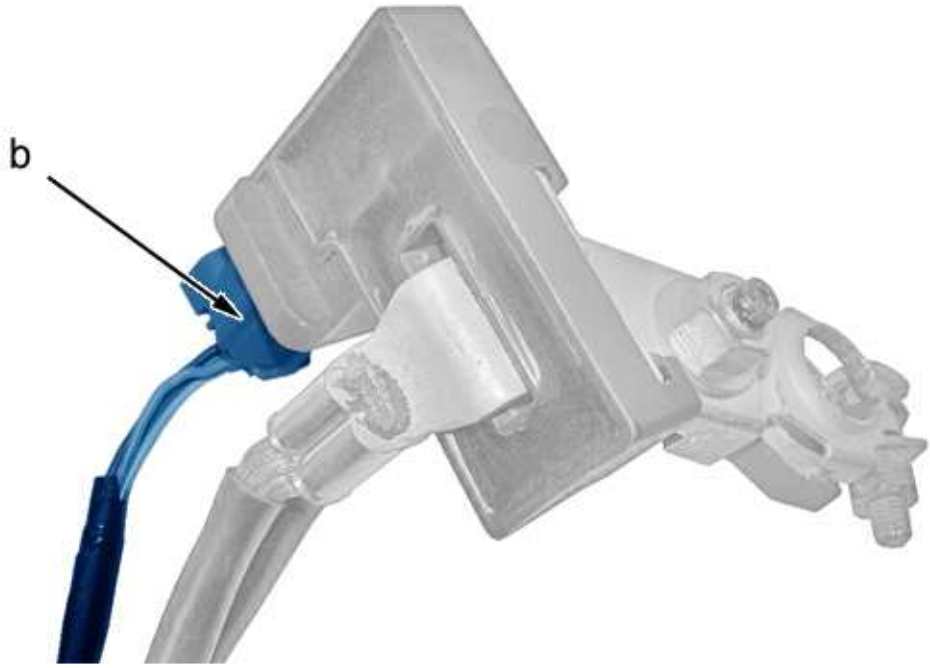

b1bg3g7d

Disconnect the connector on the battery charge status control unit (at "b").

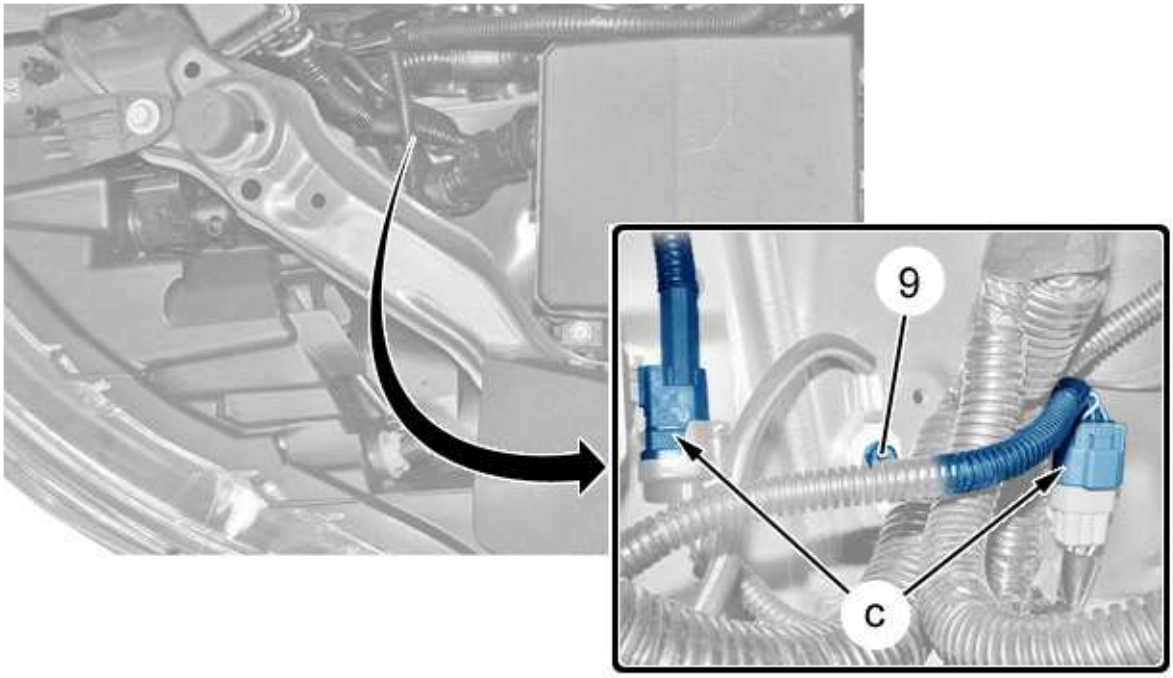

b1bg3i6d

Disconnect the connectors (at "c").

Remove the bolt (9).

Unclip and move aside : The electrical harnesses.

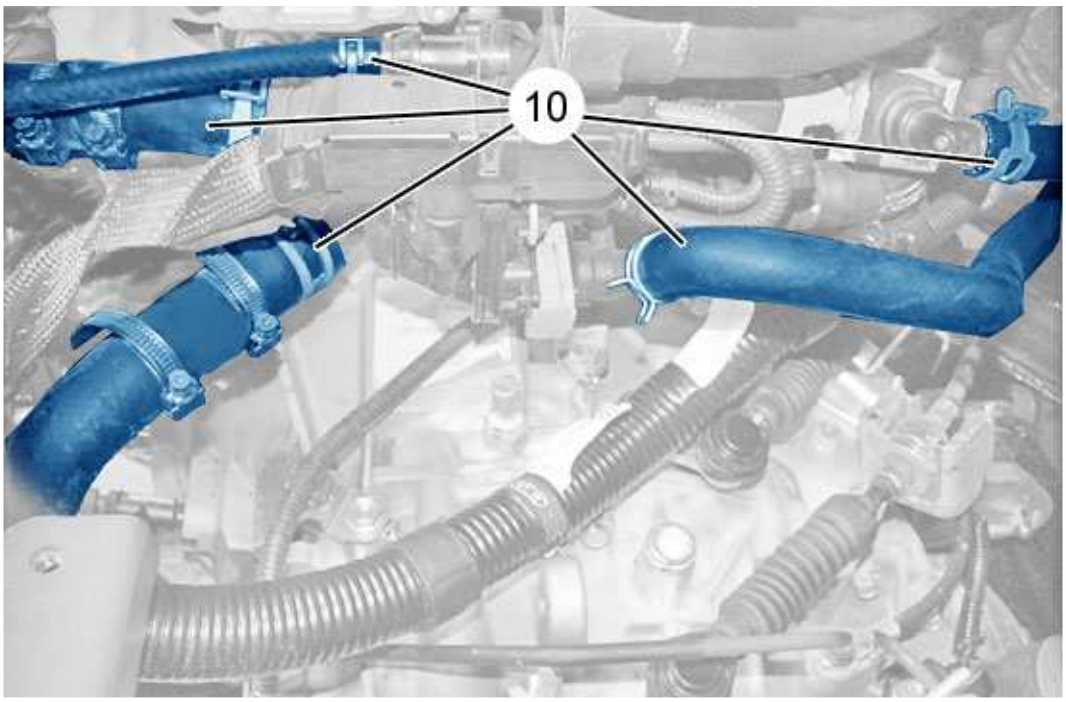

b1bg3g9d

Disconnect the 5 pipes (10) ; Using tool [0165-2].

Uncouple the vacuum pipe from the vacuum pump.

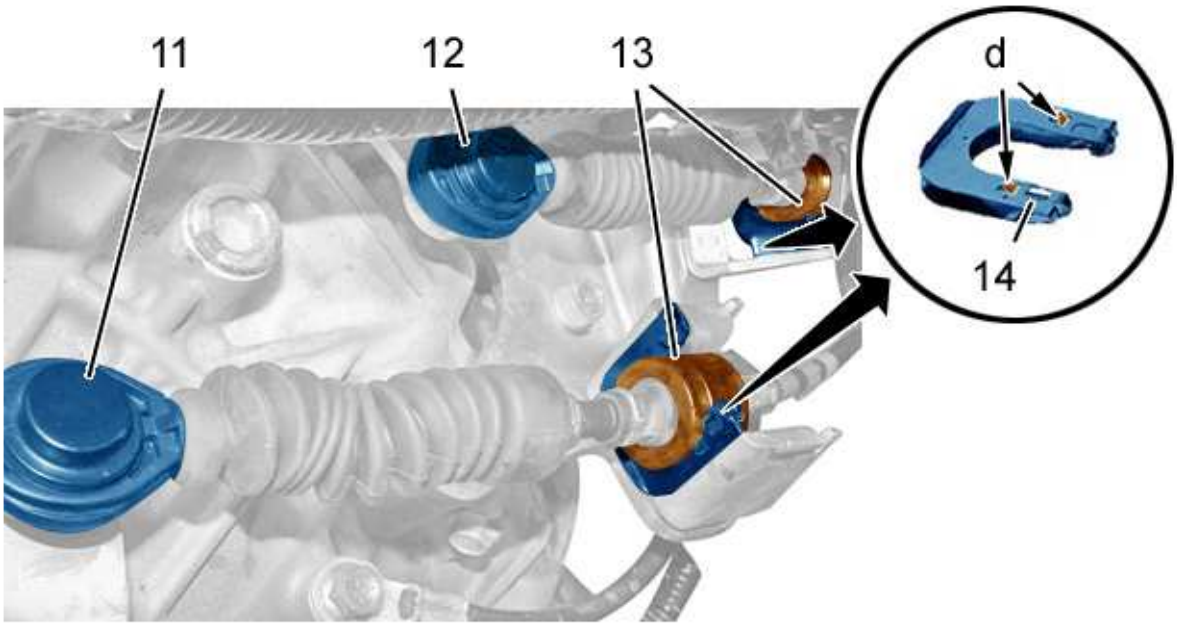

b1bg3gad

Uncouple :

- The ball joint (11) ; Using tool [0216-G1]
- The ball joint (12) ; Using tool [0216-G1]

Release the sleeve stops (13) from the support .

Push on the 2 fasteners behind the clips (14) ; Using a small, flat, thin screwdriver (at "d").

Pull upwards to uncouple the sleeve stops from their support.

Move aside the gear control cables.

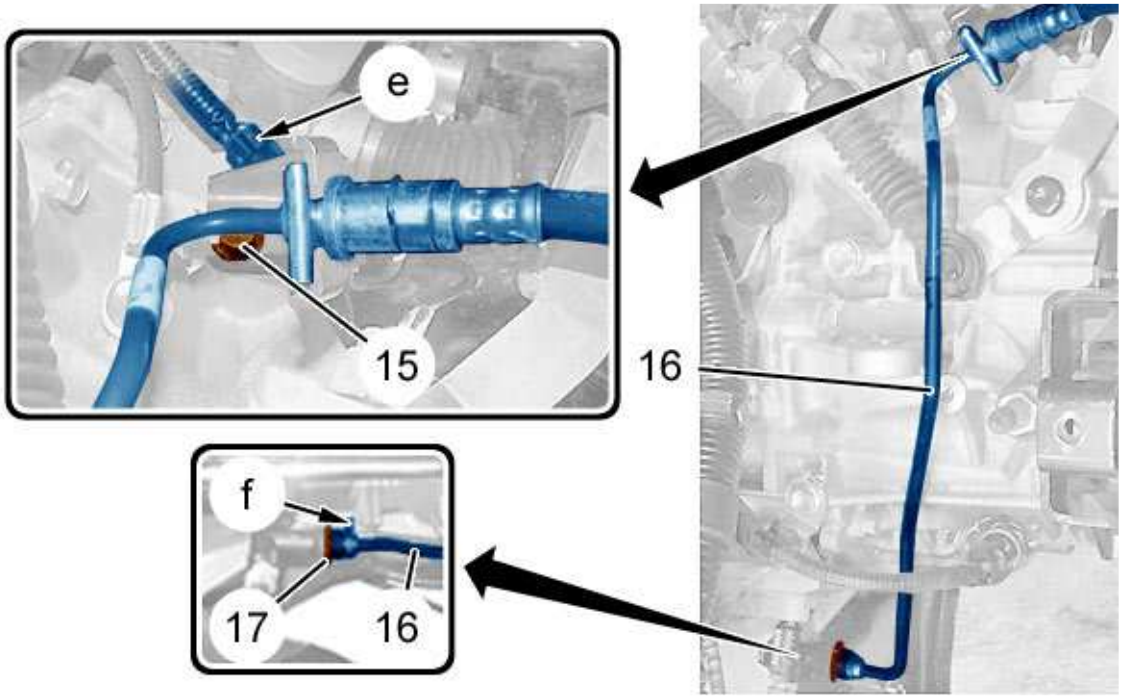

b1bg3gbd

Remove :

- The (15) bolt
- The clip (17)

Unclip the connector (at "e").

Be prepared for the brake fluid flowing out of the hydraulic pipe (16).

Uncouple the hydraulic pipe (16) (at "f").

Move aside the hydraulic pipe (16).

Plug the hydraulic pipe (16) ; Using tool [0189-Q].

Remove :

- The air-conditioning compressor
- The subframe

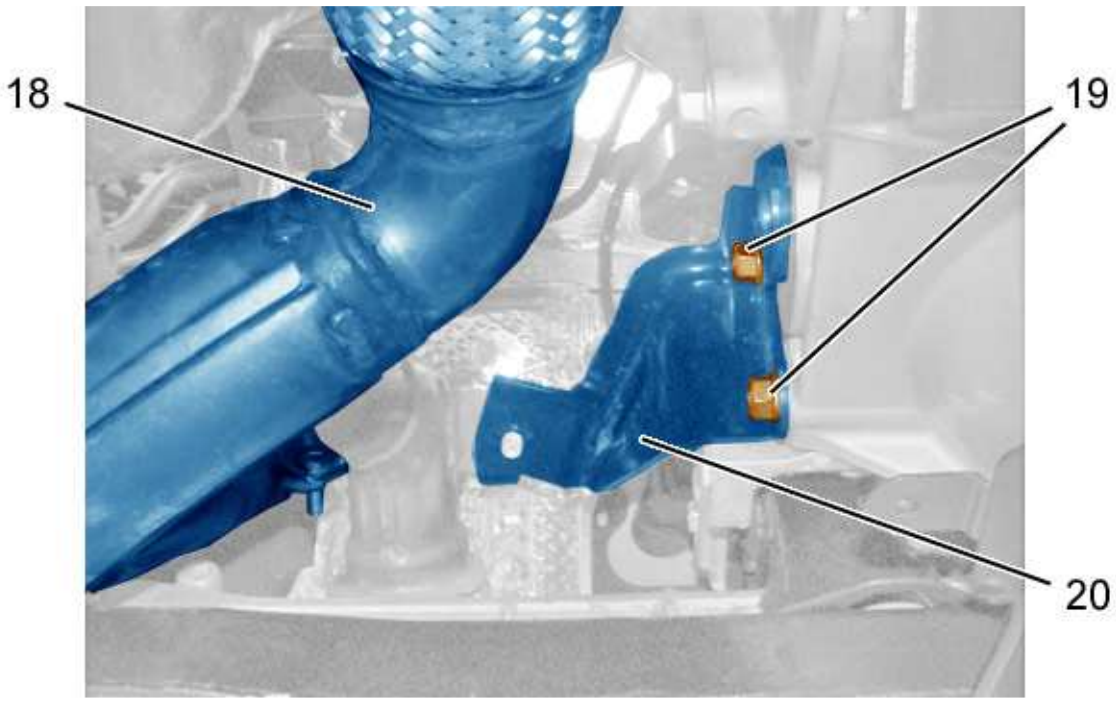

b1bg3gcd

Remove :

- The bolts (19)
- Front exhaust pipe (18)
- The exhaust support (20)

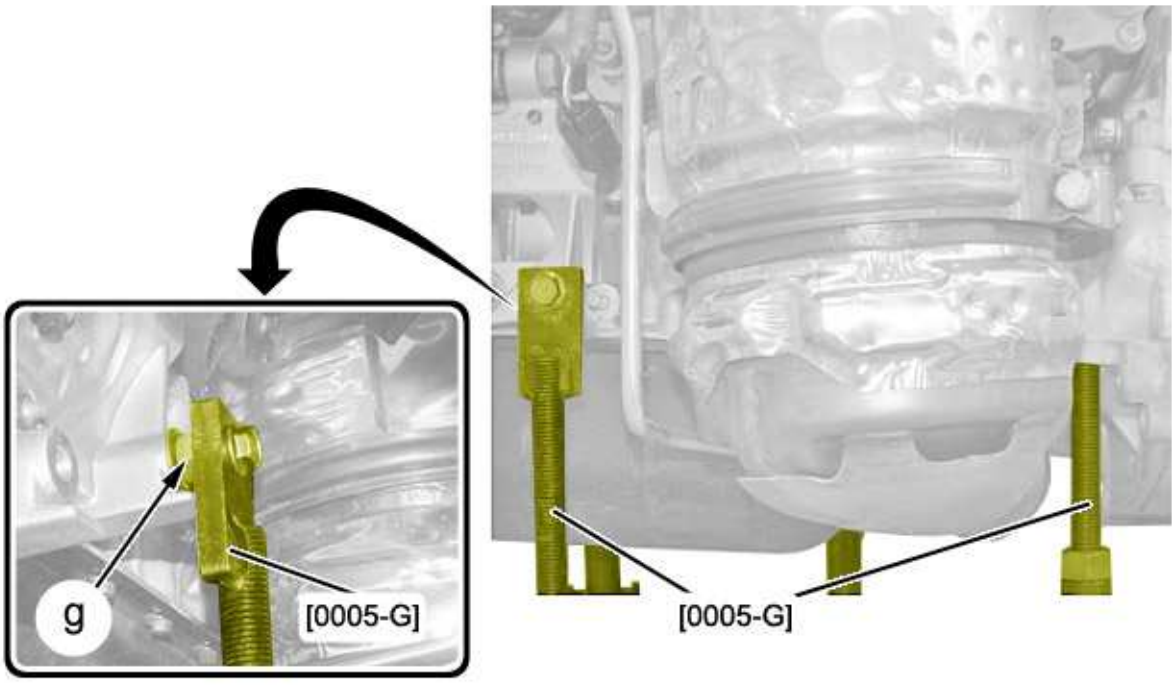

b1bg3gdd

Fit a shim (at "g").

Install the lifting table [0004] with the brackets [0005-G] under the power train.

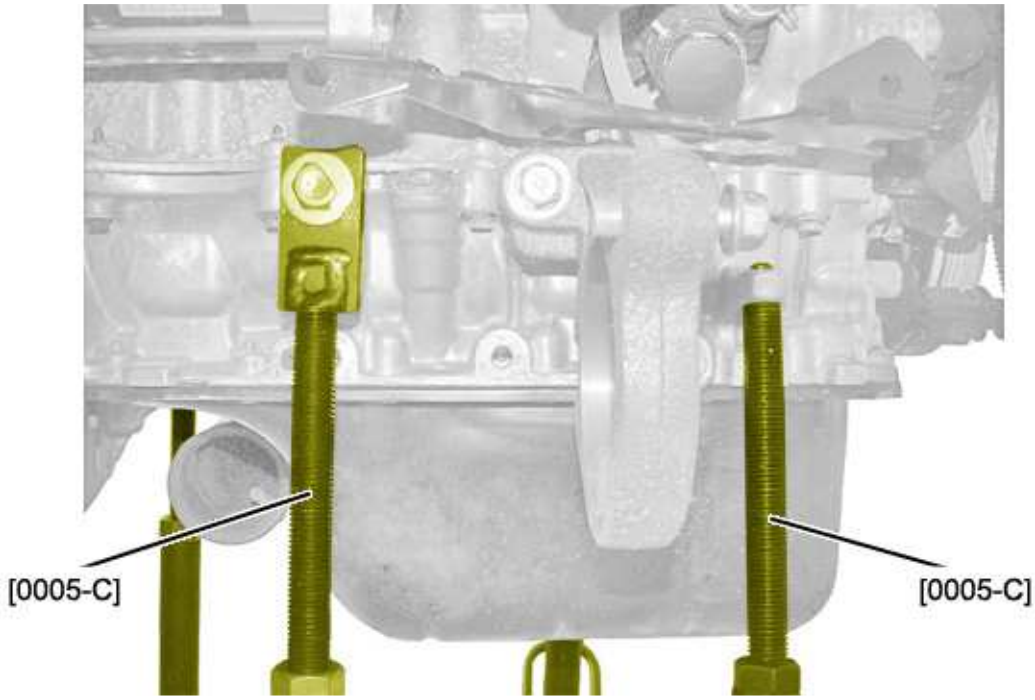

b1bg3ged

Install the lifting table [0004] with the brackets [0005-G], [0005-C] under the power train.

Tighten all the fixings of the supports [0004], [0005-G], [0005-C].

Slightly raise the power train with the lifting table [0004].

On the floor mark the location of the lifting table [0004].

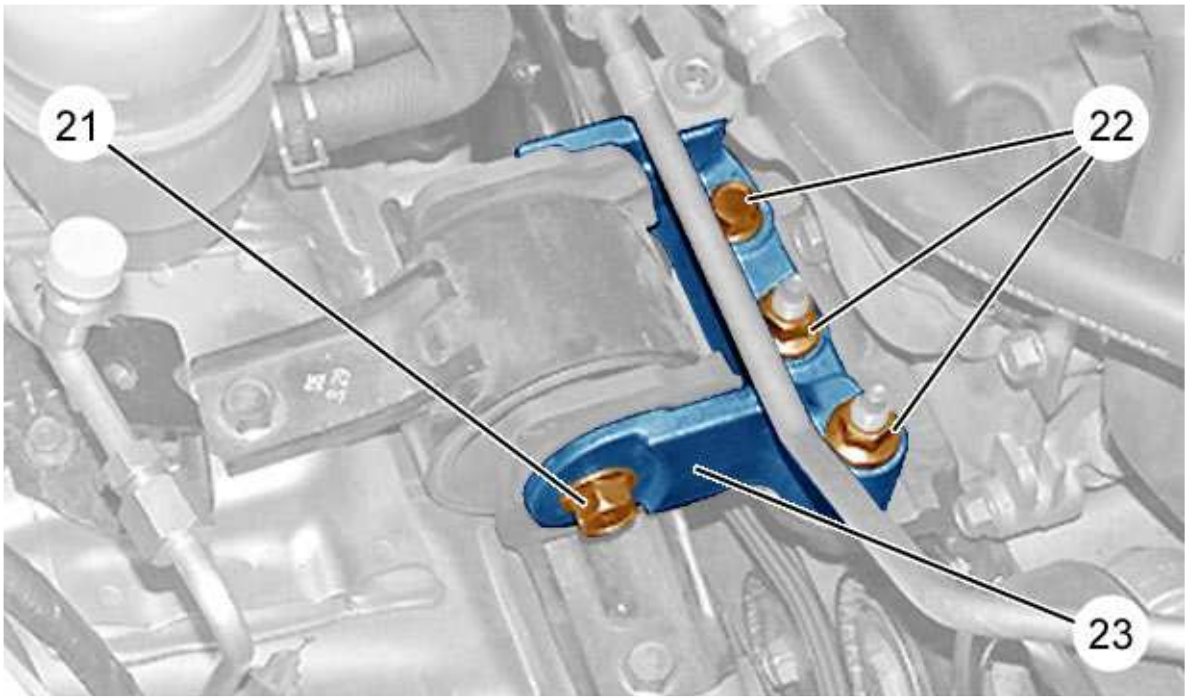

b1bg3ggd

Remove :

- The mountings (22)
- The (21) bolt
- The engine mounting (23)

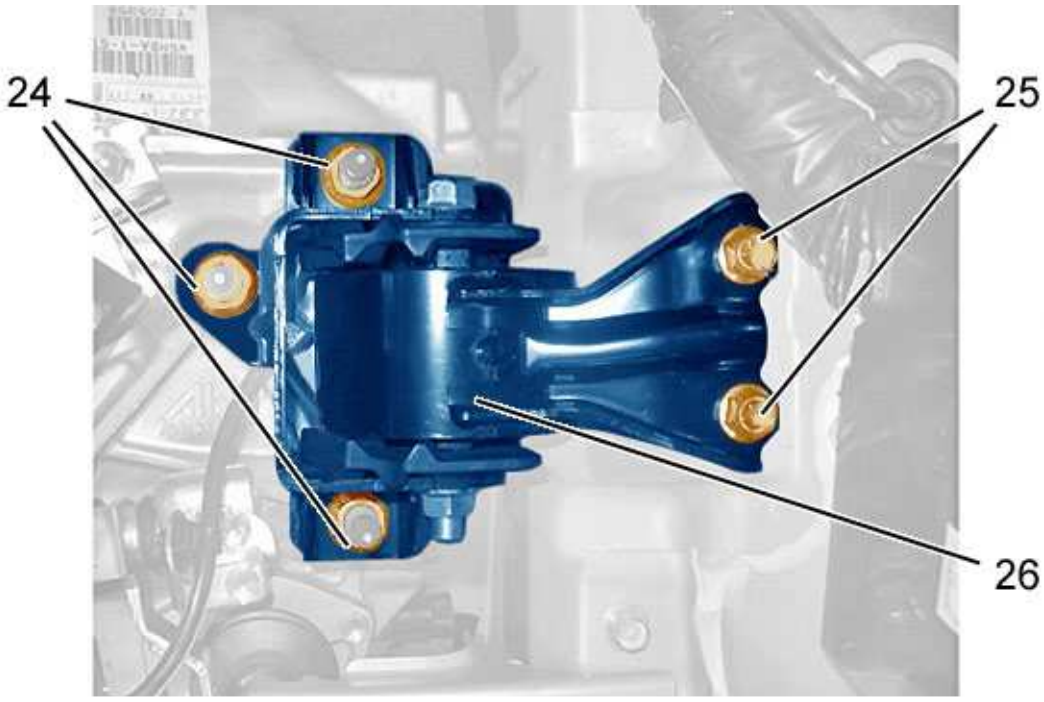

b1bg3ghd

Remove :

- The 2 bolts (25)
- The 3 nuts (24)
- The right-hand engine mounting (26)

> **WARNING :** Ensure that there is no interference between the engine-gearbox assembly and the body

Lower the power unit assembly.

3 - REFITTING

> **WARNING :** When refitting, all the seals that have been removed must be replaced with new seals

> **WARNING :** Ensure that there is no interference between the engine-gearbox assembly and the body

> **WARNING :** Adhere to the tightening torques

SPECIAL FEATURE :

FOR : 1CMJ - B0FLT : DIESEL DV6C UE6 85KW

FOR : 1CMJ - B0FBM : DV6C TURBO DIESEL

Tightening torque :

- Engine
- Engine/gearbox mountings
- Exhaust system
- Front suspension
- Driveshafts
- Road wheels

Position the lifting table [0004] with the engine-gearbox assembly at the marks made on removal.

Position the engine-gearbox set.

Refit :

- The right-hand engine mounting (26)
- The 3 nuts (24)
- The 2 bolts (25)
- The engine mounting (23)
- The (21) bolt
- The mountings (22)

Withdraw the lifting bench [0004] from under the vehicle.

Remove the tools [0005].

Refit :

- The exhaust support (20)
- **Front exhaust pipe (18)**
- The bolts (19)
- **The subframe**
- **The air-conditioning compressor**

Remove the tools [0189-Q].

Replace the pipe ((16)).

Couple the hydraulic pipe (16) (at "f").

Clip :

- The hydraulic pipe (16) (at "f")
- The connector (at "e")

Refit :

- The clip (17)
- The (15) bolt

Recouple :

- The ball joint (11) ; Using tool [0216-G1]
- The ball joint (12) ; Using tool [0216-G1]
- The vacuum pump vacuum pipe
- The 5 hoses (10)

Connect the connectors (at "b", "c").

Refit the nut (9).

Clip : The electrical harnesses.

On the positive terminal of the battery :

- Refit the nut (7)
- Refit the nut (8)
- Refit the electrical harnesses

Connect the hose (6).

Refit the 2 bolts (5).

Connect the fuel supply and return pipes (at "a").

Refit :

- The air hoses (4)
- The air duct (3)
- **The engine management ECU (1)**
- The battery tray
- **The ancillaries battery (2)**
- The spoiler under the bumper
- The protective plate under the engine
- Front splash shields
- **The front driveshafts**
- The front wheels
- The engine cover

Vacuum drain the air conditioning system (for a maximum of 35 minutes) ; Using the charging station .

Charge the air conditioning circuit.

Fill the gearbox to the correct level.

Fill, bleed and top up the level of the cooling circuit.

> **WARNING :** Perform the operations that are necessary after a battery reconnection

Reconnect the ancillaries battery.

4 - CHECKS

Read the fault codes ; Using the diagnostic tool.

Start the vehicle.

Check :

- There is no noise
- The circuits are free from leaks

Stop the engine.

Carry out :

- A road test
- A reading of the auto-diagnostic memories

DRAINING - FILLING - BLEEDING : COOLING SYSTEM

ESSENTIAL : Observe the safety and cleanliness recommendations

WARNING : Use the approved coolant only "Super Long Life Coolant L255"

Equipment : Equipment for filling by vacuum.

1 - PRELIMINARY OPERATIONS

ESSENTIAL : Do not operate on the engine when it is hot ; Risk of burns

Put the vehicle on a hoist.

Disconnect the ancillaries battery.

Remove : The front bumper deflector.

2 - DRAIN AND REFILL

Remove the plug from the header tank .

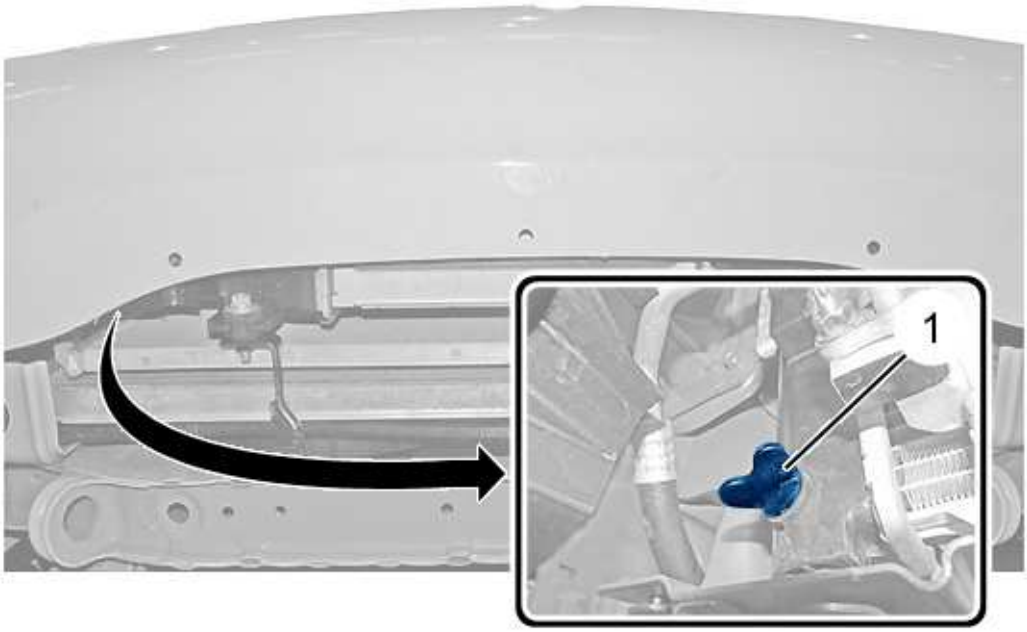

b1gi07vd

NOTE : Place a tray under the radiator to drain the circuit cleanly

Remove the radiator drain plug (1).

Remove : The engine rear acoustic shield.

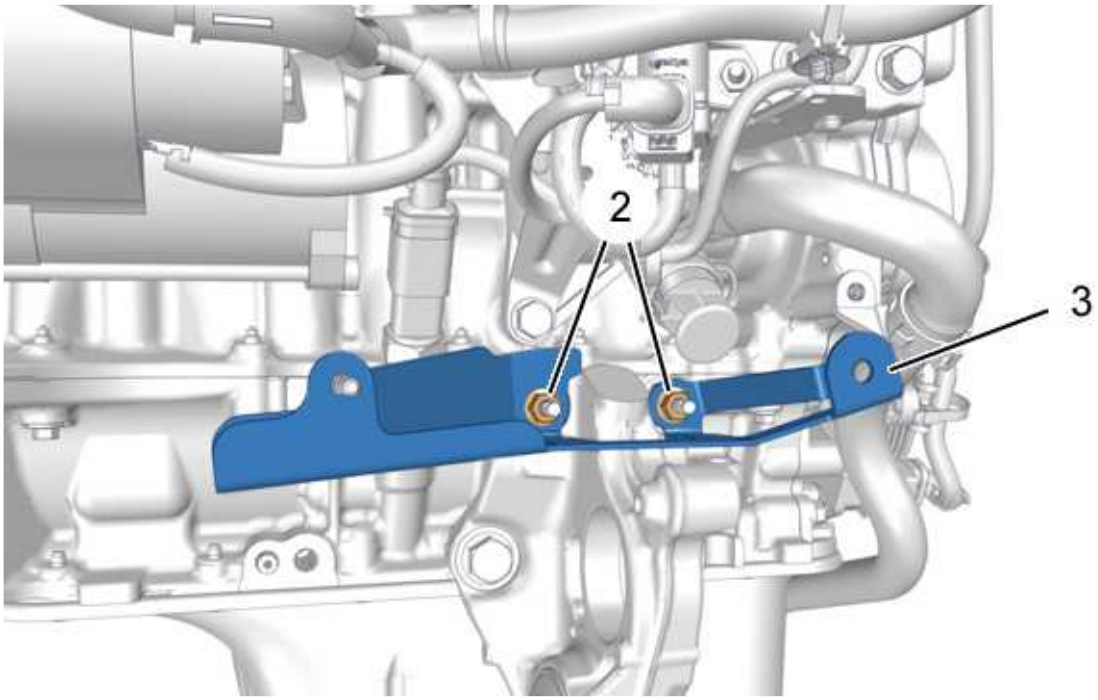

b1gi08nd

Remove :

- The nuts (2)
- The bracket (3)

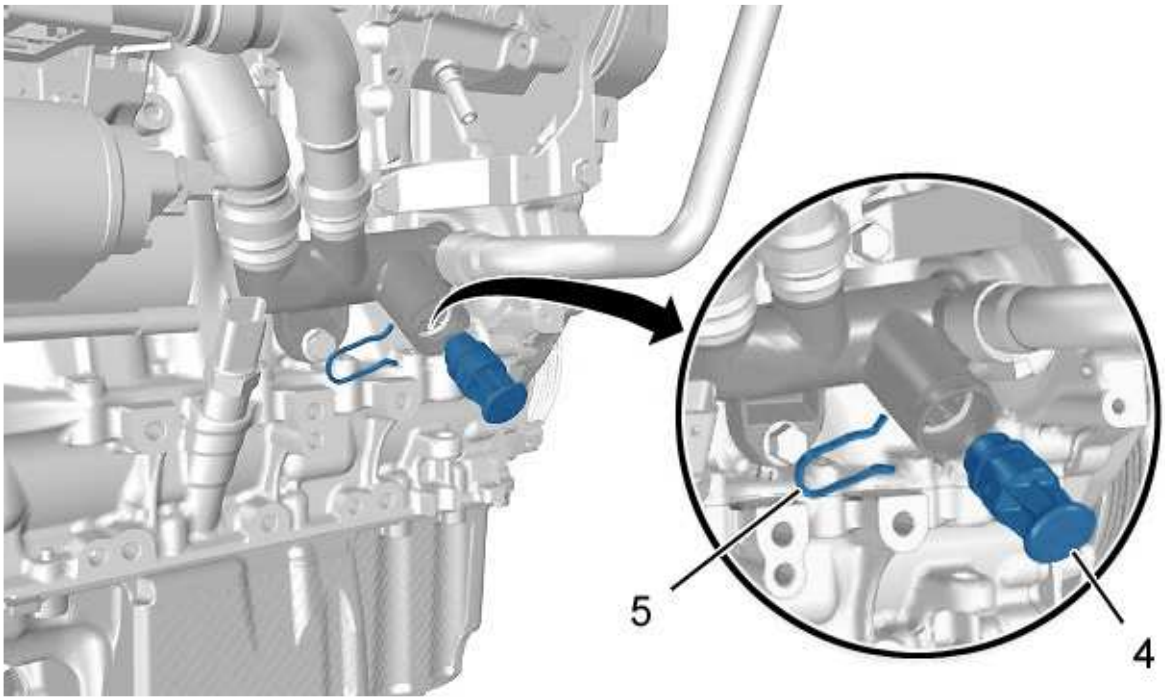

b1gi08od

Remove the clip (5).

Drain the cylinder block, removing plug (4).

Allow the liquid to flow out.

3 - REFILLING



b1gi07xd

> **WARNING :** Always replace the seal (6)

Refit :

- The clip (5)
- The cap (4)
- The bracket (3)
- The nuts (2)
- The engine rear acoustic shield
- The radiator drain plug (1)

> **WARNING :** Before filling, flush the cooling system with clean water

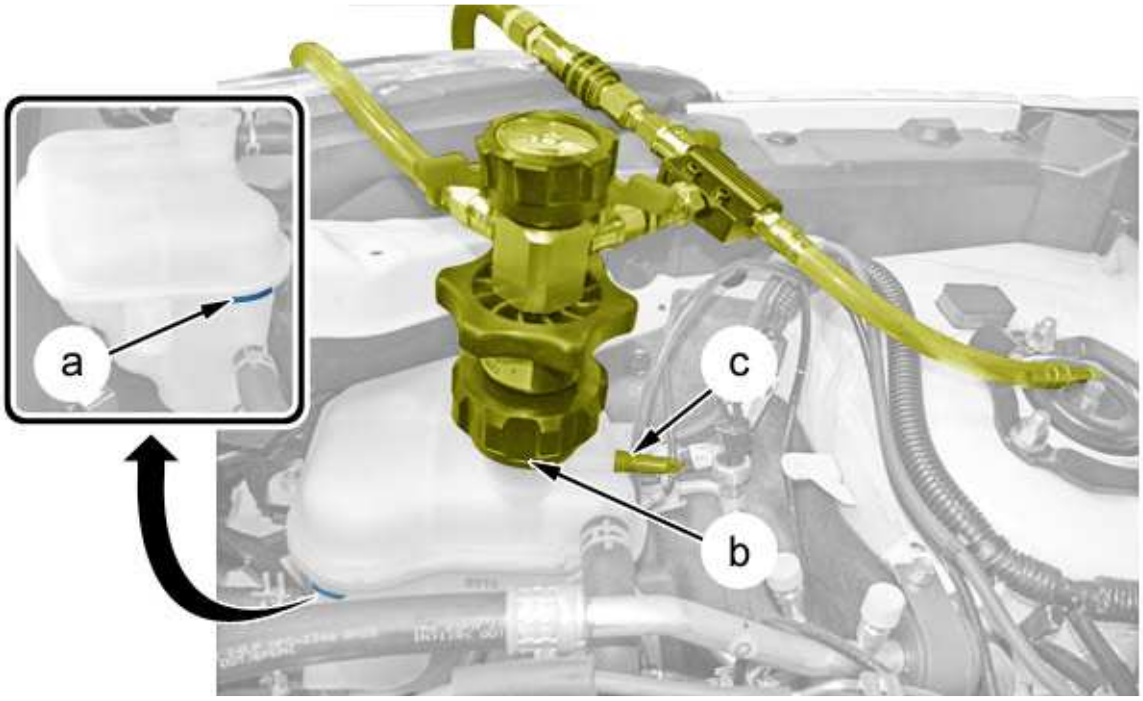

b1gi07yd

Position : The vacuum filling equipment (at "b").

Put in place a seal plug (at "c").

Create a vacuum in the cooling system ; Check the sealing of the circuit.

Fill the cooling system ; By means of the vacuum filling equipment.

NOTE : Refer to the relevant documentation

Remove : The vacuum filling equipment.

Remove the sealing cap (at "c").

Top up the coolant level (To the max level) (at "a").

Close the expansion chamber cap.

WARNING : Perform the operations to be carried out following reconnection of the battery

Reconnect the ancillaries battery.

4 - CHECK

WARNING : The level must be to the "maximum" mark on the expansion chamber (at "a")

WARNING : The air conditioning control should not operate during this phase

Start the engine.

Keep the engine speed at 2500 rpm, up to the second cooling cycle (cooling fan(s) cutting in and out).

Stop the engine and wait for it to cool down.

Open the expansion chamber cap (Carefully).

If necessary top the level up to the maximum mark (engine cold).

Close the expansion chamber cap.

Check the absence of leaks.

Refit : **The front bumper deflector**.

DISMANTLING - RE-ASSEMBLY : FRONT BUMPER DEFLECTOR

ESSENTIAL : Observe the safety and cleanliness recommendations

1 - TOOLING

tool	Reference	Designation
[1350-ZZ] 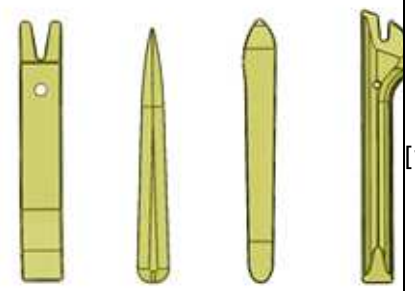 *e5ag02mt*	[1350-ZZ]	Stripping tools

2 - REMOVING

Place the vehicle on a 2-post lift.

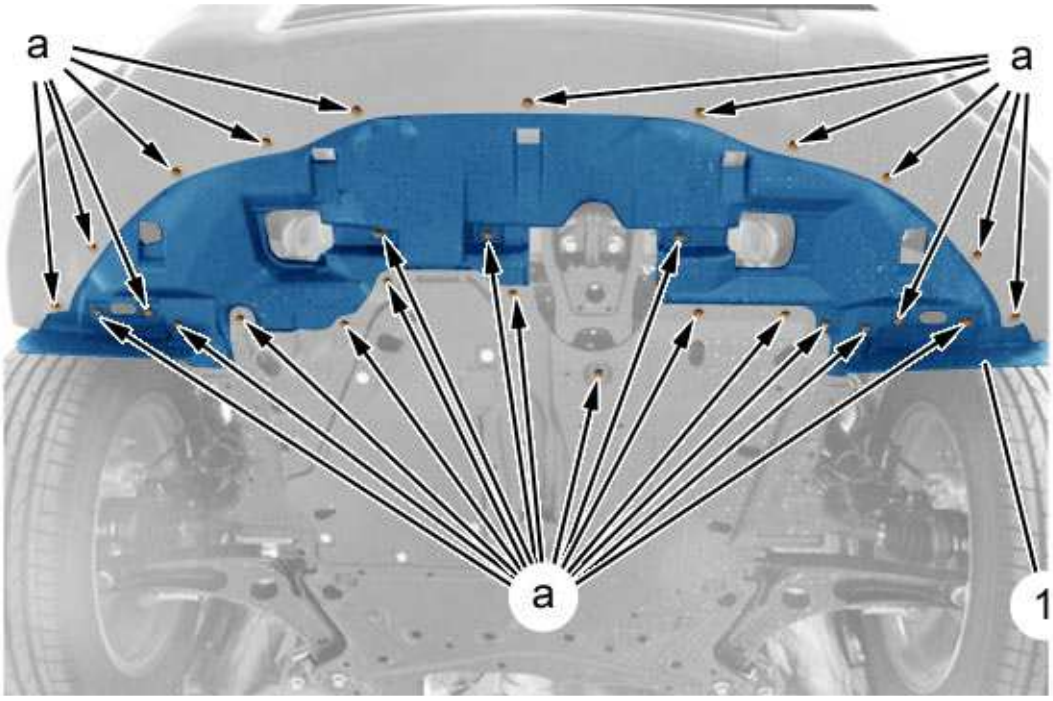

c5jg0z8d

Remove the clips (at "a") ; Using tool [1350-ZZ].

Detach the front bumper deflector (1).

Remove the front bumper deflector (1).

3 - REFITTING

Proceed in the reverse order to removal.

Check all the equipment works.

DRAIN - REFILL : GEARBOX

ESSENTIAL : Observe the safety and cleanliness recommendations

1 - TOOLING

Type manual oil syringe FACOM 376.

Drain tray.

2 - DRAIN AND REFILL

Remove : The protective panel under the engine .

Place a container underneath the vehicle to drain the circuit with no mess.

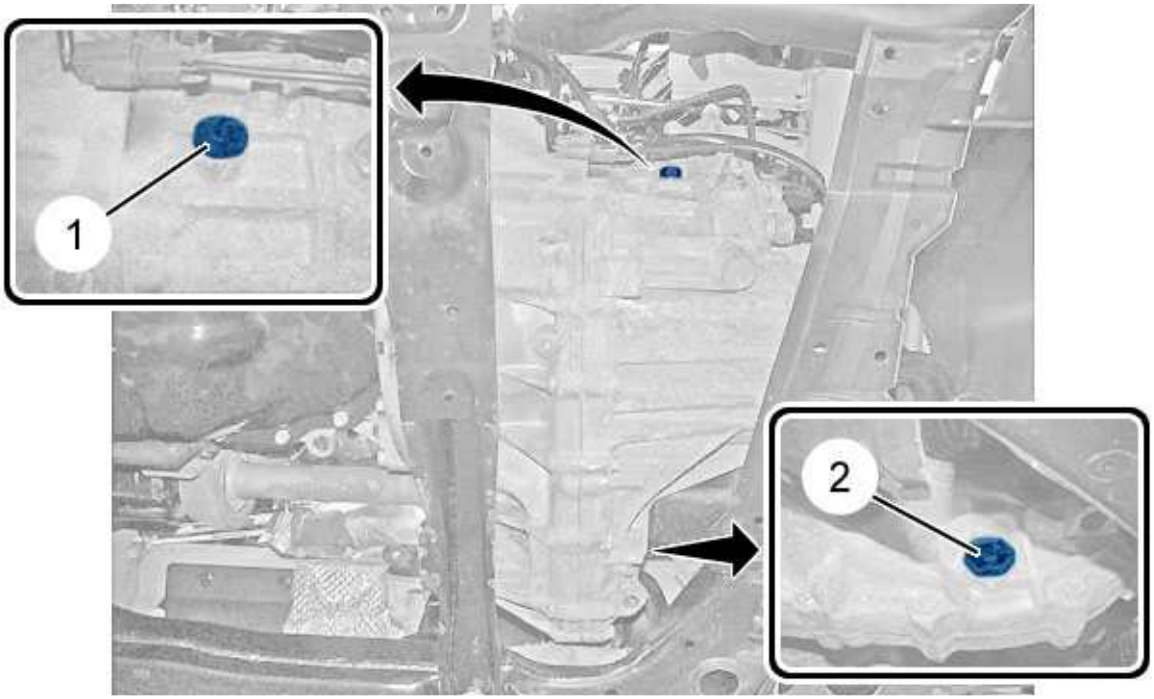

b2ci00nd

Remove :

- The filler cap (1)
- The drain cap (2)

Allow oil to flow out.

3 - OIL QUALITY

Use only oil recommended in the Specifications Identification section.

4 - REFILLING

WARNING : Adhere to the tightening torques

WARNING : Replace the seal on the drain plug (2)

WARNING : Replace the seal on the filler cap (1)

WARNING : Put in the exact quantity of oil

Engine flywheel retaining pin (2) With a new seal .

Fill or top up ; Using a FACOM 376 type manual oil syringe.

NOTE : Fill the gearbox with oil up to the lower edge of the aperture of the filler cap (1)

Refit :

- The filler cap (1) (With a new seal)
- The protective panel under the engine

DISMANTLING - RE-ASSEMBLY : UNDER ENGINE PROTECTION

ESSENTIAL : Observe the safety and cleanliness recommendations

1 - TOOLING

tool	Reference	Designation
[1350-ZZ] 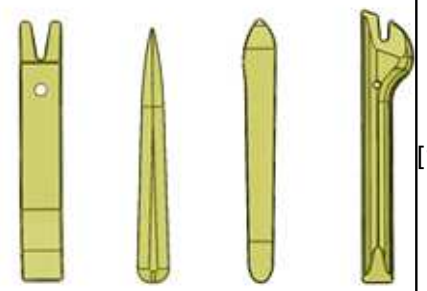 *e5ag02mt*	[1350-ZZ]	Stripping tools

2 - REMOVING

Place the vehicle on a 2-post lift.

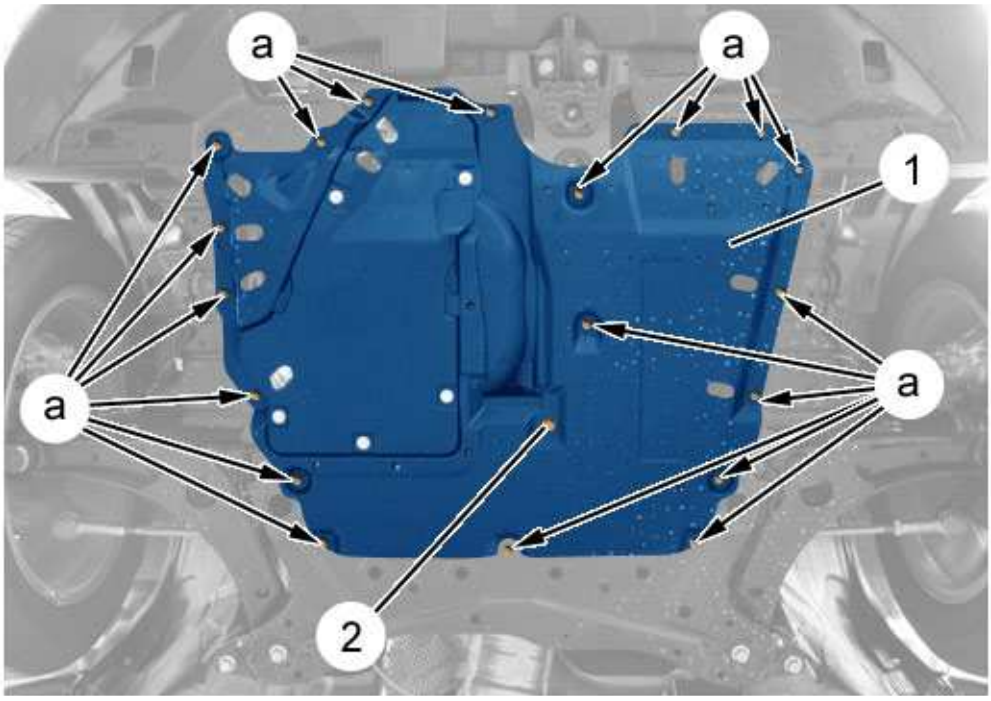

c5jg0z7d

Unclip the clips (at "a") ; Using tool [1350-ZZ].

Remove :

- The securing bolt (2)
- The protective panel under the engine (1)

3 - REFITTING

> **WARNING :** Always replace the damaged fixings

Proceed in the reverse order to removal.

IDENTIFICATION - DATA : F5M43-F5MBB-F6MBA MANUAL GEARBOX

1 - IDENTIFICATION

1 - 1 - Exterior presentation

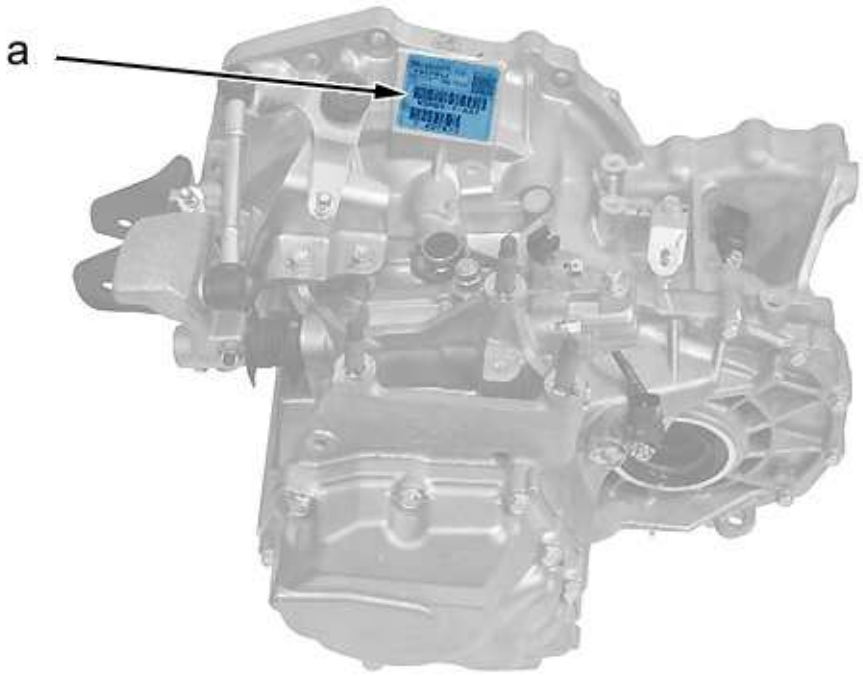

b2cm0f6d

"a" : Identification label.

1 - 2 - Interior presentation

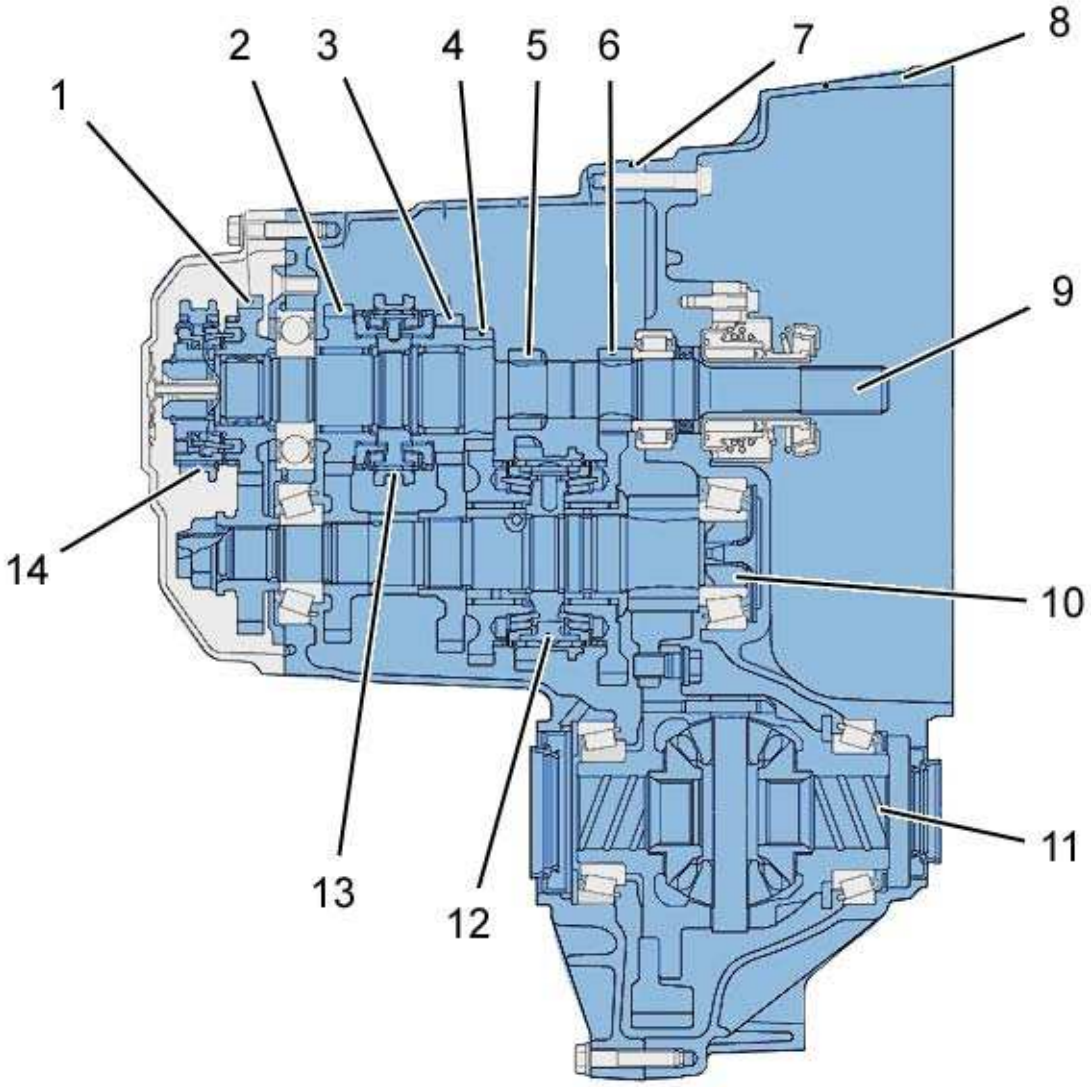

b2cm0f7p

(1) 5th speed gear.

(2) 4th gear.

(3) 3rd gear pinion.

(4) 2nd gear.

(5) Reverse gear .

(6) 1st gear.

(7) gearbox casing.

(8) clutch housing.

(9) input shaft.

(10) output shaft.

(11) Differential housing.

(12) 1st/2nd gear synchronizer.

(13) 3rd/4th synchronizer.

(14) 5th gear synchronizer.

2 - DATA

2 - 1 - Application

Research type	Legislation type	Type of gearbox/Stages
4A92 MMC	4A92	F5M43
4B11 MMC	4B11	F5MBB
4N13 MMC	4N13	F6MBA

2 - 2 - Gear

Type of gearbox	F5M43
1st	3,727
2nd	1,947
3rd	1,343
4th	0,976
5th	0,804
Reverse gear	3,727
crown wheel and pinion (Differential output)	4,333
crown wheel and pinion (rear)	

Type of gearbox	F5MBB	F6MBA
1st	3,833	3,818
2nd	1,913	2,045
3rd	1,333	1,290
4th	1,028	0,974
5th	0,820	0,897
6th		0,790
Reverse gear	3,583	4,139
crown wheel and pinion (Differential output)	4,235	4,058 (1st ; 2nd ; 3rd ; 4th)
		3,450 (5th ; 6th ; Reverse gear)
crown wheel and pinion (rear)		

2 - 3 - Speed at 1000 revs/min (in km/h)

Engine version	F5M43	F5M43	F5MBB	F5MBB
Final drive	4,333		4,235	
differential	-		-	
tyre	215/65 R16	215/60 R17	215/65 R16	215/60 R17
Run-out (mm)	2,089	2,167	2,089	2,167
1st	7,76	8,05	7,72	8,00
2nd	14,86	15,41	15,47	16,05
3rd	21,54	22,34	26,34	27,22
4th	29,64	30,74	28,79	29,87
5th	35,98	37,32	36,09	37,44
6th				
Reverse gear	7,76	8,05	8,26	8,57

Engine version	F6MBA	F6MBA
Final drive	4,058 (1st ; 2nd ; 3rd ; 4th)	
	3,450 (5th ; 6th ; Reverse gear)	
differential	-	
tyre	215/65 R16	215/60 R17
Rolling circumference (mm)	2,089	2,167
1st	8,09	8,39
2nd	15,10	15,67
3rd	23,94	24,84
4th	31,71	32,90
5th	40,50	42,02
6th	45,99	47,71
Reverse gear	7,78	9,11

3 - LUBRICATION

3 - 1 - gearbox

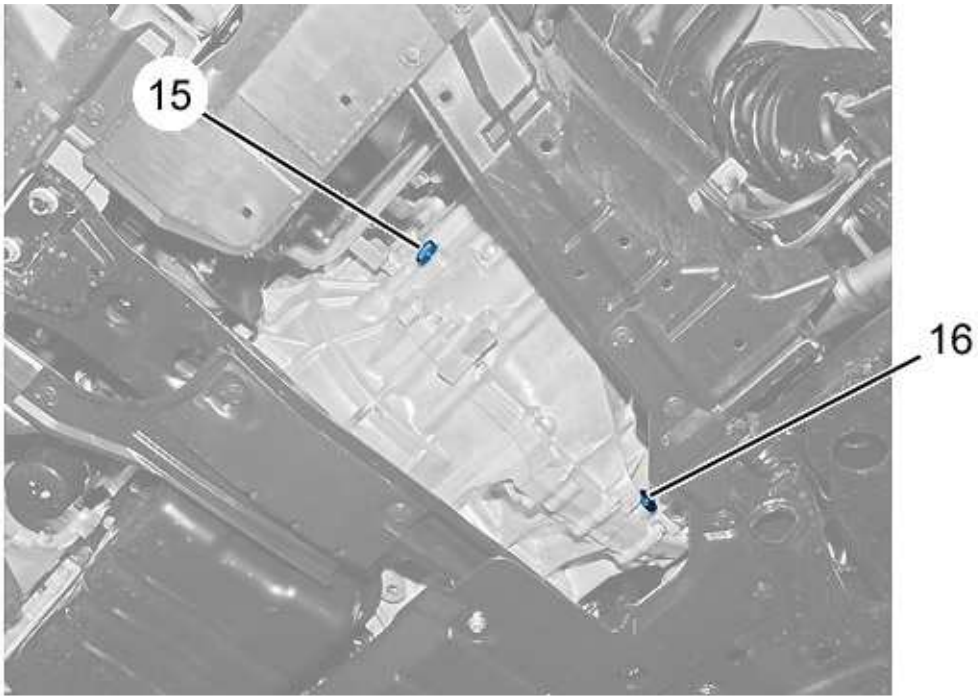

b2cm0f8d

(15) filling and level plug.

(16) drain plug.

Type of oil : NEW MULTI GEAR OIL- DIA QUEEN API GL-3-SAE 75 W 80.

Type of gearbox	F5M43	F5MBB	F6MBA
Oil quantity	2 litres	2,5 litres	2,2 litres

3 - 2 - Transfer box

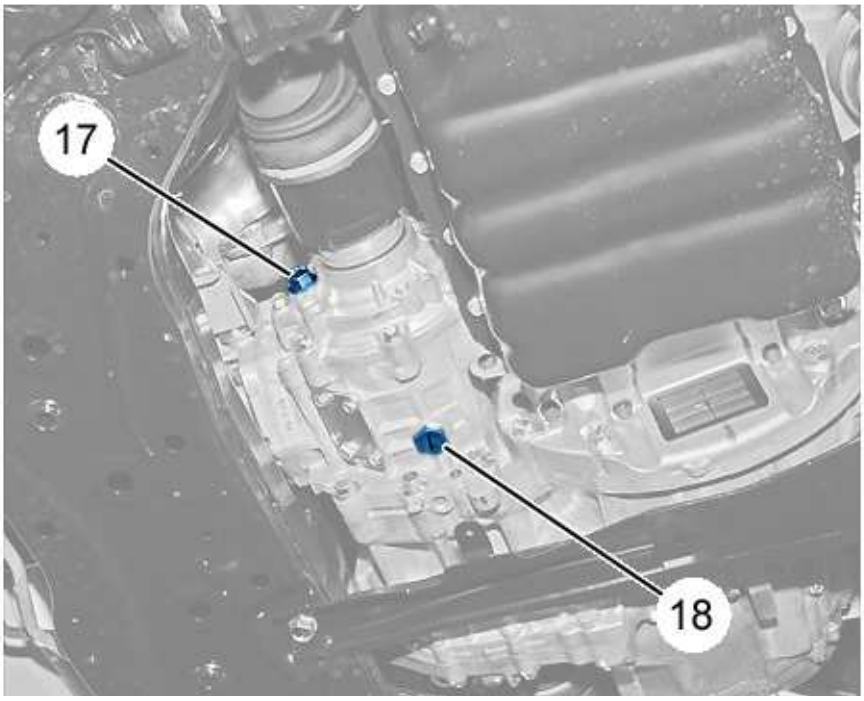

b2cm0f9d

(17) filling and level plug.

(18) drain plug.

Type of oil : API GL-5 SAE80.

Quantity : 0,49 litres.

> **NOTE :** The transfer box is sealed; it is not necessary to drain it in order to remove the propeller shaft and the front transverse drive shafts

TIGHTENING TORQUES : MANUAL GEARBOX

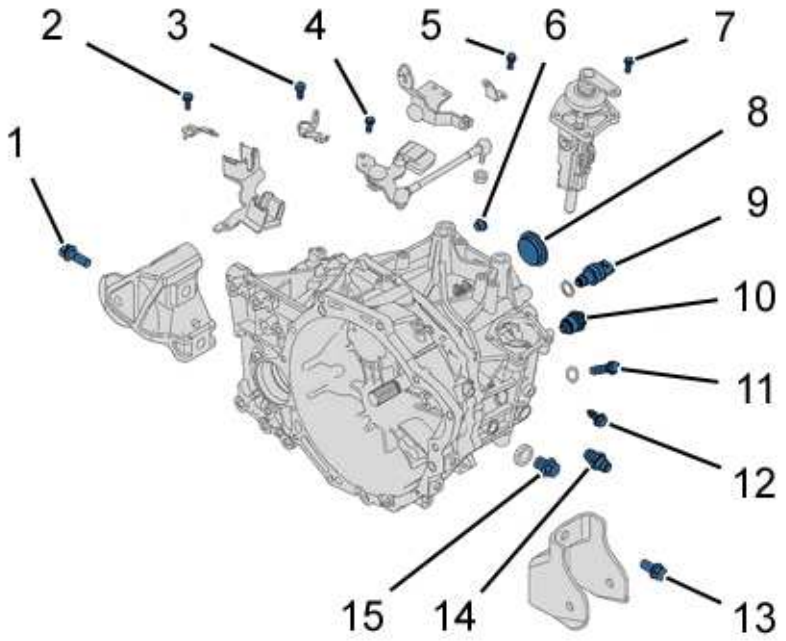

b2cb0djd

Reference	Designation	Tightening torque
(1)	Rear support bolt	9 daNm
(2)	bolts	2 daNm
(3)	bolts	2 daNm
(4)	bolts	2 daNm
(5)	bolts	2 daNm
(6)	Plug	2 daNm
(7)	Gear selector fixing bolt	2 daNm
(8)	Plug	5 daNm
(9)	Reverse lamp switch	4 daNm
(10)	Ball immobiliser	4 daNm
(11)	Reverse idle gear bolt	3 daNm
(12)	bolts	3 daNm
(13)	Front support bolt	9 daNm
(14)	Ball immobiliser	3 daNm
(15)	Gearbox filler bolt	4 daNm

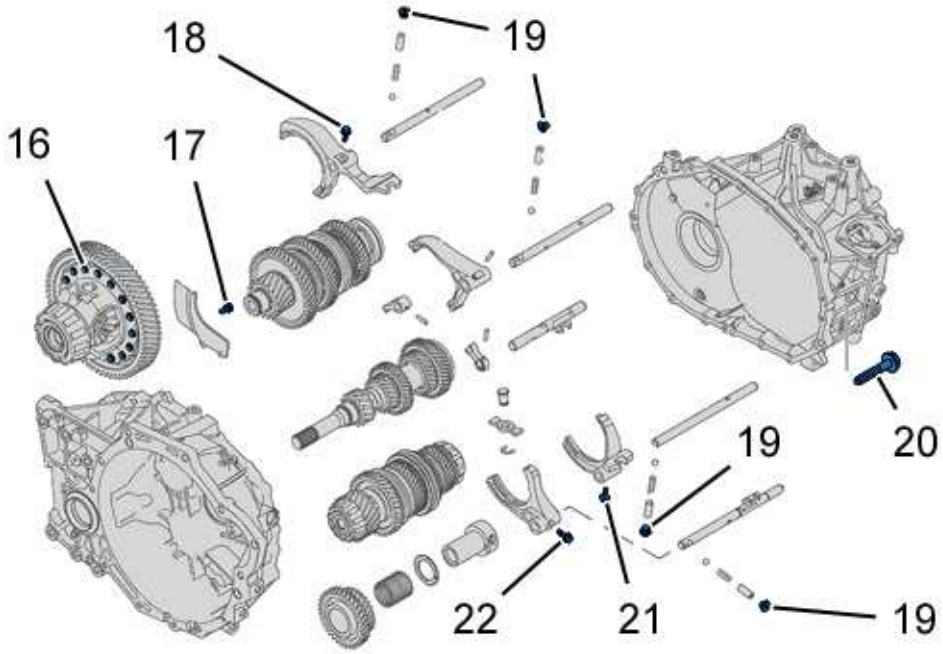

b2cb02td

Reference	Designation	Tightening torque
(16)	Differential bolt	10 daNm
(17)	Oil separator bolt	1 daNm
(18)	Fork fixing screws	2 daNm
(19)	Locking bolt	2 daNm
(20)	bolts	3 daNm
(21)	Fork fixing screws	2 daNm
(22)	Fork fixing screws	2 daNm

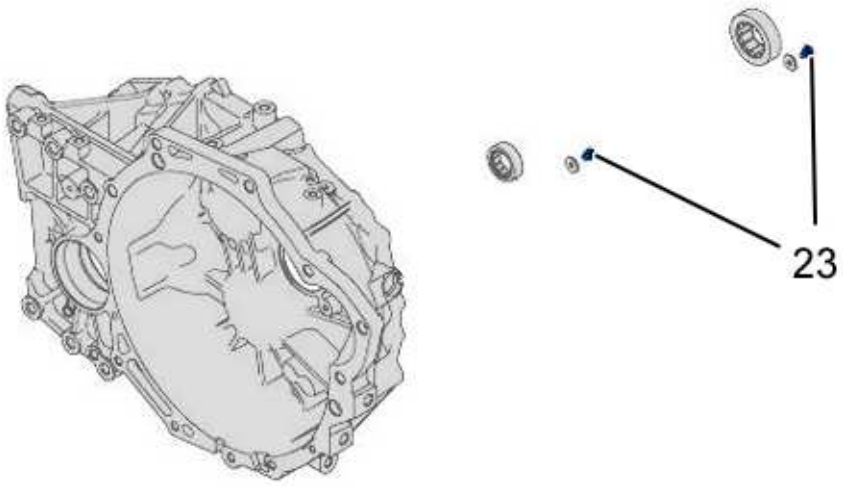

b2cb0dkd

Reference	Designation	Tightening torque
(23)	Bearing retaining bolt	1,1 daNm

DISMANTLING - RE-ASSEMBLY : DRIVESHAFTS

ESSENTIAL : Observe the safety and cleanliness recommendations

1 - TOOLING

tool	Reference	Designation
[6310-T1] 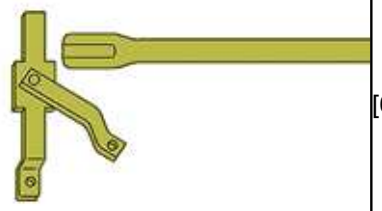 *e5ab06yt*	[6310-T]	hub immobilising tool
[0622]  *e5ag02vt*	[0622]	pivot ball-joint uncoupling lever
[0418]  *e5ab18wt*	[0418]	fitting mandrel
	[0414-E]	fitting mandrel

[0414-E]  *e5ab113t*		
[0709] 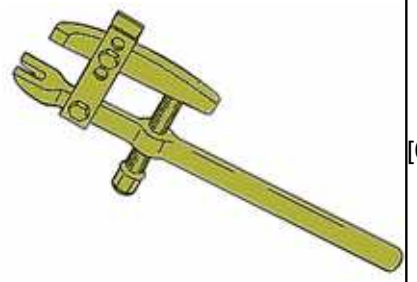 *e5ag02wt*	[0709]	ball-joint extractor

2 - REMOVING

2 - 1 - Common operations

> **WARNING :** Never brake to slacken the drive shaft nut

Put the vehicle on a hoist.

Disconnect the ancillaries battery.

Drain gearbox.

Remove the front wheels.

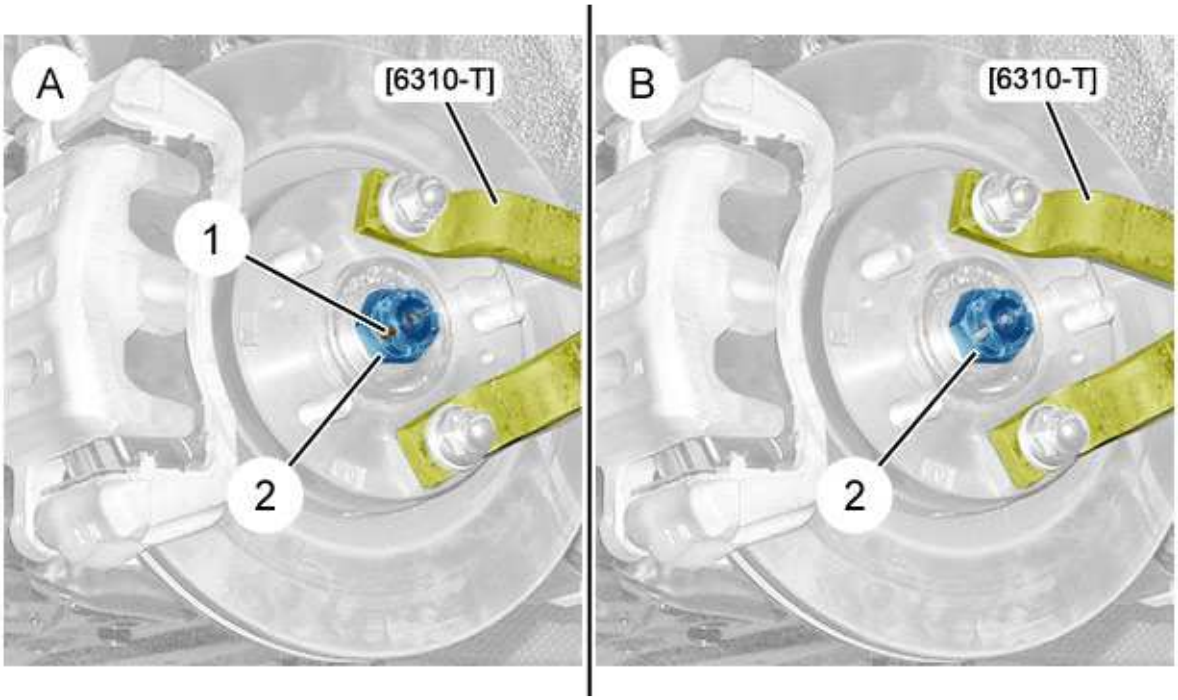

b2fg09kd

A : Nut with pin.

B: Self-locking nut.

Fit the tool [6310-T].

Remove :

- The pin (1) (according to equipment)
- The drive shaft nut (2)
- The washer

Remove the tool [6310-T].

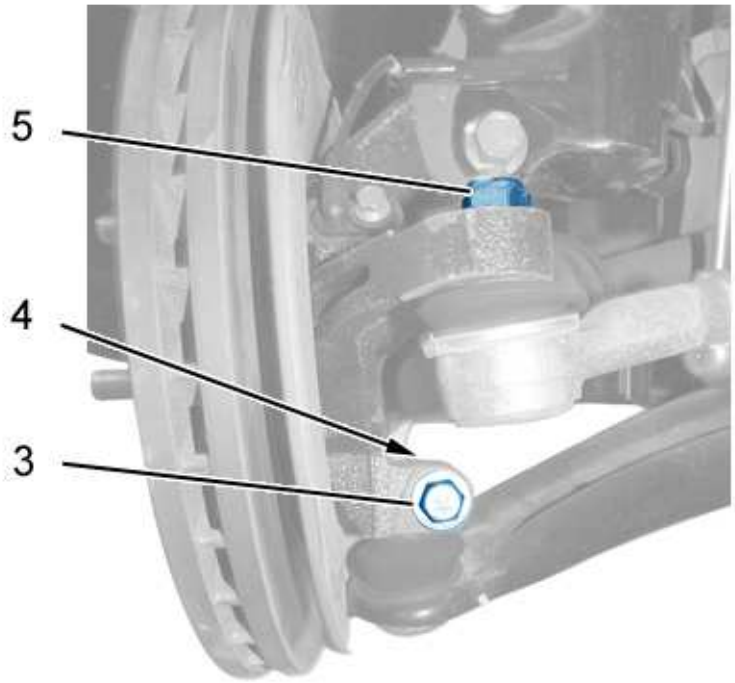

b2fg08jd

Remove :

- The nut (4) of the pivot bottom ball-joint
- The bolt (3) of the pivot lower ball-joint

Uncouple the pivot lower ball-joint ; Using tool [0622].

Remove the nut (5) of the steering rod ball joint .

Uncouple the steering rod ball-joint.

2 - 2 - L.H. driveshaft

Move the strut towards the outside.

Detach the drive shaft from the hub.

Remove the driveshaft .

2 - 3 - Right hand drive shaft

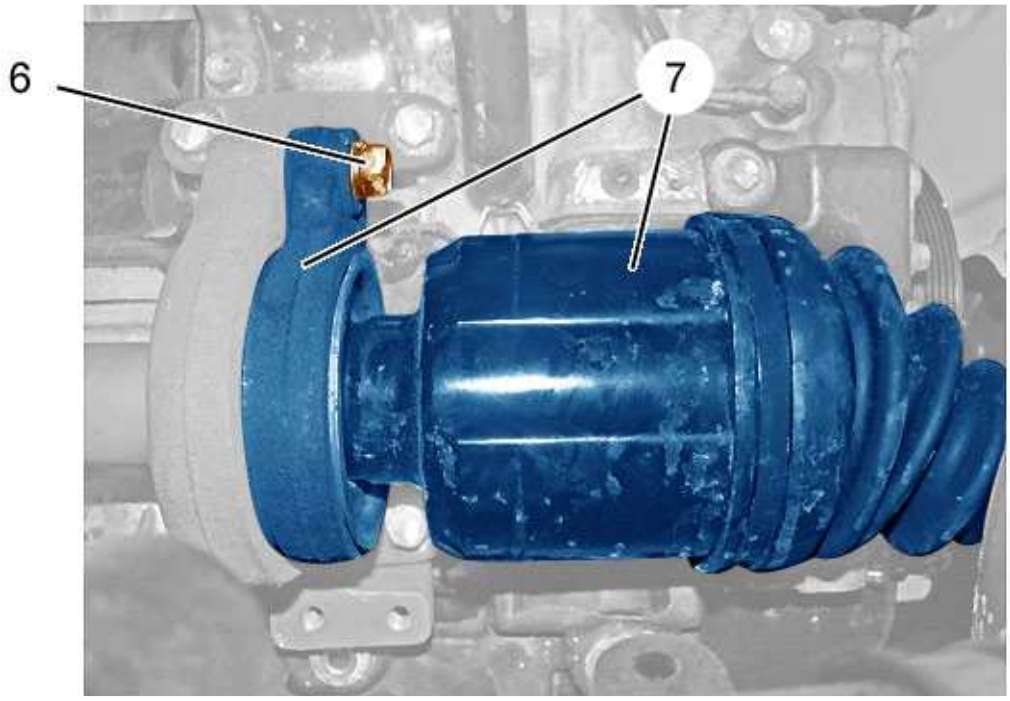

b2fg093d

Remove the bolt (6).

Move the strut towards the outside.

Detach the drive shaft from the hub.

Uncouple the drive shaft and bearing assembly (7).

Remove the drive shaft and bearing assembly (7).

2 - 4 - Checking

Check: :

- The absence of play in the driveshaft joints
- The condition of the gaiters
- **Replace the driveshaft gaiter(s)** (if necessary)

3 - REFITTING

WARNING : Adhere to the tightening torques

WARNING : Always fit new locknuts

SPECIAL FEATURE :

FOR : 1CMJ - B0FLT : DIESEL DV6C UE6 85KW;DBMCT : 4X2 6-SPEED MANUAL GEARBOX

FOR : 1CMJ - DBMCT : 4X2 6-SPEED MANUAL GEARBOX;B0FRQ : 1.8L MMC DIESEL

FOR : 1CMJ - DBMCT : 4X2 6-SPEED MANUAL GEARBOX;B0FBM : DV6C TURBO DIESEL

Tightening torques :

- **Road wheels**
- **Driveshafts**
- **Front suspension**



b2fg095d

Replace :

- The Nylstop nuts (5)
- The circlip (8)

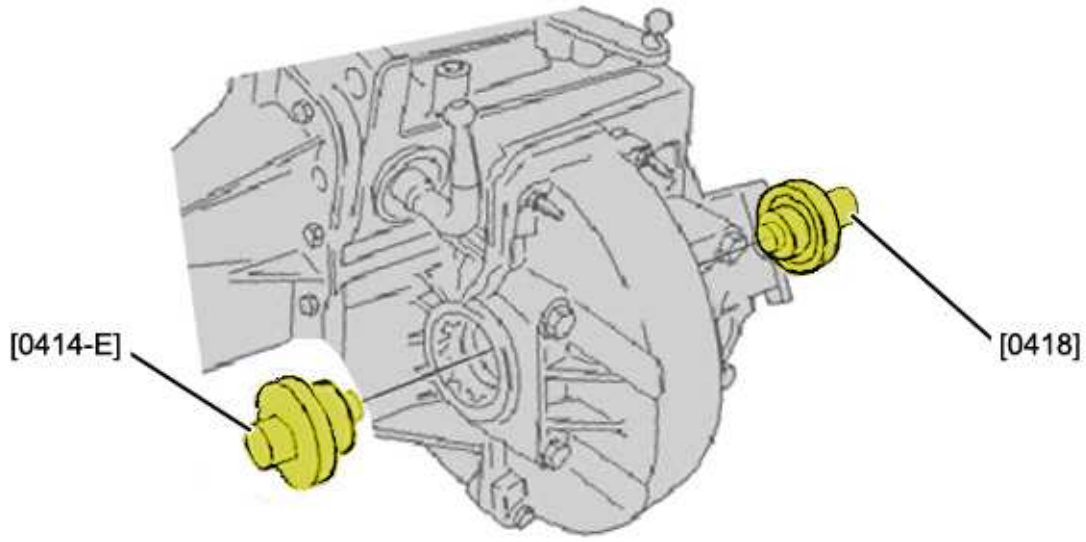

b2fg096d

Always replace the ring seals ; Using tools [0418] and [0414-E].

NOTE : Fill the space between the oil seal lips with grease

3 - 1 - Right hand drive shaft

Refit the drive shaft and bearing assembly (7).

Refit bolt (6).

Insert the drive shaft splines in the differential and in the wheel hub.

3 - 2 - L.H. driveshaft

Engage the driveshaft in the differential.

Insert the drive shaft splines in the differential and in the wheel hub.

3 - 3 - Common operations

Refit :

- The pivot lower ball-joint ; Using tool [0622]
- The bolt (3) of the pivot lower ball-joint
- The nut (4) of the pivot bottom ball-joint
- The steering rod swivel joint
- The steering rod swivel joint nut (5)
- The washer
- The drive shaft nut (2) : Using tool [6310-T]

- The pin (1) (according to equipment)
- The front wheel

Fill the gearbox.

Return the vehicle to its wheels.

> **WARNING :** Perform the operations that are required following a reconnection of the ancillaries battery

Reconnect the ancillaries battery.

REPLACEMENT : DRIVESHAFT GAITERS

ESSENTIAL : Observe the safety and cleanliness recommendations

1 - TOOLING

Tool	REFERENCE	Designation
[0412] 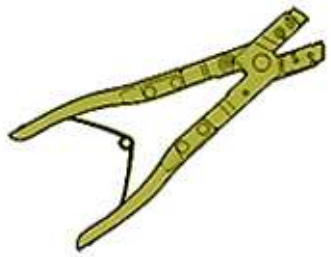 *e5ah00bt*	[0412]	Oetiker clip pliers
[0413]  *e5ah00ct*	[0413]	Pliers for wing clips

2 - REPLACEMENT : DRIVESHAFT GAITERS (GEARBOX END)

2 - 1 - Removing

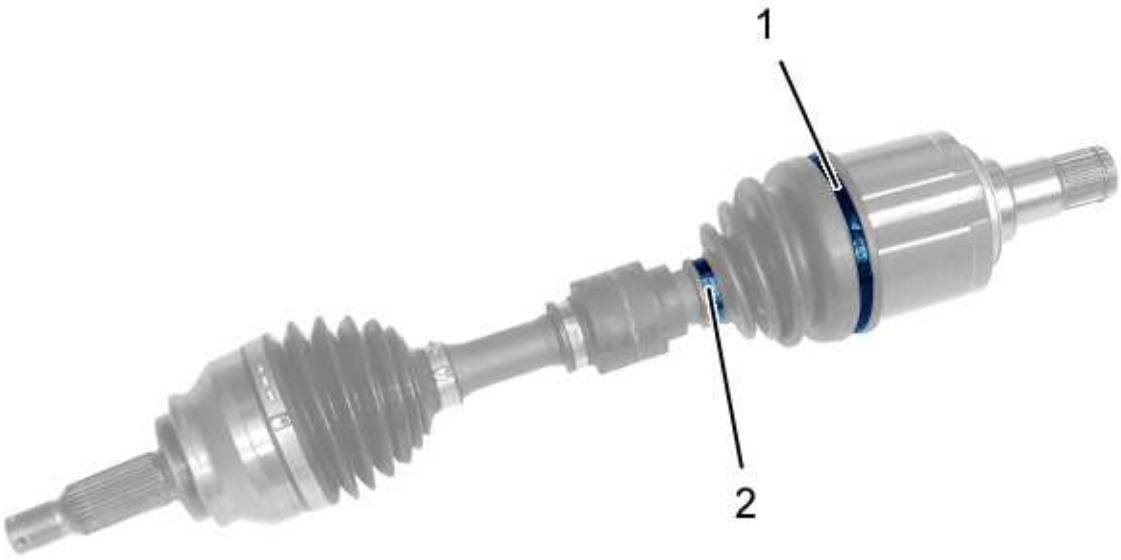

b2fm010d

Cut the clips (1), (2).

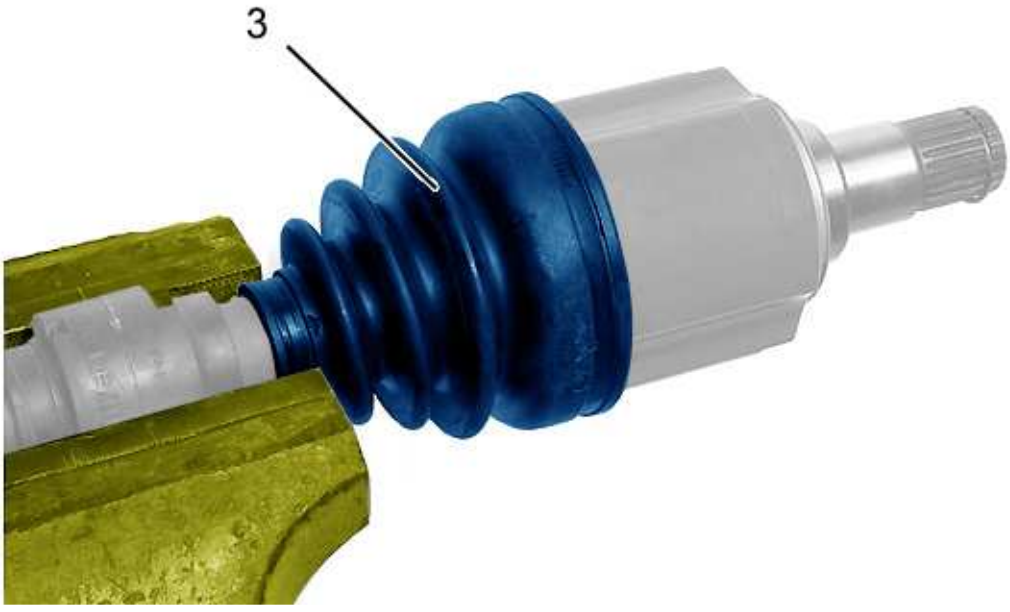

b2fm011d

Support the drive shaft in a vice fitted with soft jaws.

Move aside the driveshaft gaiter (3).

Remove as much grease as possible from inside the gaiter (3).

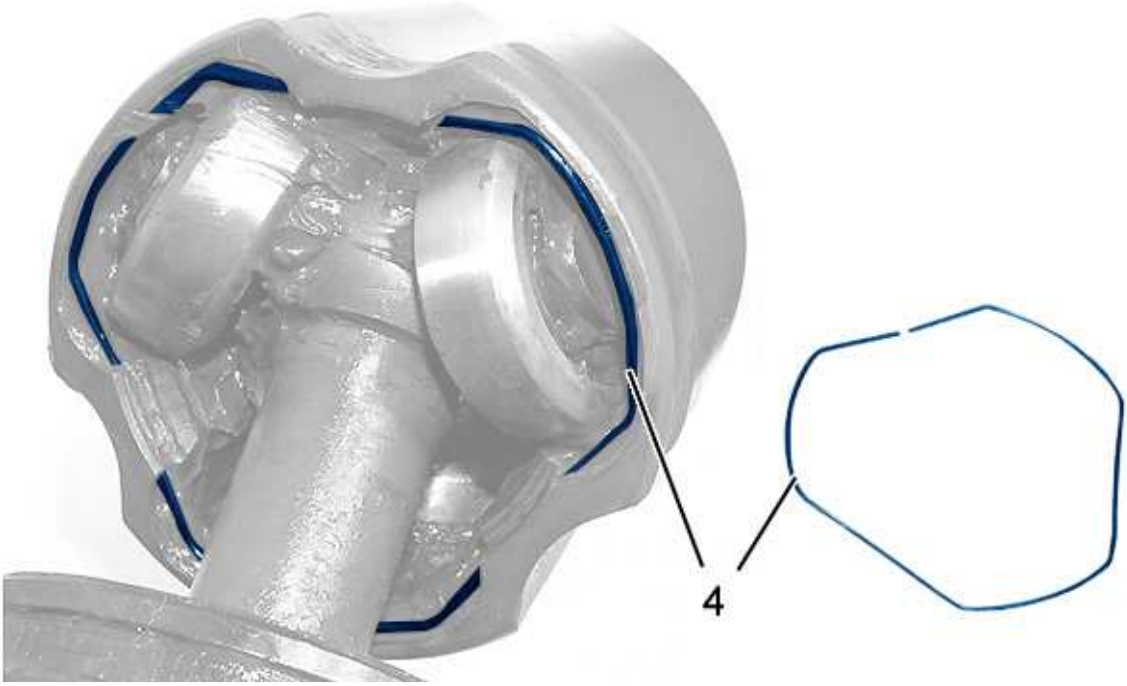

b2fm012d

Unclip the clip (4).



b2fm013d

WARNING : Place your hand under the bowl (5) to catch the roller (6)

Remove :

- The housing (5)
- The roller (6)
- The clip (4)

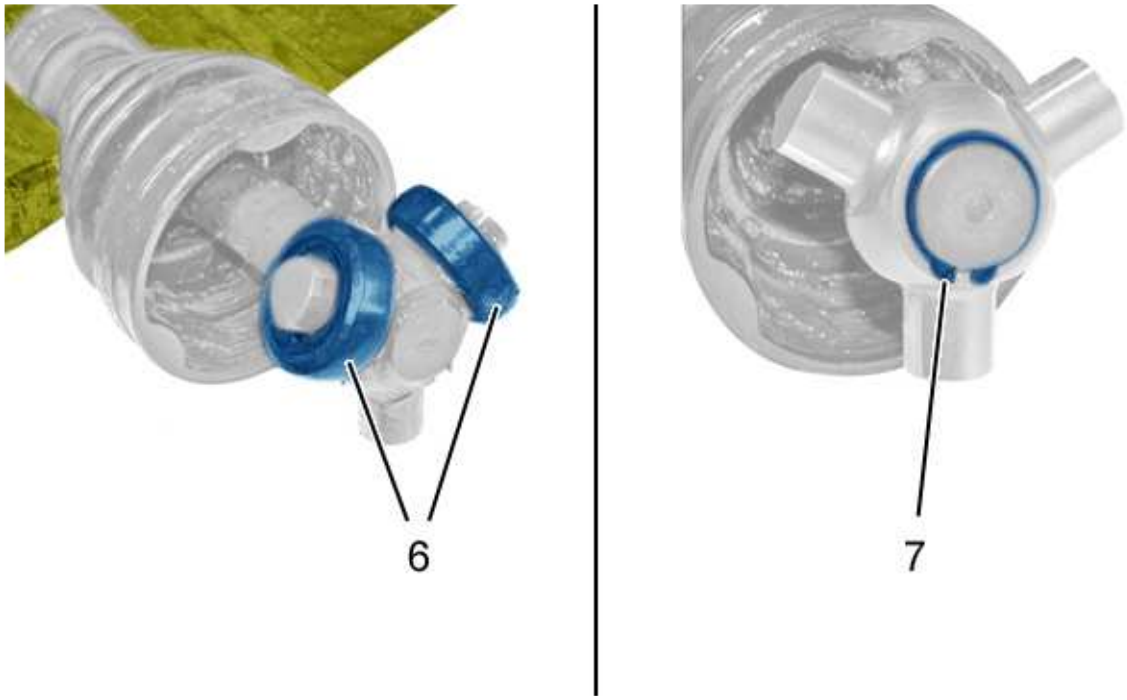

b2fm014d

Remove the 2 rollers (6) remaining.

Remove the excess grease from the gaiter and on the tripod.

Remove circlip (7).



b2fm015d

Remove the tripod (8) ; Using a hammer and a pin punch.

Remove the driveshaft gaiter (3).

2 - 2 - Refitting

Refit :

- The gaiter (3) onto the driveshaft
- The tripod (8)
- The circlip (7)

Fill the interior of the gaiter with the special grease.

Fit the clip (4) onto the driveshaft.

Refit :

- The 3 rollers (6)
- The housing (5)

Clip the clip (4) onto the bowl.

Fit the gaiter on the housing.

Fit new clips (1), (2) Refer to chapter 4.

3 - REPLACEMENT : DRIVESHAFT GAITERS (ROAD WHEEL SIDE)

> **NOTE :** The driveshaft bowl on the wheel side cannot be removed. The replacing of a wheel-end driveshaft gaiter necessitates the removal of the gearbox-end gaiter

3 - 1 - Removing

Remove the driveshaft gaiter (3) (Gearbox end) (Refer to chapter 2.1).

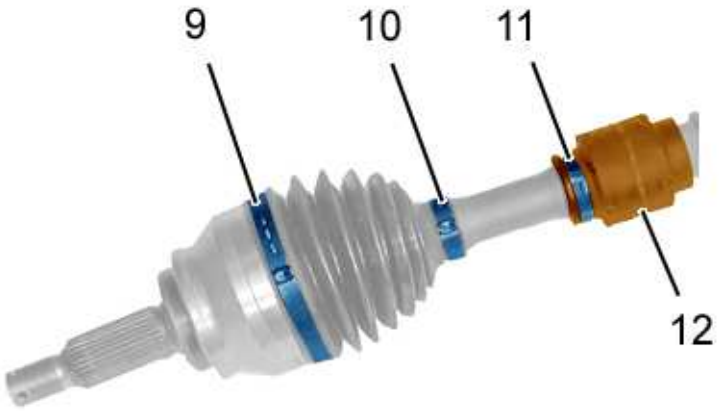

b2fm016d

NOTE : Only the left hand front driveshaft is fitted with a damper (12) (L.H.D.)

Cut the clips (9), (10), (11).

Remove the damper (12).

NOTE : To remove the damper (12), hold it in a vice then pull on the driveshaft



b2fm017d

Move aside the driveshaft gaiter (13).

Remove as much grease as possible from inside the gaiter (13).

Remove the gaiter (13).

3 - 2 - Refitting

Refit the gaiter (13) onto the driveshaft.

Fill the interior of the gaiter with the special grease.

Refit new clips (9), (10) Refer to chapter 4.

Refit :

- The damper (12)
- A new clamping collar (11)
- The drive shaft gaiter (Gearbox end) (Refer to chapter 2.2)

4 - CLIPS

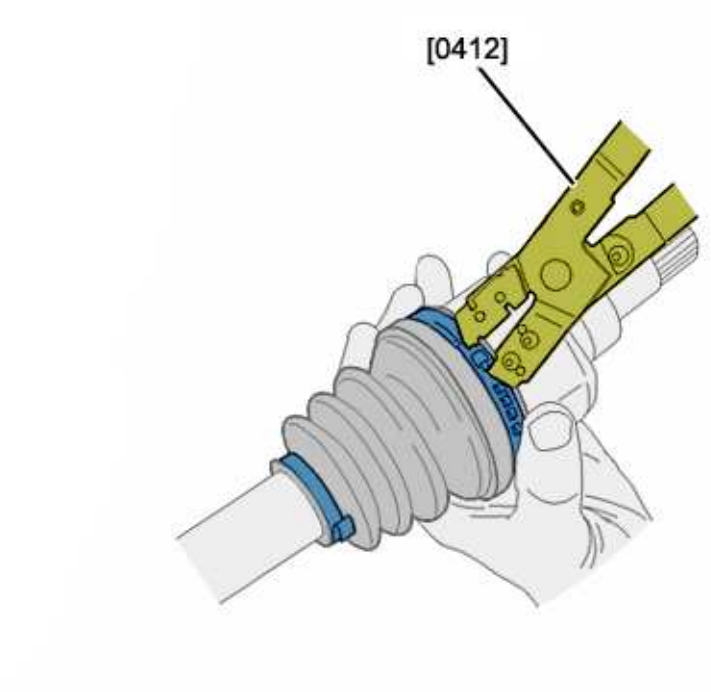

b2fh02fd

Position the driveshaft gaiter .

Refit the clips (using the tool [0412]).

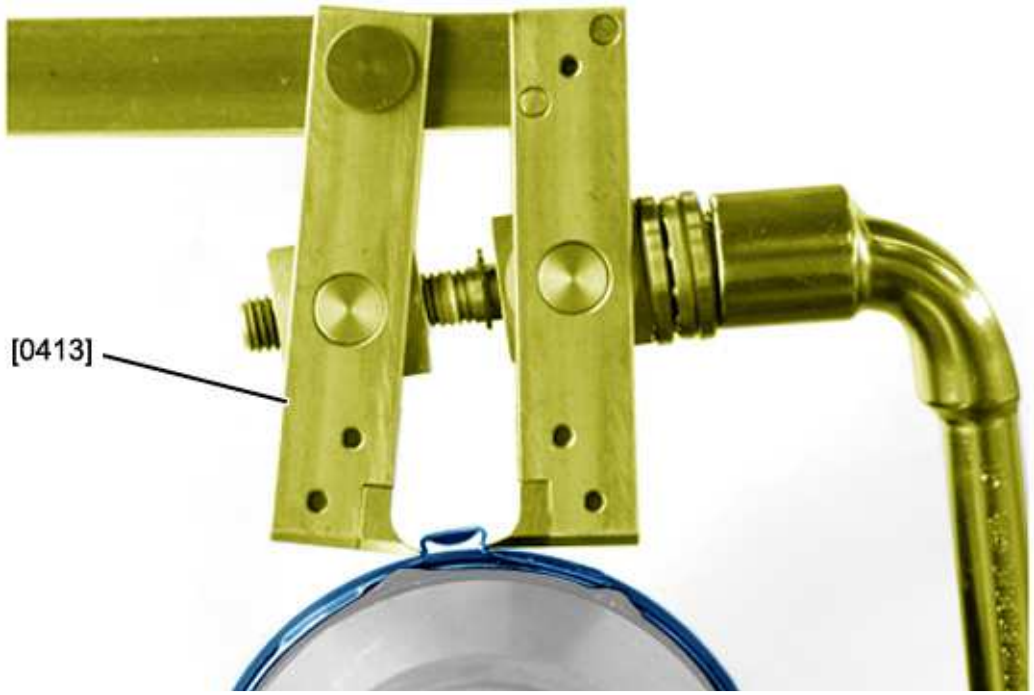

b2fh00bd

Tighten the clips ; (using the tool [0413]).

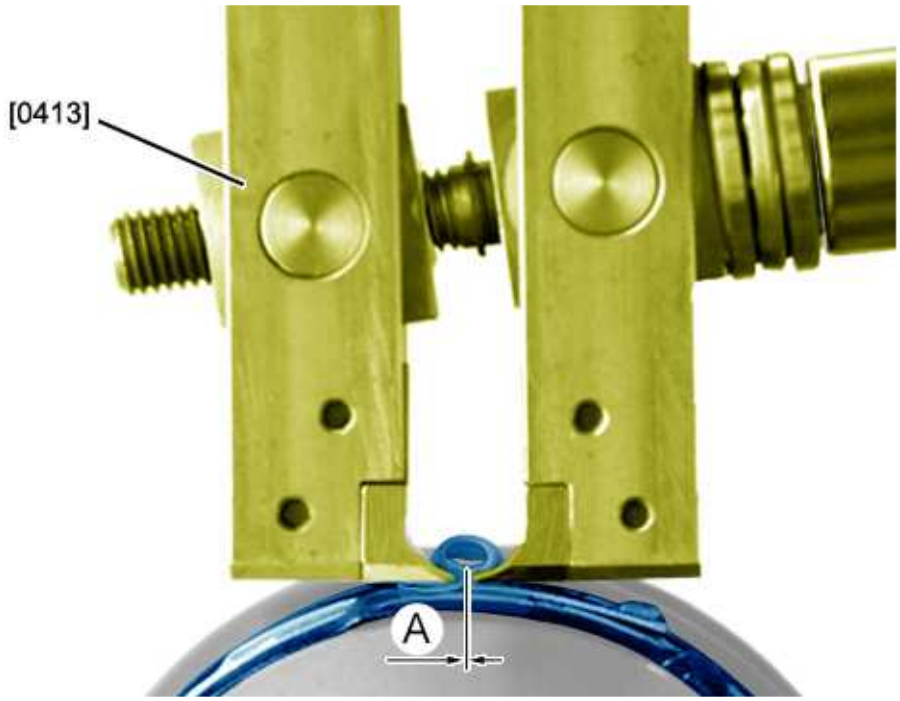

b2fh00cd

Tighten the clips until they make contact ("A" = 0 mm).

Remove the tool [0413].

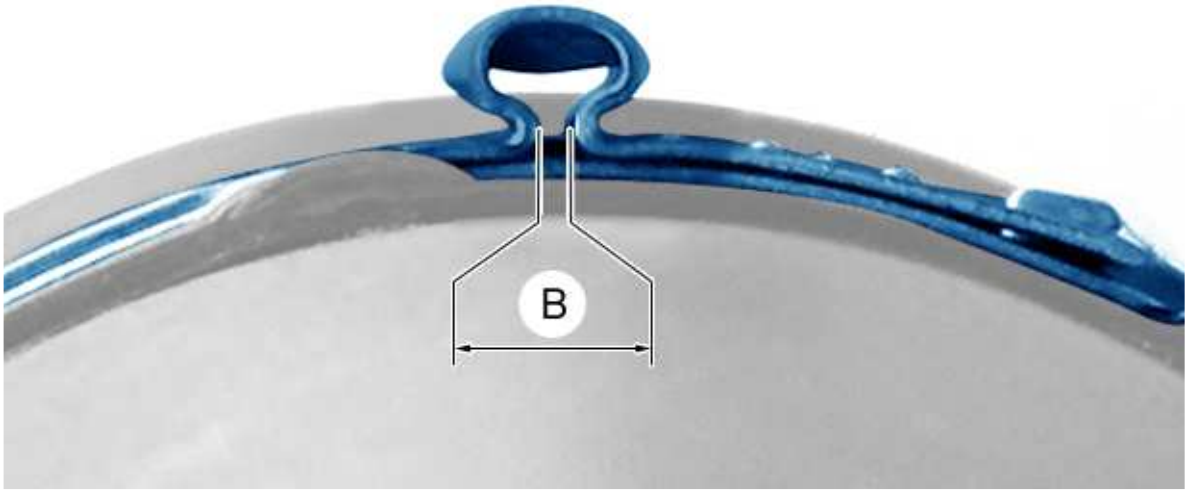

b2fh00dd

After tightening check that the space "B" = 0,5 to 1 mm.

TIGHTENING TORQUES : ROAD WHEELS

1 - RECOMMENDATIONS

WARNING : The use of impact wrenches to refit the wheel bolts and wheel anti-theft bolts is strictly prohibited

WARNING : The wheels are always tightened with dry bolts

WARNING : When installing a new steel wheel for the first time, Always double tighten the wheel, to avoid any risk of slackening

NOTE : Double tightening consists of tightening to the specified torque followed by slackening then retightening to the specified torque

Ensure that the anti-theft wrench is positioned correctly on refitting.

WARNING : Tighten the wheel bolts using a torque wrench

2 - TIGHTENING TORQUES : ROAD WHEELS

vehicles	Steel rims	aluminium rims
C-Zero	10 daNm	10 daNm
AX	9 daNm	10 daNm
SAXO	9 daNm	10 daNm
C1 (B0)	10 daNm	10 daNm
C1 (B4)	10 daNm	10 daNm
C2	9 daNm	10 daNm
C2 China	9 daNm	10 daNm
C3 (A8), (A31)	9 daNm	10 daNm
C3 Pluriel	9 daNm	10 daNm
C3 (A51)	10 daNm	10 daNm
DS3	10 daNm	10 daNm
C3 Picasso	10 daNm	10 daNm
C4 Cactus	10 daNm	10 daNm
C3 Aircross	10 daNm	10 daNm
ZX	9 daNm	10 daNm
XSARA	9 daNm	10 daNm
XSARA PICASSO	9 daNm	10 daNm
C4	10 daNm	10 daNm
C-Quatre China	10 daNm	10 daNm
C4 Picasso (B58)	10 daNm	10 daNm
C4 Picasso (B78)	10 daNm	10 daNm
DS4	10 daNm	10 daNm

C4 L (B73) China	10 daNm	10 daNm
C4 L (B73) Russia	10 daNm	10 daNm
C4 (B73) Mercosur	10 daNm	10 daNm
BX	9 daNm	10 daNm
XANTIA	9 daNm	10 daNm
DS5 (B81)	10 daNm	10 daNm
DS5 (B8C) China	10 daNm	10 daNm
DS 5LS (B753)	10 daNm	10 daNm
DS 6 (B754)	10 daNm	10 daNm
C5 (X3, X4)	9 daNm	10 daNm
C5 (X7, XW)	10 daNm	10 daNm
SYNERGIE	9 daNm	10 daNm
XM	9 daNm	10 daNm
C6	-	10 daNm
C8	10 daNm	10 daNm
C-Crosser	10 daNm	10 daNm
C4 Aircross	10 daNm	10 daNm
C-Élysée	10 daNm	10 daNm
C-Elysée (M43C) China	10 daNm	10 daNm
C3-XR (M44C) China	10 daNm	10 daNm
C15	9 daNm	-
C25	9 daNm	-
NEMO	9 daNm	10 daNm
BERLINGO (M49, M59)	9 daNm	9 daNm
BERLINGO (B9)	10 daNm	10 daNm
DISPATCH	10 daNm	9 daNm
RELAY (15 inch wheels)	16 daNm	16 daNm
RELAY (16 inch wheels)	18 daNm	18 daNm

3 - WHEEL VALVE

3 - 1 - Vehicles not equipped with tyre under-inflation detection system

Always replace the wheel valves when changing the tyres.

> **WARNING :** Vehicles DS3 Racing ; Tighten the wheel valves to 0,4 daNm

3 - 2 - Vehicles fitted with a tyre under-inflation detection system

Observe the tightening torque of the wheel valve nuts : Tighten to 0,8 daN.m.

TIGHTENING TORQUES : DRIVESHAFTS

1 - RECOMMENDATION

WARNING : Tighten the driveshaft nuts ; With the help of a torque spanner

2 - TIGHTENING TORQUES : NUT ; DRIVESHAFT BEARING

	Drive shaft nut		Front driveshaft bearing
Vehicles	Tightening torques	Angular tightening	Tightening torques
CITROËN C-ZERO	16 daNm	-	-
CITROËN C1 (B0)	21,6 daNm	-	-
CITROËN C1 (B4)	21,6 daNm	-	-
CITROËN C2	24,5 daNm	-	1 daNm
CITROËN C3 (A8), (A3)	24,5 daNm	-	2 daNm
CITROËN C3 PLURIEL			
CITROËN C3 (A51)	24,5 daNm (30 mm spanner)	-	2 daNm
	31,2 daNm (35 mm spanner)	-	
CITROËN C3 (Ai51) Mercosur	24,5 daNm (30 mm spanner)	-	2 daNm
	31,2 daNm (35 mm spanner)	-	
DS3	24,5 daNm (30 mm spanner)	-	2 daNm
	31,2 daNm (35 mm spanner)	-	
CITROËN C-ÉLYSÉE	24,5 daNm	-	2 daNm
CITROËN C-ÉLYSÉE China	24,5 daNm	-	2 daNm
Citroën C3-XR (M44) China	31.2 daNm	-	2 daNm
DS4 (B75)	31,2 daNm	-	2 daNm
DS5 (B81) (*)	31,2 daNm	-	2 daNm
DS5 (B8C) China	31,2 daNm	-	2 daNm
DS 5LS (B753)	31,2 daNm	-	2 daNm
DS 6 (B754)	31,2 daNm	-	2 daNm
CITROËN C4 (B5)	32 daNm	-	1,8 daNm
CITROËN C4 (B7)	30,5 daNm	-	2 daNm
CITROËN C4 L (B73) China	32,5 daNm	-	2 daNm
CITROËN C4 L			

(B7R) Russia	32,5 daNm	-	2 daNm
CITROËN C4 Lounge (B7M) Mercosur	32,5 daNm	-	2 daNm
CITROËN C3 AIRCROSS (Ai58) Mercosur	24,5 daNm (30 mm spanner)	-	2 daNm
	32,5 daNm (35 mm spanner)	-	
CITROËN C3 PICASSO (Ai58) Mercosur	24,5 daNm (30 mm spanner)	-	2 daNm
	32,5 daNm (35 mm spanner)	-	
CITROËN C3 PICASSO	31,2 daNm	-	2 daNm
CITROËN C4 CACTUS (E3)	24,5 daNm	-	1,2 daNm
CITROËN C4 PICASSO (B58)	32,5 daNm	-	2 daNm
CITROËN C4 PICASSO (B78)	28,5 daNm	-	2 daNm
CITROËN XSARA PICASSO (6N), (N8)	32,5 daNm	-	2 daNm
CITROËN C5 (X3), (X4)			2 daNm
CITROËN C5 (X7), (XW)			2 daNm
CITROEN BERLINGO	31,2 daNm	-	2 daNm
CITROËN C6	34,5 daNm	-	2 daNm
CITROËN C8			
CITROEN DISPATCH	34,5 daNm	-	2 daNm
CITROEN C15	Pre-tighten to 10 daNm	Angular tightening of 60°	2 daNm
CITROËN NEMO	Pre-tighten to 7 daNm	Angular tightening of 55°	-
CITROEN RELAY	Pre-tighten to 15 daNm	Angular tightening of 35°	-

NOTE : (*) Except hybrid vehicles

3 - TIGHTENING TORQUES : 4 WHEEL DRIVE TRANSMISSION

Vehicles	Transverse driveshaft nut (Front / Rear)	Longitudinal bearing bolt	Longitudinal driveshaft nuts on rear axle controlled clutch
CITROËN C-CROSSER	16 daNm	4 daNm	5,4 daNm

CITROËN C4 AIRCROSS	14,4 daNm (Nut with pin) 27 daNm (Nut without pin)	4 daNm	5,4 daNm

4 - TIGHTENING TORQUES : HYBRID VEHICLES

Vehicles	Front driveshaft nut	Rear driveshaft nut	Front driveshaft bearing	Rear driveshaft bearing
DS5 (B81)	32,5 daNm	34,5 daNm	2 daNm	1 daNm

TIGHTENING TORQUES : FRONT SUSPENSION

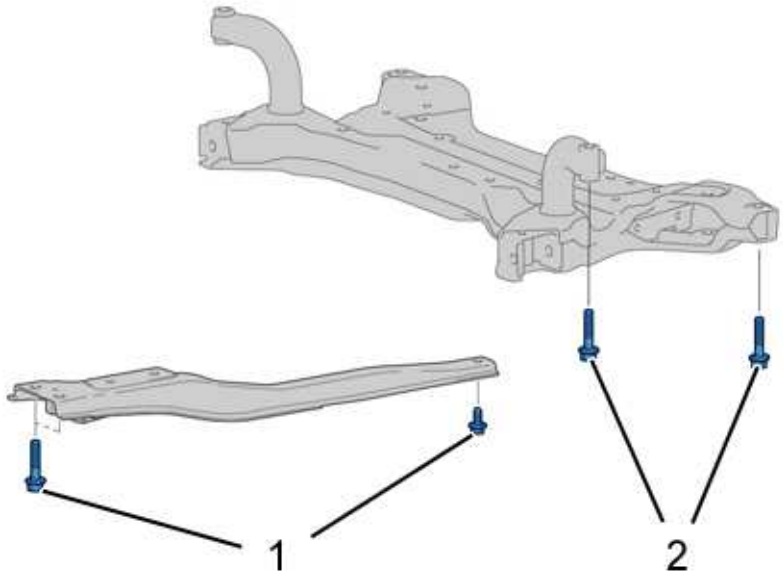

b3cm010d

Reference	Designation	Tightening torque
(1)	bolts - Subframe extension	7 daNm
(2)	bolts - Sub-fame on body	11 daNm

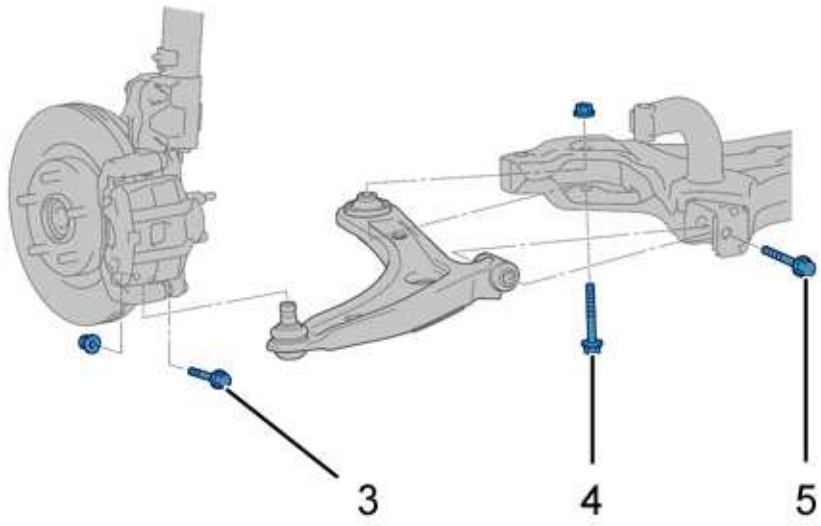

b3cm011d

Reference	Designation	Tightening torque

(3)	Pivot lower ball-joint fixing	7,1 daNm
(4)	Rear fixings (Lower suspension arm)	11 daNm
(5)	Front fixings (Lower suspension arm)	11 daNm

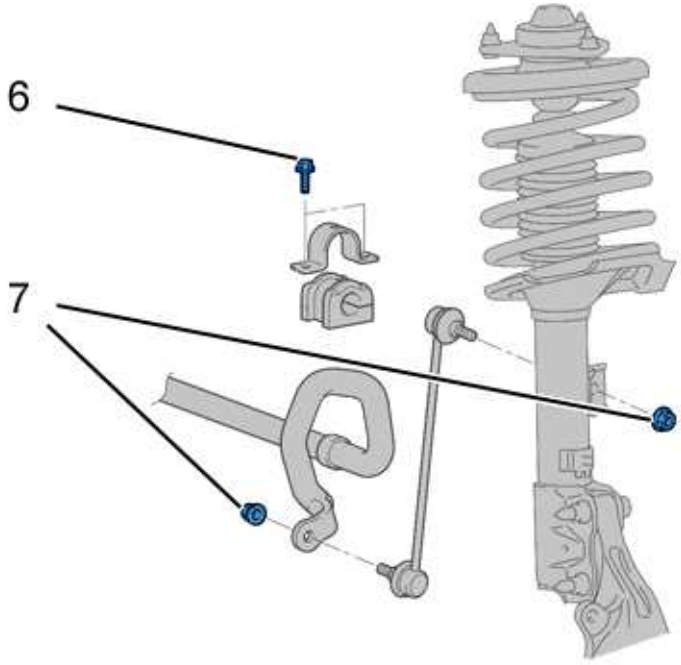

b3bm01md

Reference	Designation	Tightening torque
(6)	bolts - Anti-roll bar bearings	3,1 daNm
(7)	Fixing of anti-roll bar rod	3,9 daNm

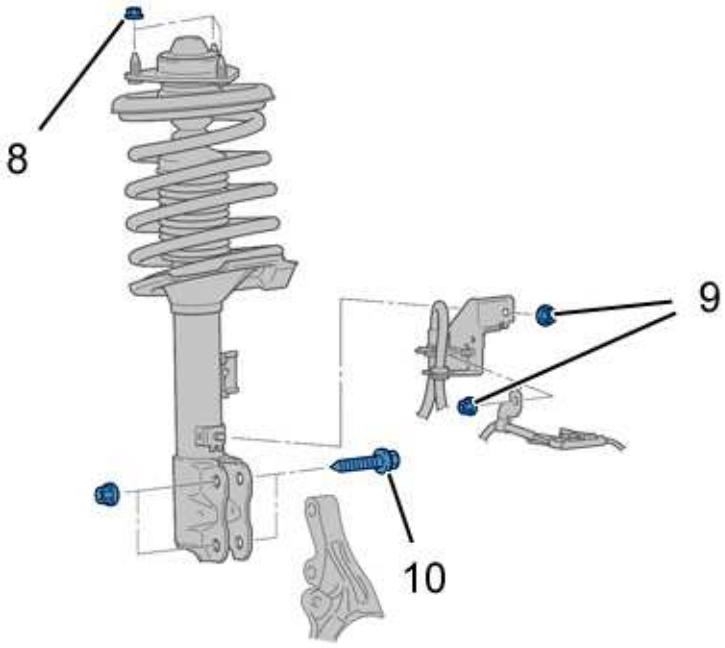

b3cb056d

Reference	Designation	Tightening torque
(8)	Suspension leg fixing	4,5 daNm
(9)	securing nut	1,3 daNm
(10)	pivot to suspension leg clamp	11 daNm

DISMANTLING - RE-ASSEMBLY : ANCILLARIES BATTERY

ESSENTIAL : Observe the safety and cleanliness recommendations

1 - REMOVING

Switch off the ignition.

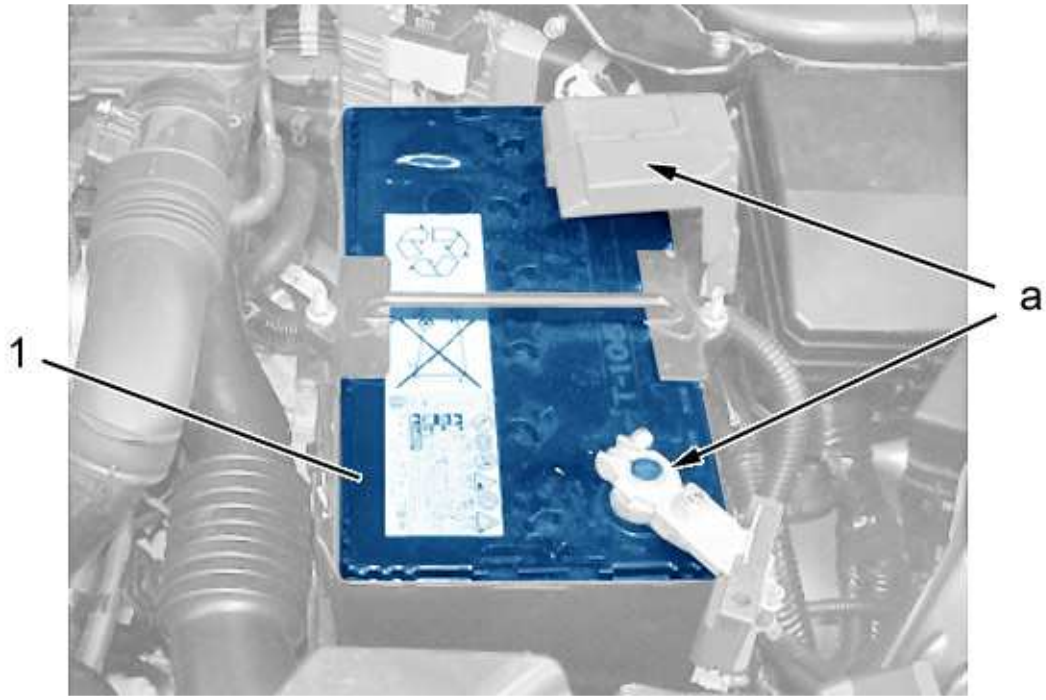

d1ak080d

WARNING : Protect the positive terminal of the battery ; With a plastic cap

Disconnect the terminals of the ancillaries battery (1) (at "a").

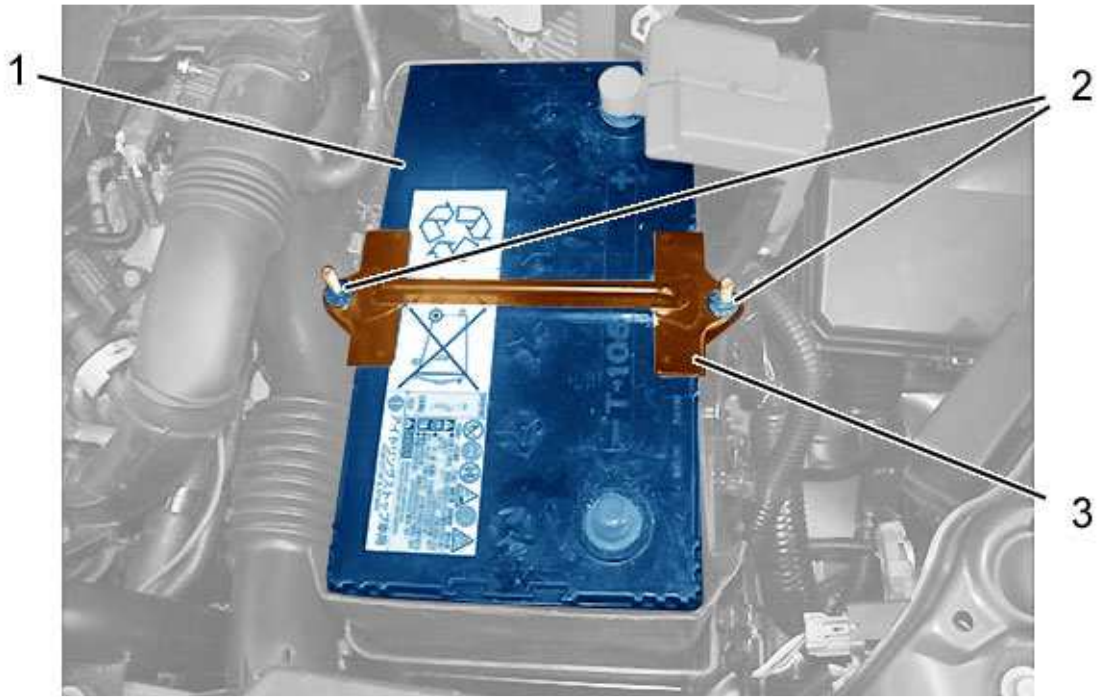

d1ak081d

Loosen the 2 nuts (2) without removing them.

Remove :

- The fixing lugs (3)
- The ancillaries battery (1)

2 - REFITTING



d1ak082d

> **WARNING :** Take care with the positioning of the fixing lugs (3)

Refit :

- The ancillaries battery (1)
- The fixing lugs (3)

Tighten the 2 nuts (2).

> **WARNING :** Perform the operations that are required following a reconnection of the ancillaries battery

Reconnect the ancillaries battery terminals (at "a").

DISMANTLING - RE-ASSEMBLY : ENGINE ECU

ESSENTIAL : Observe the safety and cleanliness recommendations

WARNING : Before adding or replacing any parts, ensure that the customer has not lost their confidential card (According to equipment)

1 - LOCATION

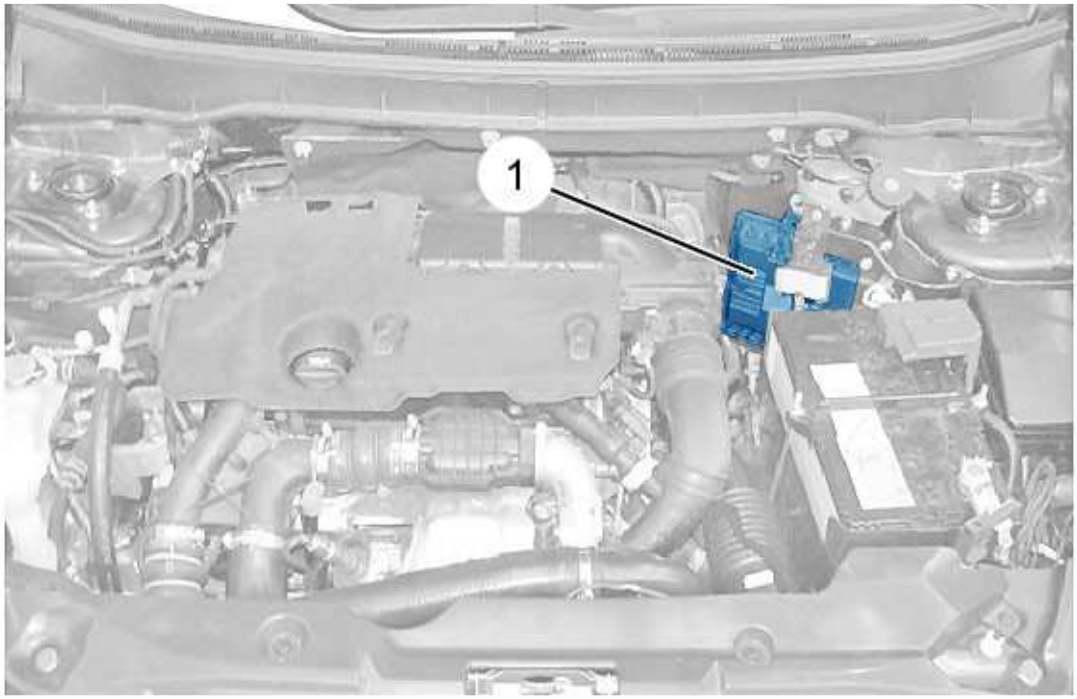

b1hg3vmd

(1) Engine ECU.

2 - REMOVING

Disconnect the ancillaries battery.



b1hg3vod

Remove :

- The bolt (2)
- The pre-heating relay (3)

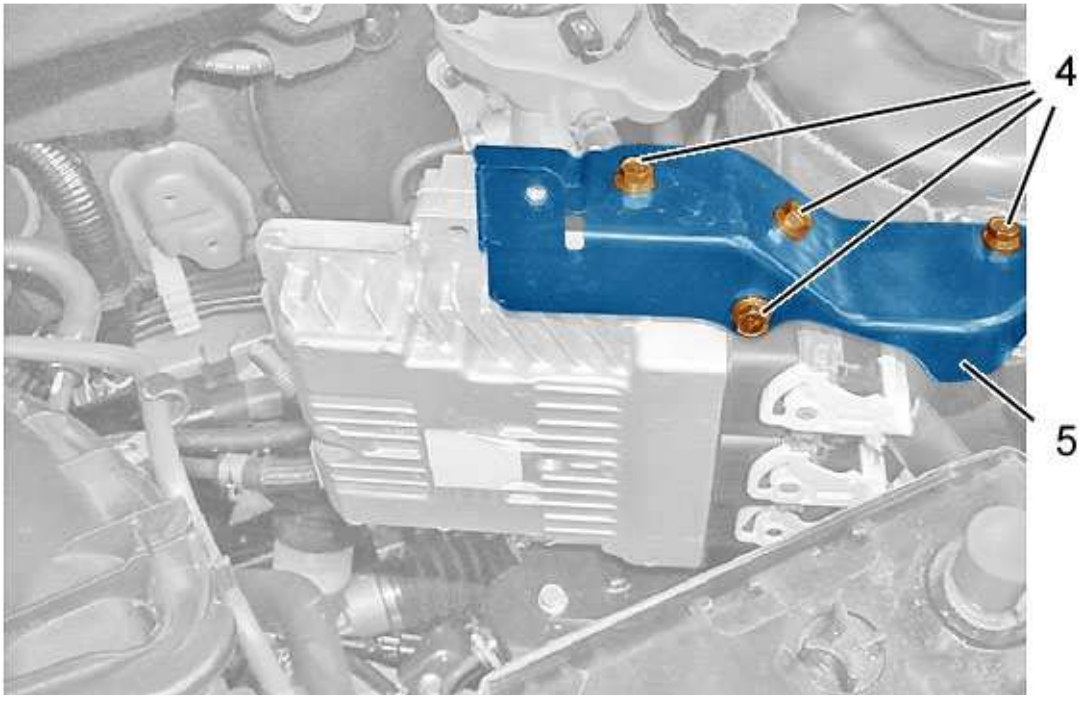

b1hg3vpd

Remove :

- The 4 bolts (4)
- The bracket (5)

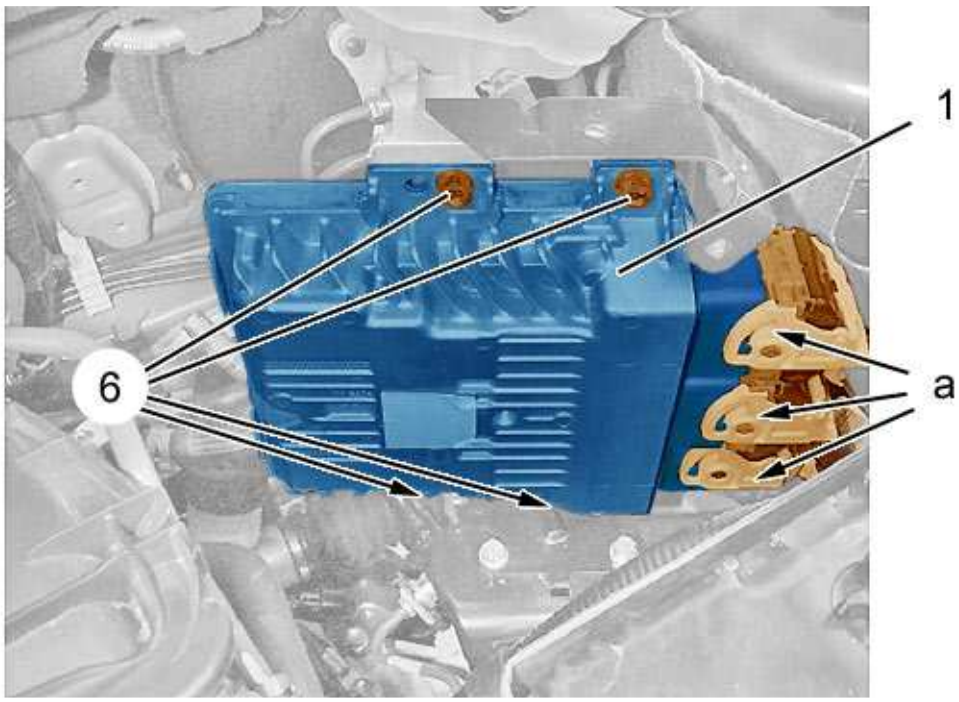

b1hg3vqd

Disconnect the 3 connectors (at "a").

Remove :

- The 4 bolts (6)
- The engine management ECU (1)

3 - REFITTING

Refit :

- The engine management ECU (1)
- The 4 bolts (6)

Connect the connectors (at "a").

Refit :

- The bracket (5)
- The 4 bolts (4)
- The pre-heating relay (3)
- The bolt (2)

> **WARNING :** Perform the operations that are required following a reconnection of the ancillaries battery

Reconnect the ancillaries battery.

4 - OPERATIONS TO BE PERFORMED : AFTER REPLACING THE ENGINE MANAGEMENT ECU

> **WARNING :** Always carry out the following operations after replacing an ECU

> **WARNING :** Swapping an engine ECU between two vehicles results in it being impossible to start either vehicle

When changing an engine ECU (1), it is necessary to use the diagnostic tool to run the procedure for replacing an engine ECU (1) from the "replacement parts" menu.

Conditions to be met to carry out the procedure :

- Be in possession of the access code to the built-in systems interface (written on the customer's confidential card) (According to equipment)
- Be in possession of a new engine ECU (1)
- Use the diagnostic tool

5 - ENGINE MANAGEMENT ECU DOWNLOADING

Updating of the software of the engine ECU (1) is by downloading (ECU fitted with a flash EPROM).

> **NOTE :** This operation is performed using diagnostic equipment

Perform the downloading of the engine ECU (1) (If necessary).

6 - PROCEDURES FOR RETURNING UNDER WARRANTY

Disconnecting the engine ECU (1) automatically locks it up.

> **WARNING :** If returning the component under warranty, return the engine ECU (1) together with the access code

DISMANTLING - RE-ASSEMBLY : AIR CONDITIONING COMPRESSOR

ESSENTIAL : Observe the safety and cleanliness recommendations

ESSENTIAL : Before carrying out any work on the air conditioning circuit, take the necessary precautions

WARNING : Do not remove the pipe plugs, clamps or unions until carrying out the connection to vehicle

1 - REPLACEMENT OF PARTS IN ALL CASES

Designation	Quantity
Seals (Air conditioning fluid pipes)	2

2 - TOOLING

Equipment : Filling and recycling equipment .

tool	Reference	Designation
[1701-HZ]  *e5ad00zt*	[1701-HZ]	Air conditioning circuit protection plugs

3 - REMOVING

Disconnect the ancillaries battery.

Drain the air conditioning circuit ; Using the charging station .

Remove :

- The protective panel under the engine
- The front bumper deflector

WARNING : Plug all the piping quickly to prevent the entry of moisture ; Using the tools [1701-HZ]

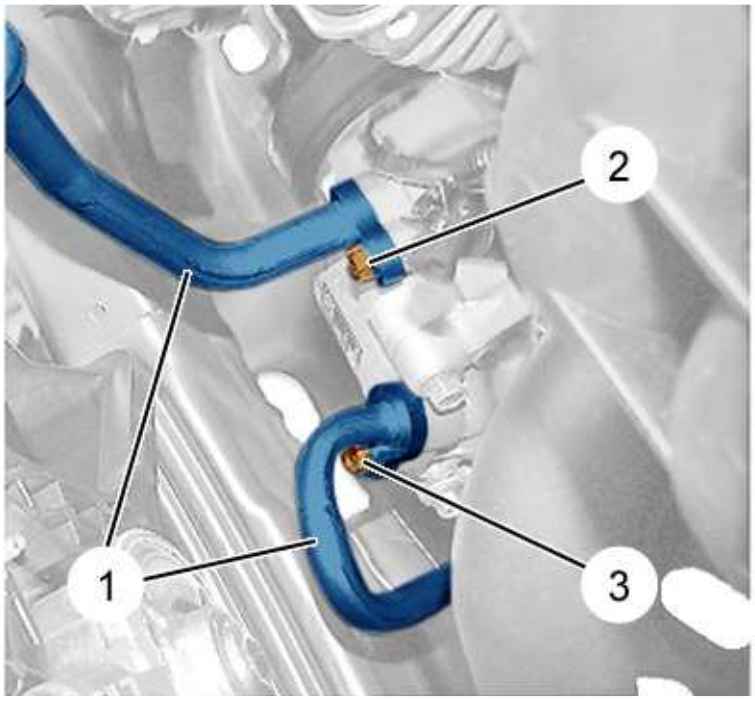

c5hg1dwd

Remove the 2 bolts (2), (3) of the aircon fluid pipes (1) on the air conditioning compressor .

Uncouple the refrigerant ducts (1).

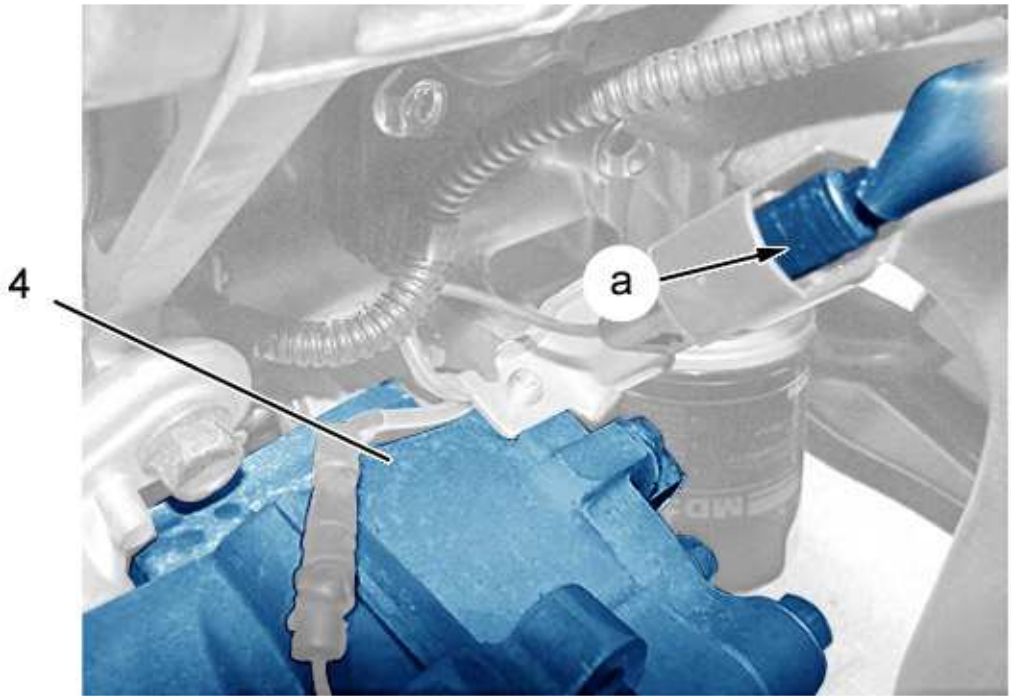

c5hg1dxd

Remove the accessories drive belt .

Disconnect the air conditioning compressor (4) connector (at "a").

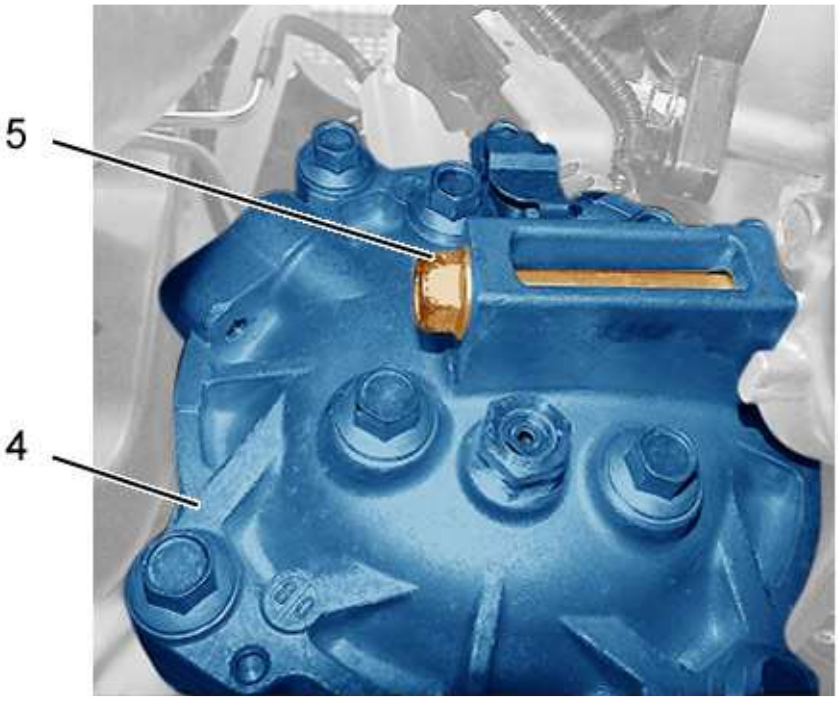

c5hg1dyd

Remove the bolts (5) fixing the air conditioning compressor (4).



c5hg1dzd

Remove :

- The 2 air conditioning compressor (4) fixing bolts (6)
- The air-conditioning compressor (4)

WARNING : Drain the air conditioning compressor (4) ; Measure the quantity of oil recovered

4 - REFITTING

WARNING : Observe the tightening torque values

WARNING : Never fit an air-conditioning compressor that has suffered an impact

WARNING : Check the cleanliness of the refrigerant pipes (1) upstream and downstream of the air conditioning compressor (4)

WARNING : Put in place new O-ring seal ; Oil the seals with air conditioning compressor oil

WARNING : Drain the new air-conditioning compressor ; Put in the quantity of oil measured at removal

Refit :

- The air-conditioning compressor (4)
- The 3 air conditioning compressor (4) fixing bolts (5), (6)

Reconnect the air conditioning compressor (4) connector (at "a").

Couple up the refrigerant ducts (1) (Fit new O-ring seals).

WARNING : The air conditioning pipes (1) clamp must be in contact with its interface before tightening the bolts (2), (3)

Refit :

- The 2 bolts (2), (3) of the aircon fluid pipes (1) on the air conditioning compressor (4)
- The accessories drive belt

Using the charging station :

- Vacuum drain the air conditioning system (For 15 minutes minimum)
- Check the sealing (Refrigeration system)

Refit :

- The protective panel under the engine
- The front bumper deflector

SPECIAL FEATURE :

FOR : 1CMJ - DRE07 : AUTOMATIC AIR CONDITIONING

FOR : 1CMJ - DRE01 : SINGLE AIR CONDITIONING

Using the charging station :

- Vacuum drain the air conditioning system (For 35 minutes minimum)
- **Charge the air conditioning circuit**

WARNING : Vehicle equipped with "stop and start" ; See corresponding method

WARNING : Perform the operations that are required following a reconnection of the ancillaries battery

Reconnect the ancillaries battery.

WARNING : When the air conditioning compressor (4) starts up for the first time, do not exceed 1500 rpm during the first minute in order to distribute the oil in the air conditioning system

Check the operation of the air conditioning.

PRECAUTIONS TO BE TAKEN : WORK ON THE AIR CONDITIONING CIRCUIT

1 - SAFETY RECOMMENDATIONS

> **ESSENTIAL :** Always observe the general precautions

Wear gloves and protective goggles to avoid the risk of frostbite.

Do not handle the refrigerant near a flame or very hot object (e.g. cigarette) to avoid any risk of the emission of toxic vapours.

Work in a ventilated area.

Handle used compressor lubricating oil with care as it can contain acids.

> **ESSENTIAL :** The compressor lubricant is very hygroscopic ; Use new lubricant after repairs

2 - PRECAUTIONS TO BE TAKEN WHEN OPENING THE CIRCUIT

Plug all the conduits quickly to prevent the entry of humidity ; Using the set of plugs [1701-HZ].

New parts should be at ambient temperature before unpacking to avoid condensation.

The plugs in the component unions must be removed at the last moment before fitting.

> **WARNING :** Avoid fitting parts which are not fitted with plugs

The filtering and drying cartridge must not remain in the open air for more than 5 minutes, even if it is connected to the circuit (risk of saturation with humidity).

If the circuit is left in open air, it is necessary to replace :

- The filtering and drying cartridge
- The compressor oil (operation which is part of the refrigerant changing operation: consult the instructions for use of the approved stations)

3 - PRECAUTIONS TO BE TAKEN CHECK THE ELECTRICAL OPERATION OF THE EQUIPMENT

3 - 1 - General

Handle the air conditioning compressors carefully :

- Do not hold the air conditioning compressor by the connectors or the pulley
- Do not place the air conditioning compressor on the pulley

- Avoid impacts on the pulley and connectors (fragile areas)
- Do not put air conditioning compressor oil or other lubricant on the clutch of the compressor

The air conditioning compressors must be stored in enclosed premises, between 5°C et 50°C.

The plastic plugs delivered with the new air conditioning compressor can be reused later.

If an air conditioning compressor is returned to the supplier, pack the compressor correctly to prevent any damage during transport.

> **WARNING :** When the air conditioning compressor is started for the first time, do not exceed 1500 rpm for the first minute in order to distribute the oil in the air conditioning circuit

3 - 2 - Special features : Air-conditioning compressor without clutch (DENSO)

The "DENSO" compressors without clutch operate continuously while the engine is running.

> **WARNING :** Do not operate the compressor (and consequently the engine) without refrigerant in the air conditioning circuit and above all under vacuum extraction

If it is necessary to run the engine without there being any refrigerant in the air conditioning circuit :

- The air conditioning must be switched off
- The speed of the air conditioning compressor must be less than 2000 rpm for a maximum duration of 15 minutes

> **WARNING :** If these precautions cannot be complied with, replace the air conditioning compressor

4 - PRECAUTIONS TO BE TAKEN WHEN FITTING UNIONS

Use only new seals.

> **WARNING :** Lubricate the seals with compressor oil

Tighten the unions to the specified torque using a second spanner whenever possible.

5 - GENERAL PROTECTION OF THE CIRCUIT

> **WARNING :** Never switch on the air conditioning system if the refrigerant circuit is drained. Do not remove the compressor filler plug when the circuit is full

6 - ELECTRICAL CHECKS

Before re-connecting a connector, check :

- The condition of the various contacts (distortion, corrosion ...)
- The presence of the seal
- The presence and condition of the connector locking mechanism

During electrical checks :

- The ancillaries battery must be correctly charged up
- Never use a voltage source greater than 12 V
- Never use a test lamp
- Do not produce sparks

Do not disconnect :

- The ancillaries battery when the engine is running
- The ECU with ignition on

> **ESSENTIAL :** For the refrigerant draining/refilling operation : Consult the approved equipment instructions

CHECKING : AIR CONDITIONING COMPRESSOR

ESSENTIAL : Prior to any repair on the air conditioning circuit ; Observe the precautions to be taken

1 - TOOLING

Equipment : Recovery/filtering/vacuum extraction/charging equipment.

tool	Reference	Designation
[EXXO-CLIM]  *e5ab0n9t*	[EXXO-CLIM]	Air conditioning circuit pressure checking kit
[1701-HZ]  *e5ad00zt*	[1701-HZ]	Set of plugs

2 - AIR CONDITIONING COMPRESSOR CHECK

WARNING : Before carrying out any work on the air conditioning compressor, top up the air conditioning circuit charge. If the air conditioning circuit failure persists : Make the following checks

2 - 1 - Preliminary check

Visual check - Air conditioning compressor :

- Check that the frame has not suffered any knocks and that it is not distorted
- Check that the pulley has not suffered any knocks or bangs
- Check that the clutch engages when the coil is supplied with 12V
- Verify the condition of : Supply cable- connector
- Check that the body of the air conditioning compressor is not cracked (at the air conditioning

compressor fixing points)

- Check that the air conditioning compressor intake and discharge ports are not damaged

Fault : Noise		
Symptoms	Possible causes	Solutions
Air conditioning compressor noise)	Pulley ball bearing damaged	Replacement of the pulley
	Knock to the drive plate (Contact between drive plate and pulley)	Replacement of the drive plate and if necessary of the pulley
Considerable operating noise (Clutch engaged)	Gas charge too high	Observance of the specification when filling the air conditioning circuit
Operating noise and vibration in the passenger compartment	Air conditioning loop pipes in contact with other components of the vehicle	Check that there is no fouling of the pipes
Noise generated by the slipping of the air conditioning clutch	Presence of oil or grease at the clutch	Check : The cleanness of the air conditioning compressor drive plate and pulley
Intermittent or permanent prolonged knocking	Presence of foreign particles under the intake or discharge valves	Check the cleanliness of the pipes before and after the components of the air conditioning circuit

Operating fault		
Symptoms	Possible causes	Solutions
The clutch does not engage when the air conditioning is activated	Bad contact at the connectors	Check : The connections
	Incorrect supply	Check whether the supply on the engine harness side is 12V ; No over-voltage, no excess current
The clutch engages, but no cold air is produced	Abnormal air conditioning circuit charge	Check : Refrigerant gas charge

2 - 2 - Check using the [EXXO-CLIM] kit

Check the air conditioning compressor ; Using the tool [EXXO-CLIM].

NOTE : See instructions for use

2 - 3 - Checking the oil level

WARNING : The compressor lubricant is extremely hygroscopic, use new fluid for any operation

2 cases to be distinguished :

- If the residual pressure in the circuit is greater than 0, then it's a matter of operating on the air conditioning circuit without moisture ingress (No leak or slow leak)
- If the residual pressure in the circuit is zero, then it's a matter of operating on the air conditioning circuit with moisture ingress (Long opening of the air conditioning circuit)

2 - 4 - Operation on the air conditioning circuit without moisture ingress

Use of filling and recycling equipment which is not fitted with an oil trap :

- Drain the low pressure fluid circuit as slowly as possible to prevent the compressor oil from being drawn out of the system
- The circuit is filled with refrigerant without the addition of oil

Use of filling and recycling equipment fitted with an oil trap :

- Drain the refrigerant circuit conforming to the instructions in the equipment's manual
- Measure the quantity of oil recovered
- Add the same quantity of oil as that recovered

2 - 5 - Operation on an air conditioning circuit with moisture ingress

This type of incident causes a loss of oil as well as allowing air into the system.

Perform the following operations :

- Replace the filtering and drying cartridge, or the condenser if the filtering cartridge is integral to it
- Evacuate the maximum amount of oil possible (when replacing the faulty component)

Before or during the R134.a refrigerant refilling process, introduce 30 cc of new oil into the system.

3 - REPLACEMENT OF THE COMPONENTS OF THE AIR CONDITIONING CIRCUIT

3 - 1 - Compressor

Remove the compressor.

Drain the compressor oil.

Measure the quantity of oil recovered.

Drain the new compressor (supplied filled with oil) to leave the same quantity of oil as drained from the original.

The fluid circuit can be refilled without adding oil.

3 - 2 - Components of the air conditioning circuit (Except compressor)

When filling the circuit with refrigerant, add the quantity of oil which corresponds to that contained by the replaced component.

Component replaced	Add the exact quantity of oil
Cooling condensor	15 cc
Air conditioning evaporator	25 cc
Low pressure pipe	5 cc
High pressure pipe	5 cc

4 - DRAIN AND REFILL - REFILLING : AIR CONDITIONING COMPRESSOR

NOTE : Operations to be carried out (After removing the air conditioning compressor)

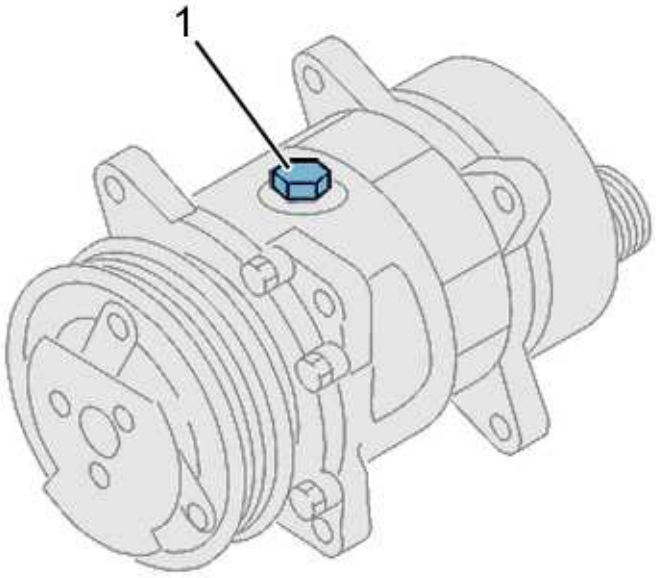

c5hp1g9d

Remove the drain plug (1).

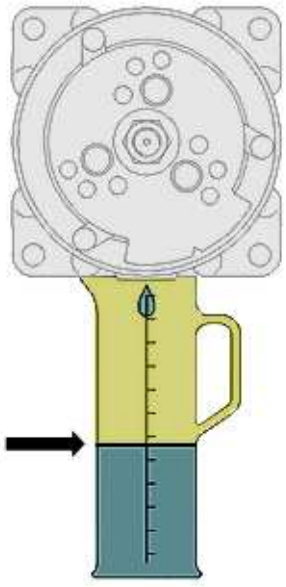

c5hp1gad

Turn the compressor over and allow the oil to flow out of the compressor.

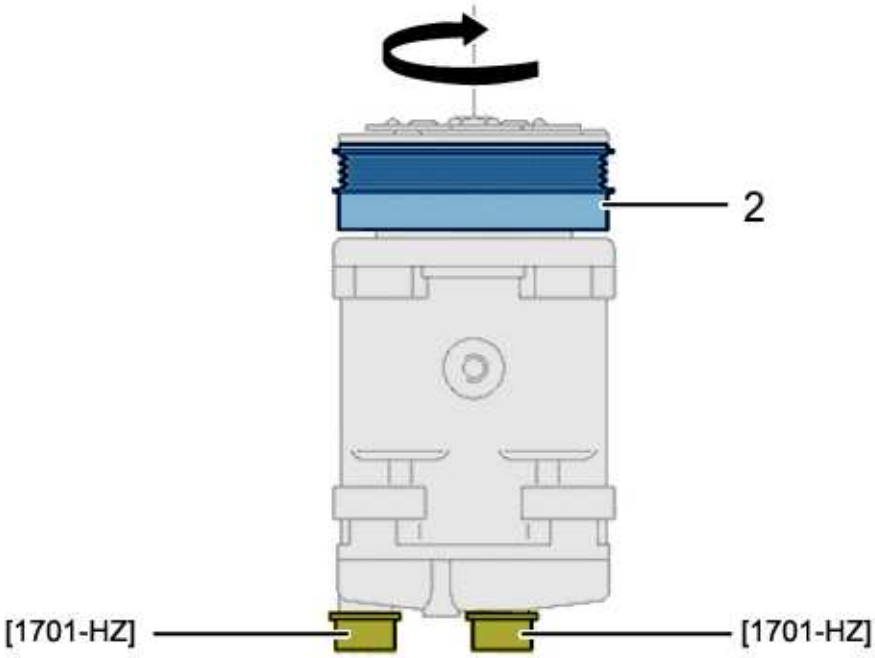

c5hd00dd

Fit plugs [1701-HZ] on the compressor inlet and outlet .

Position the compressor vertically (compressor clutch upwards).

Turn the assembly (2) through ten turns (oil flows into the cylinder head).



c5hp1gcd

Remove the plugs [1701-HZ].

Allow oil to flow out.

Measure the quantity of oil recovered.

Compare the total of oil recovered with the quantity recommended by the manufacturer.

> **NOTE :** A variable amount of oil remains trapped in the compressor (depending on compressor type)

Add the same quantity of oil as that recovered (filler neck).

Refit the drain plug (1) (new oiled seal and clean surfaces).

Tighten the drain plug (1) to 2 daN.m.

Refit the compressor inlet and outlet plugs [1701-HZ] (if working on the cold loop).

TIGHTENING TORQUES : COMPONENTS OF THE AIR CONDITIONING CIRCUIT

1 - AIR CONDITIONING SYSTEM

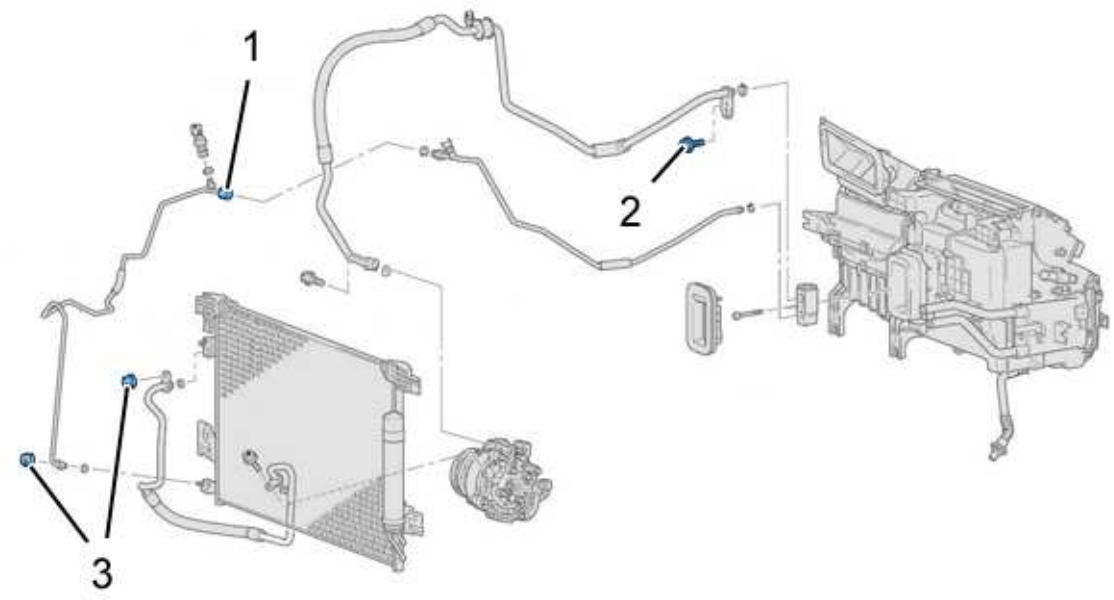

c5hb059d

Components	Designation	Tightening torque
(1)	Union (High-pressure refrigerant hose)	1,3 daNm
(2)	bolts (Air conditioning fluid piping / Pressure relief valve)	0,49 daNm
(3)	bolts (Air conditioning fluid piping / Condenser)	0,49 daNm

2 - COOLING PRESSURE RELIEF VALVE

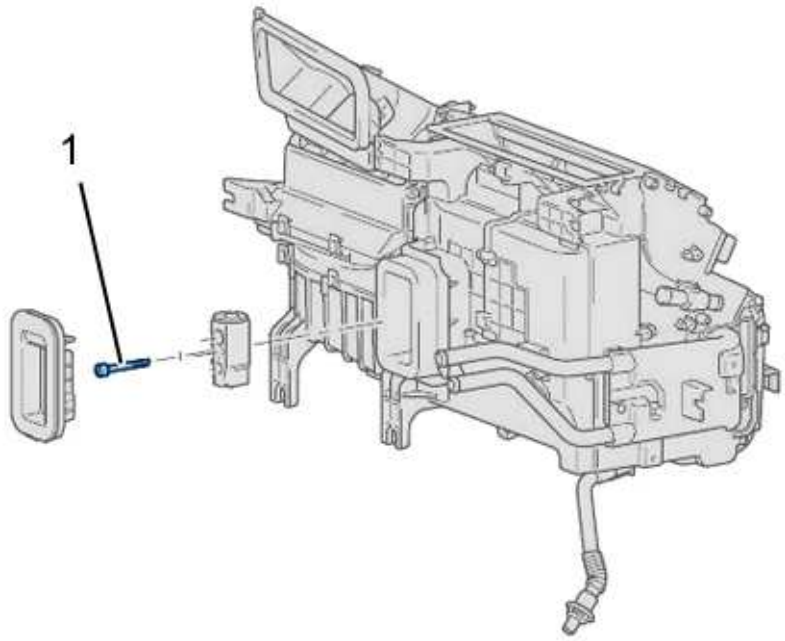

c5hb05ad

Components	Designation	Tightening torque
(1)	bolts (Pressure relief valve)	0,6 daNm

3 - AIR CONDITIONING COMPRESSOR

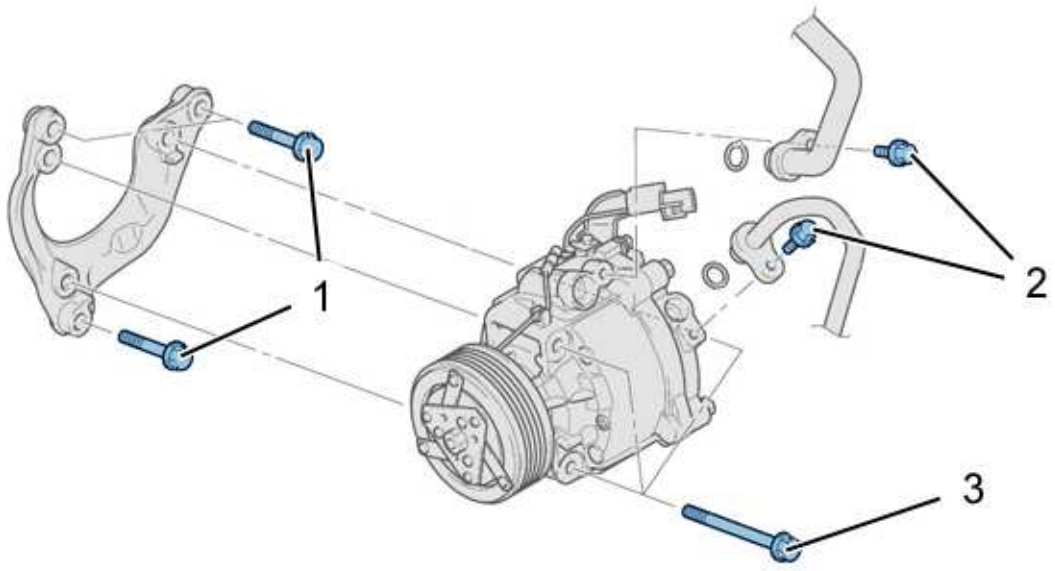

c5hb05bd

Components	Designation	Tightening torque

(1)	bolts (Compressor bracket / Engine)	2,3 daNm
(2)	bolts (Air conditioning fluid piping / air conditioning compressor)	1 daNm
(3)	bolts (Compressor / Bracket) (*)	2,3 daNm
(*) : Follow the tightening sequence		

4 - SEQUENCE OF TIGHTENING THE BOLTS (3)

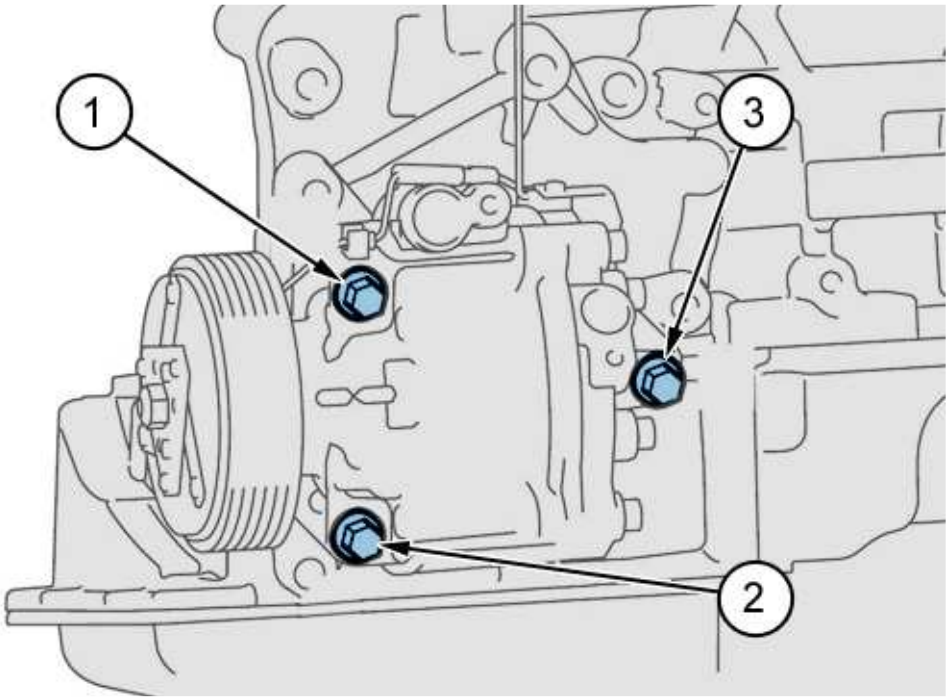

c5hb05cd

CAPACITIES : AIR CONDITIONING SYSTEM

1 - REFRIGERANT R134A

Vehicle	engine	RPO number	Refrigerant charge (in grammes)
CITROËN C-ZERO	-	-	325
CITROËN C1 (B0)	384F	-	450
	DV4TD	-	500
CITROËN C1 (B4)	all models	-	400
CITROËN C2	all models	Prior to RPO No. 10041	625
	all models Europe	From RPO number 10042	500
	all models Mercosur		600
CITROEN C2 CHINA	all models	-	700
CITROËN C3 (A8)	Manual transmission - 5 gears (BVM 5)	-	450
	Automatic transmission - 4 gears (AL4)	-	400
CITROËN C3 PLURIEL	all models	Prior to RPO No. 10041	625
	all models Europe	From RPO number 10042	500
	all models Mercosur		600
CITROËN C3 (A31)	EV / DV	-	450
	TU / TUD (AL gearbox)		
	TU / TUD (Except AL gearbox)	-	500
CITROËN C3 (AI31) Mercosur	TU3 (Manual gearbox)	-	450
	TU5 (Manual gearbox)	-	
	TU5 (Automatic gearbox)	-	400
CITROËN C3 (A5)	all models	-	425
CITROËN C3 (Ai51) Mercosur	TU4	-	425
	EC5	-	
DS3 (A55)	all models	-	425
CITROËN C3 PICASSO	all models	-	450
CITROËN C3 PICASSO Mercosu	TU4 (Manual gearbox)	-	450
	EC5 (Automatic gearbox)	-	
	EC5 (Manual gearbox)	-	500

CITROËN C3 AIRCROSS Mercos	TU4 (Manual gearbox)	-	450
	EC5 (Automatic gearbox)	-	
	EC5 (Manual gearbox)	-	500
CITROËN C-ÉLYSÉE	all models	-	425
CITROËN C-ÉLYSÉE China	all models	-	450
CITROEN C3-XR China (M44)	all models	-	450
CITROËN C4 (B5)	DV6TED4 and DW10BTED4 - RAS : Turbocharger air cooler (LH side)	Prior to RPO No. 10553	670
	All types except DV6TED4 and DW10BTED4 - RAS : Turbocharger air cooler (LH side)	Prior to RPO No. 10553	450
	all models	From RPO number 10554	
	China	-	600
CITROËN C4 Mercosur	EW10	-	500
	TU5	-	
	DV6	-	
CITROËN C4 Lounge Mercosur	EW10	-	425
	DV6	-	
	EP6CDTM	-	
CITROËN C4 (B7)	all models	-	425
CITROËN C4 PICASSO (B78)	All models except "Very hot climate" countries	-	450
	All models "Very hot climate" countries	-	625
CITROËN C4 PICASSO (B78C) China	all models	-	600
DS4 (B75)	all models	-	425
CITROËN C4 (B73) China	all models	-	450
CITROËN C4 L Russia	all models	-	475
	TU5JP and EW7J4	Prior to RPO No. 09463	675
		From RPO number 09464	650
		Prior to RPO No.	775

CITROEN XSARA PICASSO	EW10J4	09463	
		From RPO number 09464	650
	DW10TD	Prior to RPO No. 09463	675
		From RPO number 09464	650
	DV6TED4	-	625
CITROËN XSARA PICASSO II Mercosur	TU5	-	775
	EW10	-	
CITROËN C4 PICASSO (B58)	all models	-	450 (1)
		-	675 (2)
DS5 (B81)	all models	-	450
DS5 (B8C) China	all models	-	525
DS5 LS	EP6CDTM and EC8	-	450
DS5 LS	EP6CDTX	-	525
DS 6	EP6FDTM	-	450
DS 6	EP6CDTX	-	525
CITROËN C5 II (X4)	All types except for DW12B	-	625
	DW12B	-	525
CITROËN C5 (X7)	EURO 4 (except DW10BTED4)	-	625
	EURO 5 (all types) EURO 4 (DW10BTED4)	-	525
CITROËN C5 (XW) China	ES9A	-	525
CITROËN C5 (XW) China	all models (except ES9A)	-	475
CITROEN C6	EURO 4 (except for DW10BTED4, DW12B and DT17)	-	650
	EURO 5 (all types) EURO 4 (DW10BTED4, DW12B and DT17)	-	525
CITROËN C8	Diesel engine	-	540
	Petrol engine version	-	675
CITROËN C4 AIRCROSS	all models	-	500
CITROËN C-CROSSER	all models	-	500
NEMO	all models	-	500
CITROEN BERLINGO	TU3	-	450
	TU5	-	

(M59) Mercosur	DV6	-	
CITROEN BERLINGO (M59)	all models	-	575
CITROEN BERLINGO (B9)	all models (Internal combustion engine)	-	450
	Electrical	-	525
CITROEN DISPATCH II	all models	-	950
CITROEN DISPATCH III	Single loop petrol engine	-	675 (1)
	Single loop diesel engine	-	540 (1)
	Petrol engines - Double loop long body type	-	1075 (2)
	Petrol engines - Double loop short body type	-	950 (2)
	Diesel engines - Double loop long body type	-	950 (2)
	Diesel engines - Double loop short body type	-	850 (2)
CITROEN RELAY II	all models	-	500 (1)
			700 (2)
CITROEN RELAY III	all models (Except minibus)	-	550 (1)
			950 (2)
	Minibus version		2600
(1) Cooling only			
(2) Additional air conditioning			

2 - REFRIGERANT 1234YF

Vehicle	engine	RPO number	Refrigerant charge (in grammes)
CITROËN C4 CACTUS	DV	-	400
	EB	-	425
CITROËN C-ÉLYSÉE	all models	-	450
CITROËN C4 PICASSO (B78)	all models All models except "Very hot climate" countries	-	450
	All models "Very hot climate" countries	-	625

DISMANTLING - RE-ASSEMBLY : FRONT SUBFRAME

ESSENTIAL : Observe the safety and cleanliness recommendations

1 - REPLACEMENT OF PARTS IN ALL CASES

Designation	Quantity
Bolt (Steering column universal joint)	1
Nut (Steering ball joint)	1 (Per side)

2 - TOOLING

Equipment : Component lift.

Tool	Reference	Designation
[0622]  *e5ab0pzt*	[0622]	pivot ball-joint uncoupling lever
[0709] 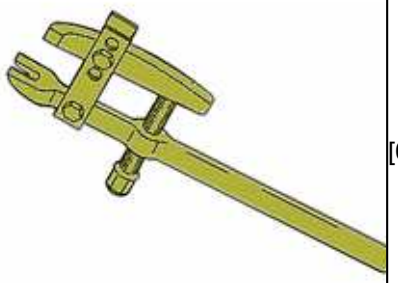 *e5ab0pxt*	[0709]	ball-joint extractor

3 - REMOVING

3 - 1 - Common operations

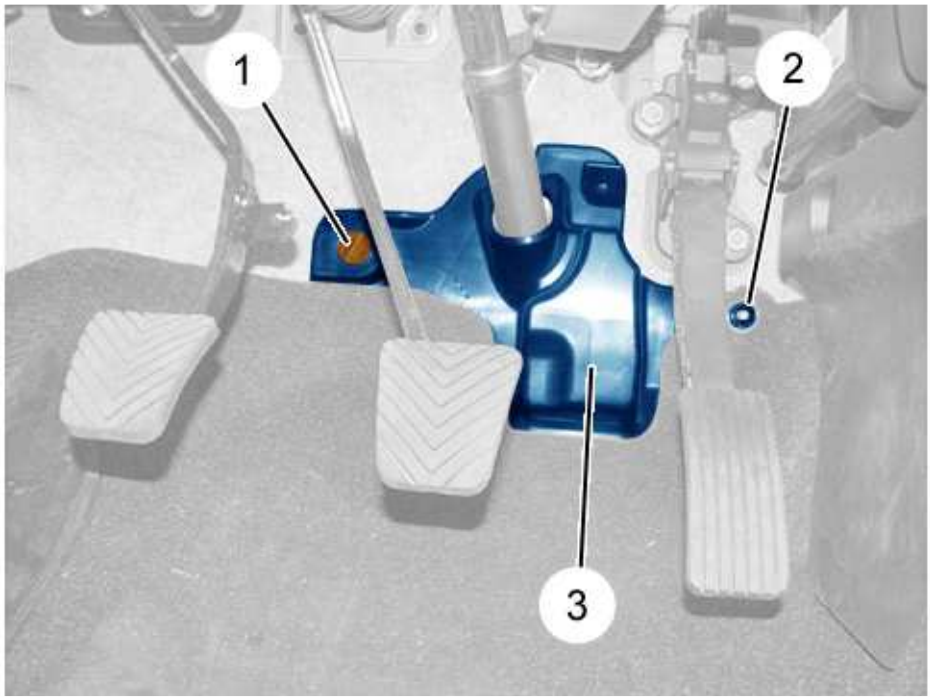

b3cg0c2d

Remove :

- The nut (2)
- The bolt (1)
- The cover (3)



b3cg0c3d

Remove the bolt (4) and its washer.

Precisely mark the angular position of the steering rack pinion in relation to the steering cardan (5).

Lift and support the vehicle.

Remove :

- The front wheels
- The protection plates under the engine

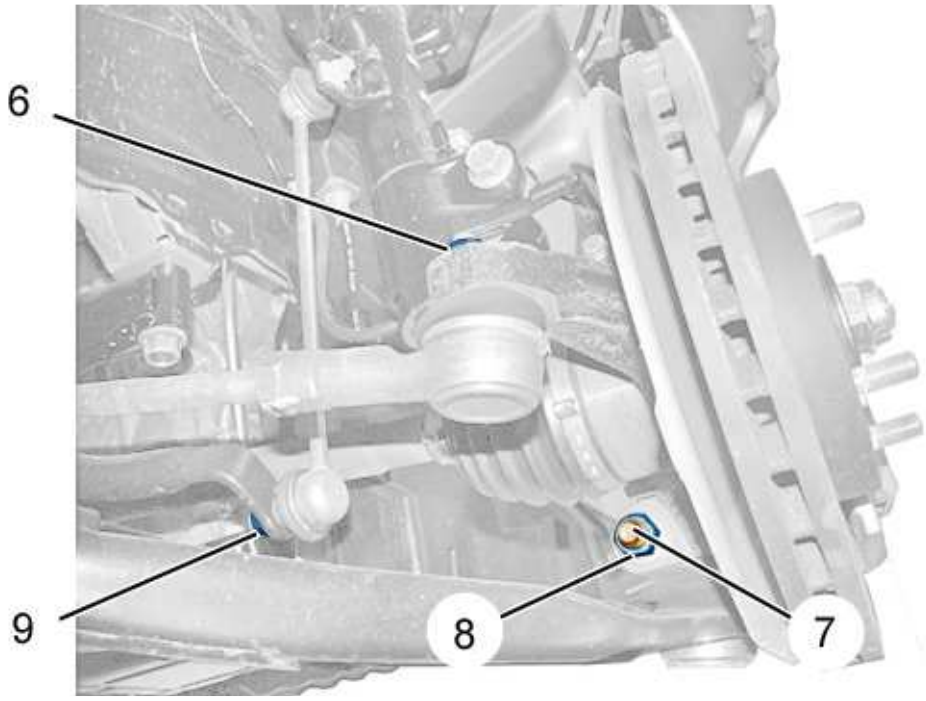

b3cg0c4d

Remove (on each side) :

- The nuts (9), (6), (8)
- The (7) bolt

Uncouple (on each side) :

- The swivel ball-joint ; Using tool [0622]
- The steering ball joint ; Using tool [0709]

3 - 2 - 1.8 HDI version

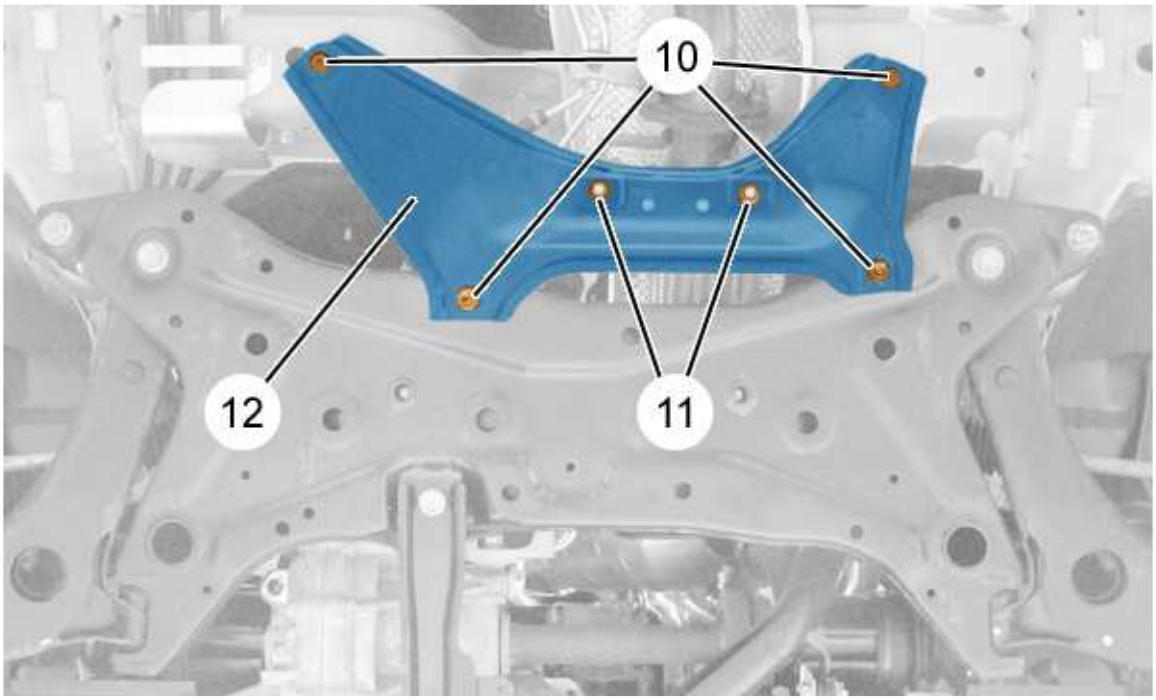

b3cg0c5d

Remove (according to model) :

- The nuts (11)
- The bolts (10)
- The plate (12)

3 - 3 - Common operations (continued)

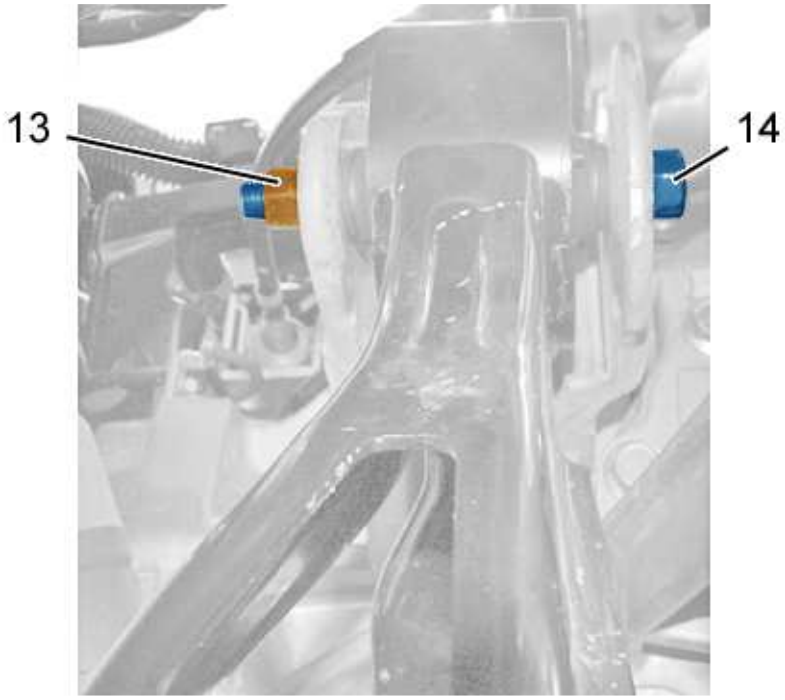

b3cg0c6d

Remove :

- The nut (13)
- The bolt (14) (Rear engine mounting)

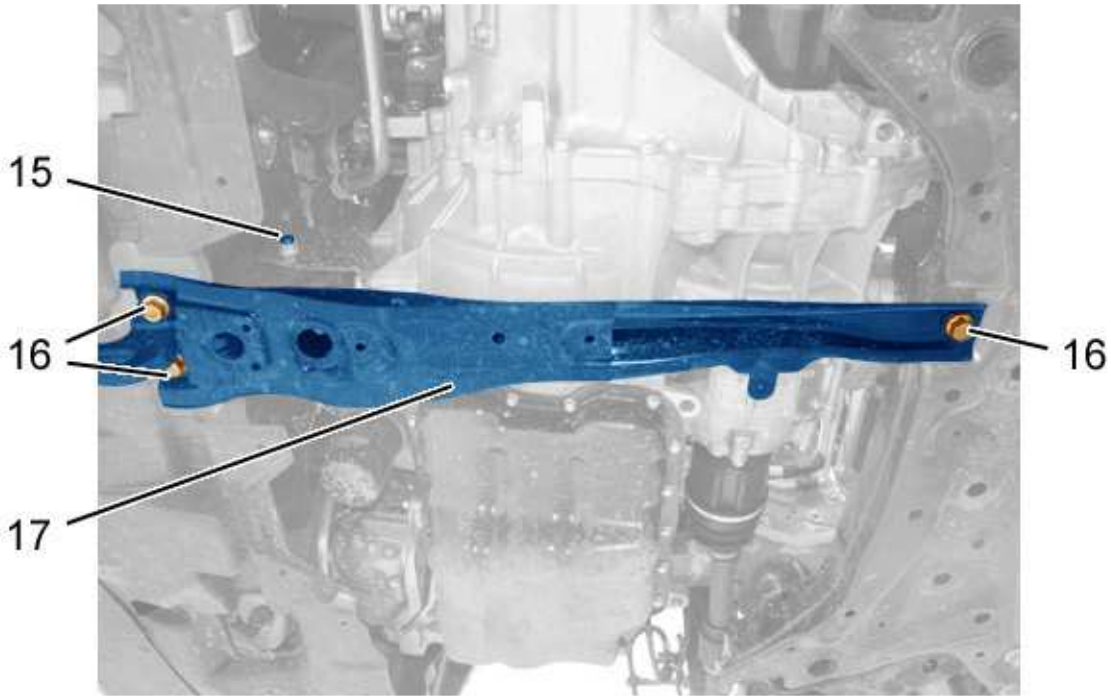

b3cg0c7d

Remove :

- The front bottom support pin (15) (front)
- The nuts (16)
- The front subframe extension (17)

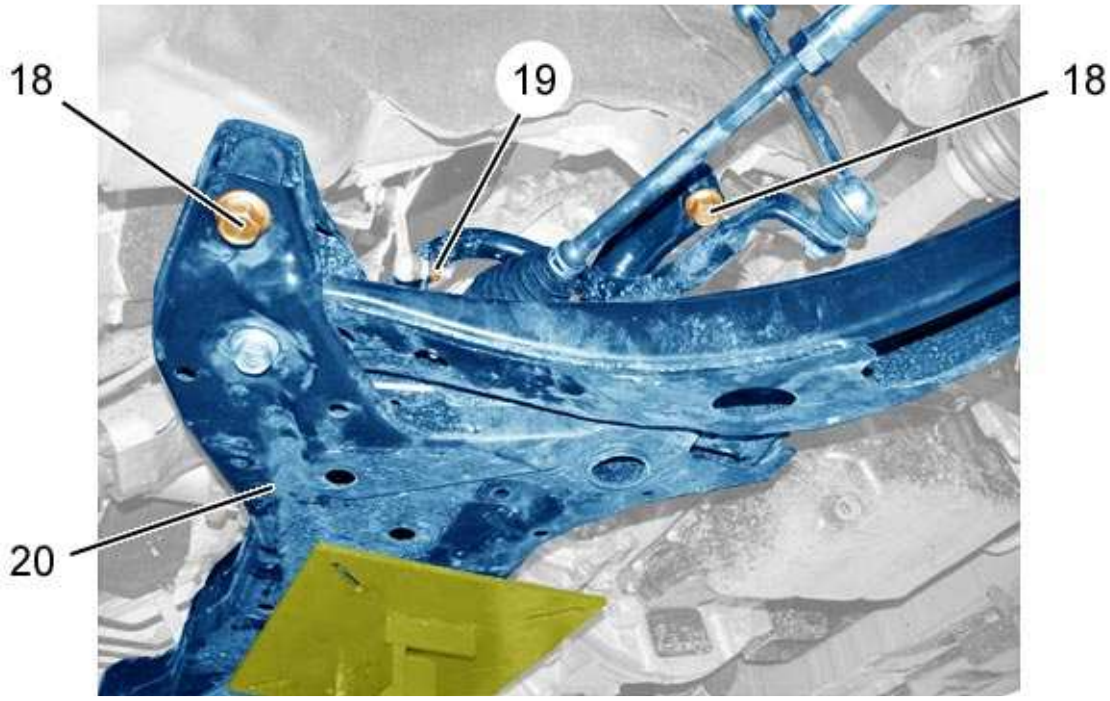

b3cg0c8d

Position a component lift to hold the front subframe.

Remove the nut (19) (according to equipment).

Remove the bolts (18) (on each side).

Move the front subframe (20) a few centimetres away from the body.

Detach the steering universal joint (5).

Remove the front subframe (20).

3 - 4 - Stripping : Front subframe

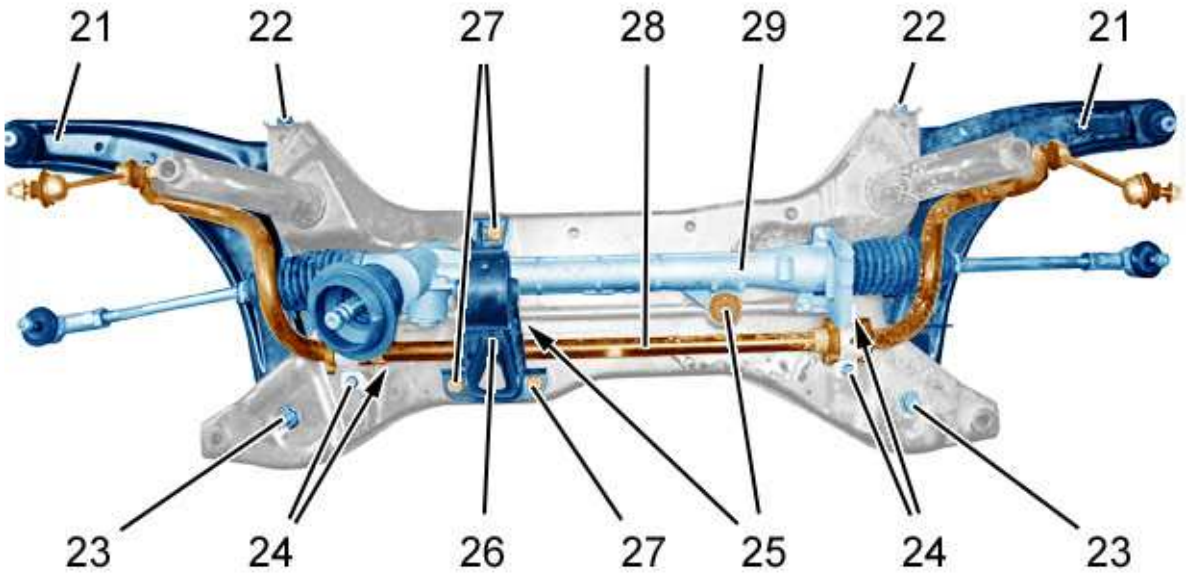

b3cg0c9d

Remove :

- The 3 bolts (27)
- The engine mounting (26) (rear)
- The bolts (24)
- The anti-roll bar (28)
- The 2 bolts (25)
- The steering mechanism (29)
- The bolt/nut assemblies (23)
- The bolts (22)
- The front suspension arms (21)

4 - REFITTING

WARNING : Always fit new Nylstop nuts

WARNING : Adhere to the tightening torques

SPECIAL FEATURE :

FOR : 1CMJ - DCX01 : LEFT-HAND DRIVE

Tightening torques :

- Front suspension
- Road wheels
- Steering

4 - 1 - Re-assembling : Front subframe

Refit :

- The front suspension arms (21)
- The bolts (22)
- The bolt/nut assemblies (23)
- The steering mechanism (29)
- The 2 bolts (25)
- The anti-roll bar (28)
- The bolts (24)
- The engine mounting (26) (rear)
- The 3 bolts (27)

4 - 2 - Common operations

Present the front subframe (20) underneath the vehicle.

Position the front sub-frame (20) under the vehicle a few centimetres from the body ; Using the component lift .

Couple up the steering cardan (5) (respect the marks made on removal).

Refit :

- The front subframe (20)
- The bolts (18) (on each side)
- The nut (19) (according to equipment)
- The front subframe extension (17)
- The nuts (16)
- The front bottom support pin (15) (front)
- The nut (13)
- The bolt (14) (Rear engine mounting)

Move aside the component lift .

Couple up (on each side) :

- The swivel ball-joint
- The steering ball joint

Refit (on each side) :

- The bolt (7)
- The nuts (8), (6), (9)

4 - 3 - 1.8 HDI version

Refit :

- The plate (12)

- The bolts (10)
- The nuts (11)

4 - 4 - Common operations (continued)

Refit :

- The screw (4) and its washer
- The cover (3)
- The bolt (1)

Refit :

- The nut (2)
- The protection plates under the engine
- The front wheels
- The vehicle to its wheels

TIGHTENING TORQUES : POWER STEERING 4X4, 4X2

1 - STEERING COLUMN

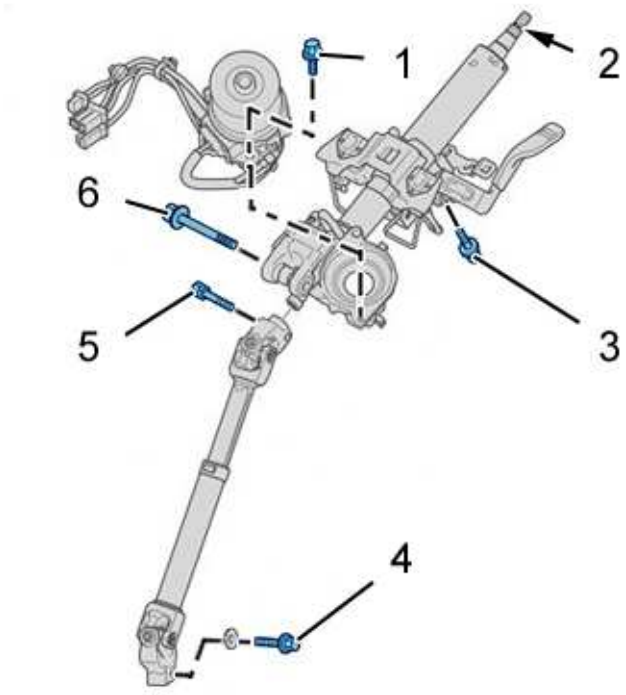

b3eb08kd

Reference	Designation	Tightening torque
(1)	Bolt (Engine / Power steering ECU) (*)	1,9 daNm
(2)	Nut (Steering wheel)	4,4 daNm
(3)	Bolt (Steering column / Bracket)	2,1 daNm
(4)	Bolt (Steering column universal joint) (*)	3,6 daNm
(5)	Bolt (Steering column universal joint) (*)	3,6 daNm
(6)	Bolt (Steering column / Bracket)	5,4 daNm
(*) Always to be replaced whenever removed		

2 - STEERING MECHANISM

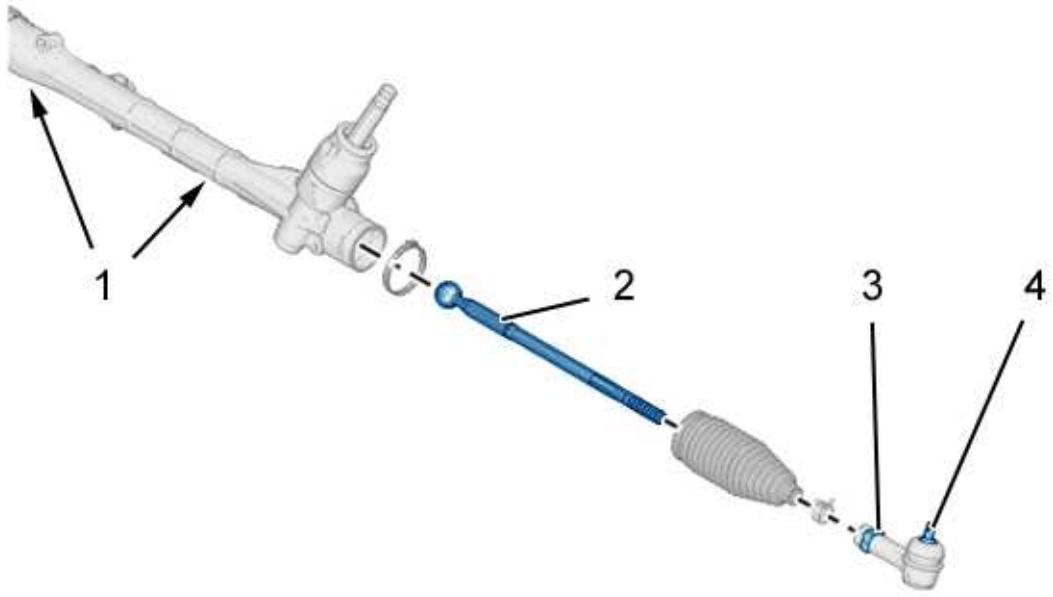

b3eb08ld

Reference	Designation	Tightening torque
(1)	Bolt (Steering mechanism)	7 daNm
(2)	Steering rod	8,4 daNm
(3)	Nut (Steering ball joint)	5,2 daNm
(4)	Nut (Steering ball joint) (*)	2,5 daNm
(*) Always to be replaced whenever removed		

DISMANTLING - RE-ASSEMBLY : EXHAUST SYSTEM

ESSENTIAL : Observe the safety and cleanliness recommendations

1 - TOOLING

Equipment : Component lift.

2 - EXHAUST SILENCER

Put the vehicle on a hoist.

2 - 1 - Removing

ESSENTIAL : Wait at least one hour before carrying out any work on the exhaust line

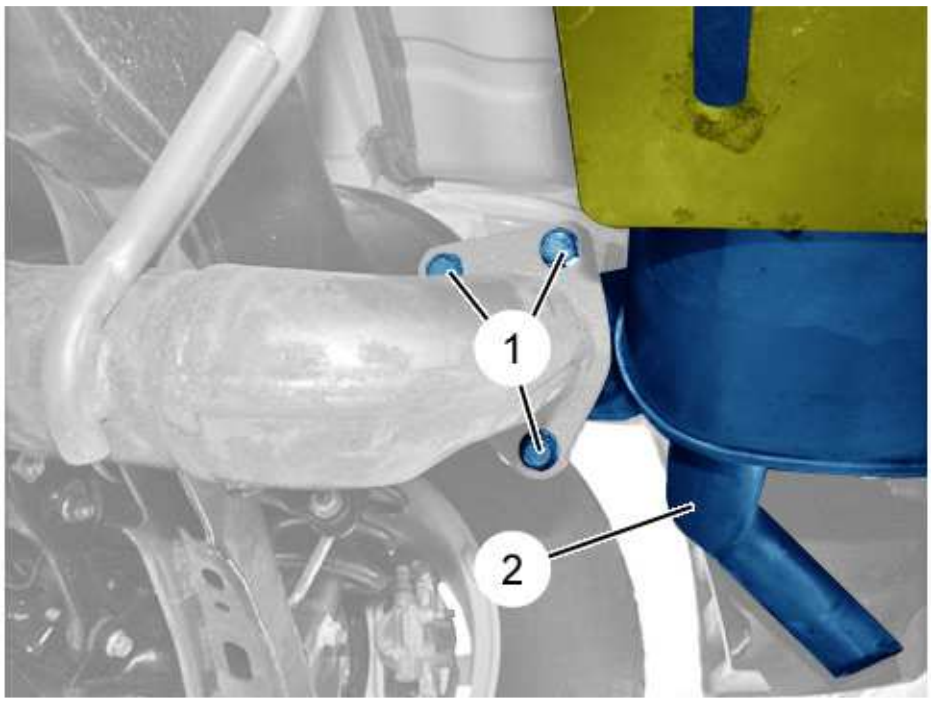

b1jg0o6d

Place the component lift under the exhaust silencer (2).

Remove the 3 bolts (1).

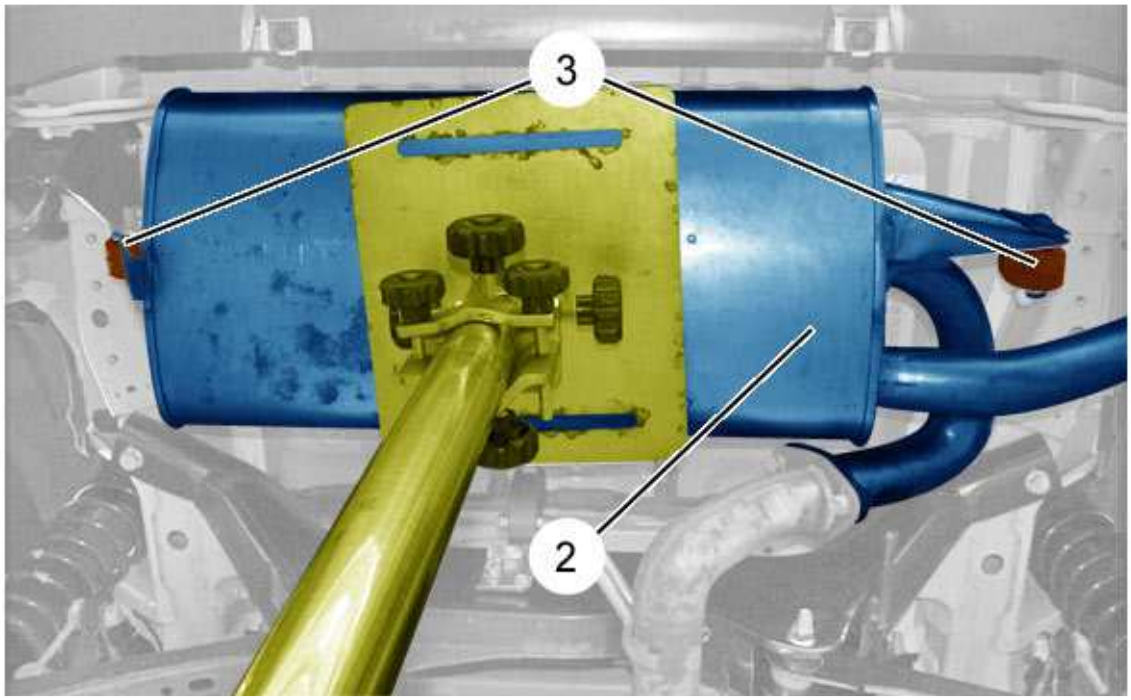

b1jg0o7d

Uncouple the hangers (3) from the silencer (2).

Remove the exhaust silencer (2) ; (with the seal) ; Using the component lift .

2 - 2 - Refitting

WARNING : Adhere to the tightening torques

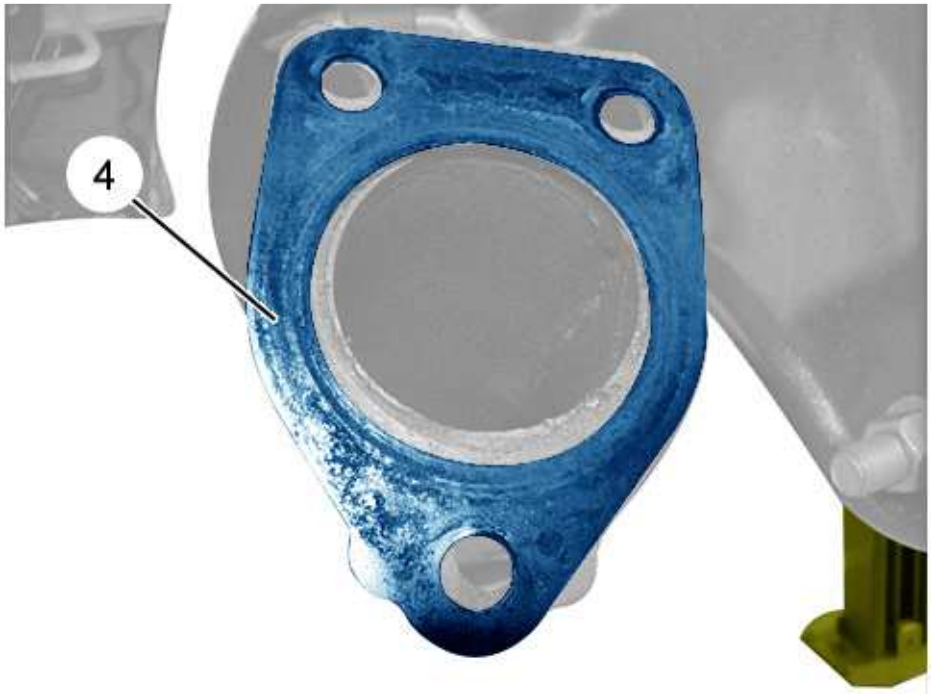

b1jg0o8d

WARNING : Always replace the seal (4)

WARNING : Always replace the 3 bolts (1)

Refit :

- The seal (4) of the silencer (2) (new)
- The exhaust silencer (2) ; Using the component lift

WARNING : Replace the faulty exhaust flexible mountings

Couple up the flexible mountings (3).

Fit 3 new screws (1).

Remove the unit lifting jack.

Start the engine.

Check that there are no leaks.

Stop the engine.

3 - INTERMEDIATE EXHAUST LINE

3 - 1 - Removing

ESSENTIAL : Wait at least one hour before carrying out any work on the exhaust line

Put the vehicle on a hoist.

Place the component lift under the exhaust line (Intermediate).

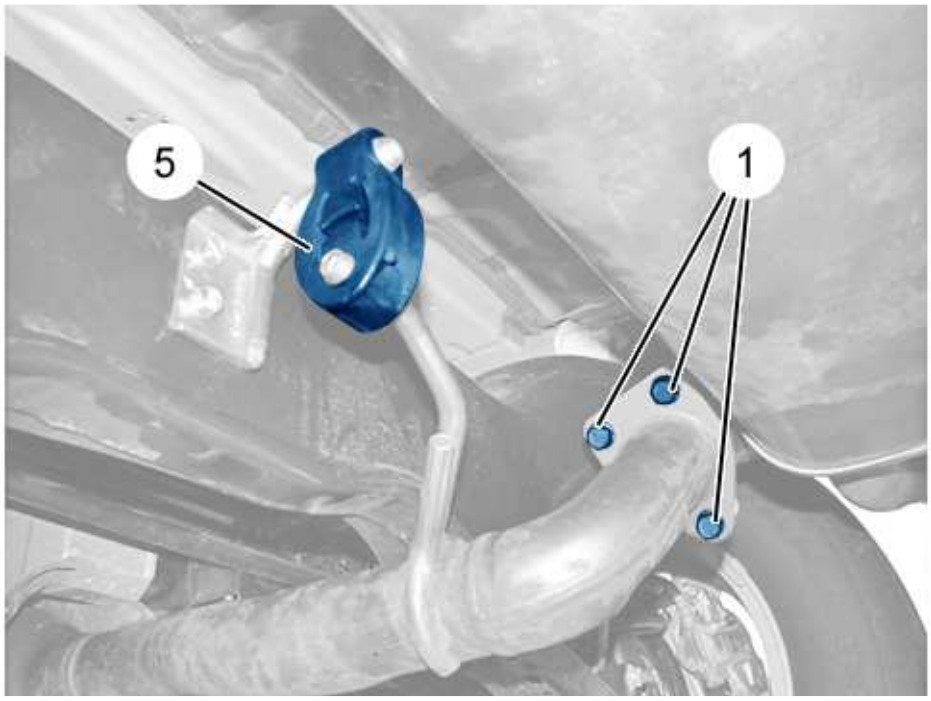

b1jg0o9d

Remove the 3 bolts (1).

Uncouple the hanger (5).

Remove the silencer (2) seal (4).

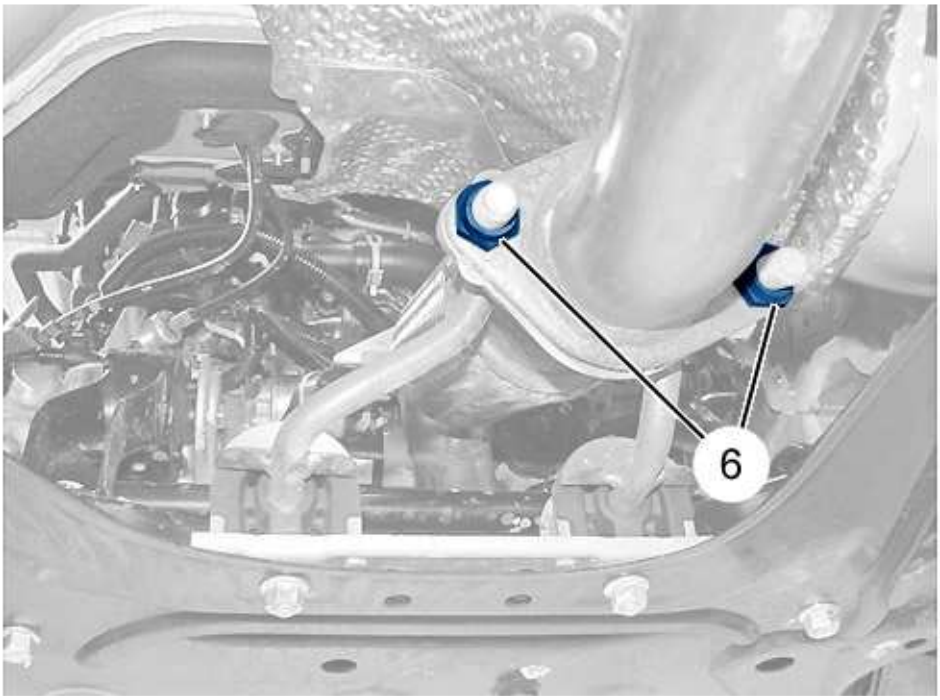

b1jg0qtd

Remove :

- The nuts (6)
- The seal on the exhaust front pipe

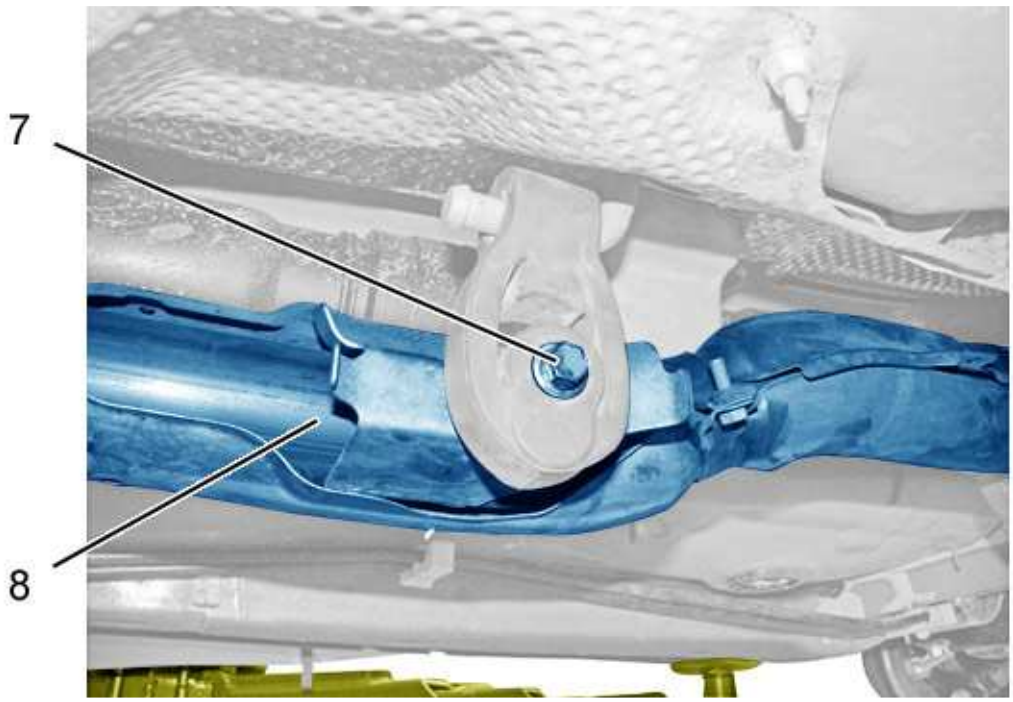

b1jg0oxd

Remove :

- The (7) bolt
- The intermediate exhaust line (8) ; Using the component lift

3 - 2 - Refitting

> **WARNING :** Adhere to the tightening torques

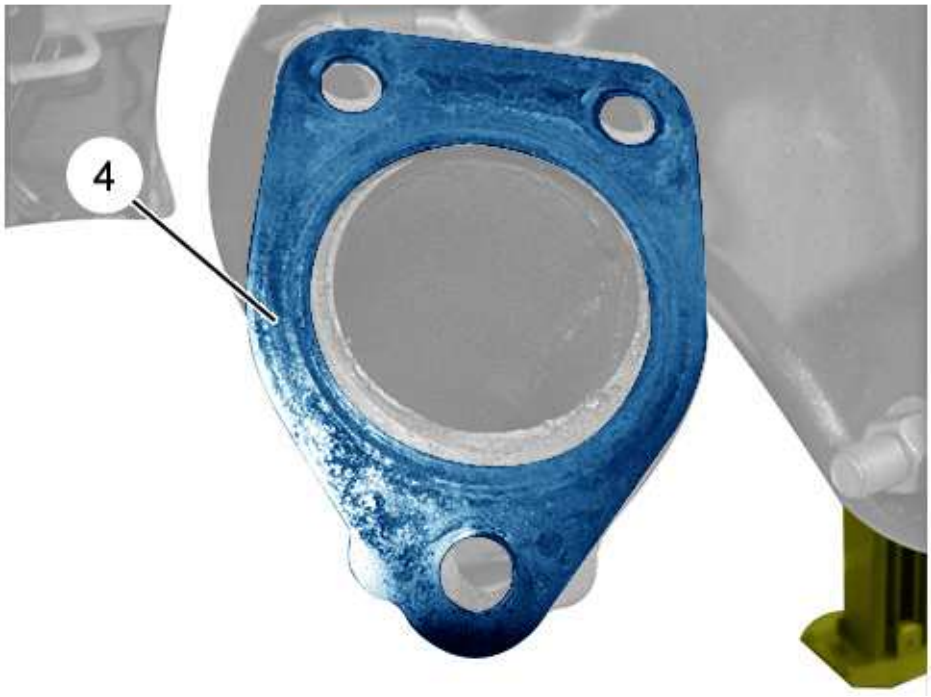

b1jg0o8d

WARNING : Always replace the seal (4)

WARNING : Always replace the 3 bolts (1)

WARNING : Always replace the front exhaust pipe seal

Refit :

- The seal (4) of the silencer (2) (new)
- The intermediate exhaust line (8) ; Using the component lift
- The 3 bolts (1) (new)
- The seal on the exhaust front pipe (new)
- The nuts (6)
- The (7) bolt

Couple up the hanger (5).

Remove the unit lifting jack.

Start the engine.

Check that there are no leaks.

Stop the engine.

4 - FRONT EXHAUST PIPE

4 - 1 - Removing

ESSENTIAL : Wait at least one hour before carrying out any work on the exhaust line

Put the vehicle on a hoist.

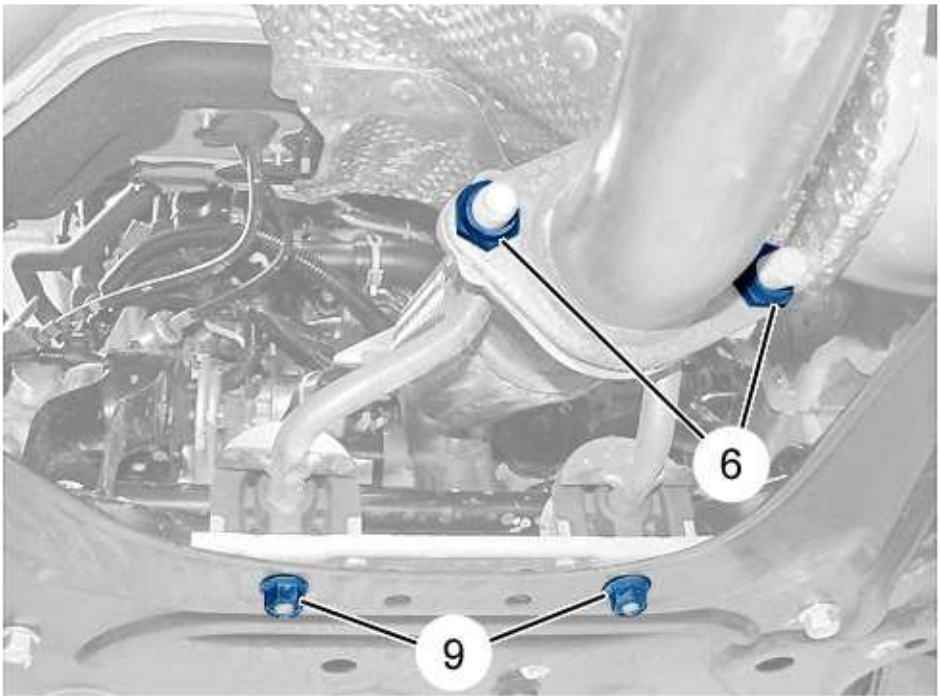

b1jg0qud

Remove :

- The protective panel under the engine
- The front RH driveshaft
- The nuts (6)
- The seal on the exhaust front pipe
- The nuts (9)

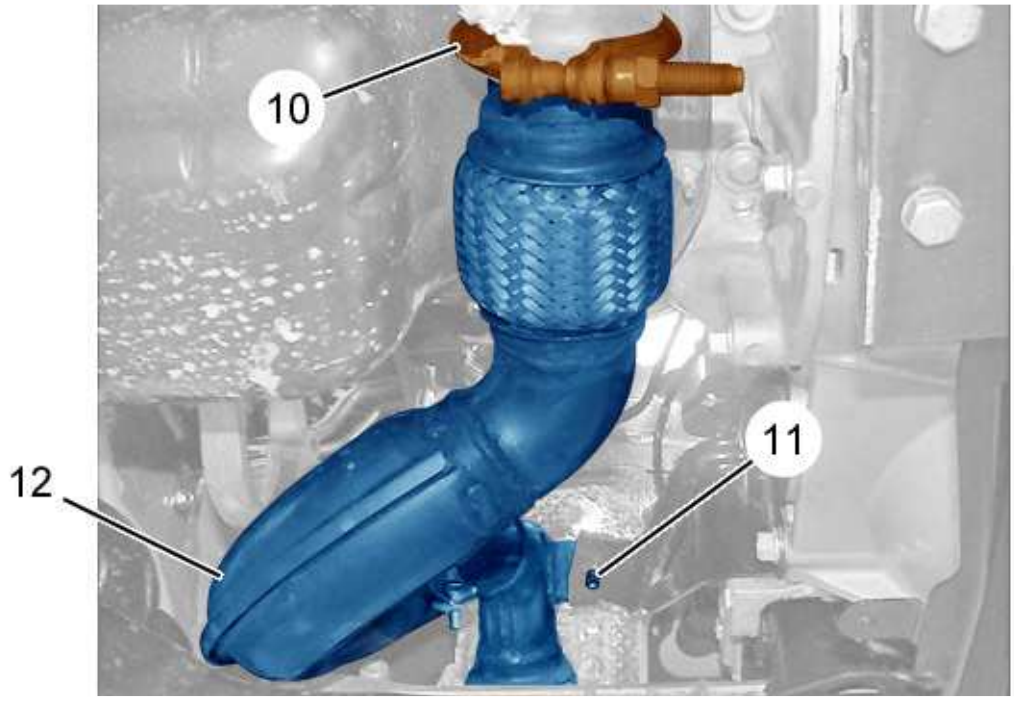

b1jg0qvd

Remove :

- The bolt (11)
- The clip (10)
- The front exhaust pipe (12)

4 - 2 - Refitting

> **WARNING :** Adhere to the tightening torques

> **WARNING :** Always replace the front exhaust pipe (12) seal

Refit :

- The seal on the exhaust front pipe (12)
- The front exhaust pipe (12)
- The bolt (11)
- The clip (10)
- The nuts (9)
- The nuts (6)
- The front RH driveshaft
- The protective panel under the engine

Start the engine.

Check that there are no leaks.

Stop the engine.

TIGHTENING TORQUES : EXHAUST SYSTEM

WARNING : Adhere to the tightening torques

1 - CATALYTIC CONVERTER AND PARTICLE FILTER

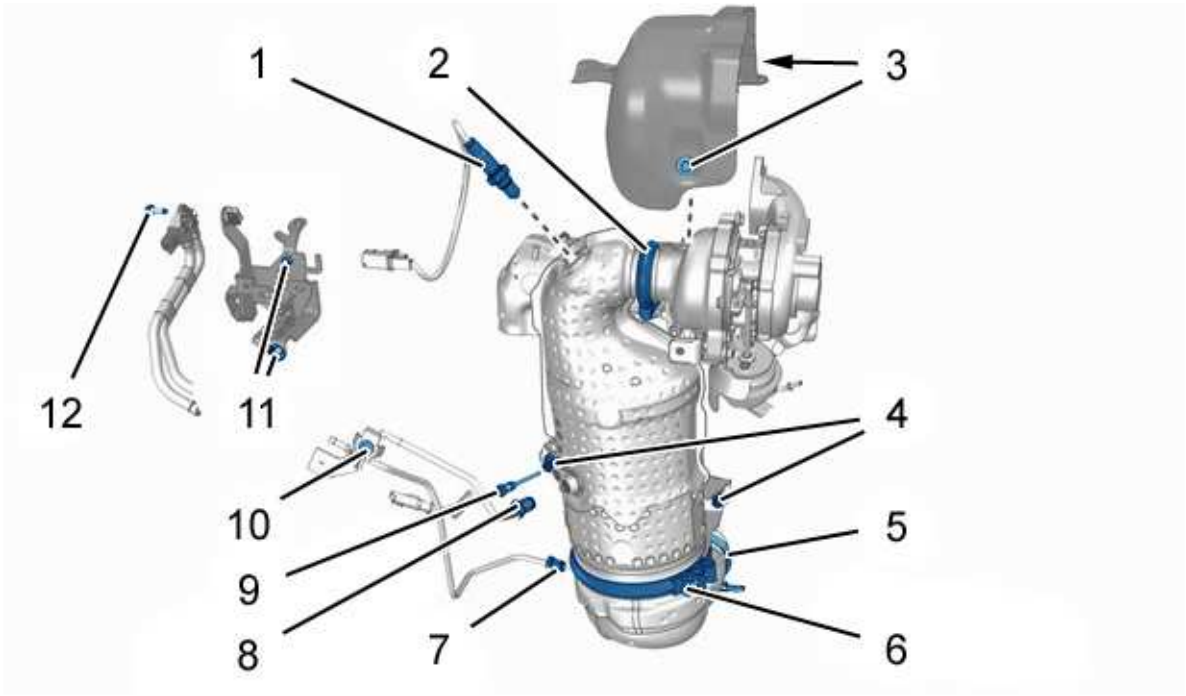

b1jb0fhd

Referen	Designation	Tightening torques
(1)	Oxygen sensor	Tightening to 2,5 m.daN
(2)	Clip (Catalytic converter / Turbocharger)	Tightening to 5 m.daN
(3)	bolts (Front catalytic converter heat shield)	Tightening to 2,5 m.daN
(4)	Nuts (Catalytic converter and particle filter / Cylinder block)	Tightening to 0,8 m.daN
(5)	Clip (front pipe / Catalytic converter and particle filter)	Tightening to 2,5 m.daN
(6)	Clip (Catalytic converter / Particle filter)	Tightening to 2,3 m.daN
(7)	Particle filter inlet exhaust pressure pipe	Tightening to 2 m.daN
(8)	Particle filter outlet exhaust pressure pipe	Tightening to 2 m.daN
(9)	Exhaust gas temperature sensor	Tightening to 0,3 m.daN
(10)	bolts (Retaining bracket / Exhaust gas pressure sensor pressure take-offs)	Tightening to 3 m.daN
(11)	bolts (Connector support / Particle filter exhaust differential pressure sensor)	Tightening to 0,8 m.daN
(12)	bolts (Particle filter exhaust differential pressure sensor)	Tightening to 0,8 m.daN

2 - EXHAUST SYSTEM

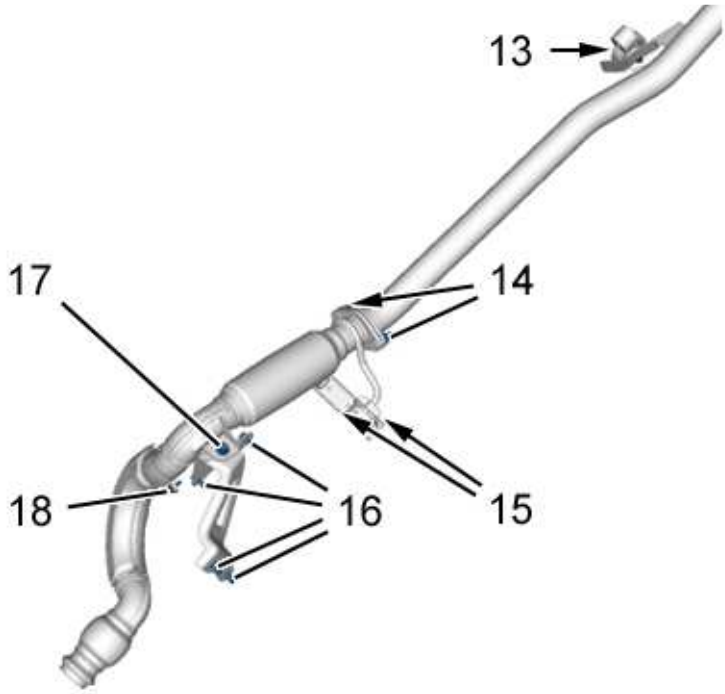

b1jb0fid

Reference	Designation	Tightening torques
(13)	bolts (Exhaust front hangers)	Tightening to 0,95 m.daN
(14)	Nuts (Exhaust system)	Tightening to 5,9 m.daN
(15)	Nuts (Hangers)	Tightening to 0,95 m.daN
(16)	bolts	Tightening to 4,7 m.daN
(17)	bolts	Tightening to 4,7 m.daN
(18)	bolts	Tightening to 0,95 m.daN

3 - REAR SILENCER

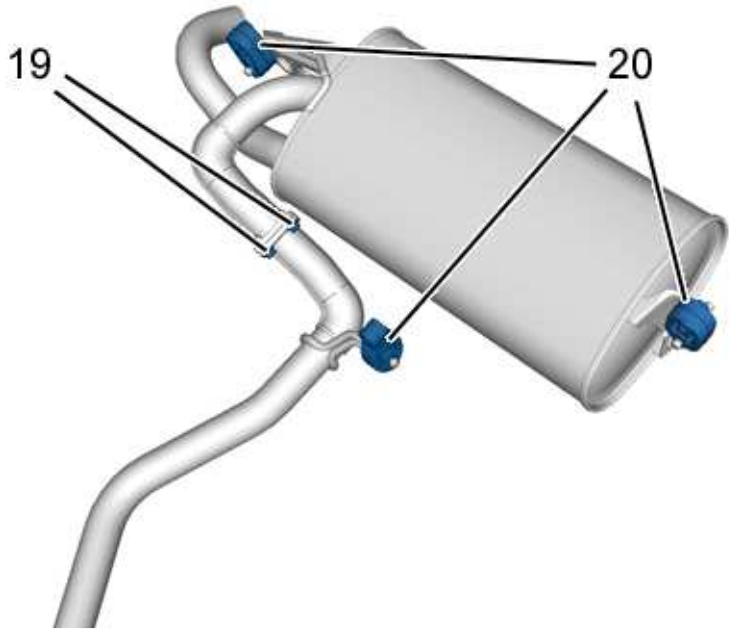

b1jb0fjd

Reference	Designation	Tightening torques
(19)	bolts (Rear silencer)	Tightening to 2,5 m.daN
(20)	Hangers	-

DRAINING - FILLING - BLEEDING : COOLING SYSTEM

ESSENTIAL : Observe the safety and cleanliness recommendations

WARNING : Use the approved coolant only "Super Long Life Coolant L255"

Equipment : Equipment for filling by vacuum.

1 - PRELIMINARY OPERATIONS

ESSENTIAL : Do not operate on the engine when it is hot ; Risk of burns

Put the vehicle on a hoist.

Disconnect the ancillaries battery.

Remove : The front bumper deflector.

2 - DRAIN AND REFILL

Remove the plug from the header tank .

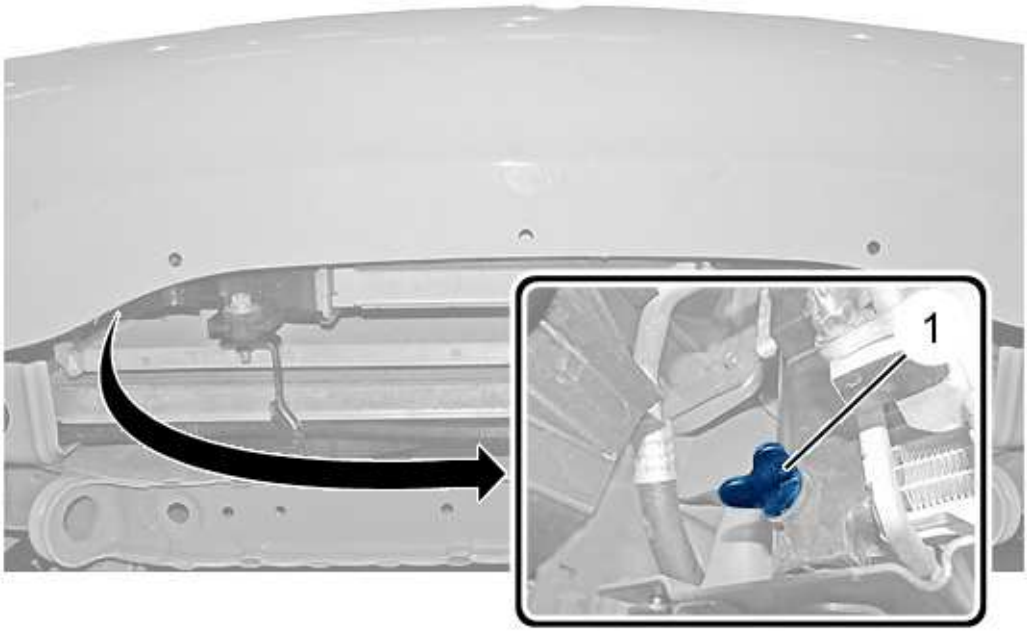

b1gi07vd

NOTE : Place a tray under the radiator to drain the circuit cleanly

Remove the radiator drain plug (1).

Remove : The engine rear acoustic shield.

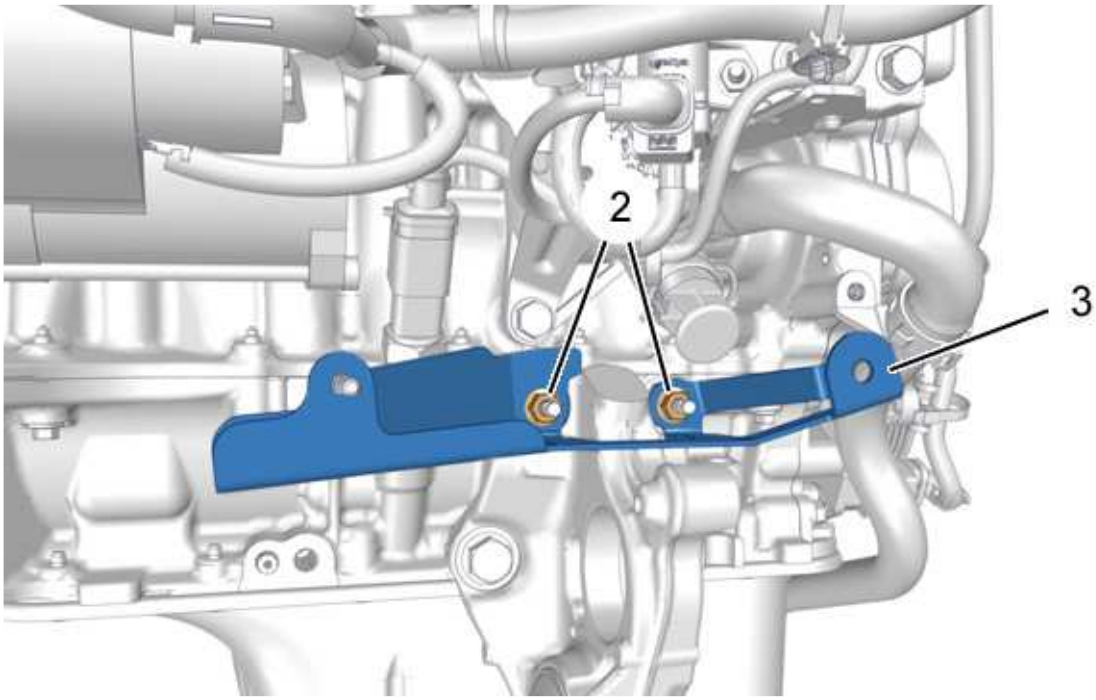

b1gi08nd

Remove :

- The nuts (2)
- The bracket (3)

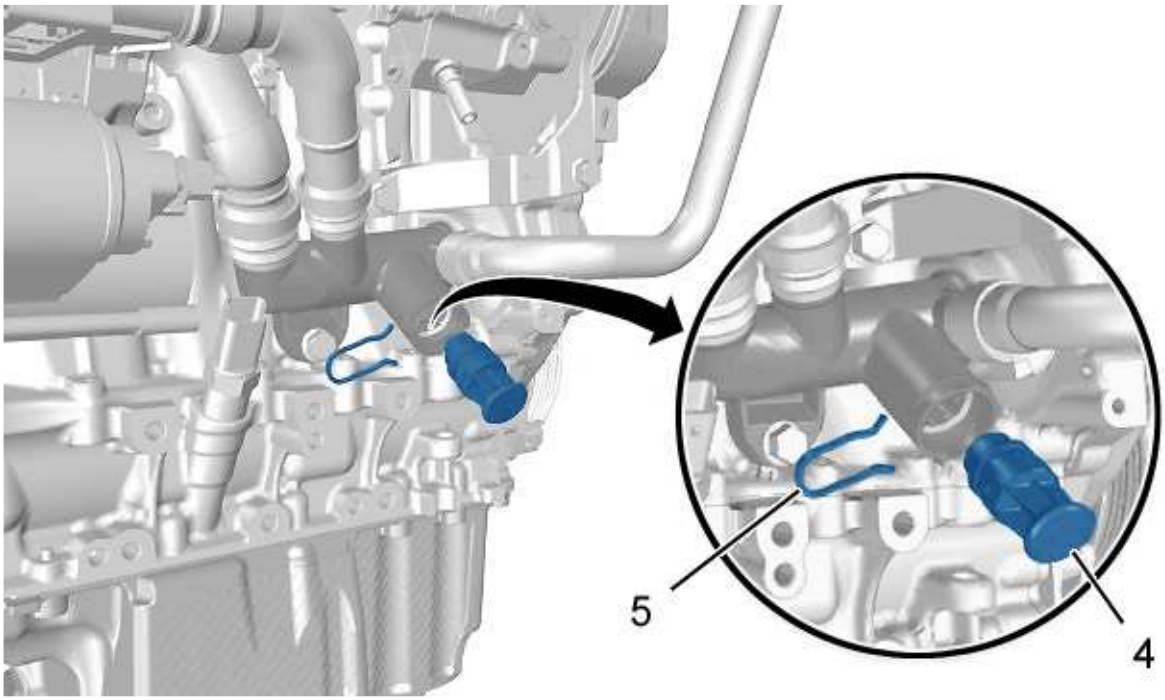

b1gi08od

Remove the clip (5).

Drain the cylinder block, removing plug (4).

Allow the liquid to flow out.

3 - REFILLING



b1gi07xd

> **WARNING :** Always replace the seal (6)

Refit :

- The clip (5)
- The cap (4)
- The bracket (3)
- The nuts (2)
- The engine rear acoustic shield
- The radiator drain plug (1)

> **WARNING :** Before filling, flush the cooling system with clean water

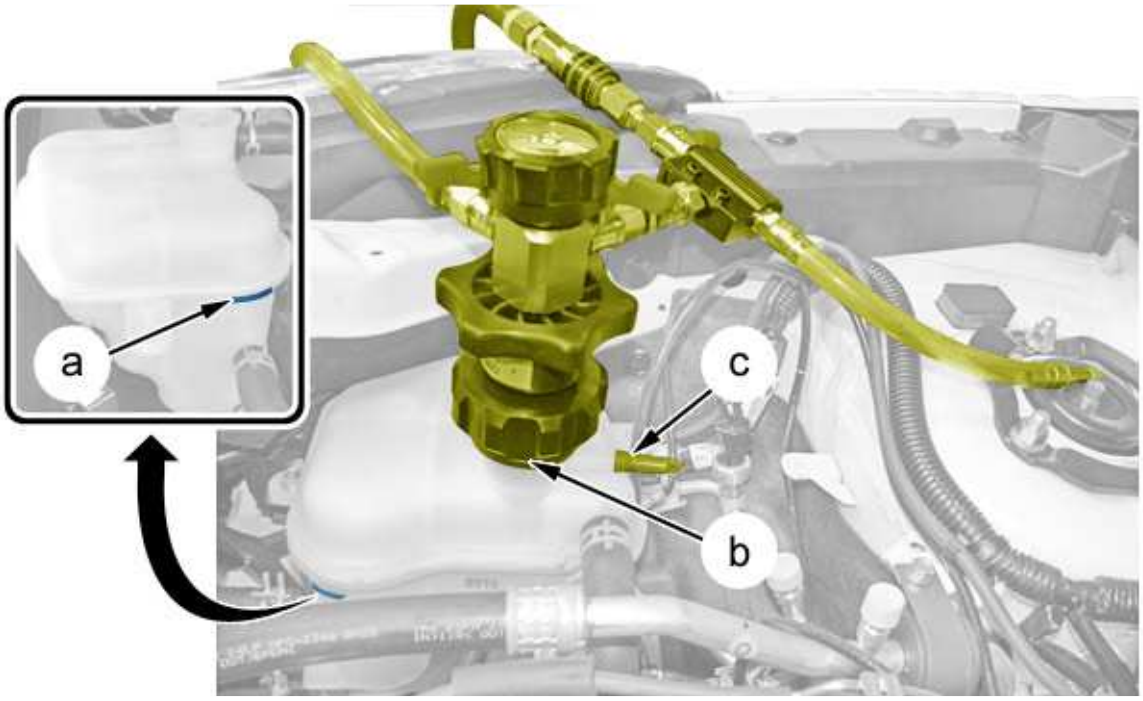

b1gi07yd

Position : The vacuum filling equipment (at "b").

Put in place a seal plug (at "c").

Create a vacuum in the cooling system ; Check the sealing of the circuit.

Fill the cooling system ; By means of the vacuum filling equipment.

NOTE : Refer to the relevant documentation

Remove : The vacuum filling equipment.

Remove the sealing cap (at "c").

Top up the coolant level (To the max level) (at "a").

Close the expansion chamber cap.

WARNING : Perform the operations to be carried out following reconnection of the battery

Reconnect the ancillaries battery.

4 - CHECK

WARNING : The level must be to the "maximum" mark on the expansion chamber (at "a")

WARNING : The air conditioning control should not operate during this phase

Start the engine.

Keep the engine speed at 2500 rpm, up to the second cooling cycle (cooling fan(s) cutting in and out).

Stop the engine and wait for it to cool down.

Open the expansion chamber cap (Carefully).

If necessary top the level up to the maximum mark (engine cold).

Close the expansion chamber cap.

Check the absence of leaks.

Refit : **The front bumper deflector**.

REMOVING - REFITTING : ENGINE RING SEALS

ESSENTIAL : Observe the safety and cleanliness recommendations

NOTE : The sealing rings provide the seal on the crankshaft on the oil pump side and on the flywheel side, as well as on the end of the camshaft on the timing pinion side ; The sealing rings consist of a preformed Teflon lip

NOTE : When the engine is started, the oil pressure exerts a force on the lip which makes contact leaving a film of oil on the shaft thus creating sealing

WARNING : Check the absence of any mark on the bearings of the sealing ring

WARNING : If the lip is deformed, replace the sealing ring

NOTE : The seal must remain on its support during fitting ; If handling, put the ring back on its support and leave the assembly in position for 30 minutes before refitting

1 - PARTS WHICH MUST ALWAYS BE REPLACED

1 - 1 - Camshaft oil seal

Designation	Quantity
Camshaft pulley screw	1
Camshaft oil seal	1

1 - 2 - Oil pump ring seal

Designation	Quantity
Oil pump ring seal	1

1 - 3 - Crankshaft ring seal

Designation	Quantity
Flywheel bolts	6
Crankshaft ring seal (on the gearbox side)	1

2 - TOOLING

tool	Reference	Designation
	[0194-K]	Camshaft ring seal fitting drift

[0194-K]  *e5ag063t*		
[0194-L]  *e5ag064t*	[0194-L]	Crankshaft ring seal fitting drift (Timing gear side)
[0194-M] 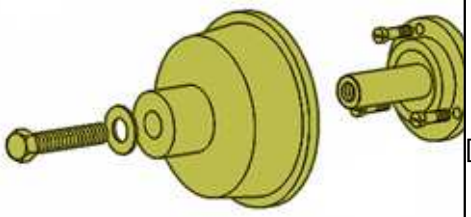 *e5ag065t*	[0194-M]	Crankshaft ring seal fitting drift (Flywheel side)
[0132-AA] 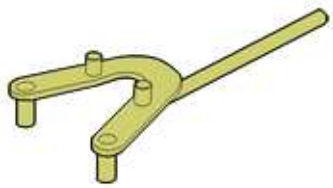 *e5ab08vt*	[0132-AA]	Immobilisation tool

3 - PRELIMINARY OPERATIONS

Disconnect the ancillaries battery.

Remove the engine style cover .

4 - CAMSHAFT OIL SEAL

> **ESSENTIAL :** Respect the safety and cleanliness recommendations that are specific to high pressure diesel injection (HDi) engines

4 - 1 - Removing

Remove the timing belt .

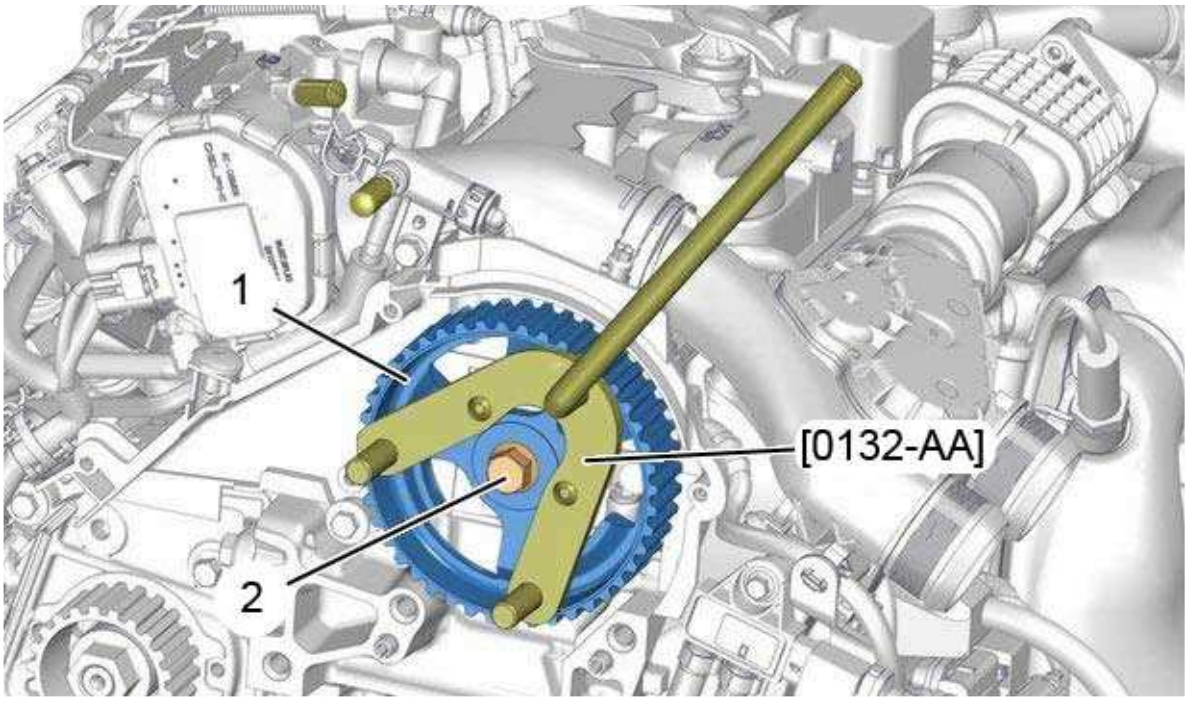

b1bg16ed

> **WARNING :** Remove the camshaft setting peg

Immobilise the camshaft pulley (1) ; Using tool [0132-AA].

Remove :

- The (2) bolt
- The camshaft pulley (1)

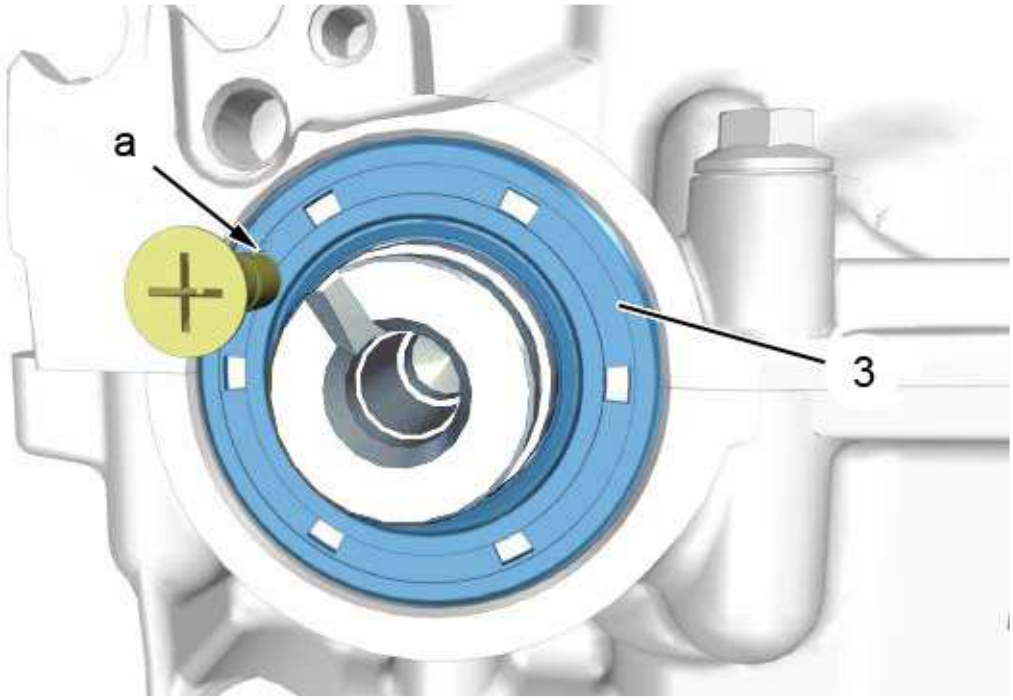

b1bg16fd

> **WARNING :** Check the absence of any mark on the bearings of the sealing ring (3)

Drill a hole 3,5 mm in diameter in the ring seal (3) (at "a").

Screw a bolt into the hole (at "a").

Remove the seal/screw assembly using pliers.

4 - 2 - Refitting

> **WARNING :** Adhere to the tightening torques

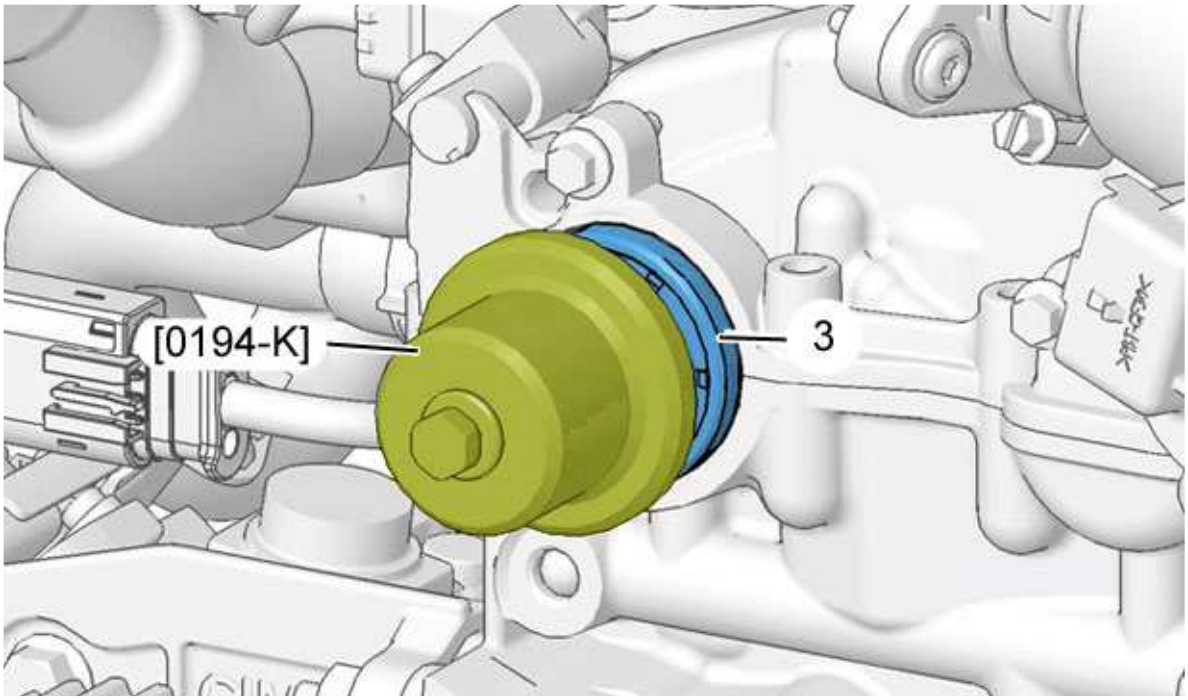

b1bg16gd

> **WARNING :** Always replace the ring seal (3)

> **WARNING :** Wipe away all the oil in the sealing ring housing and make sure that there are no marks on the sealing ring

Fit the sleeve equipped with its sealing ring (3) (new) onto the camshaft.

Fit the tool [0194-K].

Tighten the bolt of the tool [0194-K] until the surface of the tool comes into contact with the surface of the camshaft carrier .

Remove the tool [0194-K].

> **WARNING :** Systematically replace the screw (2)

Refit :

- The camshaft pulley (1)
- The (2) bolt (new) ; Using tool [0132-AA]
- The timing belt

5 - OIL PUMP RING SEAL

5 - 1 - Removing

Remove :

- The timing belt
- The crankshaft pulley
- The crankshaft pulley cotter pin

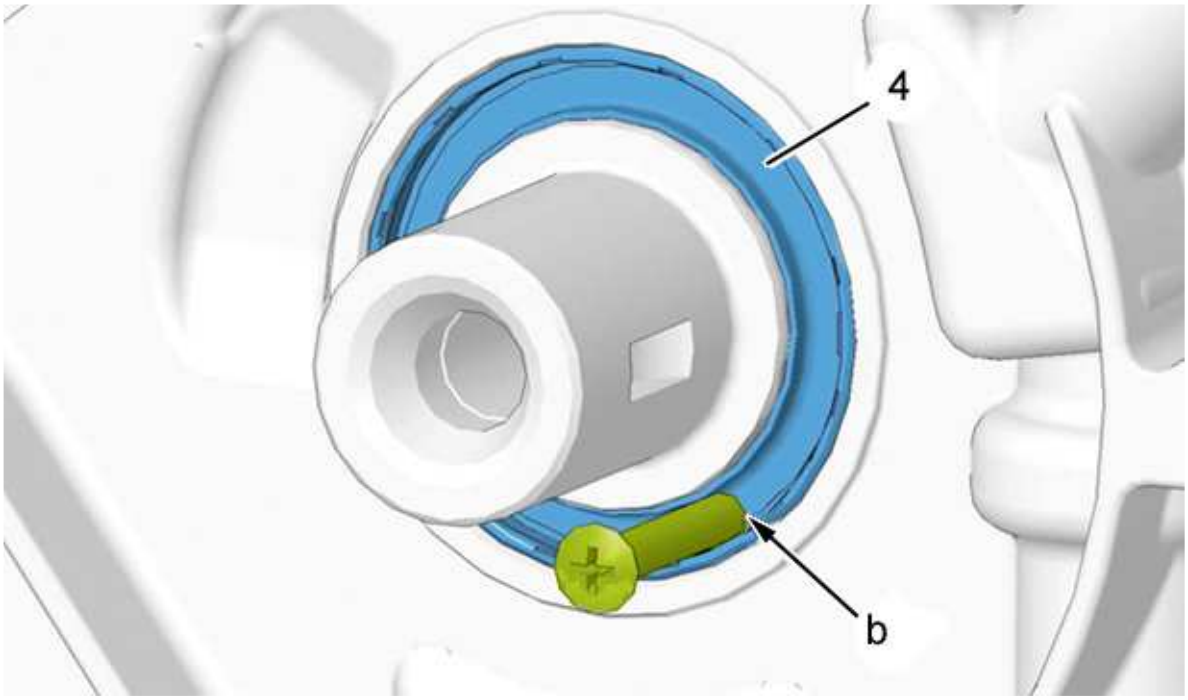

b1bg16hd

> **WARNING :** Check the absence of any mark on the bearings of the sealing ring (4)

Drill a hole 3,5 mm in diameter in the ring seal (4) (at "b").

Screw a bolt into the hole (at "b").

Remove the seal/screw assembly using pliers.

5 - 2 - Refitting

> **WARNING :** Adhere to the tightening torques

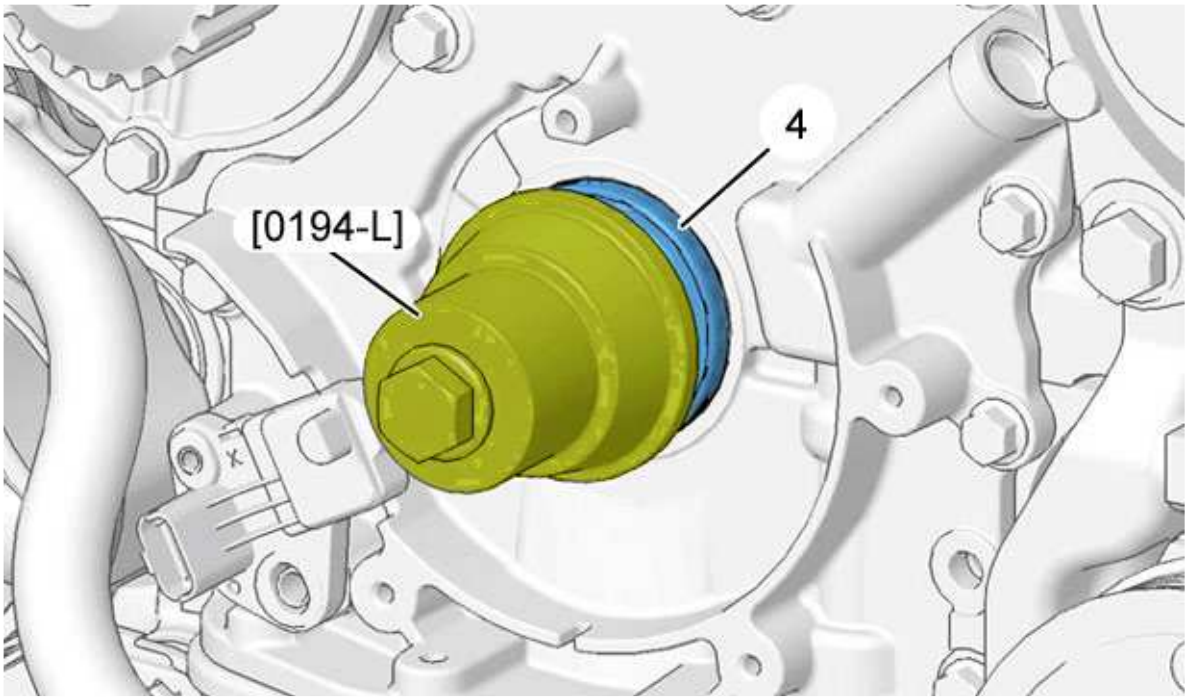

b1bg16id

WARNING : Always replace the ring seal (4)

WARNING : Wipe away all the oil in the sealing ring housing and make sure that there are no marks on the sealing ring

Position the sleeve fitted with its new ring seal (4) on the crankshaft .

Put the tool [0194-L] and the crankshaft pulley bolt in place.

Tighten the crankshaft pulley bolt until the surface of the tool [0194-L] comes into contact with the surface of the oil pump .

Remove the tool [0194-L].

Refit :

- The crankshaft pulley cotter pin
- The crankshaft pulley
- The timing belt

6 - CRANKSHAFT SEAL RING

6 - 1 - Removing

Remove :

- The gearbox

- The clutch mechanism

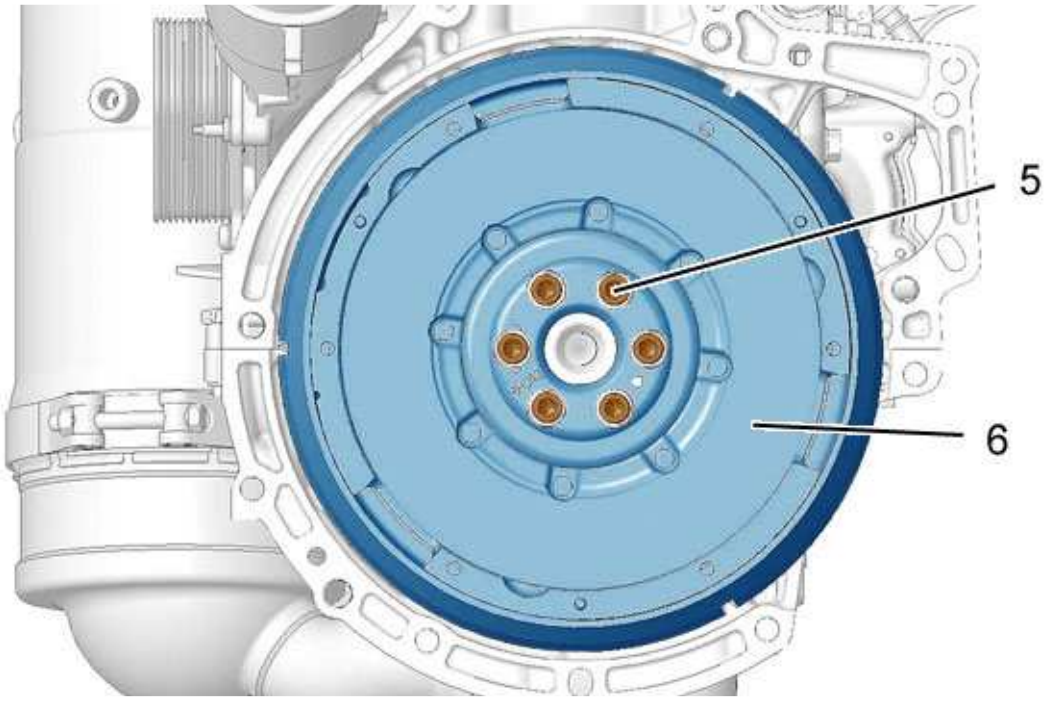

b1cg02qd

Remove :

- The bolts (5)
- The flywheel (6)

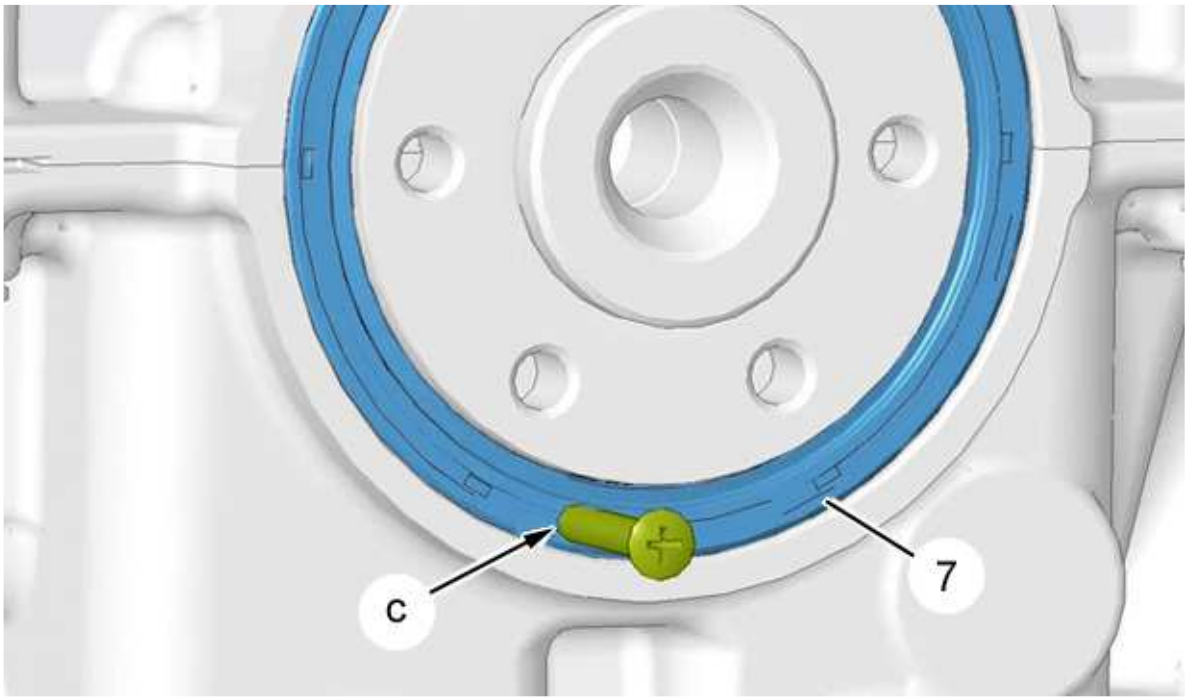

b1bg16jd

WARNING : Check the absence of any mark on the bearings of the sealing ring (7)

Drill a hole 3,5 mm in diameter in the ring seal (7) (at "c").

Screw a bolt into the hole (at "c").

Remove the seal/screw assembly using pliers.

6 - 2 - Refitting

WARNING : Adhere to the tightening torques

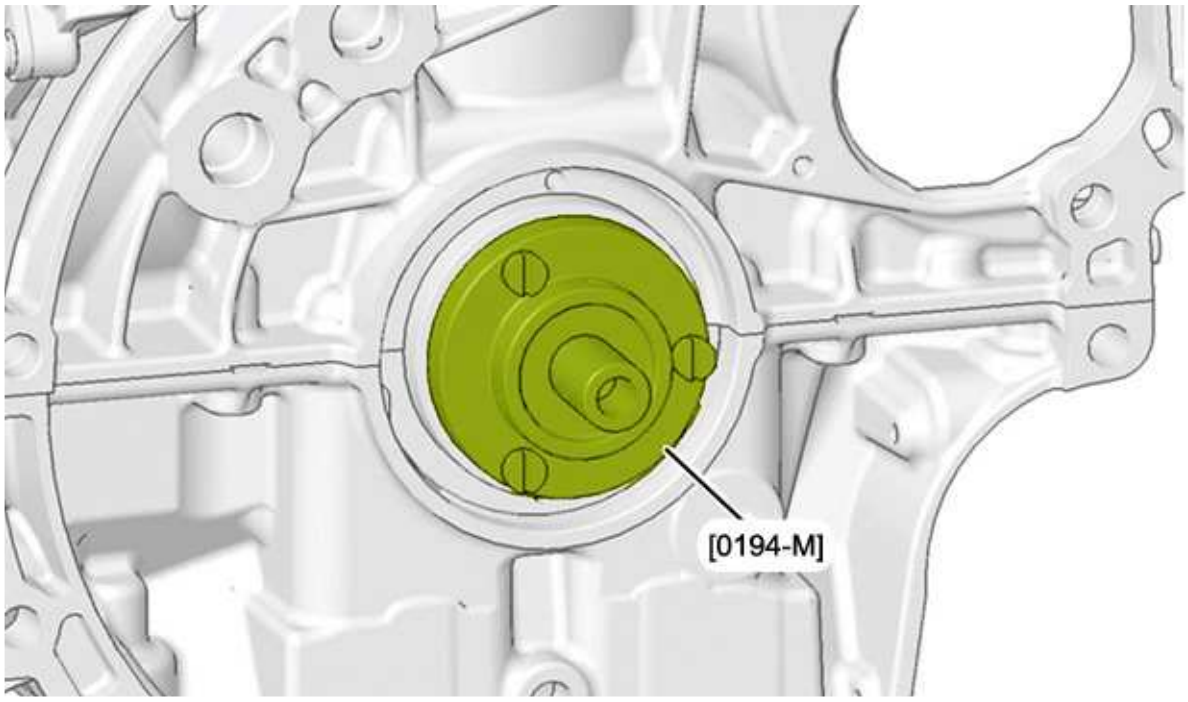

b1bg0pud

Put the lower part of the tool [0194-M] in place on the flywheel .

WARNING : Always replace the ring seal (7)

WARNING : Wipe away all the oil in the sealing ring housing and make sure that there are no marks on the sealing ring

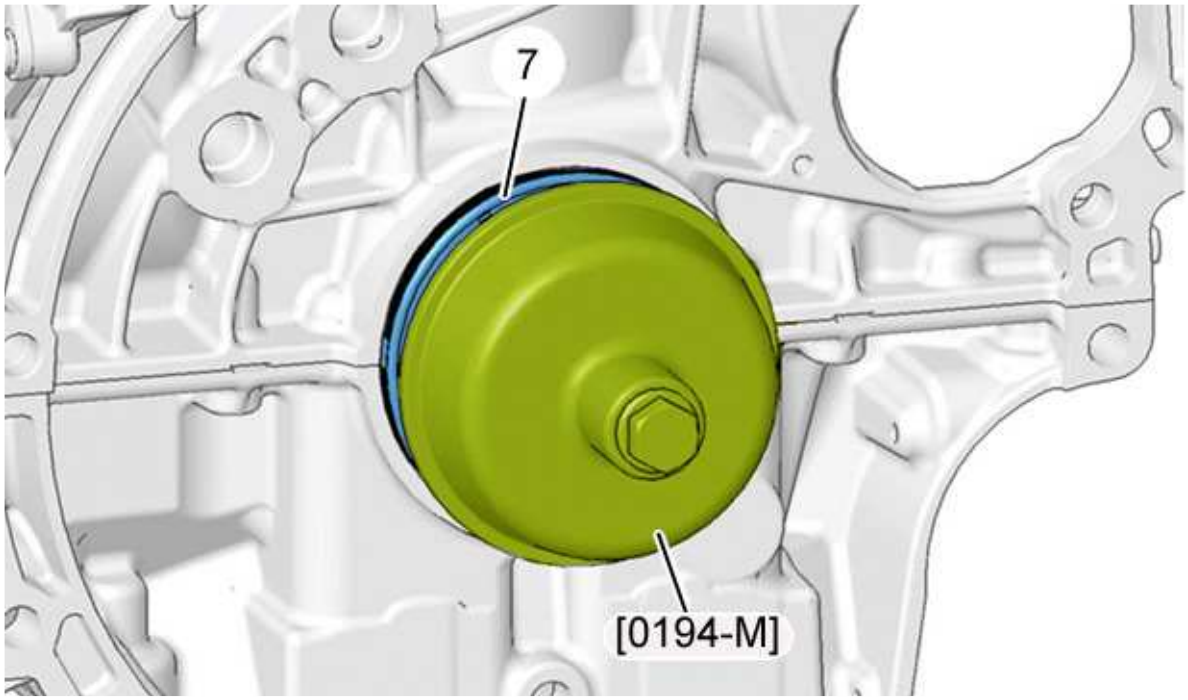

b1bg16ld

Fit the sleeve equipped with its sealing ring (7) (new) onto the lower part of the tool [0194-M].

Tighten the bolt of the tool [0194-M] until the surface of the tool comes into contact with the surface of the cylinder block .

Remove the tool [0194-M].

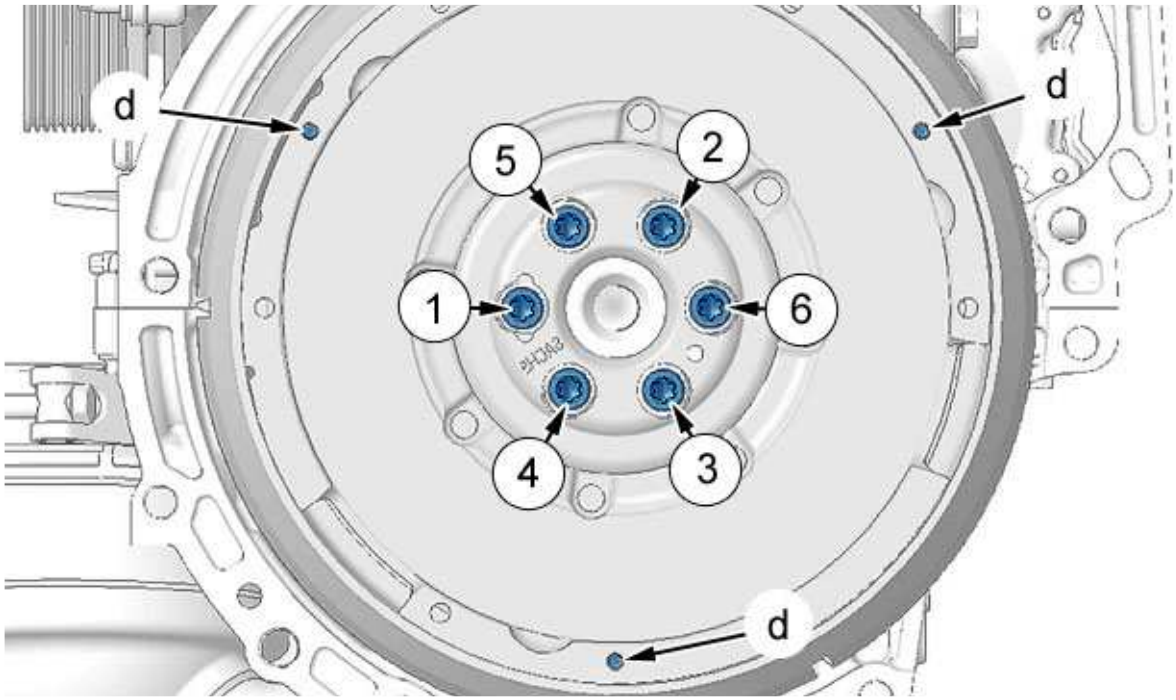

b1cp0m2d

WARNING : Always replace the bolts (5)

Refit :

- The flywheel (6)
- The bolts (5)

WARNING : Observe the order of tightening of the bolts (5)

Check that the 3 clutch centring pins are present (at "d") (Manual gearbox).

Refit :

- The clutch mechanism
- The gearbox

7 - ADDITIONAL OPERATIONS

Refit the engine style cover .

WARNING : Perform the operations that are required following a reconnection of the ancillaries battery

Reconnect the ancillaries battery.

PROHIBITED OPERATIONS : DIRECT INJECTION SYSTEM (HDI)

1 - PROTECTION

WARNING : Always plug the apertures straightaway after opening up the fuel circuit ; Using the specific plugs kit

2 - CLEANING

WARNING : The use of a "high pressure" cleaner is prohibited

WARNING : Do not use compressed air

3 - FUEL SUPPLY SYSTEM

Recommended fuel : Diesel.

WARNING : Do not use fuel other than diesel (Risk of destruction of the injection system and of the engine)

WARNING : The addition of additives such as fuel circuit cleaner/remetalliser, is prohibited

4 - ELECTRICAL CIRCUIT

Exchanging an engine management ECU between two vehicles makes it impossible to start the vehicles.

WARNING : Do not supply a diesel injector with 12 volts

5 - HIGH PRESSURE FUEL PUMP

5 - 1 - CONTINENTAL / SIEMENS assembly

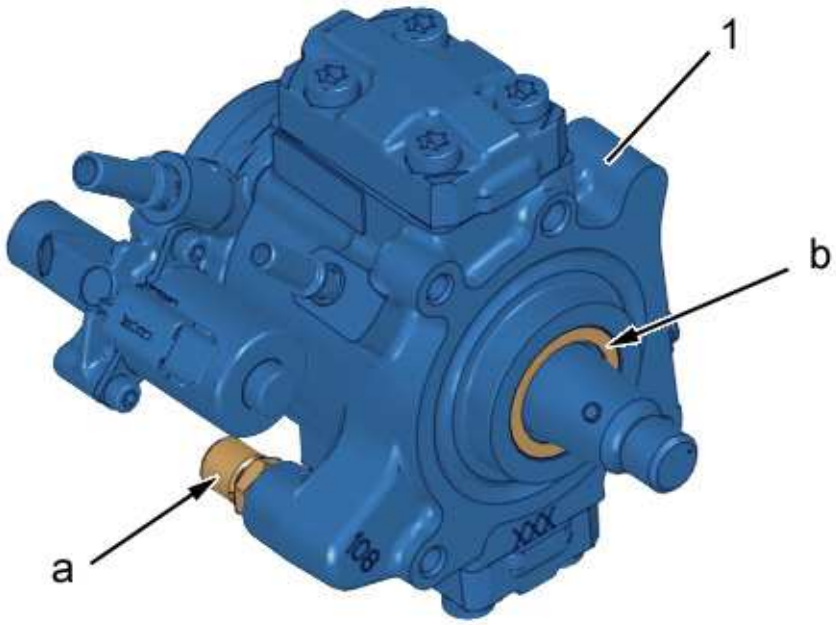

b1bk3ymd

Do not separate the following components from the fuel high pressure pump (1) :

- High pressure outlet union (at "a") (malfunction)
- Sealing ring (at "b") (replacement parts not available)

5 - 2 - BOSCH assembly

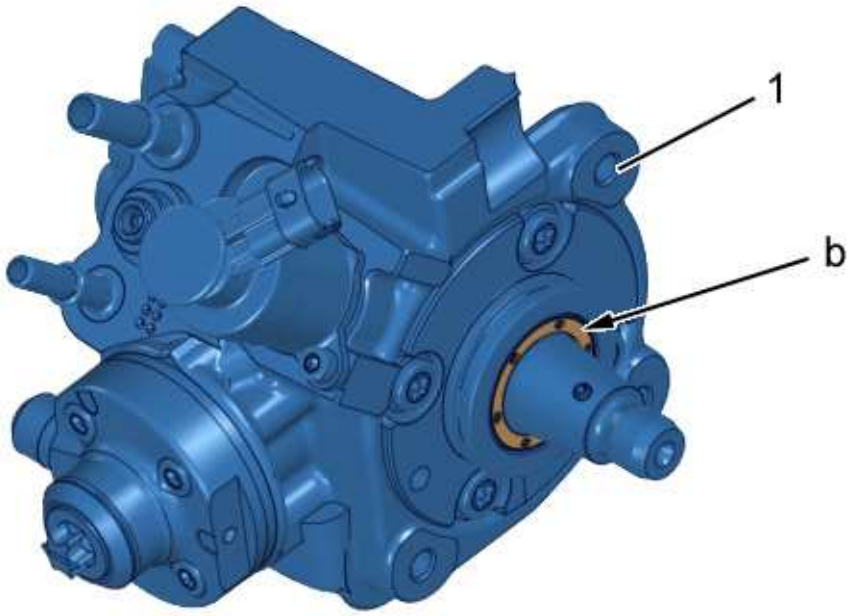

b1bk3ynd

Do not separate the ring seal from the high pressure fuel pump (1) (at "b") (No replacement parts).

6 - DIESEL INJECTOR

6 - 1 - CONTINENTAL / SIEMENS assembly

> **WARNING :** Cleaning operations using diesel and ultrasound are prohibited

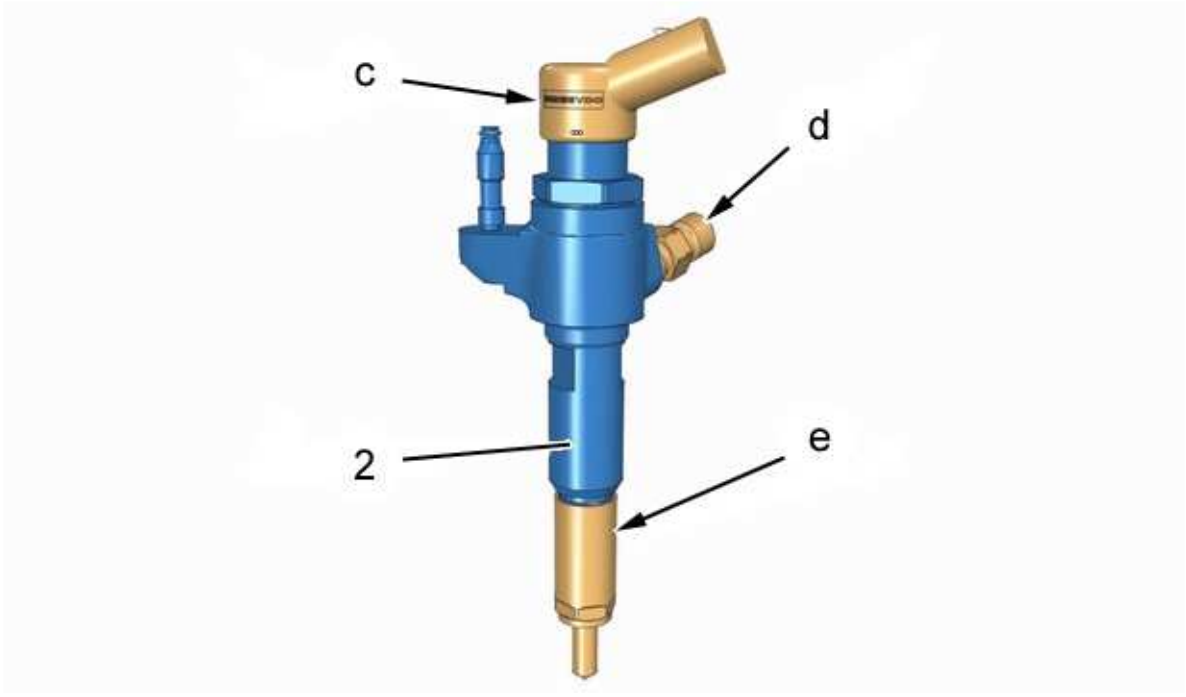

b1bk3ypd

Do not separate the diesel injector body (2) from the following components :

- High pressure union (at "d") (malfunction)
- Diesel injector (at "e") (replacement parts not available)
- Electromagnetic element (at "c") (replacement parts not available)

Calamine cleaning on the injector nose is prohibited.

6 - 2 - BOSCH assembly

> **WARNING :** Cleaning operations using diesel and ultrasound are prohibited

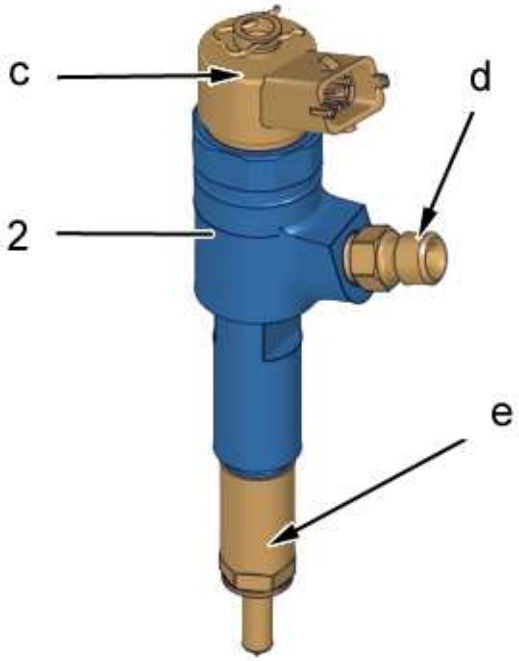

b1bk3yqd

Do not separate the diesel injector body (2) from the following components :

- High pressure union (at "d") (malfunction)
- Diesel injector (at "e") (replacement parts not available)
- Electromagnetic element (at "c") (replacement parts not available)

Calamine cleaning on the injector nose is prohibited.

REMOVING - REFITTING : CAMSHAFT HOUSING

ESSENTIAL : Observe the safety and cleanliness recommendations

1 - PARTS WHICH MUST ALWAYS BE REPLACED

Designation	Quantity
Camshaft carrier oil ducts seal	5

2 - TOOLING

tool	Reference	Designation
[0194-B] 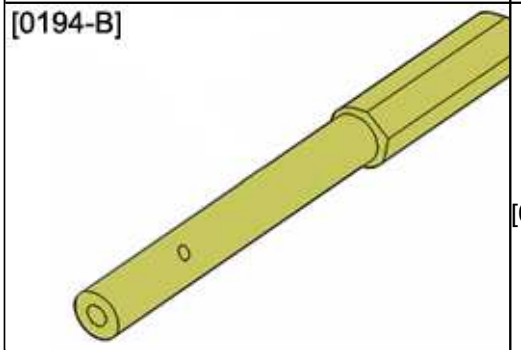 *e5ab08wt*	[0194-B]	Setting pin for camshaft pulley
[1617-J] 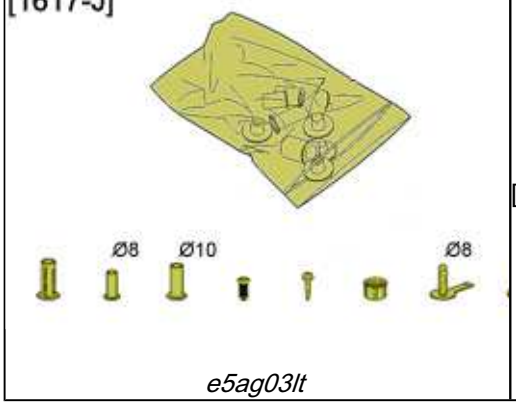 *e5ag03lt*	[1617-J]	The plugs kit HDI

3 - REMOVING

ESSENTIAL : Observe the safety and cleanliness instructions which are specific to high-pressure diesel injection engines (H.D.I.)

Disconnect the ancillaries battery.

Remove :

- The engine style cover (according to equipment)
- The air filter box
- The accessories drive belt

- The air mixer unit
- The air admission bypass valve
- The timing belt

> **WARNING :** Fit the upper right side engine mounting

Remove the exhauster .

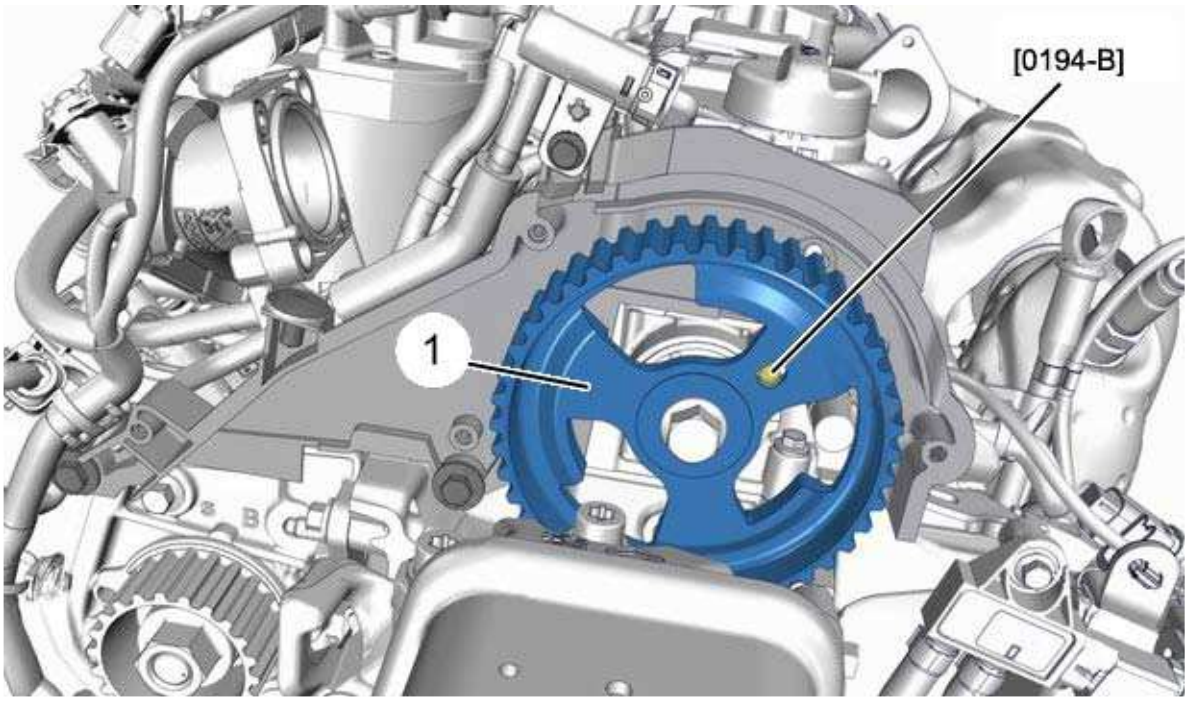

b1dg0x4d

NOTE : Pin the camshaft pulley (1) ; Using tool [0194-B]

Remove the cylinder head cover .

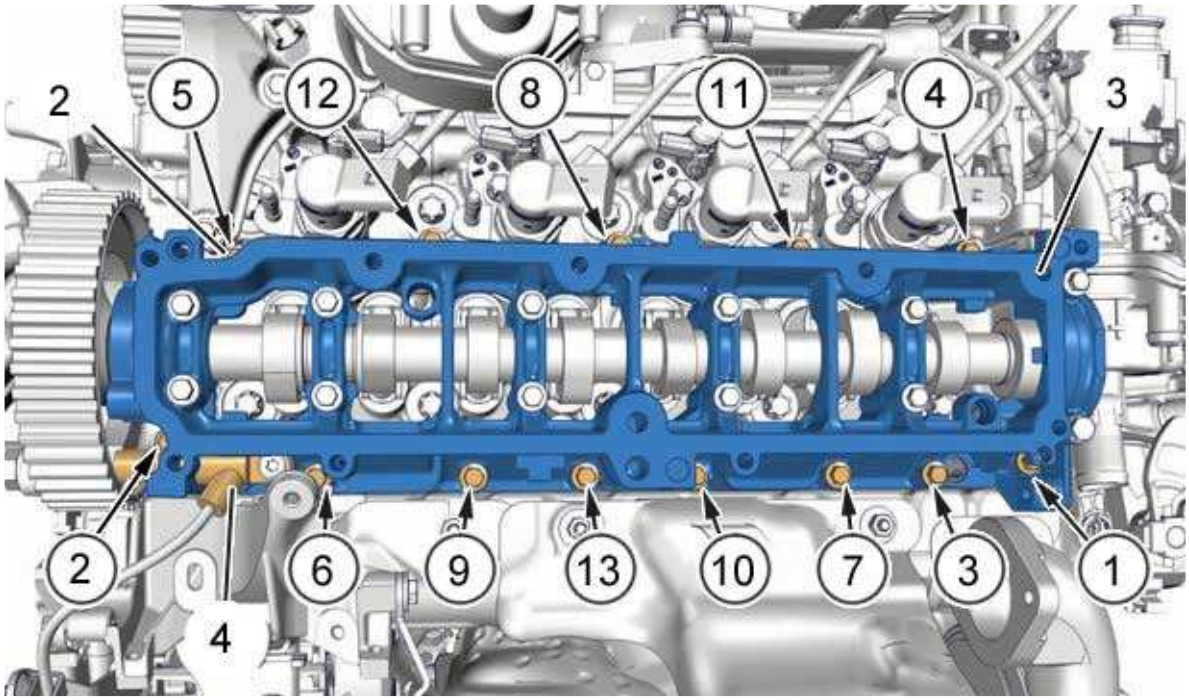

b1dg0x5d

Remove :

- The alternator
- The alternator bracket
- The camshaft position sensor (4)

> **WARNING :** Observe the slackening order

Remove the camshaft carrier (3) fixing bolts (2) (In the order shown).

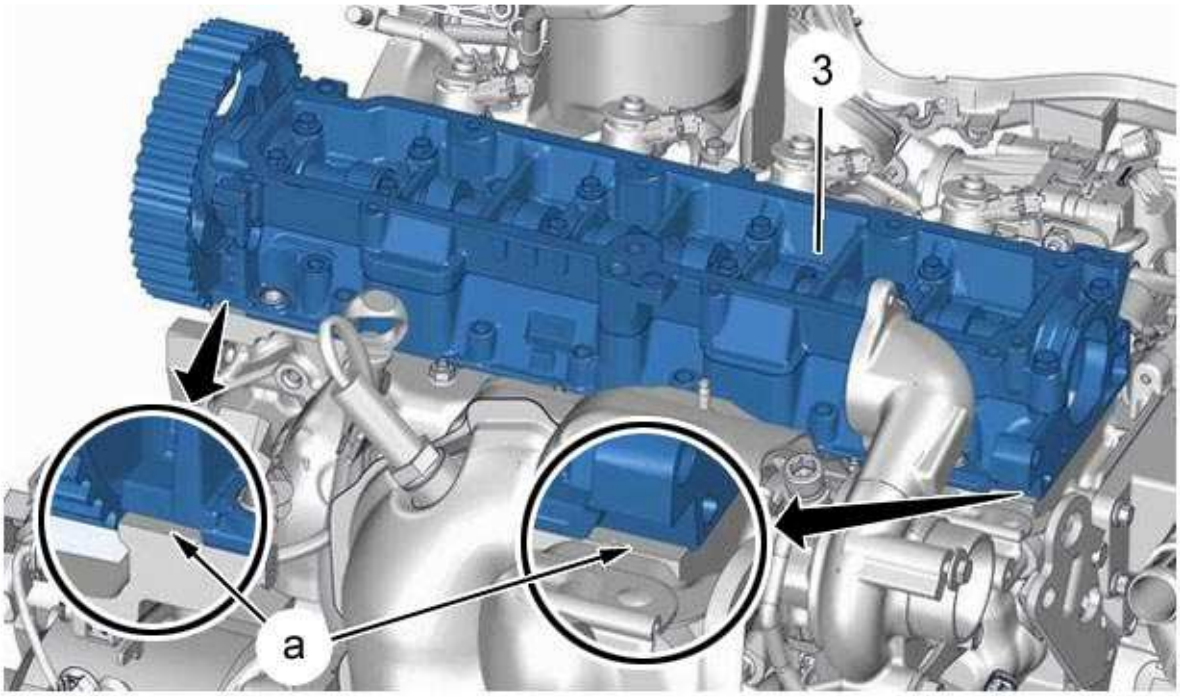

b1dg0x6d

NOTE : Remove the camshaft housing (3), using the separation zones (at "a")

4 - REFITTING

WARNING : Adhere to the tightening torques

ESSENTIAL : Observe the safety and cleanliness instructions which are specific to high-pressure diesel injection engines (H.D.I.)

WARNING : Always replace seals which have been removed

NOTE : Check the sealing of the camshaft bearing cap covers. Reseal the camshaft bearing cap covers with an approved product (if necessary)

WARNING : Clean the joint faces ; Using an index D2 cleaning product ; Do not use a cutting or abrasive tool ; The seal faces should not show any traces of impacts or scratches

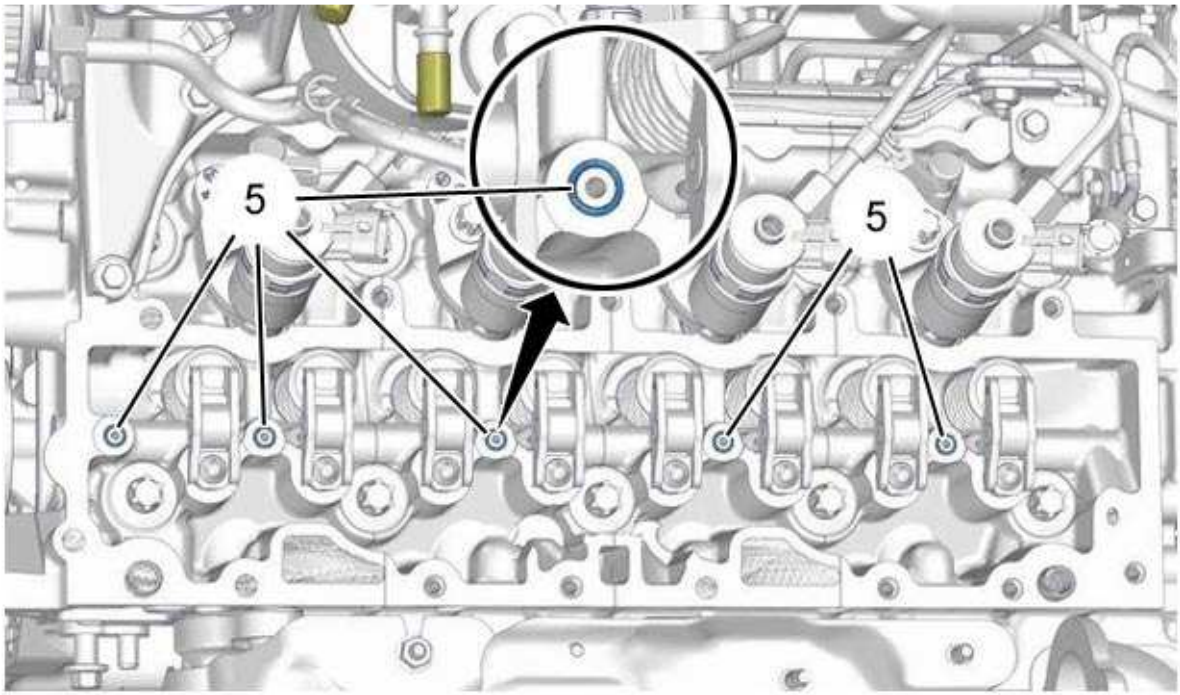

b1dg0x7d

WARNING : Always replace the seals (5)

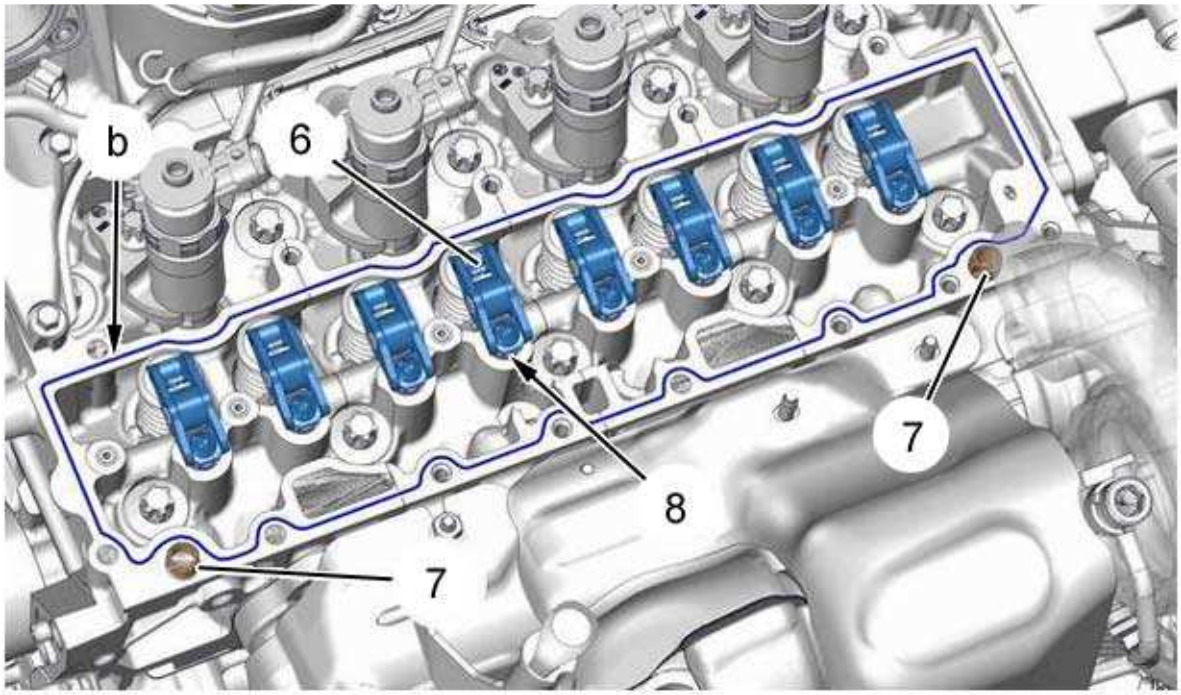

b1dg0x8d

WARNING : Check the presence of the centring pins (7)

Check the condition of the roller valve rockers and of the hydraulic cam followers.

Remove :

- The roller valve rockers (6)
- The hydraulic followers (8)

Lubricate (With engine oil) :

- The hydraulic followers (8)
- The roller valve rockers (6)

Refit (Observe their original location) :

- The hydraulic followers (8)
- The roller valve rockers (6)

> **WARNING :** The positioning operation must not take longer than 5 minutes

Apply a bead of sealing paste (index "E10") (at "b").

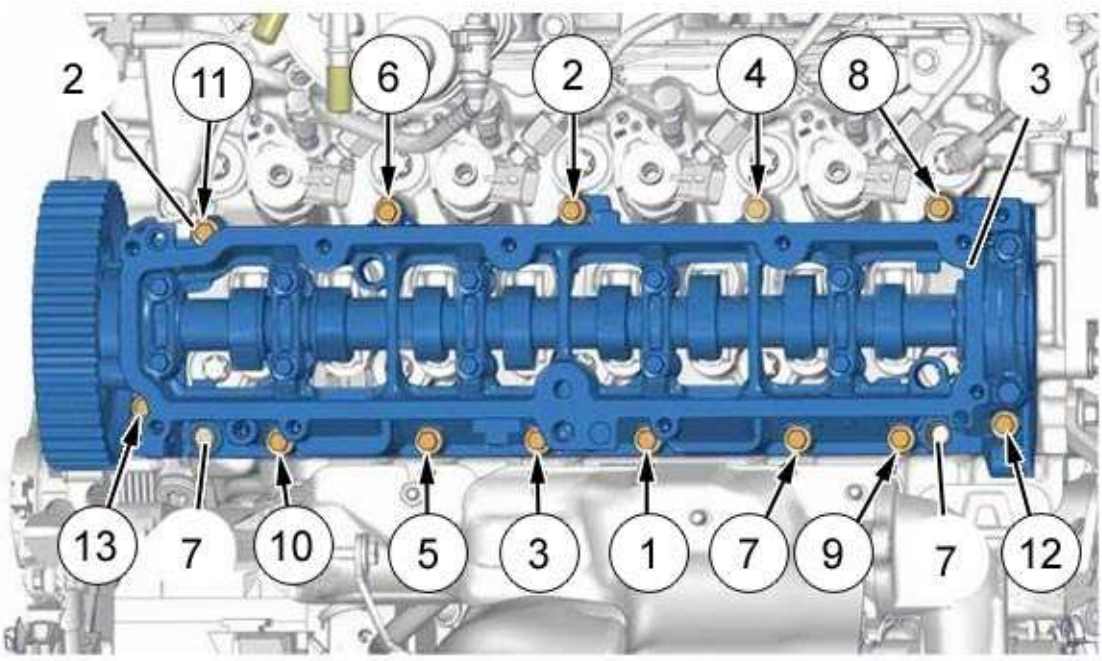

b1dg0x9d

> **WARNING :** The crankshaft pin must be in place

Position the camshaft carrier (3) on the centring pins (7).

Fit the camshaft housing (3).

WARNING : Observe the order of tightening of the camshaft carrier (3) fixing bolts (2)

Method of tightening for the bolts (2) of the camshaft housing (3) (In the order shown) :

- Pre-tightening to torque of the bolts (2)
- Tighten the bolts (2) to the specified torque

Lubricate the camshaft using engine oil.

Refit :

- The camshaft position sensor (4)
- The alternator bracket
- The alternator
- The cylinder head cover

WARNING : Remove the tool [0194-B] from the camshaft pulley (1)

Refit :

- The vacuum pump
- The timing belt
- The air mixer unit
- The air admission bypass valve
- The accessories drive belt
- The air filter box
- The engine style cover (according to equipment)

WARNING : Perform the operations that are required following a reconnection of the ancillaries battery

Reconnect the ancillaries battery.

REMOVAL - REFITTING : CYLINDER HEAD ON THE VEHICLE

ESSENTIAL : Observe the safety and cleanliness instructions

1 - PARTS WHICH MUST ALWAYS BE REPLACED

Description	Quantity
Cylinder head bolts	10
Cylinder head gasket	1

2 - TOOLING

NOTE : Use the approved products

Equipment :

- Dial gauge
- Dial gauge magnetic support
- Set of shims
- Rule for checking flatness
- Approved cleaning product
- Grease index "G12"

Tool	Reference	Description
[0185] 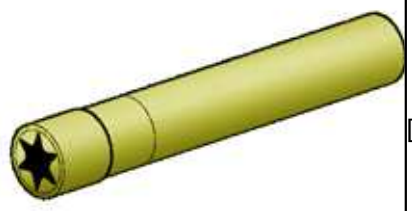 *e5ag07dt*	[0185]	Cylinder head bolt socket
[0153-Q] 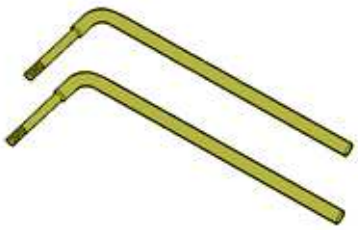 *e5ab0upt*	[0153-Q]	cylinder head releasing levers

3 - REMOVAL

ESSENTIAL : Observe the safety and cleanliness instructions which are specific to high-pressure diesel injection engines (H.D.I.)

Place the vehicle on a two-post ramp.

Disconnect the ancillaries battery.

Remove the under engine protection .

Drain the cooling system.

Take down :

- The engine cover (according to equipment)
- The air filter housing
- The fuel filter
- The exhaust gas recycling module
- The inlet air metering unit
- The air inlet pipe
- The fuel filter support
- The glow plugs
- The fuel injectors
- The timing belt
- The catalytic converter and particle filter assembly
- The turbocharger
- The exhaust manifold
- The alternator and its support (On the left-hand side)
- The camshaft housing
- The thermostat

3 - 1 - CONTINENTAL / SIEMENS assembly

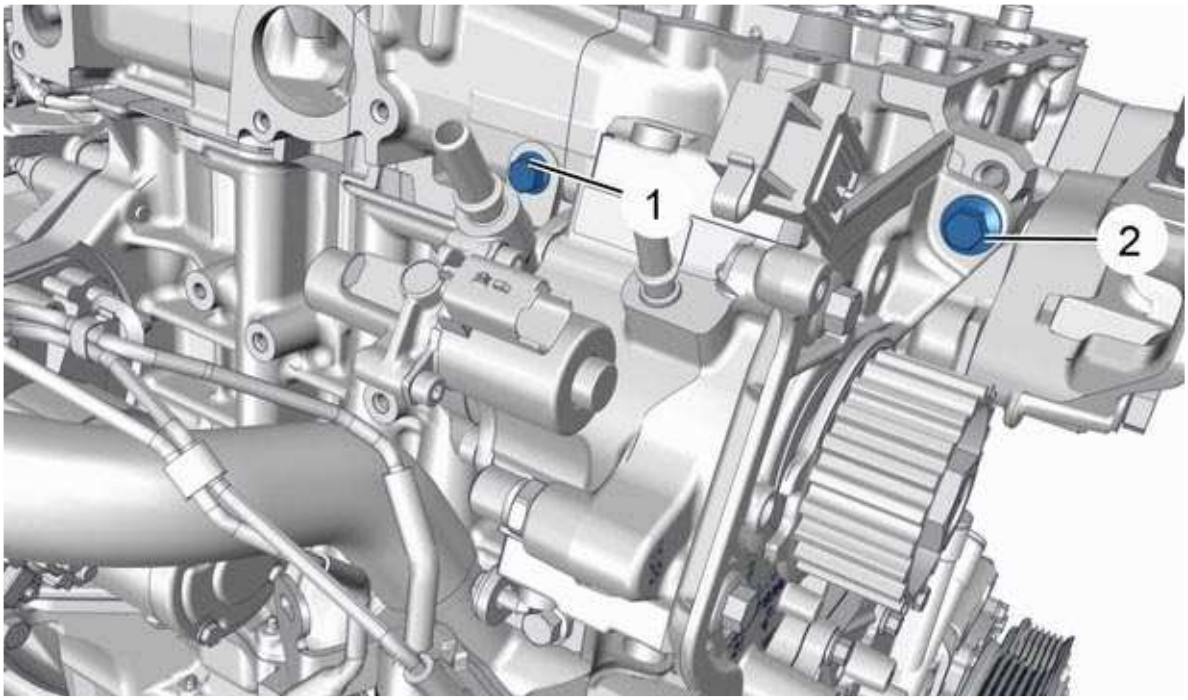

b1dg0acd

Take down :

- The upper fixing bolt (1) from the high-pressure fuel pump rear mounting
- The upper fixing bolt (2) from the high-pressure fuel pump front mounting

3 - 2 - BOSCH assembly

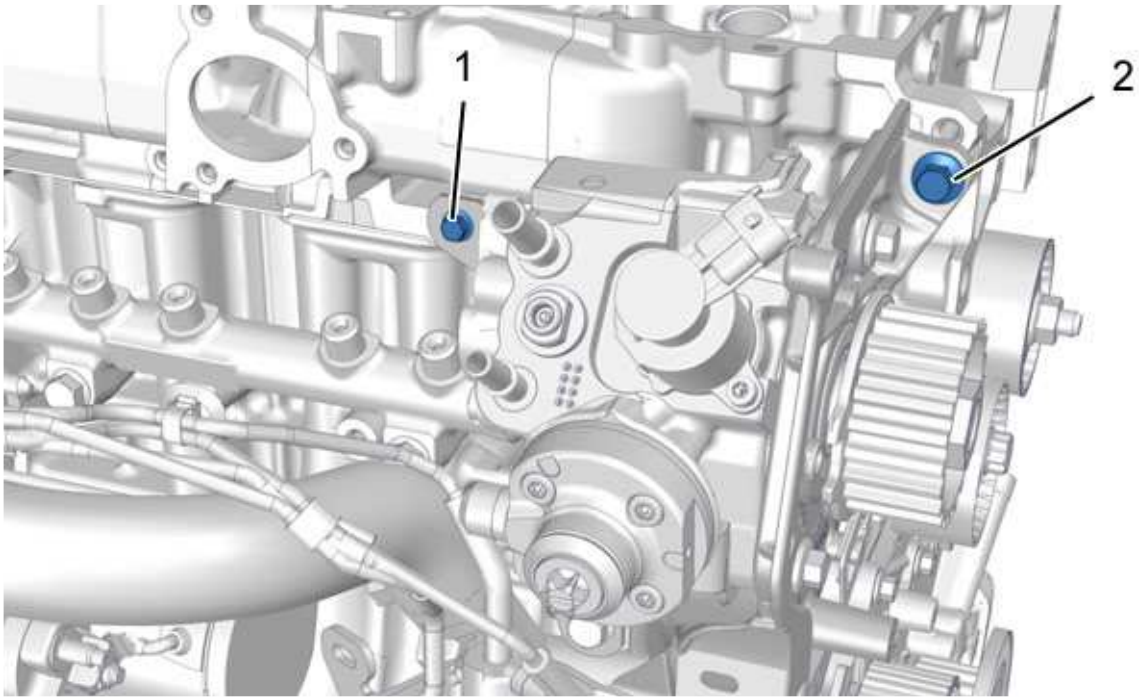

b1dg0h4d

Take down :

- The upper fixing bolt (1) from the high-pressure fuel pump rear mounting
- The upper fixing bolt (2) from the high-pressure fuel pump front mounting

3 - 3 - Common operations

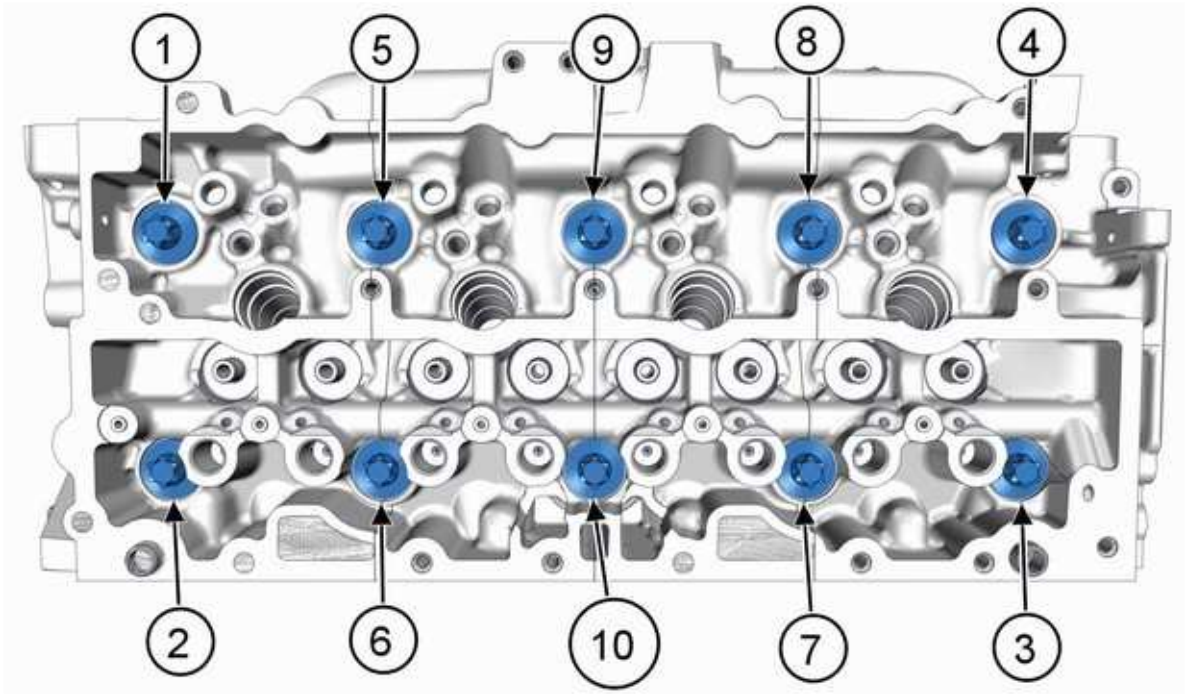

b1dg0add

> **WARNING :** Observe the slackening order

Loosen the cylinder head screws (In the order shown) ; Using the tool [0185].

Remove the cylinder head bolts .

Detach the cylinder head ; Using the tools [0153-Q].

Remove the cylinder head.

4 - CHECK

> **WARNING :** Clean the gasket faces with an approved descaling product. Do not use a cutting or abrasive tool ; The joint faces must not have any trace of knocks or scores

4 - 1 - Checking the flatness

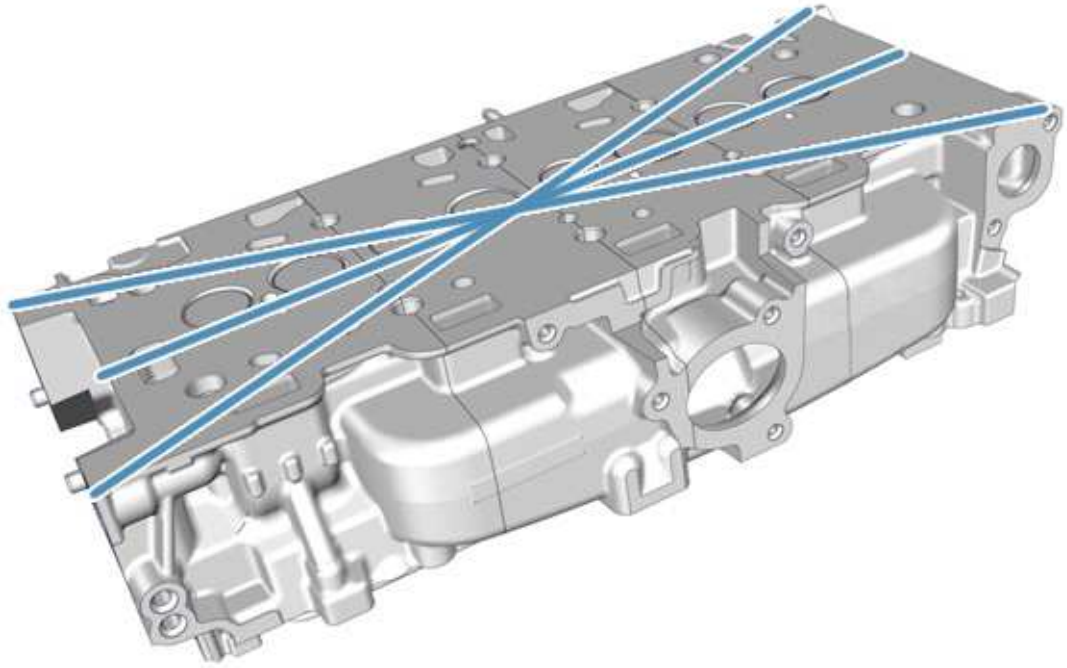

b1dg0ptd

Check the flatness of the cylinder head joint face ; Using a set of shims and a rule.

NOTE : Maximum permissible bow = 0,05 mm

4 - 2 - Checking valve protrusion

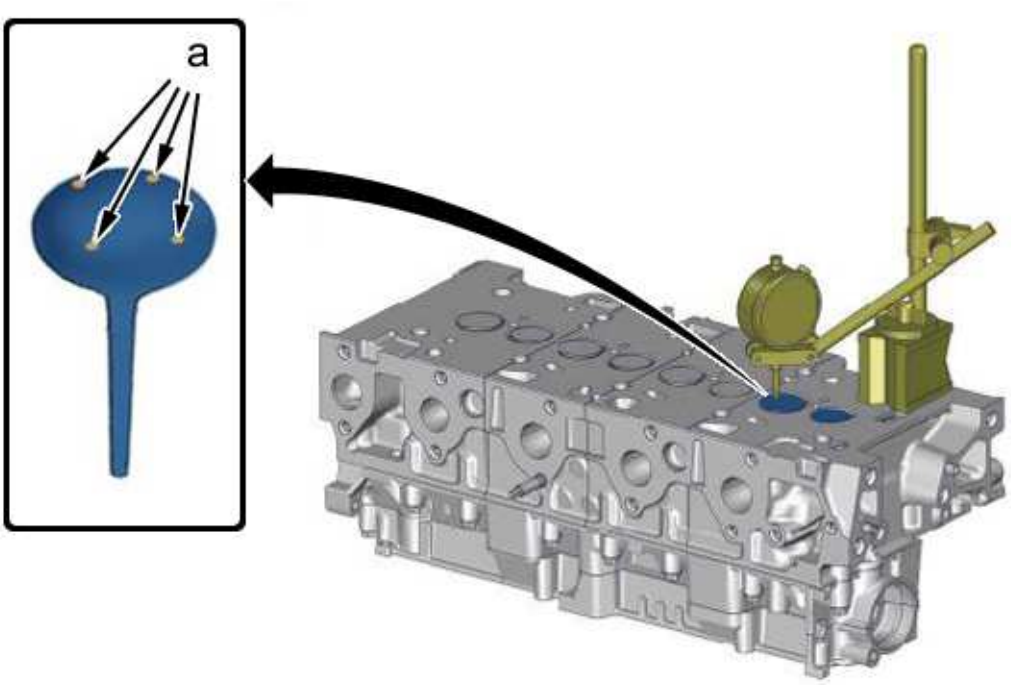

b1dg0q1d

Fit a dial gauge with a magnetic mounting on the cylinder head seal face.

Place the end of the dial gauge on the cylinder head joint face .

Set the dial gauge to zero.

Place the end of the dial gauge on the checking points (at "a").

Calculate the average of the 4 values measured.

Check the pocketing of the valves in relation to the cylinder head face :

- Exhaust valves : 0,6 mm
- Inlet valves : 0,7 mm

NOTE : If the value measured does not correspond to the values indicated, investigate the origin of the fault (measurement error, handling error etc.)

Replace any defective parts (if necessary).

4 - 3 - Checking the protrusion of the pistons

WARNING : Remove the crankshaft immobilisation and locking tool

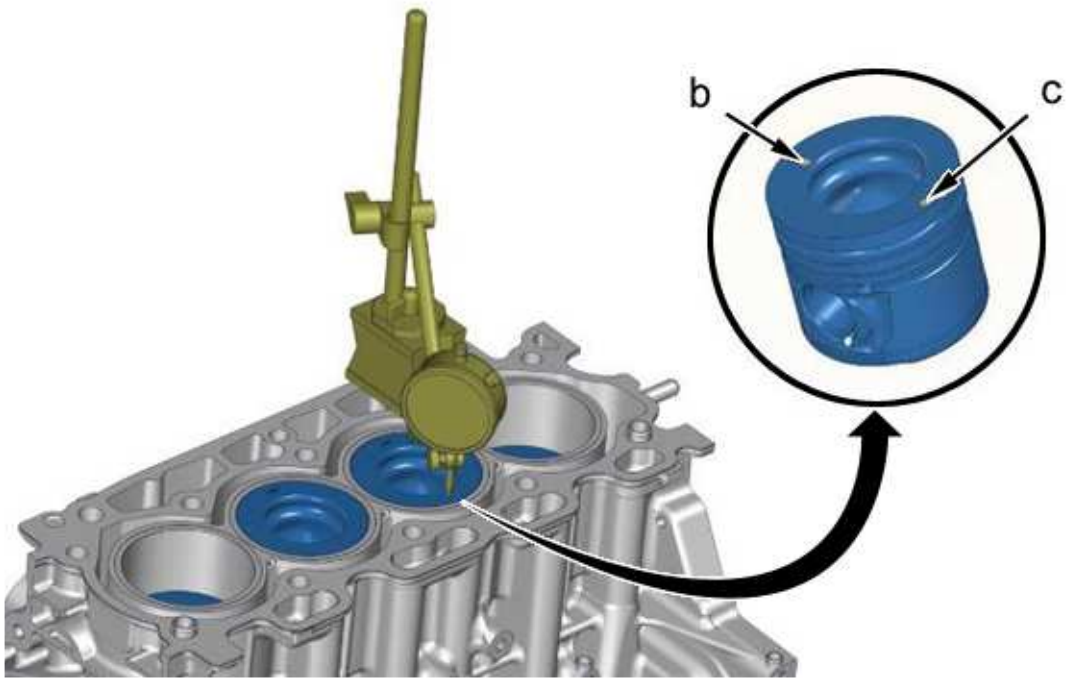

b1dg0q2d

Fit a dial gauge with a magnetic mounting on the seal face of the cylinder block.

Place the end of the dial gauge on the upper surface of the cylinder block.

Set the dial gauge to zero.

Place the end of the dial gauge on one of the checking points (at "b").

Turn the crankshaft to the top dead centre of the piston without going beyond it.

Read the value .

Place the end of the dial gauge on one of the checking points (at "c").

Read the value .

Calculate the average of the 2 values measured.

> **WARNING :** The highest mean value determines the thickness of the cylinder head seal to be fitted

Proceed in the same way for the other pistons.

> **NOTE :** Max. height difference between pistons : 0,10 mm If the value measured does not correspond to the values indicated, investigate the origin of the fault (measurement error, handling error etc.)

Replace any defective parts (if necessary).

4 - 4 - Checking cylinder head bolts before re-use

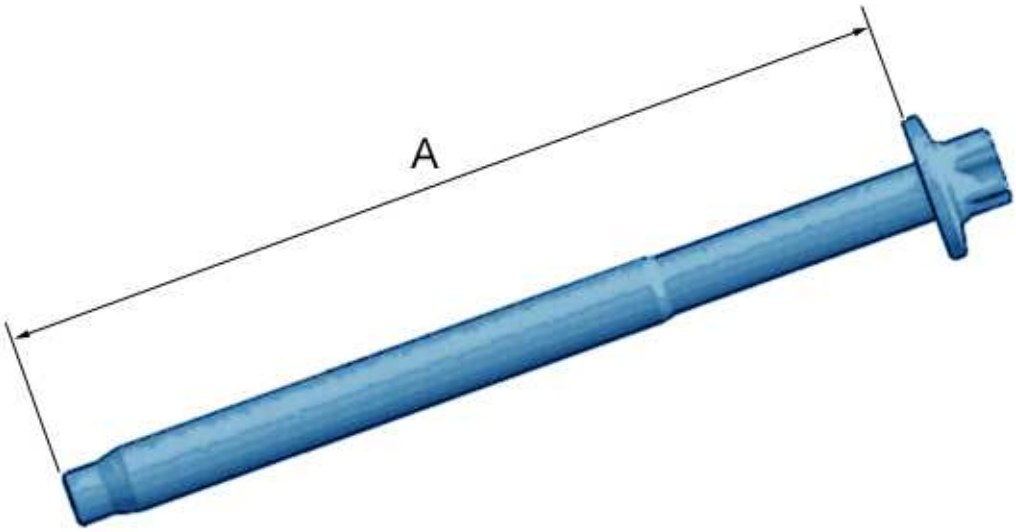

b1dp1zzd

> **WARNING :** The dimension "A" must be less than 149 mm

4 - 5 - Choice of cylinder head gasket

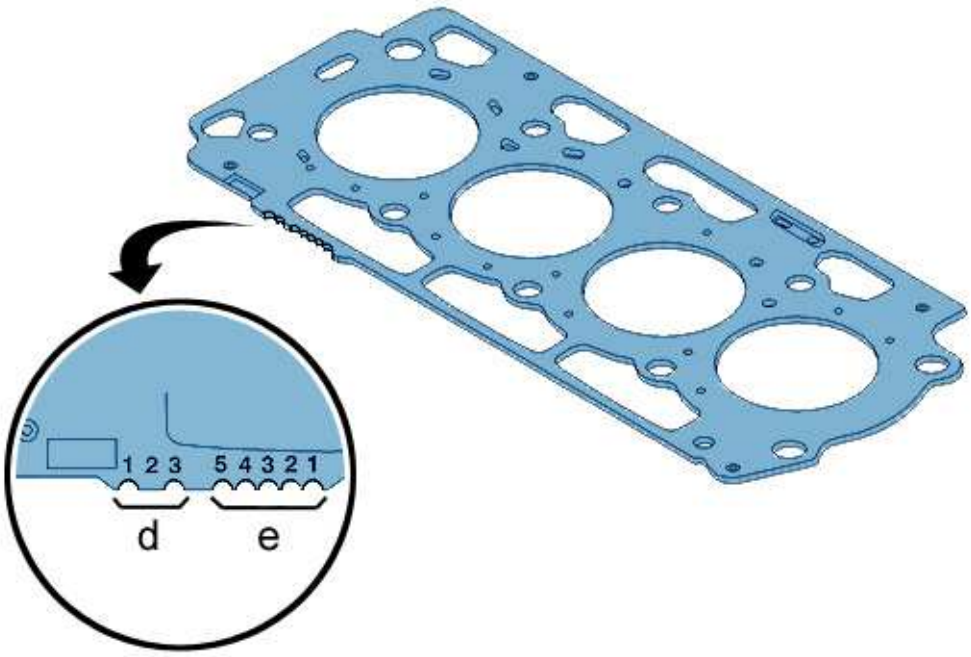

b1dg0ewd

"d" supplier identification.

"e" Thickness identification .

Piston protrusion (mm)	Thickness	No. of holes at "e"
0,685 to 0,734	1,35 mm	(1)
0,533 to 0,634	1,25 mm	(1 + 2)
0,635 to 0,684	1,30 mm	(1 + 2 + 3)
0,735 to 0,784	1,40 mm	(1 + 2 + 3 + 4)
0,785 to 0,886	1,45 mm	(1 + 2 + 3 + 4 + 5)

5 - REFITTING

ESSENTIAL : Observe the safety and cleanliness instructions which are specific to high-pressure diesel injection engines (H.D.I.)

WARNING : Observe the tightening torque values

WARNING : Clean the gasket faces with an approved descaling product. Do not use a cutting or abrasive tool. The joint faces must not have any trace of knocks or scores

Pass a tap into the cylinder head securing holes .

WARNING : Refit the crankshaft pulley pin

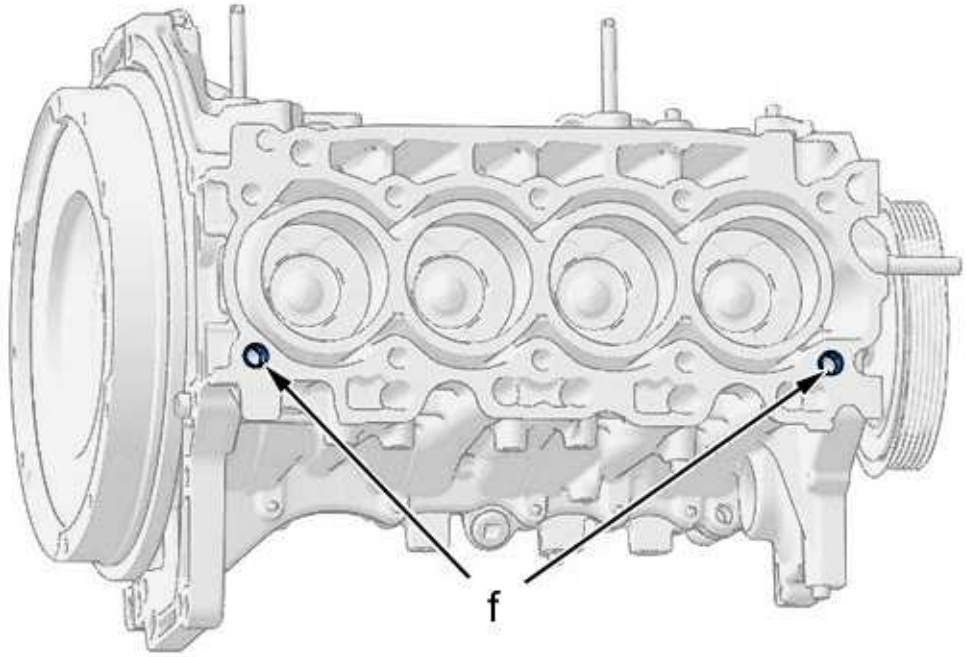

b1dg0exd

Check the presence of the centring pins (at "f").

Check that the crankshaft setting rod engages freely in its location.

WARNING : Check the positioning of the gasket when refitting the cylinder head. Coat the threads and the contact area under the bolt head with "G12" grease (Refer to the products catalogue)

Fit a new cylinder head gasket of a thickness determined in advance (observing the direction of fitting).

Refit the cylinder head.

Brush the threads of the cylinder head bolts.

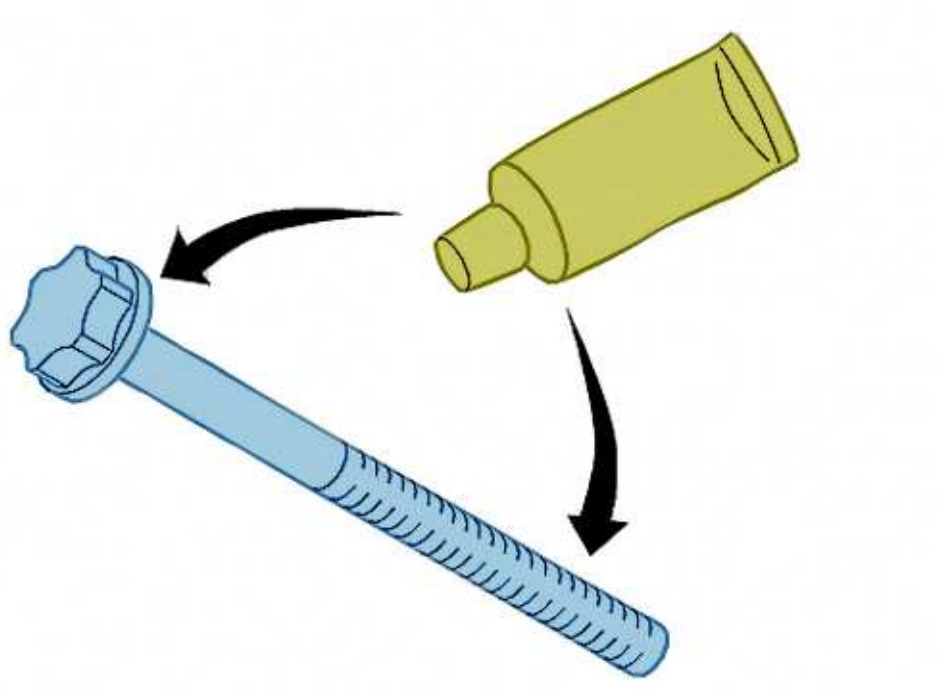

b1dp1z3d

Fit the cylinder head bolts coated with "G12" on the threads and under the bolt heads.

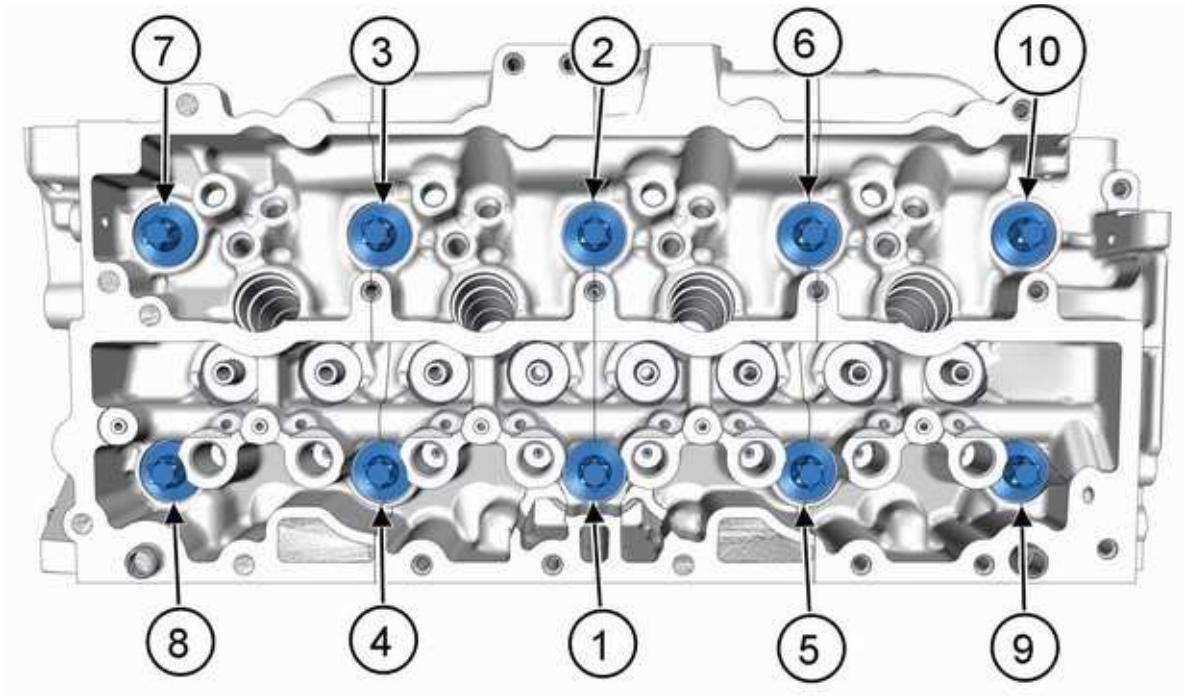

b1dg0ajd

WARNING : Follow the tightening sequence

Tighten the cylinder head bolts in the order indicated ; Using the tool [0185].

Fit :

- The upper fixing bolt (2) from the high-pressure fuel pump front mounting
- The upper fixing bolt (1) from the high-pressure fuel pump rear mounting
- The exhaust manifold
- The thermostat
- The camshaft housing
- The alternator and its support
- The turbocharger
- The catalytic converter and particle filter assembly
- The timing belt
- The fuel injectors
- The glow plugs
- The fuel filter support
- The air inlet pipe
- The inlet air metering unit
- The exhaust gas recycling module
- The fuel filter
- The air filter housing

> **WARNING :** Perform the operations that are required following a reconnection of the ancillaries battery

Reconnect the ancillaries battery.

Fill and bleed the cooling system.

6 - ADDITIONAL OPERATIONS

Start the engine.

Check the absence of leaks.

Switch off the engine.

Fit :

- The engine undershield
- The engine cover (according to equipment)

RECOMMENDED CONSUMABLES : MECHANICAL

1 - CHAPTERS

2 - Particle filter additive.

3 - Air conditioning.

4 - Brake fluid.

5 - Product of a working on the cylinder head.

6 - Sealing compounds.

7 - Releasing agents.

8 - Grease, lubricant...

9 - Hydraulic mineral fluid.

10 - Cleaning parts.

11 - Leak detector.

12 - Maintenance - absorber.

2 - PARTICLE FILTER ADDITIVE

Description	Index	Reference	Product : Name - Type - Packaging - Data - Applies to	Supplier
Additives for particle filters (1st generation)	A1	9736 65	Additive EOLYS DPX 42 - Cardboard box containing a 1 litre container and a 1 litre filling kit Use : Favour regeneration of the particle emission filter The additive EOLYS DPX 42 must be used for diesel vehicles with particle filter up to RPO 9491	RODHIA
		9979 95	Additive EOLYS DPX 42 Cardboard box containing a 4,5 litre container and a 5 litre filling kit Use : Favour regeneration of the particle emission filter The additive EOLYS DPX 42 must be used for diesel vehicles with particle filter up to	RODHIA

			RPO 9491	
Additives for particle filters (3rd generation)	A3	9736 A0	Additive EOLYS POWERFLEX - Cardboard box containing a 1 litre container and a 1 litre filling kit Use : Favour regeneration of the particle emission filter L'additif EOLYS POWERFLEX doit être utilisé pour les véhicules diesel équipés d'un filtre à particules : - EURO 4 - EURO 5 depuis le 1/07/2010 - EURO 6 The additive EOLYS POWERFLEX does not replace and must not be mixed with the additive EOLYS DPX 42 Additives EOLYS POWERFLEX and F7995 cannot be mixed with each other	RODHIA
		9736 A1	Additive EOLYS POWERFLEX - Cardboard box containing a 3 litre container and a 3 litre filling kit Use : Favour regeneration of the particle emission filter L'additif EOLYS POWERFLEX doit être utilisé pour les véhicules diesel équipés d'un filtre à particules : - EURO 4 - EURO 5 depuis le 1/07/2010 - EURO 6 The additive EOLYS POWERFLEX does not replace and must not be mixed with the additive EOLYS DPX 42 Additives EOLYS POWERFLEX and F7995 cannot be mixed with each other	RODHIA
			Additive INFINEUM F7995 - Cardboard box containing a 1 litre container and a 1 litre filling kit	

		9736 98	Use : Favour regeneration of the particle emission filter L'additif F7995 doit être utilisé pour les véhicules diesel équipés d'un filtre à particules : - EURO 4 - EURO 5 depuis le 1/07/2010 - EURO 6 The additive F7995 does not replace and must not be mixed with the additive EOLYS DPX 42 Additives F7995 and EOLYS POWERFLEX cannot be mixed with each other	INFINEUM
		9736 97	Additive INFINEUM F7995 - Cardboard box containing a 3 litre container and a 3 litre filling kit Use : Favour regeneration of the particle emission filter L'additif F7995 doit être utilisé pour les véhicules diesel équipés d'un filtre à particules : - EURO 4 - EURO 5 depuis le 1/07/2010 - EURO 6 The additive F7995 does not replace and must not be mixed with the additive EOLYS DPX 42 Additives F7995 and EOLYS POWERFLEX cannot be mixed with each other	INFINEUM

3 - AIR CONDITIONING

Description	Index	Reference	Product : Name - Type - Packaging - Data - Applies to	Supplier
	B1	9776 AC	Refrigerant R134A - 1 bottle of 13 kg	GAZECHIM

			Use : Recharge the air conditioning circuits specific to this product	
Refrigerant	B2	1611177980	Refrigerant 1234YF - 1 bottle of 5 kg Use : Recharge the air conditioning circuits specific to this product	HONEYWE
Oil for air conditioning compressor	B3	9979 A8	MA 68 EV - 1 250 ml flask Oil for air conditioning compressor specific to C-Zéro - ION	CEPAC
	B4	16 098 937 80	SPA2 - 1 250 ml flask Oil for air conditioning compressor with variable capacity	SANDEN
	B5	E162914	SP20 - 1 250 ml flask Oil for air conditioning compressor with fixed capacity (R134A gas)	SANDEN
	B6	9735 EK	S10X - 1 250 ml flask Oil for air conditioning compressor specific to 4007 - C-Crosser	CEPAC
	B7	9730 A9	ZXL 200PG - 1 250 ml flask Oil for air conditioning compressor specific to 107 - CITROËN C1	VALEO
	B8	1609893880	VC 200YF - 1 250 ml flask Oil for air conditioning compressor with fixed capacity (1234YF gas)	VALEO
	B9	1612187880	HD 100 - 1 250 ml flask Oil for air conditioning compressor with fixed capacity (1234YF gas) Vehicle specific PEUGEOT 301 - CITROËN C-ELYSEE	SHRIEVE

4 - BRAKE FLUID

Description	Index	Reference	Product : Name - Type - Packaging - Data - Applies to	Supplier
Brake fluid	C1	1610725580	Safebrake 16M (DOT4 +) - 0,5 litre can Synthetic brake fluid	CLARIANT
		1610726080	Safebrake 16M (DOT4 +) - 5 litre flask Synthetic brake fluid	CLARIANT

5 - PRODUCT OF A WORKING ON THE CYLINDER HEAD

Description	Index	Reference	Product : Name - Type - Packaging - Data - Applies to	Supplier
Detaching of seals and scouring of joint faces	D2	9732 11	LOCTITE 7200 - 1 Aerosol 400 ml Use : Scouring polymerised seals and conventional seals ; Easy removal of stickers, oil and hardened grease, carbon deposits, paint and varnish Use on metal parts Product not advised to be used on plastics	HENKEL
Detaching of seals and scouring of joint faces	D3	16 090 476 80	Super degreaser - 1 5 litre flask Use : Cleaning, degreasing, de-dusting mechanical and electrical parts To do apply to paints, rubbers or alloy wheels	BARDHAL

6 - SEALING COMPOUNDS

Description	Index	Reference	Product : Name - Type - Packaging - Data - Applies to	Supplier
Locking and sealing threaded assemblies (Average resistance)	E3	9731 60	LOCTITE 243 - Anaerobic adhesive - 1 5 ml flask Use : Sealing threaded assemblies and permitting their disassembly	HENKEL
		9732 48	LOCTITE 243 - Anaerobic adhesive - 1 24 ml flask Use : Sealing threaded assemblies and permitting their disassembly	HENKEL
		9735 P2	TB1324 - Anaerobic adhesive - 2 boxes of 50 ml Use : Sealing threaded assemblies and permitting their disassembly	CEPAC
Sealing of unions (Average resistance)	E4	9731 4C	LOCTITE 577 - Anaerobic adhesive - Cardboard box containing 12 bottles of 50 ml Use : Sealing metal threaded tubes and unions and permitting their disassembly	HENKEL

			Use on stainless steels without a surface activator	
Locking and sealing cylindrical assemblies (High resistance)	E5	9732 47	LOCTITE 648 - Anaerobic adhesive - 1 24 ml flask Use : Fixing permanent cylindrical assemblies with little clearance (Force-fitting, bearings, grooved shafts, bronze bushes, etc.) Special feature : Excellent resistance to corrosion and to high temperatures	HENKEL
Locking and sealing threaded assemblies (High resistance)	E6	9733 10	LOCTITE 271 - Anaerobic adhesive - 1 50 ml flask Use : Sealing and locking permanent threaded assemblies subjected to impacts (Studs and bolts on cylinder block, gearbox, rear axle, etc.)	HENKEL
		9731 52	LOCTITE 271 - Anaerobic adhesive - 1 5 ml flask Use : Sealing and locking permanent threaded assemblies subjected to impacts (Studs and bolts on cylinder block, gearbox, rear axle, etc.)	
		9735 P1	TB1305 - Anaerobic adhesive - 2 boxes of 50 ml Use : Sealing studs and bolts for a definitive assembly	CEPAC
Sealing of seal faces replacing conventional seals	E7	9735 58	LOCTITE 518 - Anaerobic adhesive - 1 25 ml syringe Use : For bringing together metal surfaces with little clearance	HENKEL
Sealing porous points on aluminium	E8	9732 17	LOCTITE 3455 - Epoxide resin 2K - 1 24 ml syringe Resin charged with aluminium powder	HENKEL

based housings			Use : Bonding and repairing aluminium or light alloy parts Can be sand-blasted, machined or drilled	
Sealing of seal faces that are subjected to high pressures and strong vibrations	E10	9731 AR	LOCTITE - Grey silicone - 1 100 ml tube Use : Sealing joint faces (Maximum thickness 1)	HENKEL
		9731 62	Blue car sealer silicone AJ44 - 1 45 g tube Use : Sealing flat surfaces (Valve rocker covers, oil sumps, timing covers, gearbox covers, coolant pumps) Effectiveness of the product between - 54 and 204°C	HENKEL
		9731 07	Blue car sealer silicone AJ44 - 1 100 ml tube Use : Sealing flat surfaces (Valve rocker covers, oil sumps, timing covers, gearbox covers, coolant pumps) Effectiveness of the product between - 54 and 204°C	HENKEL
		9731 AQ	LOCTITE 5940 - Black silicone - 1 100 g tube Use : Sealing and bonding joint faces on all types of housing and cover (Maximum thickness 8)	HENKEL
		9735 N5	Metal superjoint - Sealing paste - Sealing mastic - Pressurised cartridge of 225 ml	CEPAC
		9982 34	LOCTITE 5980 - Silicone - Pressurised cartridge of 200 ml Use : Sealing sheet metal housings (Product remains flexible and oil resistant)	HENKEL
			LOCTITE 3498 - Sealing mastic for exhaust - 1 150 g	

Sealing exhaust unions (except exhaust ball-joints)	E11	9735 C7	tube Use : Sealing exhaust gas circuit unions Product withstands high pressures and temperatures (800°C)	HENKEL
Strengthening of fixed assembly (Average resistance)	E12	9733 68	LOCTITE 549 - Anaerobic adhesive - 1 50 ml tube Use : Sealing of assemblies with little clearance between surfaces or rigid metal joint faces : Joint faces of air conditioning compressor, pump, thermostat, etc. Sealing at low pressure, immediately after assembly	HENKEL

7 - RELEASING AGENTS

Description	Index	Reference	Product : Name - Type - Packaging - Data - Applies to	Supplier
Multifunction lubricating releasing agent	F1	16 090 473 80	Lubricating releasing agent- 1 Aerosol 500 ml Use : Releasing and lubricating mechanical assemblies (Dissolves rust and oxidised grease)	BARDHAL
Electrical contact cleaner	F2	16 090 470 80	Electrical contact cleaner - Aerosol 400 ml Use : Clean the electrical contacts (Drive out water, protect from humidity and degrease)	BARDHAL
Mechanical releasing agent with cold effect	F3	9735 EE	Mechanical releasing agent - Aerosol 400 ml Use : Releasing and lubricating difficult mechanical assemblies (fuel injectors in cylinder head) by cryogenic effect -50°C	BARDHAL

8 - GREASE- LUBRICANT

Description	Index	Reference	Product : Name - Type - Packaging - Data - Applies to	Supplier
Grease with high adhesive capacity	G1 G7	9735 D4	TOTAL - MARSON SY2 - 1 250 ml tube Multifunction synthetic grease Use : Greasing mechanisms subjected to high pressures and splashes of water (Anti-roll bar bearing, etc.)	CEPAC
Grease resistant to high temperatures	G2 G4	9735 N4	LUBRITHERM - Cardboard box containing 12 tubes of 20 g Use : Greasing and preventing seizing of parts subjected to corrosion and differences in temperature (Spark plugs, exhaust swivel joint, etc.)	CEPAC
Lubricant for arduous conditions	G3 G9	9731 89	MOLYKOTE BR2 PLUS Use : Lubricating mechanisms subjected to splashes of water and high pressures or temperatures (Wheel speed sensor, etc.)	CEPAC
Multifunction grease intended for routine work	G6	9735 D1	TOTAL N4128 - Universal grease - 1 Aerosol 400 ml Universal grease, does not stain Use : Greasing locks, hinges, wheel bolts, battery terminals, etc.	CEPAC
		9984 88	TOTAL N4128 - Universal grease - 1 250 g tube Universal grease, does not stain Use : Greasing locks, hinges, wheel bolts, battery terminals, etc.	
Grease for			MOLYKOTE D321R - Anti-friction coating - 1 Aerosol 400 ml Use : Lubricating metal parts	

fitting cylinder head bolts	G10	9732 04	moving slowly and under high load (Cylinder head bolts) Good resistance to high pressures and temperatures	CEPAC
Lubricant for window slide seals	G11	9735 Y7	KRITOX GPL 105 - Lubricant - 1 30 ml flask Use : Lubricating mobile glass in sliding door seals	CEPAC
Grease for flat surfaces	G12	9731 89	MOLYKOTE BR2 PLUS Use : Lubricating mechanisms subjected to splashes of water and high pressures or temperatures	CEPAC
		9732 04	MOLIKOTE D321R - Anti-friction coating - 1 Aerosol 400 ml Use : Lubricating metal parts moving slowly and under high load Good resistance to high pressures and temperatures	CEPAC
Multifunction grease : Steering rack - Driveshafts	G13	9735 EQ	TOTAL N3945 - 1 250 g tube Use : Greasing drive shafts of type RZEPPA Good mechanical and corrosion resistance	CEPAC
		3299 05	TOTAL N30645 - 1 80 gramme carton Universal grease for all applications For drive shafts JB3 and JB4	TOTAL
Grease for surfaces of camshaft bearings	G14	9732 05	MOLYKOTE G - Rapid plus - 1 Aerosol 400 ml Adhesive grease for fitting all mechanical parts Use : Greasing, on putting into service, all rotating mechanical parts, before final lubrication	CEPAC

9 - HYDRAULIC MINERAL FLUID

Description	Index	Reference	Product : Name - Type - Packaging - Data - Applies to	Supplier
Hydraulic fluid for hood with electric motor	M1	9735 57	EQUIVIS XV 32 - 1 250 ml flask Special oil for hood electrohydraulic pump for 205, 306 cabriolet, 307 CC, 308 CC vehicles	CEPAC
Hydraulic fluid for retractable rigid roof	M2	9734 N0	EQUIVIS ZS15 - 1 250 ml flask Special oil for topping up retractable roof hydraulic mechanisms for 206 CC and 207 CC vehicles	CEPAC

10 - CLEANING PARTS

Description	Index	Reference	Product : Name - Type - Packaging - Data - Applies to	Supplier
Degreasing product (For container and spray)	N1	9736 46	LOTIWAR TCE 10 - Mechanical cleaner - 1 20 litre flask Use : Cleaning, degreasing, de-dusting mechanical and electrical parts	ABAX
		9731 98	LOTIWAR TCE 10 - Mechanical cleaner - 1 Drum of 210 litres Use : Cleaning, degreasing, de-dusting mechanical and electrical parts	ABAX

11 - LEAK DETECTOR

Description	Index	Reference	Product : Name - Type - Packaging - Data - Applies to	Supplier
Tyre leak detector	S1	9733 07	LOCTITE 7100 - 1 Aerosol 450 ml Air or gas leak detector	HENKEL
Hydraulic leak detector	S2	9984 83	Detector D100 - 1 Aerosol 300 ml White detector used for detecting hydraulic leaks	CEPAC

12 - MAINTENANCE - ABSORBER

Description	Index	Reference	Product : Name - Type - Packaging - Data - Applies to	Supplier
Absorber for			PYROSOL - 1 30 litre bag Fire-resistant sawdust in granules for	

floor	P1	1606239080	absorbing liquids (Oils, aqueous solutions, etc.). Product also used for the return of out of service batteries, from electric vehicles	FCPE
Absorber for urea solution (Type Adblue)	P2	1612910580	Absorbent paper - Wallet of 2 sheets 40 x 45 cm Use : To protect the interior of the boot when filling the urea reservoir	MP-HYGIENE

REMOVING - REFITTING : CAMSHAFT

ESSENTIAL : Observe the safety and cleanliness recommendations

1 - PARTS WHICH MUST ALWAYS BE REPLACED

Designation	Quantity
Camshaft oil seal	1
Cylinder head cover gasket	1

2 - TOOLING

tool	Reference	Designation
[0194-N] 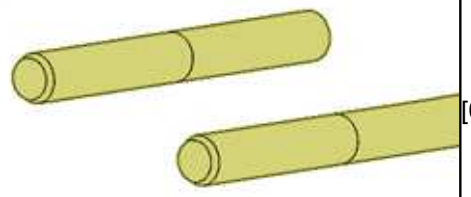 *e5ab08ut*	[0194-N]	Camshaft carrier positioning tool
[0132-AA] 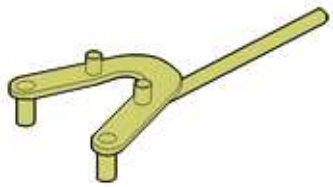 *e5ab08vt*	[0132-AA]	Immobilisation tool
[0194-B] 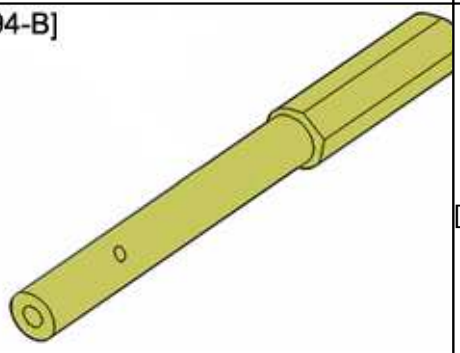 *e5ab08wt*	[0194-B]	Setting pin for camshaft pulley

3 - REMOVING

ESSENTIAL : Observe the safety and cleanliness instructions which are specific to high-pressure diesel injection engines (H.D.I.)

Disconnect the ancillaries battery.

Remove :

- The engine style cover (according to equipment)
- The air filter box
- The accessories drive belt
- The air mixer unit
- The air admission bypass valve
- The timing belt

WARNING : Fit the upper right side engine mounting

Remove the exhauster .

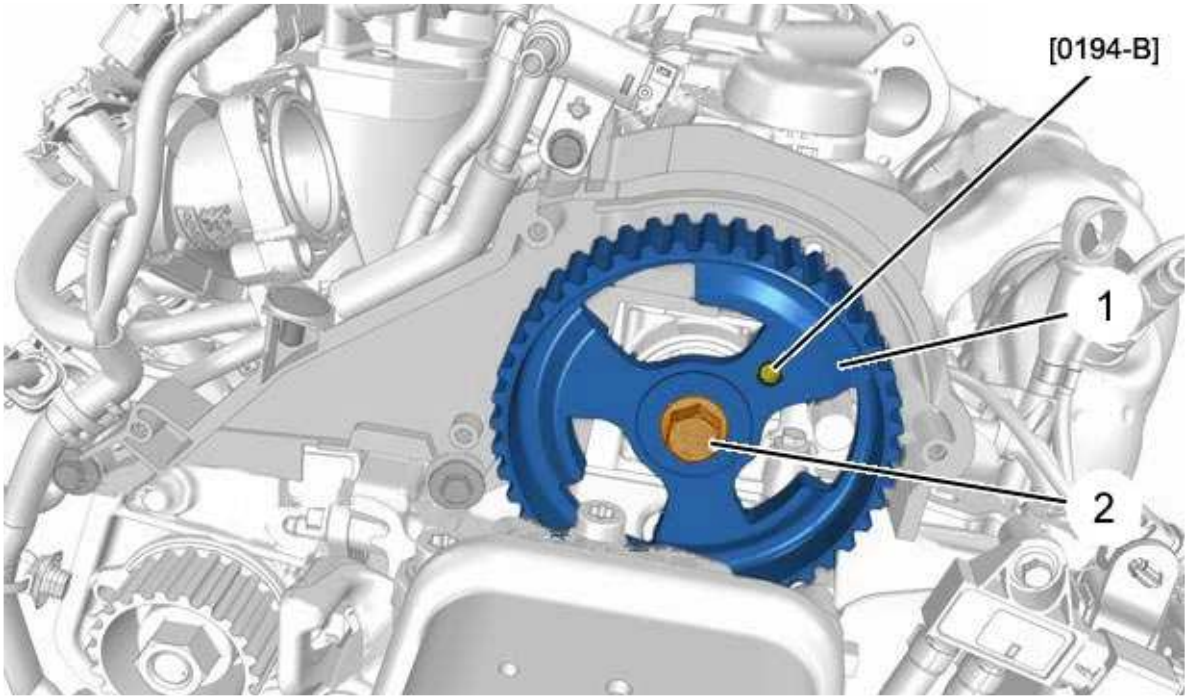

b1dg0xad

WARNING : Remove the camshaft rod [0194-B]

Immobilise the camshaft pulley (1) ; Using tool [0132-AA].

Remove :

- The (2) bolt
- The camshaft pulley (1)

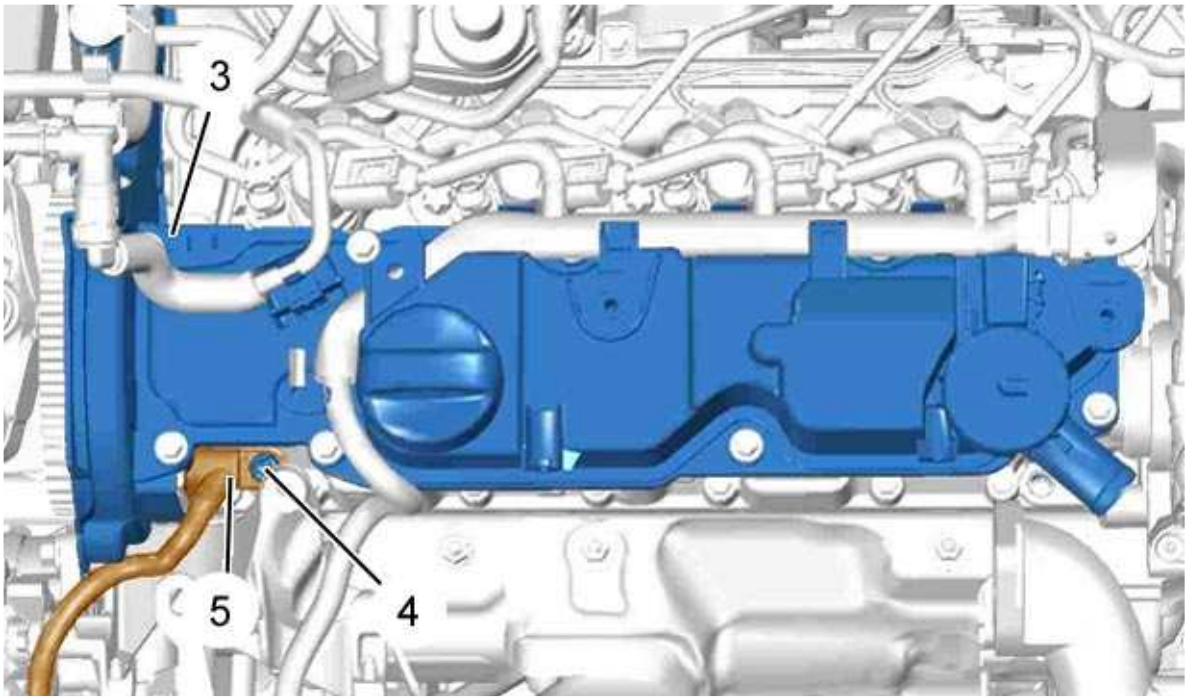

b1dg0xbd

Remove the bolt (4) from the camshaft position sensor (5).

Push back the camshaft position sensor (5).

Remove the cylinder head cover (3).

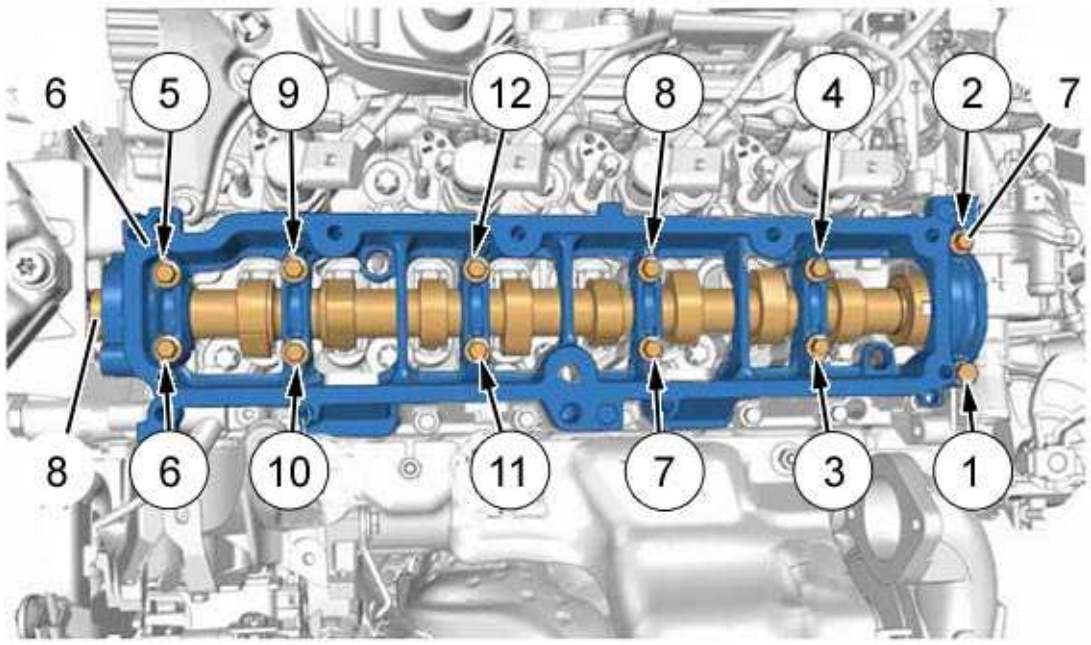

b1dg0xcd

WARNING : The joint faces of the camshaft upper main bearing cap casing (6) must not bear any signs of knocks or scratches

WARNING : Proceed bolt by bolt in the order shown

Remove :

- The bolts (7) of the camshaft upper main bearing cap casing (6) (In the order shown)
- The camshaft upper main bearing cap casting (6)
- The camshaft (8)

4 - REFITTING

ESSENTIAL : Observe the safety and cleanliness instructions which are specific to high-pressure diesel injection engines (H.D.I.)

WARNING : Adhere to the tightening torques

WARNING : Clean the sealing faces with the approved product "D2". Do not use a cutting or abrasive tool. The seal faces should not show any traces of impacts or scratches

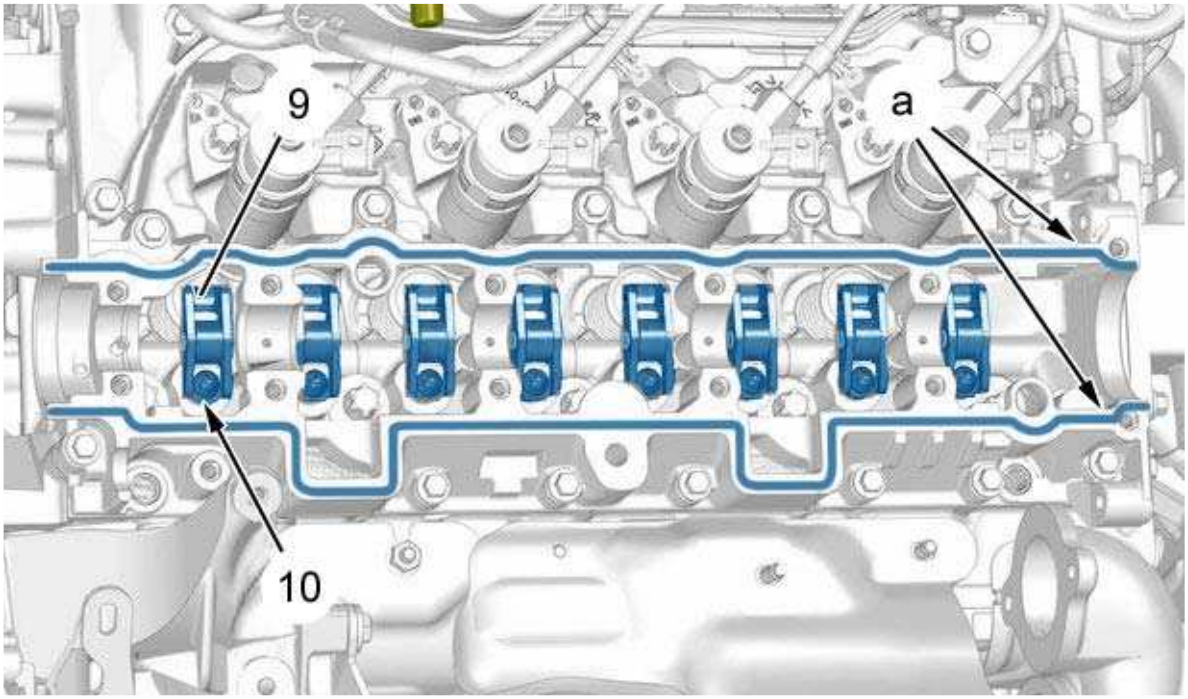

b1dg0xdd

WARNING : The crankshaft pin must be in place

Remove :

- The roller valve rockers (9)
- The hydraulic followers (10)

Lubricate (With engine oil) :

- The hydraulic followers (10)
- The roller valve rockers (9)

Check the condition of the roller cam followers (9) and of the hydraulic tappets (10).

Refit (Observe their original location) :

- The hydraulic followers (10)
- The roller valve rockers (9)

Apply a bead of sealing paste "E10" at "a" on the edge of the joint faces.

WARNING : The positioning operation must not take longer than 5 minutes

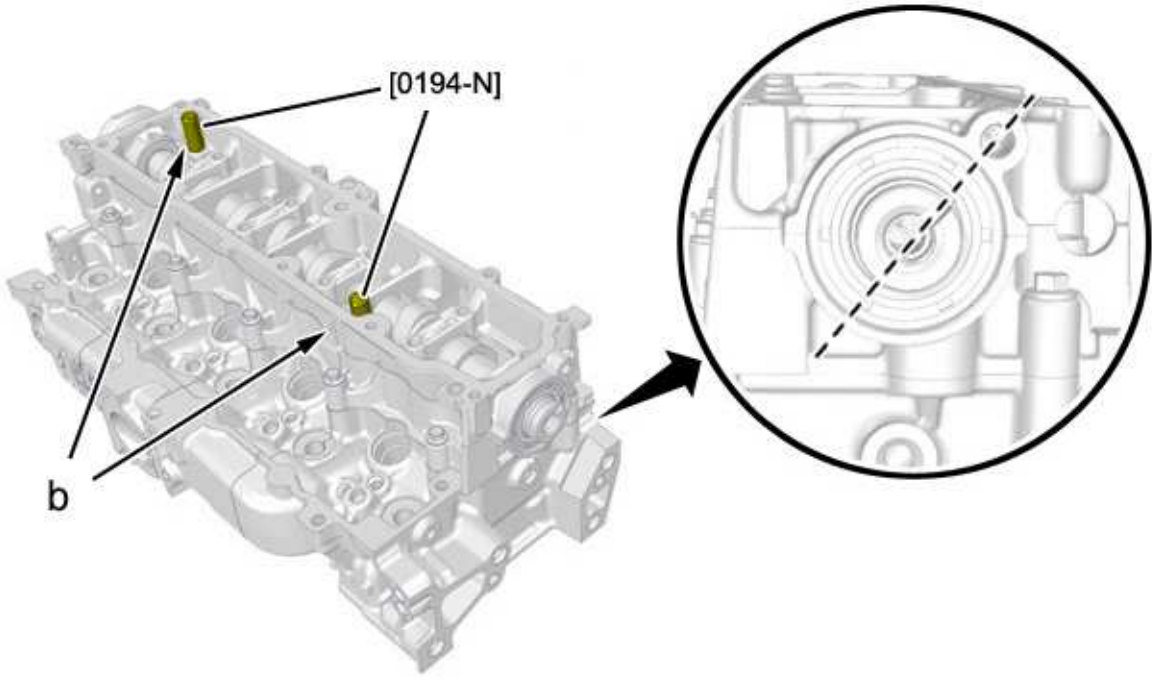

b1dg0xed

WARNING : When refitting, place the camshaft pulley notch (1) at the top (In accordance with the illustration above)

WARNING : Place the tool [0194-N] (at "b") to centre the camshaft upper main bearing cap casing

Refit :

- The camshaft (8)
- The camshaft upper main bearing cap casting (6) ; Using the tools [0194-N]

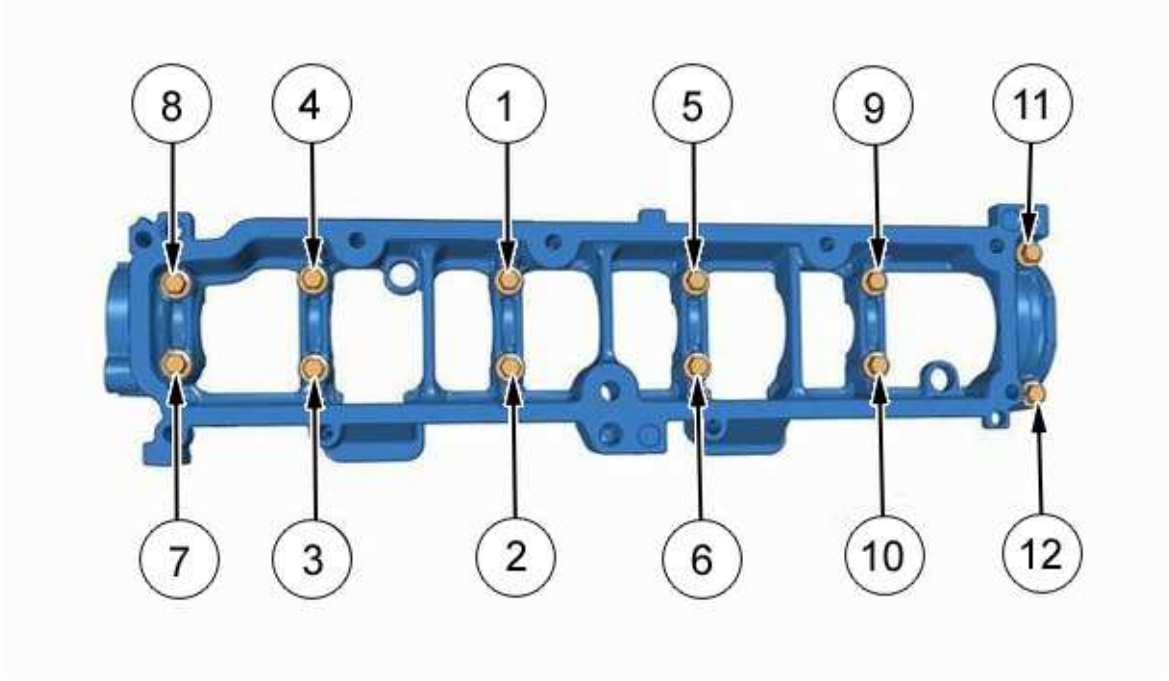

b1dg0g3d

WARNING : Observe the order of tightening of the camshaft upper main bearing cap casing (6) fixing bolts (7)

Tightening method for the screws (7) (In the order shown) :

- Pre-tightening to torque of the bolts (7)
- Remove the tools [0194-N]
- Tightening of screws (7)

WARNING : Fit a new camshaft sealing ring

Lubricate the camshaft (8) using engine oil.

Fit the cylinder head cover (3) (with a new seal).

Position the camshaft position sensor (5).

Refit bolt (4) to the camshaft position sensor (5).

Refit :

- The camshaft pulley (1)
- The new bolt (2) (without tightening)

Immobilise the camshaft pulley (1) ; Using tool [0132-AA].

Tighten the bolt (2).

Remove the tool [0132-AA].

Remove the right-hand upper engine mounting .

Refit :

- The vacuum pump
- The timing belt
- The air admission bypass valve
- The air mixer unit
- The accessories drive belt
- The air filter box
- The engine style cover (according to equipment)

> **WARNING :** Perform the operations that are required following a reconnection of the ancillaries battery

Reconnect the ancillaries battery.

REMOVING - REFITTING : CYLINDER HEAD COVER

ESSENTIAL : Observe the safety and cleanliness recommendations

1 - TOOLING

Equipment ; Adjustable mirror.

tool	Reference	Designation
[1617-J] 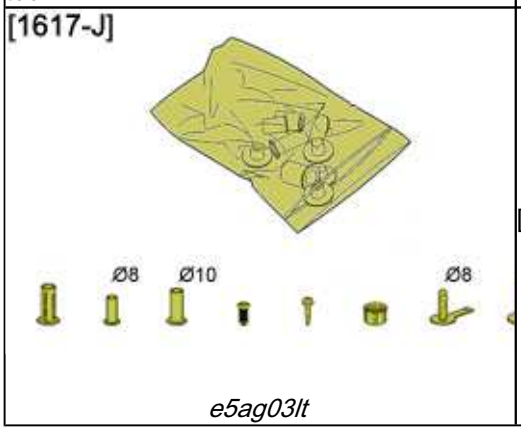 *e5ag03lt*	[1617-J]	The plugs kit HDI

2 - REMOVING

ESSENTIAL : Respect the safety and cleanliness recommendations that are specific to high pressure diesel injection (HDi) engines

Disconnect the ancillaries battery.

WARNING : Plug the turbocharger inlet and outlet openings

Remove (depending on the proximity of the operation zone) :

- The ancillaries battery cover (according to equipment)
- The ancillaries battery
- The ancillaries battery tray (according to equipment)

Remove :

- The engine cover (according to equipment)
- The air filter casing
- The air admission bypass valve
- The air mixer unit

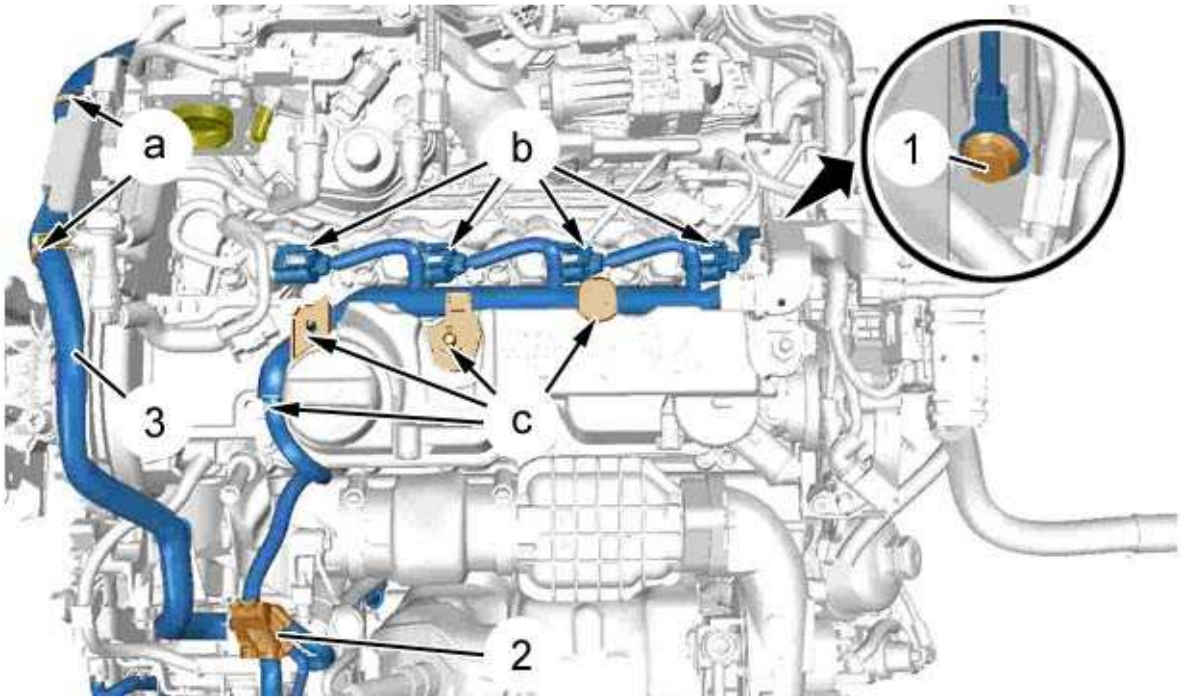

b1dg0wwd

NOTE : Since the screw (1) fixing the electrical harness support is positioned between the engine and the bulkhead, use a mirror to make the operation easier

Remove the bolt (1).

Disconnect injectors (at "b").

Unclip clip (2).

Move aside the harness (3) (at "c").

Unclip the harness (3) (at "a").

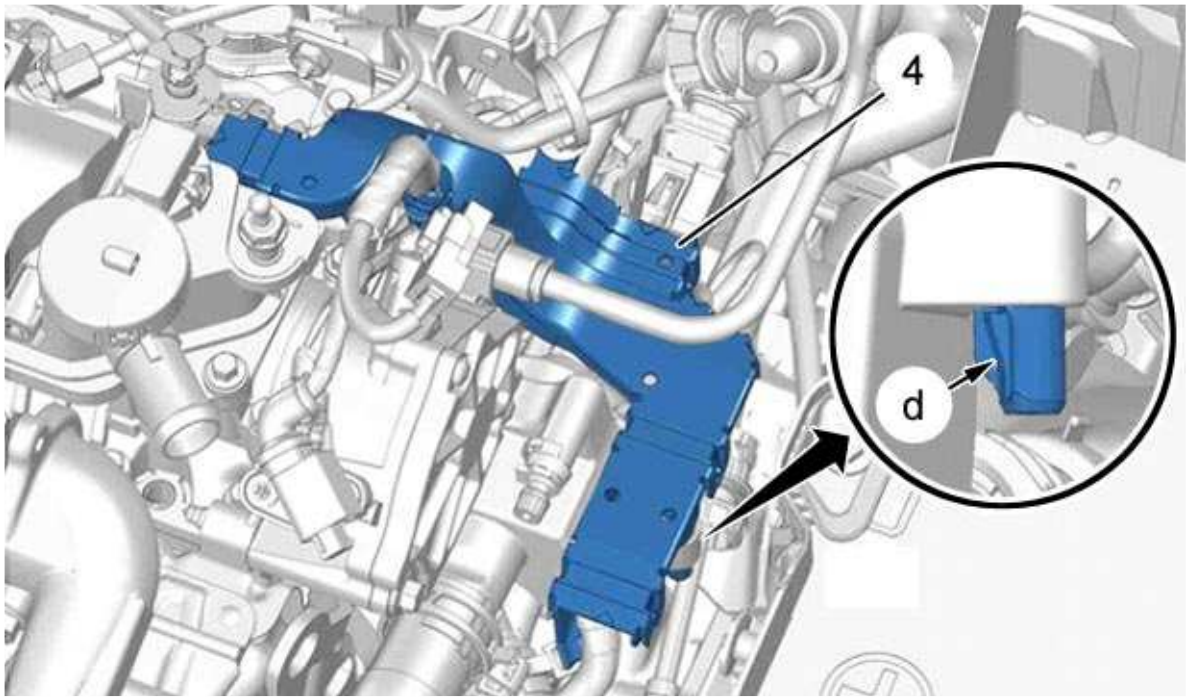

b1dg0wxd

Release the harness support (4) (from below) (at "d") ; Using a small flat screwdriver.

Lift and move aside the harness support (4).

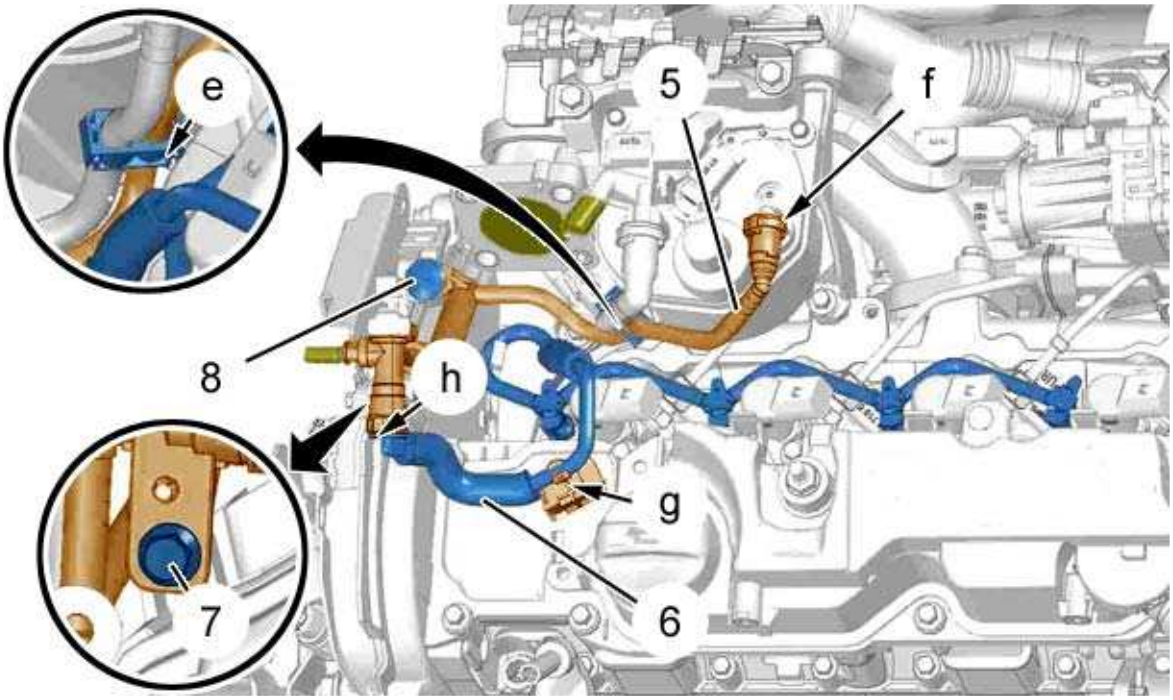

b1dg0wyd

Remove :

- The clip (8)

- The (7) bolt

> **WARNING :** Plug the openings ; Using tool [1617-J]

Uncouple :

- The fuel return pipe (5) (at "f")
- The fuel return pipe (6) (at "h")

Unclip :

- The fuel return pipe (5) (at "e")
- The fuel return pipe (6) (at "g")

Release :

- The fuel return pipe (5)
- The fuel return pipe (6)

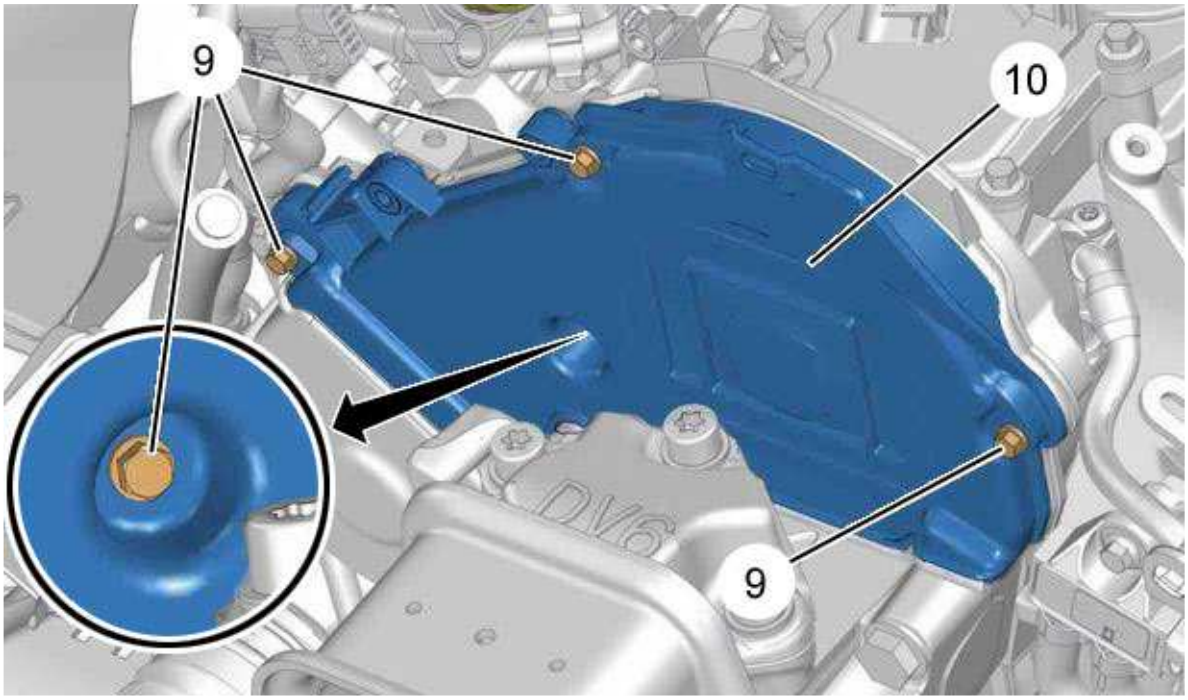

b1dg0gjd

Remove :

- The bolts (9)
- The top timing cover (10)

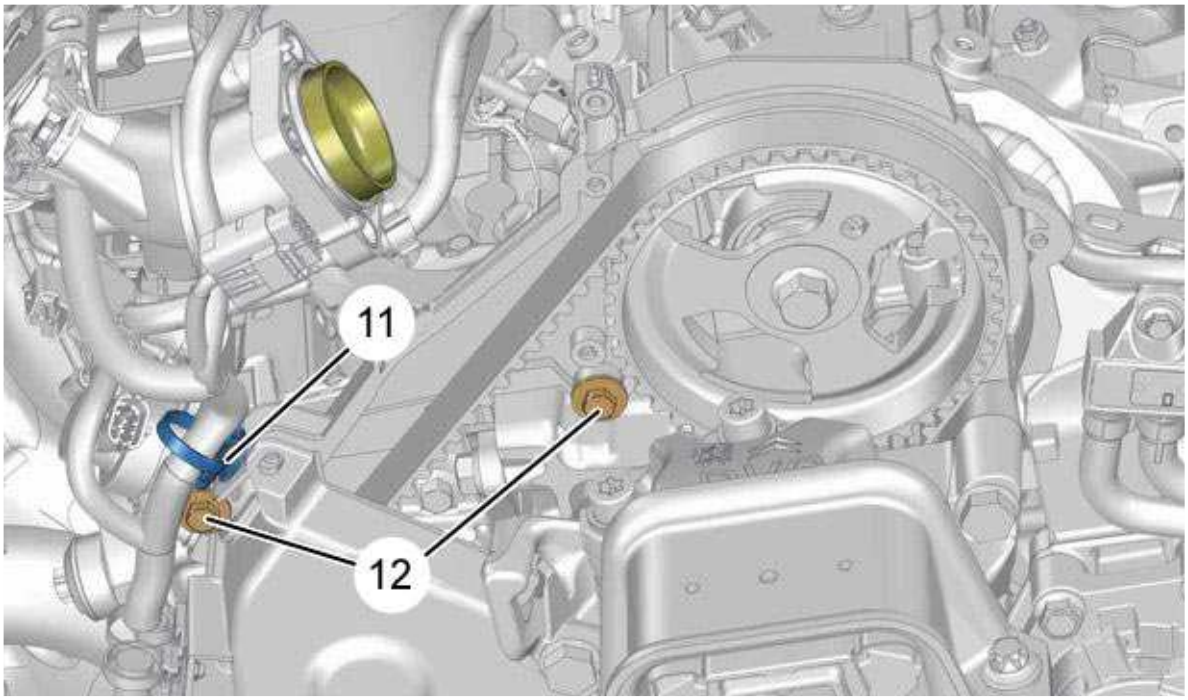

b1dg0gkd

Remove :

- The clip (11)
- The bolts (12)

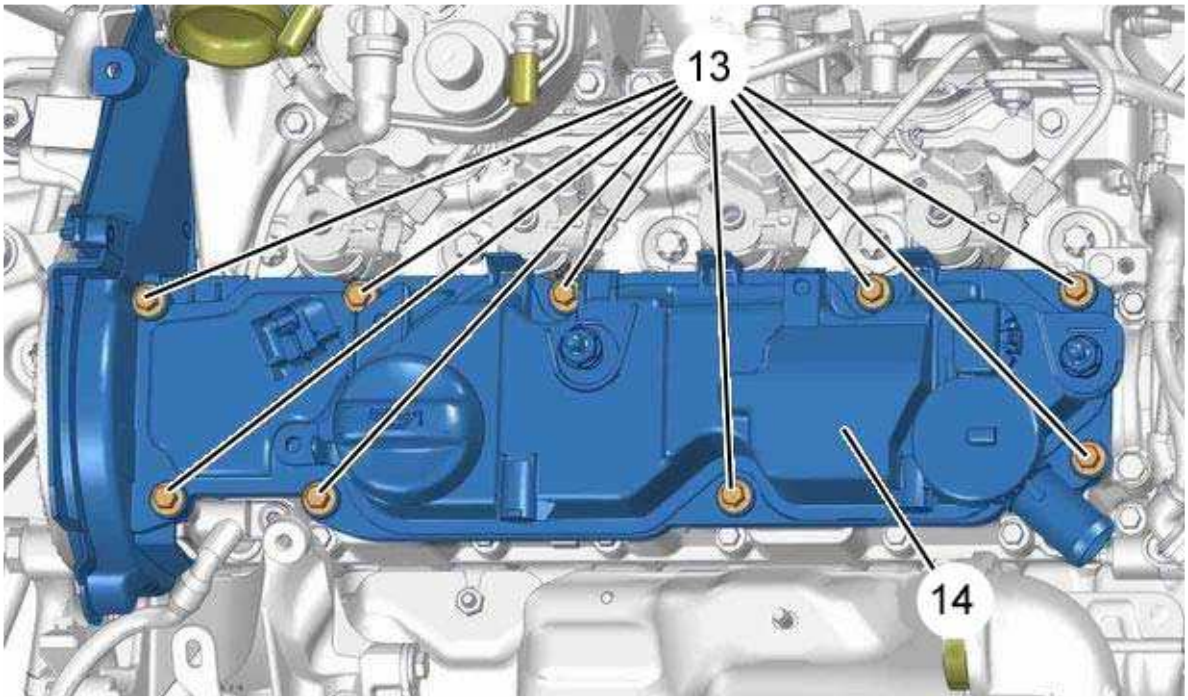

b1dg0gld

Remove :

- The bolts (13)
- The cylinder head cover (14)

3 - REFITTING

WARNING : Adhere to the tightening torques

ESSENTIAL : Respect the safety and cleanliness recommendations that are specific to high pressure diesel injection (HDi) engines

WARNING : At refitting, all the removed seals must be replaced with new seals

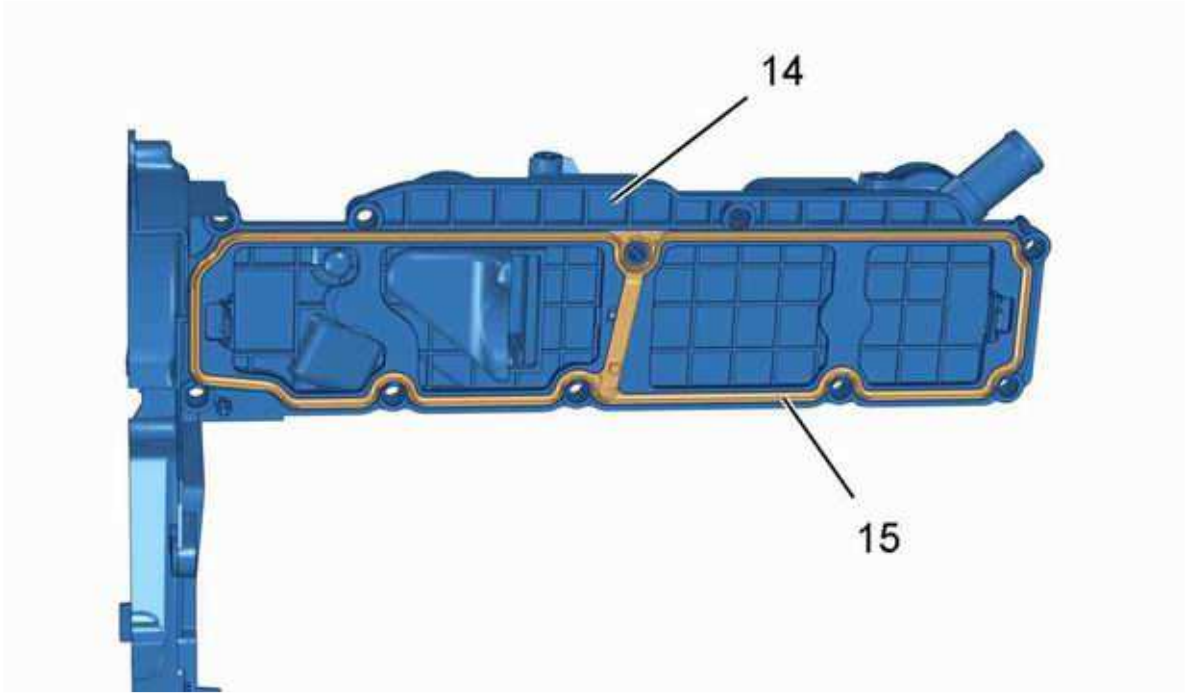

b1dg0gmd

Fit a seal (15) (new) on the cylinder head cover (14).

Fit the cylinder head cover (14).

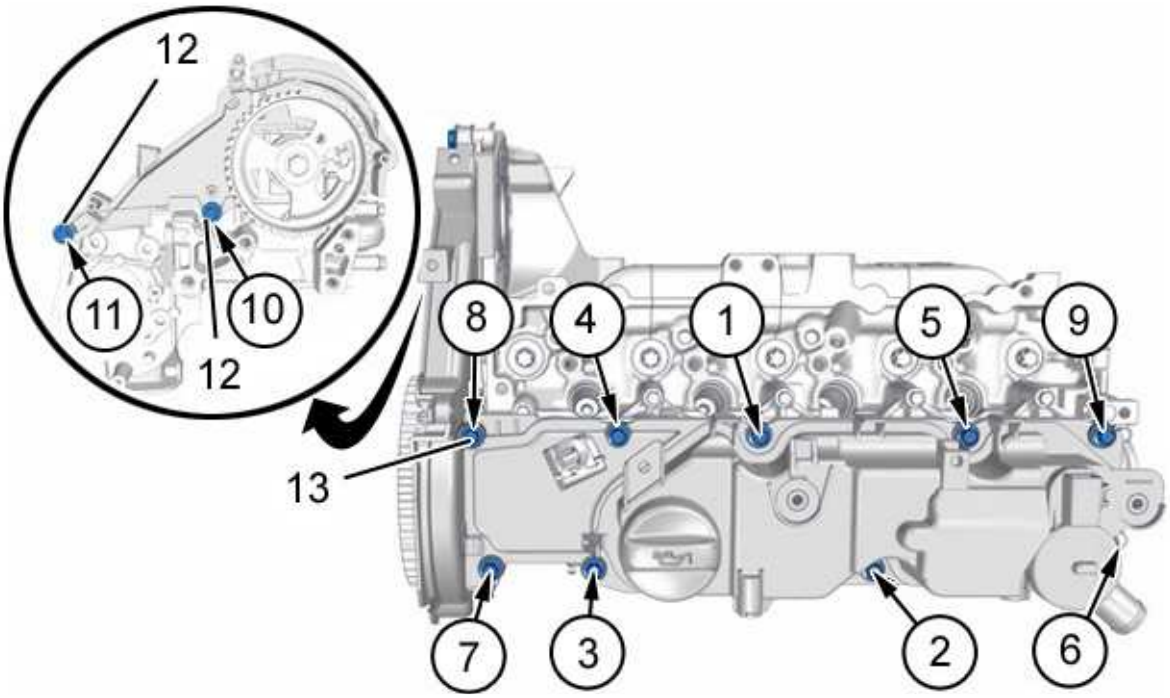

b1dg0gnd

WARNING : Observe the order of tightening of the bolts (12), (13)

Tightening method for the screws (13) (In the order shown) :

- Pre-tightening to torque of the bolts (13)
- Tightening of screws (13)

Refit :

- The bolts (12)
- The clip (11)

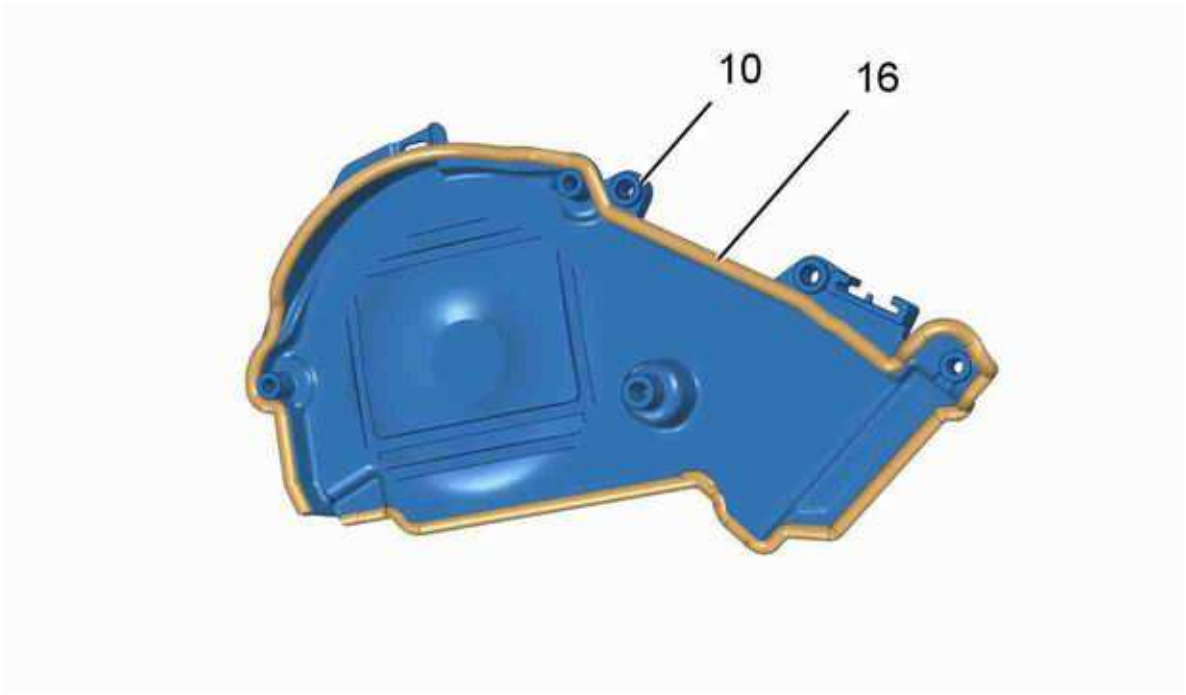

b1dg0god

Check that the seal (16) is positioned correctly on the upper timing cover (10).

Refit :

- The top timing cover (10)
- The bolts (9)

Remove the tool [1617-J].

Couple up :

- The fuel return pipe (5) (at "f")
- The fuel return pipe (6) (at "h")

Clip in place :

- The fuel return pipe (5) (at "e")
- The fuel return pipe (6) (at "g")

Refit :

- The (7) bolt
- The clip (8)
- The harness bracket (4)

Lock the harness bracket (4) (at "d").

Reposition the electrical harness (3) (at "c").

Put the harness (3) in place and clip it (at "a").

Clip the clip (2).

Connect the injectors (at "b").

Refit :

- The (1) bolt ; Use a mirror to make the operation easier
- The air mixer unit
- The air admission bypass valve
- The air filter box
- The engine cover (according to equipment)

Refit (depending on the proximity of the operation zone) :

- The ancillaries battery tray (according to equipment)
- The ancillaries battery
- The ancillaries battery cover (according to equipment)

> **WARNING :** Perform the operations that are required following a reconnection of the ancillaries battery

Reconnect the ancillaries battery.

4 - CHECK

Operate the manual priming pump several times to prime the fuel circuit.

Start the engine.

Check the absence of leaks.

CHECK : SETTING THE VALVE TIMING

ESSENTIAL : Observe the safety and cleanliness recommendations

1 - PARTS WHICH MUST ALWAYS BE REPLACED

Description	Quantity
Crankshaft pulley fixing bolt	1

2 - TOOLING

tool	Reference	Description
[0194-C]  *e5ab08st*	[0194-C]	flywheel stop
[0194-B]  *e5ab08rt*	[0194-B]	Camshaft probe
[0194-A]  *e5ab08qt*	[0194-A]	crankshaft setting rod

[0194-A]  *e5ab08qt*	[0194-A]	High pressure fuel pump drive pulley immobilising rod
[0194-T]  *e5ab05lt*	[0194-T]	plugs kit

3 - REMOVING

ESSENTIAL : Respect the safety and cleanliness recommendations that are specific to high pressure diesel injection (HDi) engines

Put the vehicle on a hoist.

Disconnect the ancillaries battery.

Uncouple and move aside the fuel supply and return pipes.

Plug the fuel supply and return pipes ; Using tool [0194-T].

Remove :

- The engine style cover (according to equipment)
- The 2 entry and exit unions from the turbocharging air cooler
- The front right wheel
- The front right mud guard
- The protective panel under the engine (according to equipment)
- The accessories drive belt

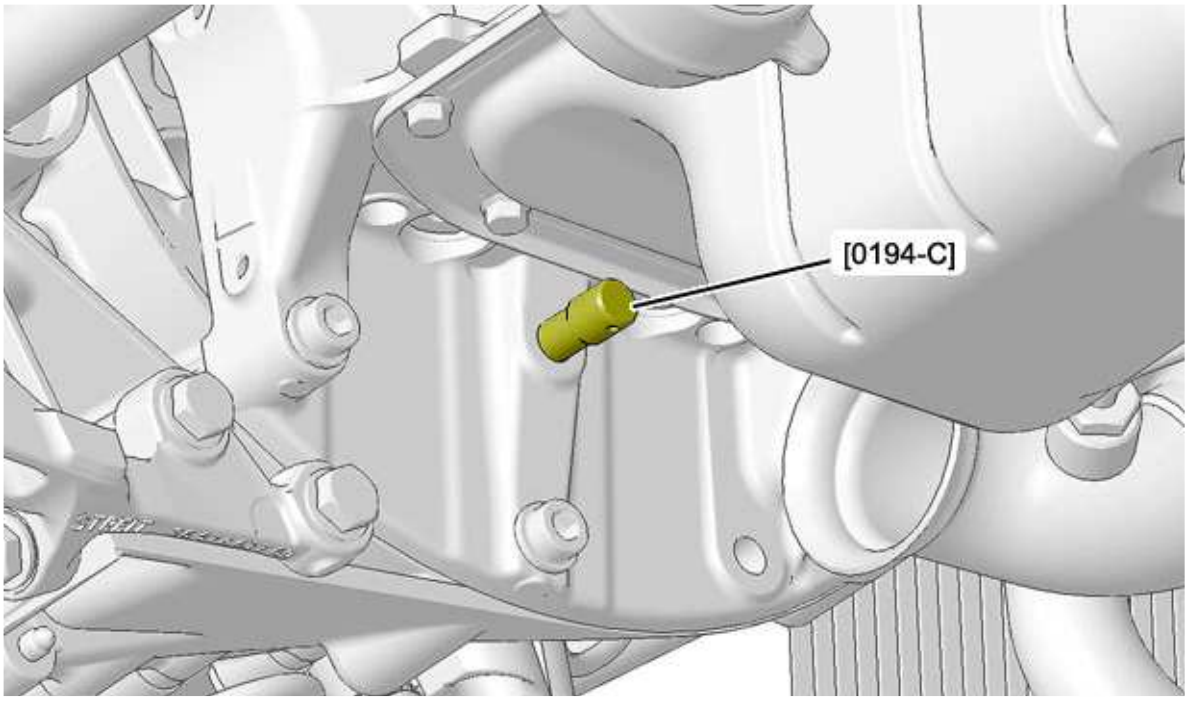

b1eg0r8d

Uncouple the exhaust front rubber tube (if necessary).

NOTE : Just before refitting, carry out the following checks (clockwise)

Rotate the engine by means of the crankshaft pulley screw to bring it to the flywheel locking position.

Lock the flywheel ; Using tool [0194-C].

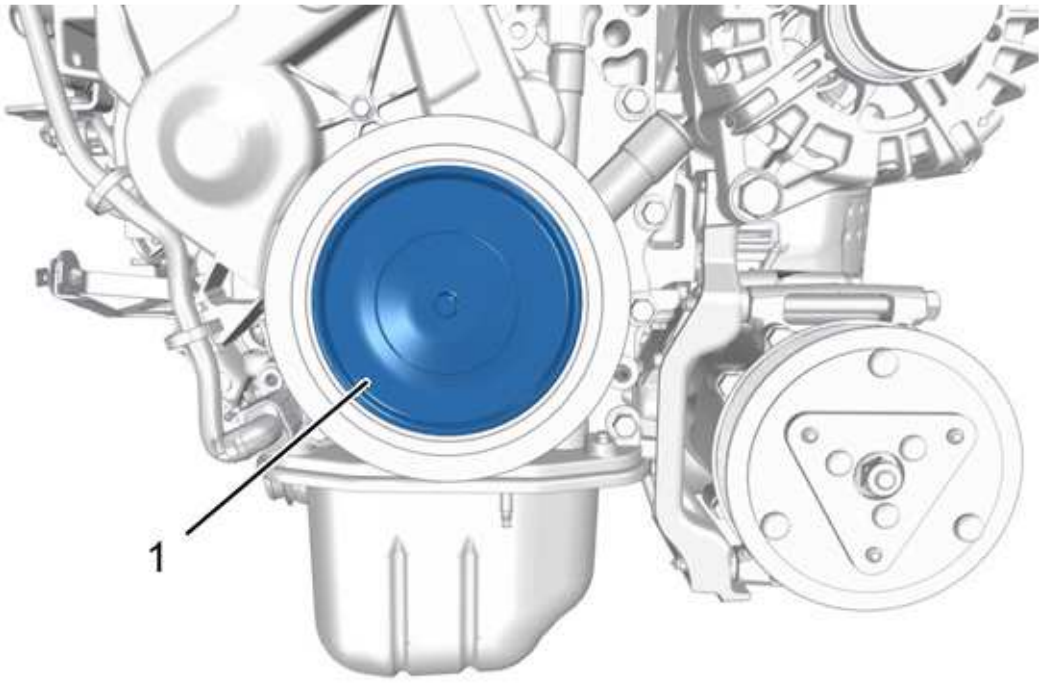

b1eg14md

Remove the pulley cover (1) (according to equipment).

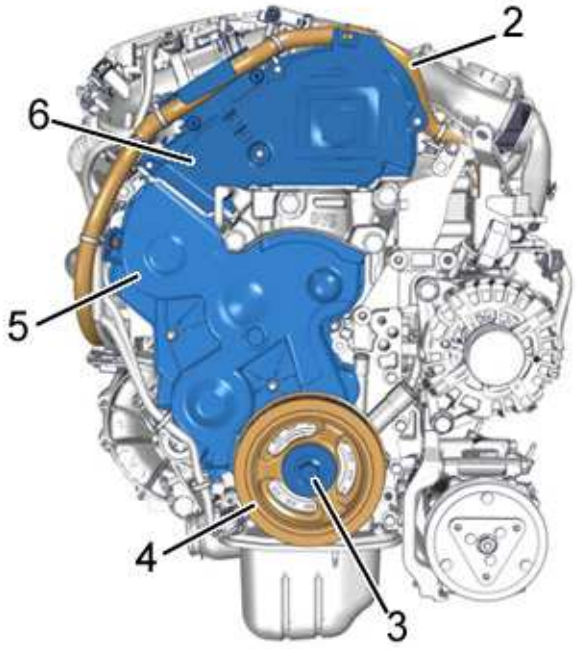

b1eg14nd

Release and move aside the electrical harness (2).

Disconnect the connector of the engine speed sensor.

Unclip the electrical harness (2) attached to the timing covers.

Remove :

- The top timing cover (6)
- The (3) bolt
- The pulley (4)

  NOTE : To make it easier to remove the lower timing cover (5) ; Move the accessories drive belt dynamic tensioner roller

Remove the lower timing cover (5).

Refit bolt (3).

Remove the peg [0194-C].

4 - CHECK

4 - 1 - Visual check

WARNING : Carry out the checks below

Check that the timing belt is free of cracks and traces of oil.

Check the absence of oil leaks (crankshaft and camshaft sealing rings).

Check the absence of coolant fluid leaks (coolant pump).

Check that the track of the engine speed sensor target is not damaged or scratched.

Replace any defective parts.

4 - 2 - Checking the valve timing

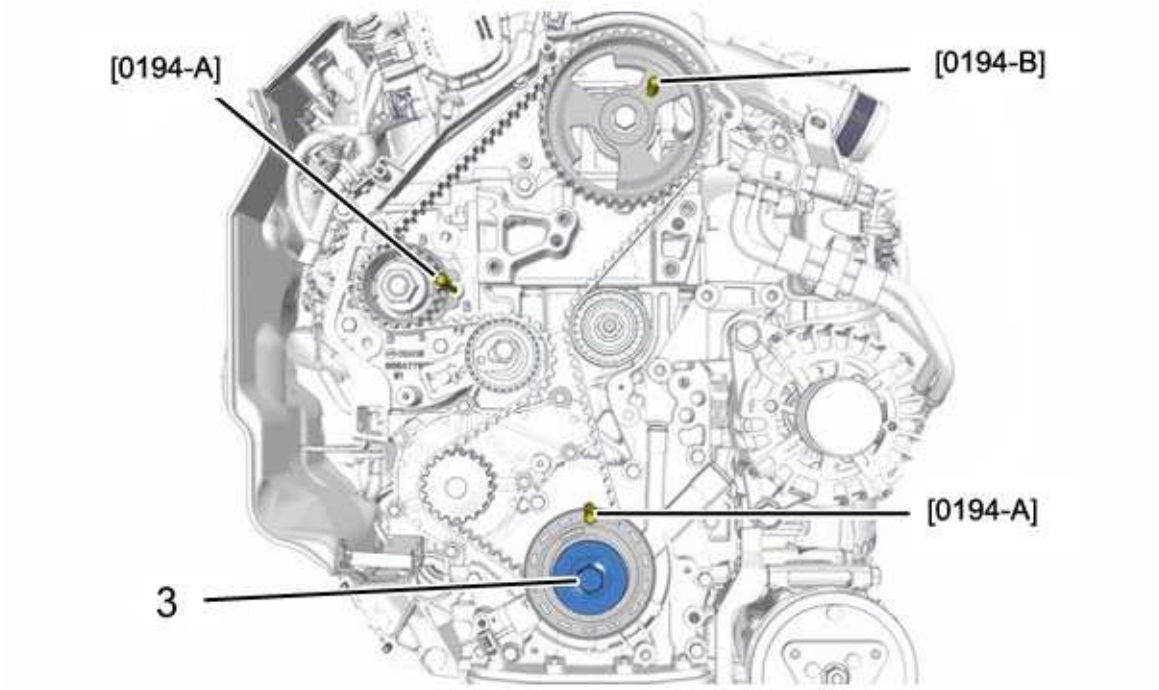

b1ed0fvd

WARNING : The magnetic track should carry no sign of damage and should not be approached by any other magnetic source ; Otherwise, replace the crankshaft pulley

WARNING : Never turn the crankshaft in the opposite direction to running

Turn the crankshaft through 6 revolutions clockwise using the screw (3).

WARNING : If it is impossible to peg the camshaft, check that the offset between the camshaft pulley hole and the pegging hole is not greater than 1 mm ; If this is not the case, repeat the cambelt fitting procedure

Peg :

- The crankshaft ; Using tool [0194-A]

- The camshaft ; Using the pin [0194-B] (oil the peg)
- The high pressure fuel pump drive pulley ; Using tool [0194-A] (oil the peg)

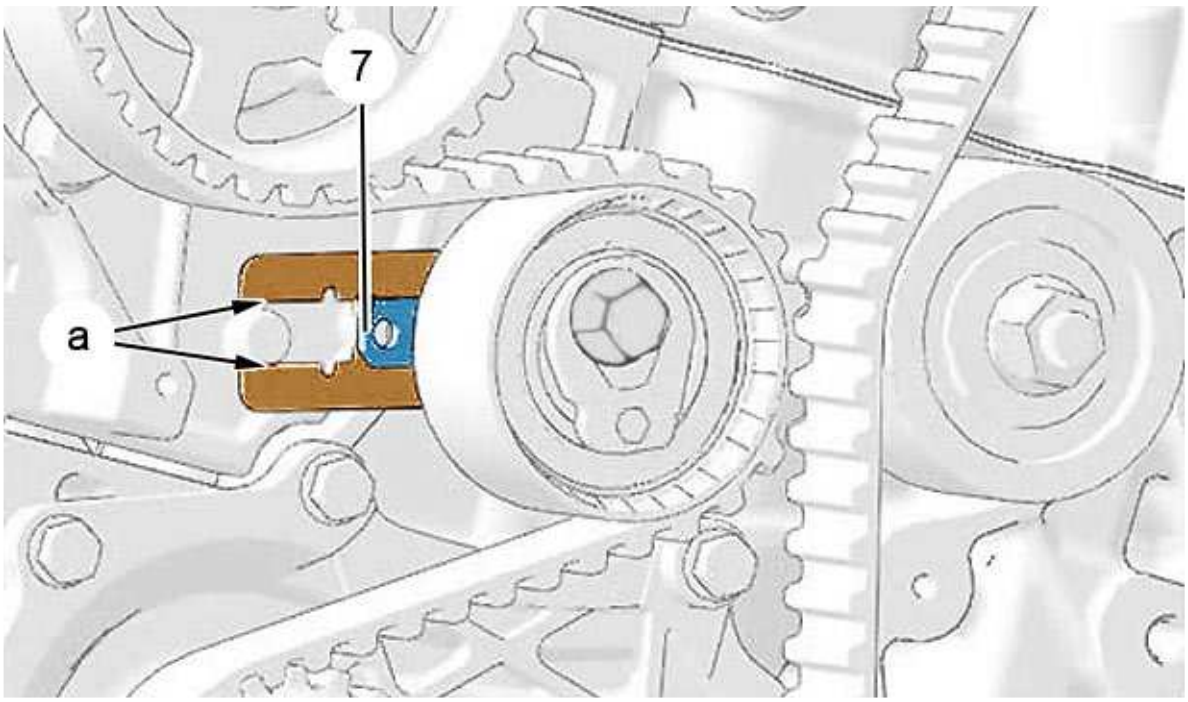

b1ed0fwd

Check the positioning of the index (7).

NOTE : The dynamic roller tensioner index (7) must be centred in the gap (at "a")

WARNING : If it does, repeat the timing belt tensioning operation

Remove the tools [0194B], [0194-A], [0194-A].

5 - REFITTING

WARNING : Adhere to the tightening torques

SPECIAL FEATURE :

FOR : 1CMJ - B0FLT : DIESEL DV6C UE6 85KW

FOR : 1CB7 - B0FBF : TURBO DIESEL DV6DTED

FOR : 1CB7 - B0FBM : DV6C TURBO DIESEL

FOR : 1CB8 - B0FBM : DV6C TURBO DIESEL

FOR : 1CB9 - B0FBF : TURBO DIESEL DV6DTED

FOR : 1CB9 - B0FBJ : DIESEL TURBO DV6EU

FOR : 1CB9 - B0FBM : DV6C TURBO DIESEL

FOR : 1CH5 - B0FBM : DV6C TURBO DIESEL

FOR : 1CH5 - B0FBF : TURBO DIESEL DV6DTED

FOR : 1CMJ - B0FBM : DV6C TURBO DIESEL

FOR : 1CX7 - B0FBM : DV6C TURBO DIESEL

FOR : 1C58 - B0FBM : DV6C TURBO DIESEL

FOR : 2CB9 - B0FBF : TURBO DIESEL DV6DTED

Tightening torques :

- **Engine**
- **Road wheels**

WARNING : Always replace the bolt (3) by a new bolt

Refit the tool [0194-C].

Remove the bolt (3).

NOTE : To make it easier to refit the lower timing cover (5) ; Move the accessories drive belt dynamic tensioner roller

Refit :

- The lower timing cover (5)
- The pulley (4)
- The new bolt (3)
- The cover of the pulley (1)
- The top timing cover (6)

Remove the tool [0194-C].

Clip the electrical harness (2) attached to the timing covers.

Connect the engine speed sensor .

Refit the ancillary belt .

Clip the electrical harness (2).

NOTE : Use new plastic clips

Couple up the exhaust front rubber tube (if necessary).

Remove the tool [0194-T].

Refit :

- The protective panel under the engine
- The front right mud guard
- The front right wheel
- The fuel feed and return pipes
- The 2 entry and exit unions from the turbocharging air cooler
- The engine style cover (according to equipment)
- The vehicle to its wheels

> **WARNING :** Perform the operations that are required following a reconnection of the ancillaries battery

Reconnect the ancillaries battery.

Operate the manual priming pump several times to prime the fuel circuit.

DISMANTLING - RE-ASSEMBLY : TIMING BELT

ESSENTIAL : Observe the safety and cleanliness recommendations

1 - TOOLING

Equipment : Trolley jack.

tool	Reference	Designation
[0194-C]  *e5ab08st*	[0194-C]	flywheel stop
[0194-B]  *e5ab08rt*	[0194-B]	Camshaft probe
[0194-A]  *e5ab08qt*	[0194-A]	crankshaft setting rod
		High pressure fuel pump drive

[0194-A]  *e5ab08qt*	[0194-A]	pulley immobilising rod
[0194-T]  *e5ab05lt*	[0194-T]	plugs kit

2 - REMOVING

ESSENTIAL : Respect the safety and cleanliness recommendations that are specific to high pressure diesel injection (HDi) engines

Put the vehicle on a hoist.

Disconnect the ancillaries battery.

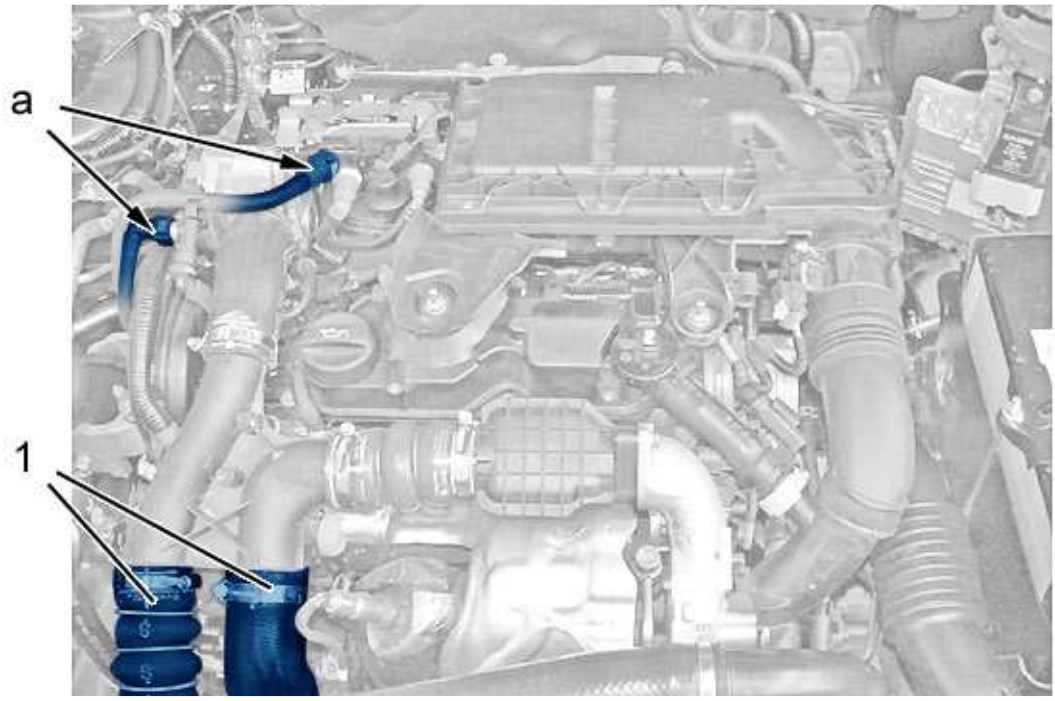

b1eg12md

Uncouple and move aside the fuel supply and return pipes (at "a").

Plug the fuel supply and return pipes ; Using tool [0194-T].

Remove :

- The engine style cover
- The air hoses (1)
- The front right wheel
- The front right mud guard
- The protective panel under the engine
- **The accessories drive belt**

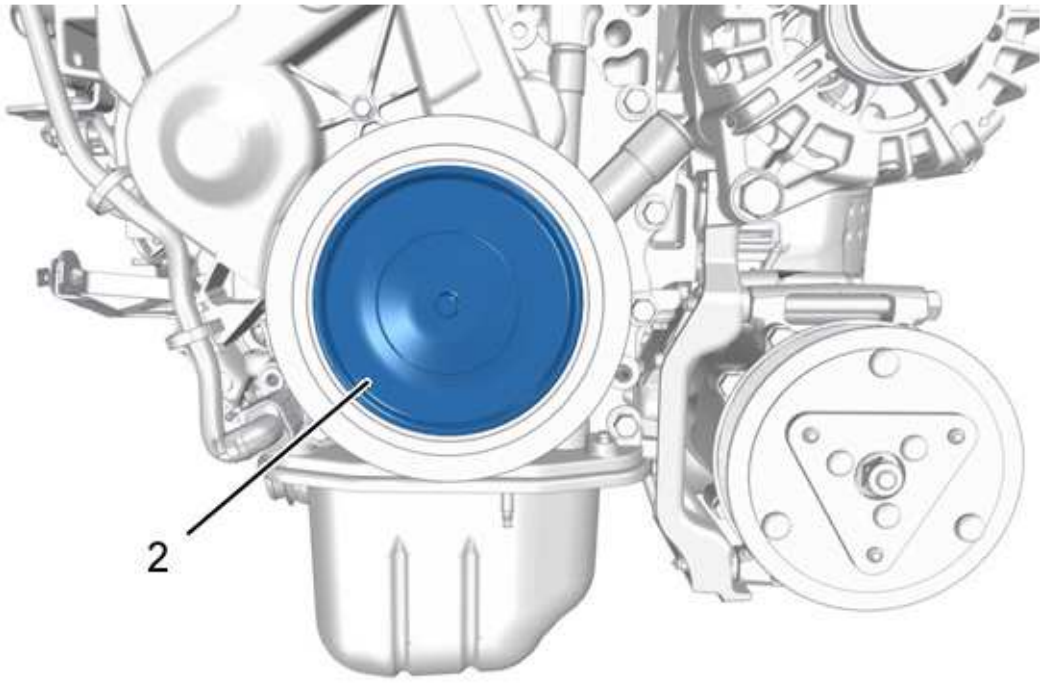

b1ed0czd

Remove the pulley cover (2).

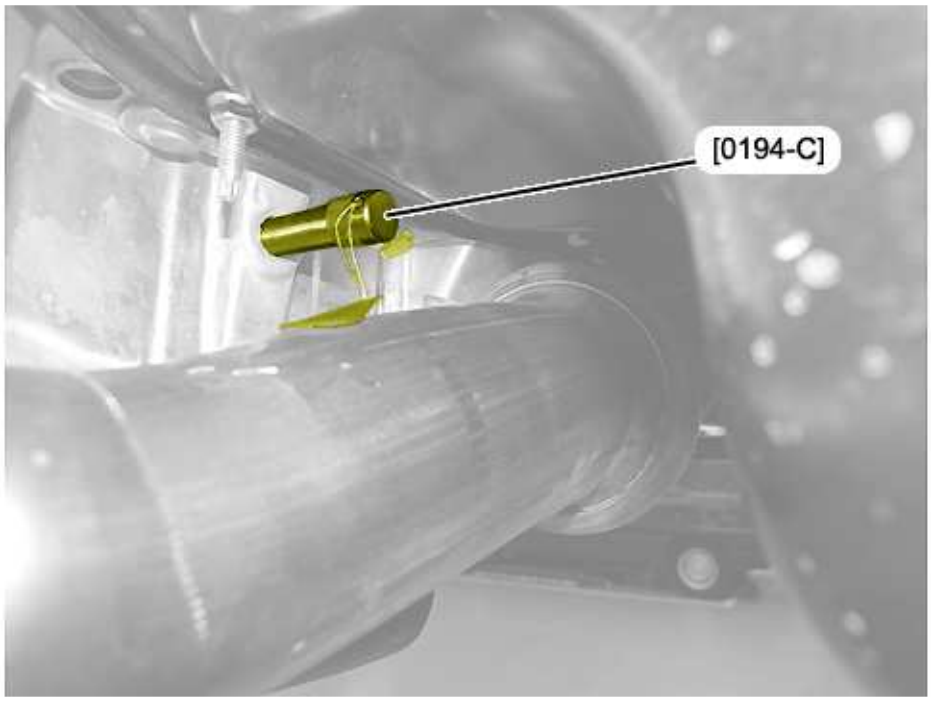

b1ed04td

NOTE : Just before refitting, carry out the following checks (clockwise)

Rotate the engine by means of the crankshaft pulley screw to bring it to the flywheel locking position.

Lock the flywheel ; Using tool [0194-C].

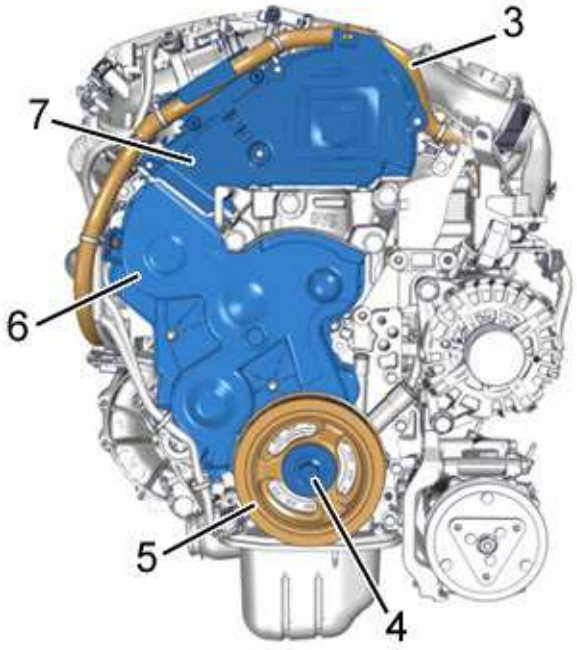

b1eg0vcd

Disconnect the connector of the engine speed sensor.

Unclip the electrical harness (3) attached to the timing covers.

Remove :

- The top timing cover (7)
- The (4) bolt
- The pulley (5)

  NOTE : To make it easier to remove the lower timing cover (6) ; Move the accessories drive belt dynamic tensioner roller

Remove the lower timing cover (6).

Refit bolt (4).

Remove the peg [0194-C].

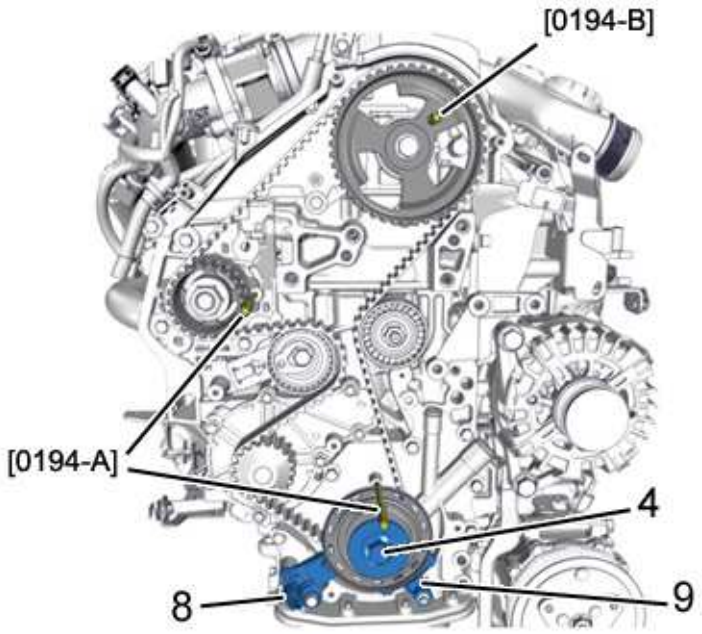

b1eg0v9d

WARNING : The crankshaft pulley magnetic track must not bear any signs of damage and must be kept away from all magnetic sources ; Otherwise, replace the crankshaft pulley

Remove :

- The engine speed sensor (8)
- The offset prevention angle bracket (9)

Turn the crankshaft by means of the screw (4) to bring the camshaft to its pegging point.

Peg :

- The camshaft ; Using the pin [0194-B] (oil the peg)
- The high pressure fuel pump drive pulley ; Using the pin [0194-A] (oil the peg)
- The crankshaft ; Using the pin [0194-A]

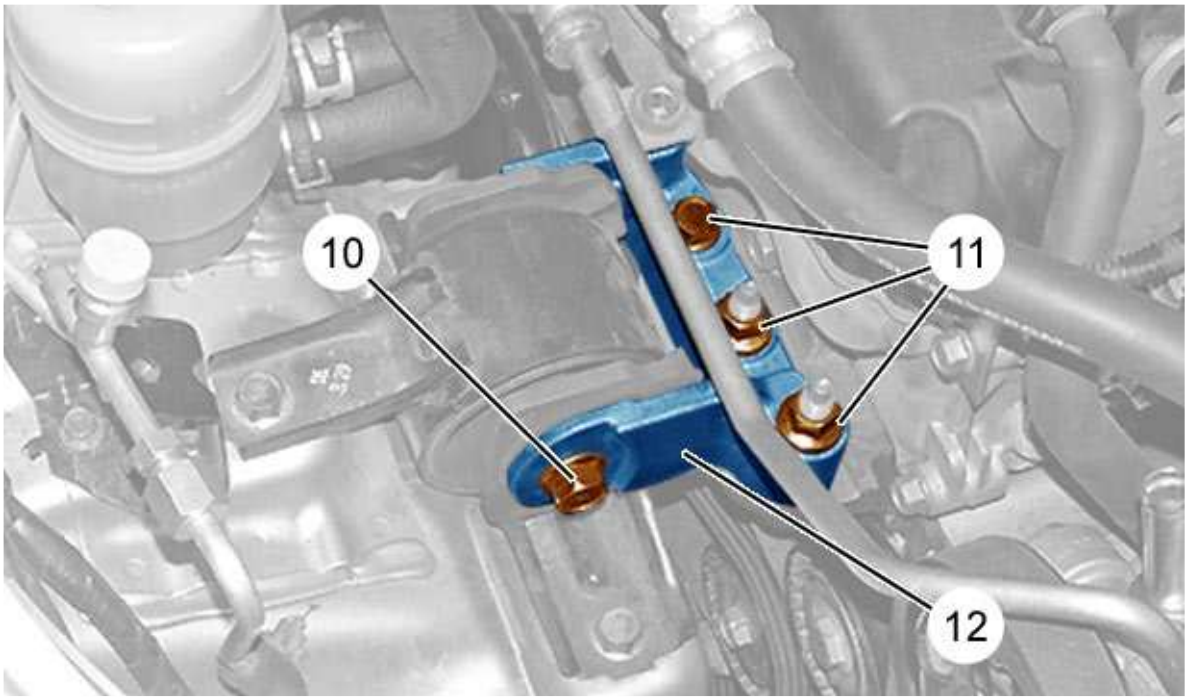

b1eg12nd

Place a trolley jack fitted with a soft pad under the engine oil sump .

NOTE : The trolley jack must be able to support the engine-gearbox assembly

Remove :

- The engine mounting (12) fixings (11)
- The bolt (10)
- The engine mounting (12)

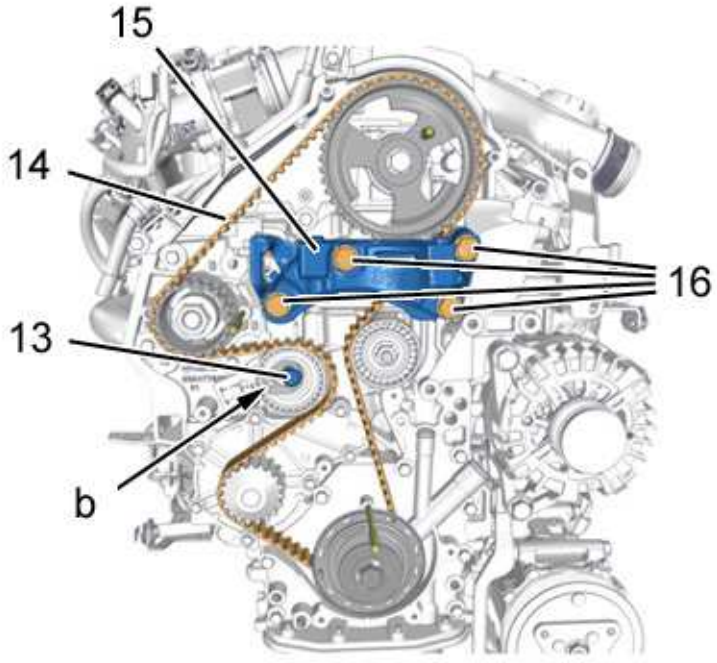

b1eg0xid

Remove :

- The bolts (16)
- The intermediate engine mounting (15)

> **WARNING :** Support the dynamic roller tensioner ; Using a 6 -sided wrench (at "b")

Slacken the bolt (13).

Slacken the timing belt (14) by pivoting the dynamic roller tensioner clockwise.

Remove the timing belt (14) starting with the coolant pump pulley .

3 - CHECK

> **WARNING :** Just prior to refitting, carry out the checks below

Check that the coolant pump rollers and pulley are turning freely (without excess play and without tightness).

Check the absence of oil leaks (crankshaft and camshaft sealing rings).

Check the absence of coolant fluid leaks (Coolant pump).

Check that the engine speed sensor target track (8) is not damaged or scratched.

> **NOTE :** Replace any defective parts

4 - REFITTING

> **WARNING :** Adhere to the tightening torques

SPECIAL FEATURE :

FOR : 1CMJ - B0FLT : DIESEL DV6C UE6 85KW

FOR : 1CMJ - B0FBM : DV6C TURBO DIESEL

Tightening torques :

- engine
- Power unit suspension
- road wheels

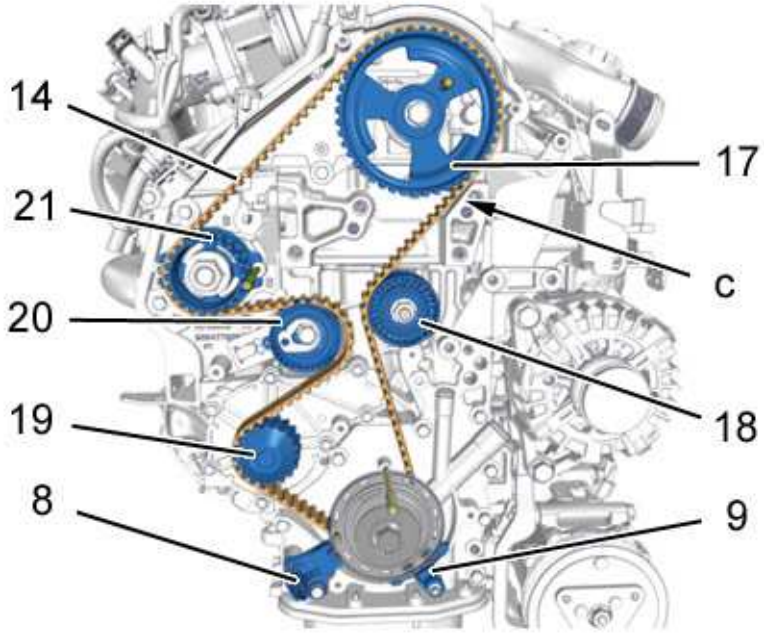

b1eg0xjd

Check the tightening of the guide roller (18).

Fit the timing belt (14) on the crankshaft pulley .

The bolt (14) with the washer "c" :

- The tensioning roller (18)
- The camshaft pulley (17)
- The fuel high pressure pump pulley (21)
- The coolant pump pulley (19)
- The dynamic roller tensioner (20)

Refit :

- The offset prevention angle bracket (9)
- The engine speed sensor (8)

4 - 1 - Adjusting the timing belt tension

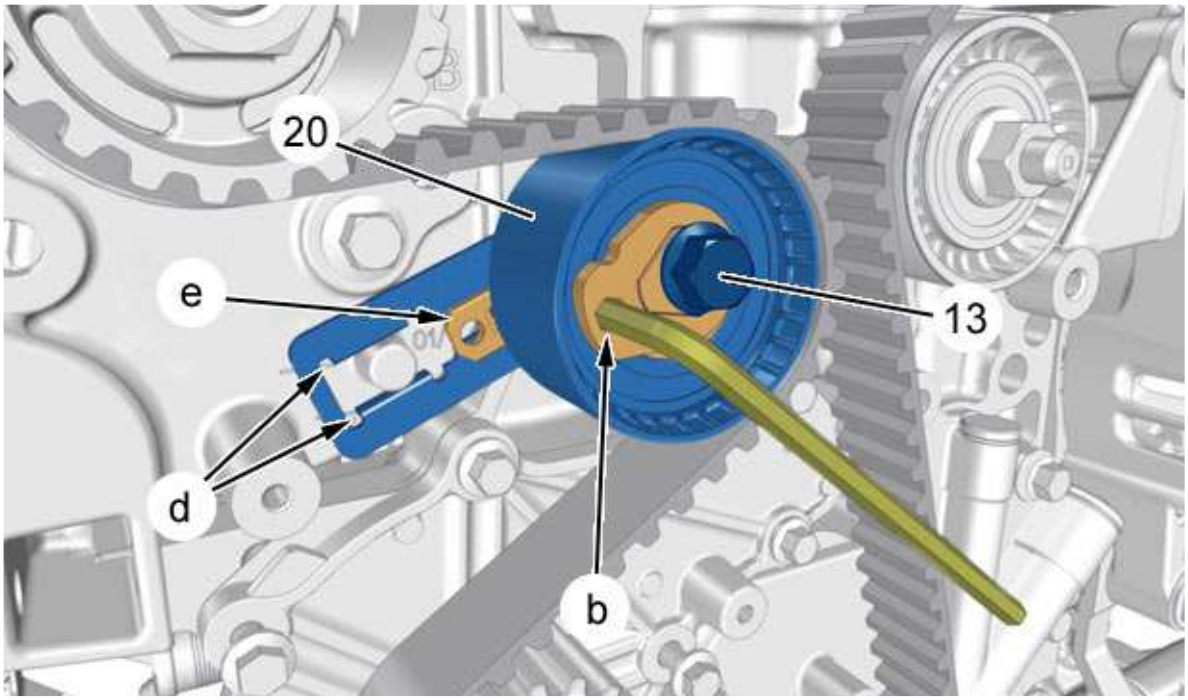

b1eg0xkd

Bring the index (at "e") to the centre of the gap (at "d") by turning the tensioner anticlockwise ; Using a 6 -sided wrench.

Tighten the bolt (13) .

> **WARNING :** The dynamic roller tensioner (20) index "e" must be centred in the gap (at "d")

Remove the pegs [0194-B], [0194-A].

Refit :

- The intermediate engine mounting (15)
- The bolts (16)
- The engine mounting (12)
- The bolt (10)
- The engine mounting (12) fixings (11)

Remove the trolley jack.

> **WARNING :** Do not turn the engine anti clockwise

Turn the crankshaft by 6 rotations clockwise.

Fit the crankshaft setting rod; Using the pin [0194-A].

Check the positioning of the index (at "e").

NOTE : The index (at "e") of the dynamic tensioner roller (20) must be centred in the gap (at "d")

WARNING : If this is not the case : Resume the timing belt tensioning operation

Peg :

- The camshaft pulley (17) ; Using the pin [0194-B]
- The fuel high pressure pump (21) pulley ; Using the pin [0194-A]

WARNING : If it is impossible to pin the camshaft, check that the offset between the hole in the pulley (17) of the camshaft and the pinning hole is not more than 1 millimetres. In the event of an incorrect measurement, start the procedure again

Remove the pegs [0194-B], [0194-A].

4 - 2 - Subsequent operations

WARNING : Always replace the bolt (4) by a new bolt

Refit the tool [0194-C].

Remove the bolt (4).

NOTE : To make it easier to refit the lower timing cover (6) ; Move the accessories drive belt dynamic tensioner roller

Refit :

- The lower timing cover (6)
- The pulley (5)
- The new bolt (4)
- The cover of the pulley (2)
- The top timing cover (7)

Remove the tool [0194-C].

Clip the electrical harness (3) attached to the timing covers.

Connect the engine speed sensor .

Refit the ancillary belt .

Clip the electrical harness (3).

NOTE : Use new plastic clips

Remove the tool [0194-T].

Connect the fuel supply and return pipes (at "a").

Refit :

- The protective panel under the engine
- The front right mud guard
- The front right wheel
- The air hoses (1)
- The engine style cover
- The vehicle to its wheels

> **WARNING :** Perform the operations that are required following a reconnection of the ancillaries battery

Reconnect the ancillaries battery.

Operate the manual priming pump several times to prime the fuel circuit.

CHECK : OIL PRESSURE

ESSENTIAL : Observe the safety and cleanliness recommendations

1 - REPLACEMENT OF PARTS IN ALL CASES

Designation	Quantity
The oil pressure sensor seal	1

2 - TOOLING

NOTE : The pressure gauge [1529] and the corresponding adaptor can be used in place of the pressure gauge indicated

tool	Reference	Designation
[1503-AY]  *e5ad01tt*	[1503-AY]	Oil pressure gauge
[1503-B]  *e5ab046t*	[1503-B]	Pressure take-off hose
[1503-J]  *e5ad01pt*	[1503-J]	engine oil pressure union

3 - CHECK

> **WARNING :** Adhere to the tightening torques

Check the oil level.

> **WARNING :** Oil pressure is checked with the engine hot after checking the oil level

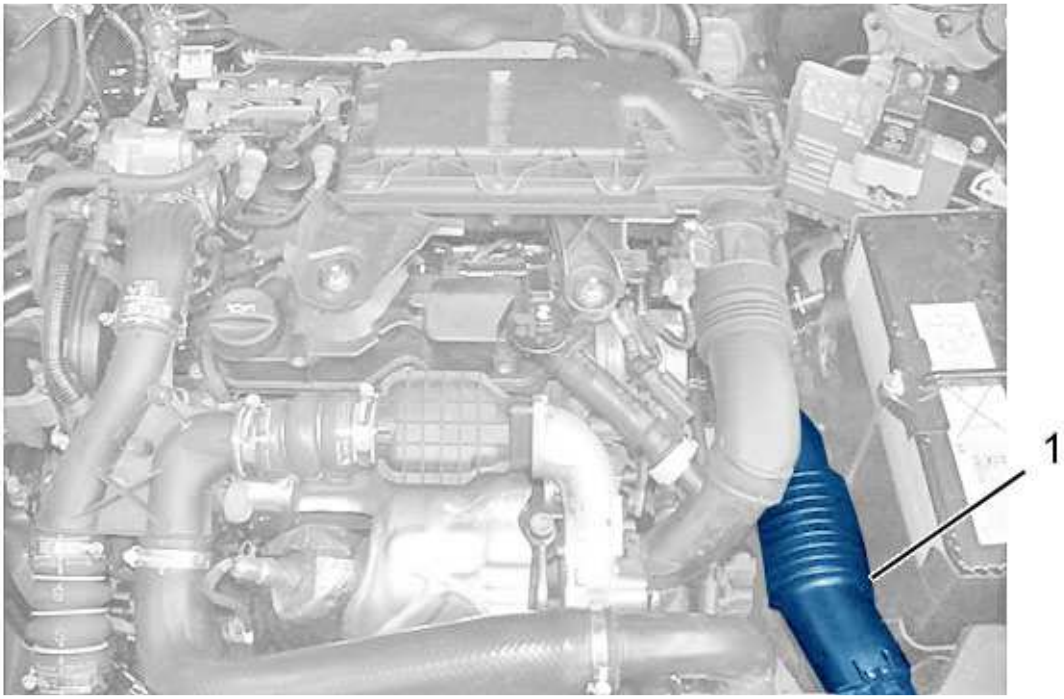

b1fd08sd

Remove the air inlet duct (1).

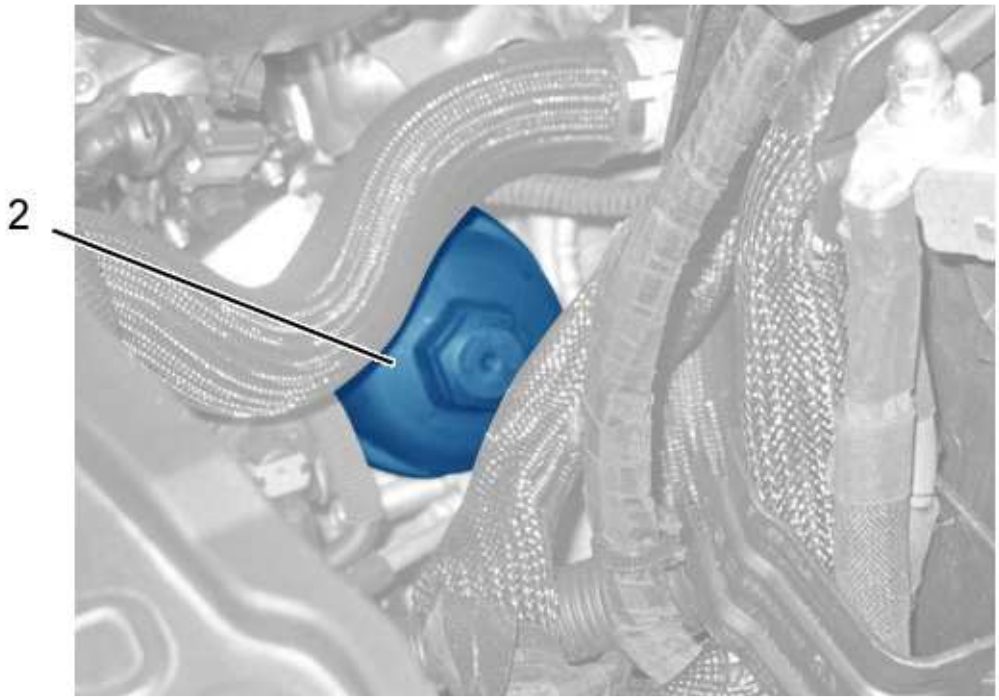

b1fd08td

Protect the area with absorbent paper or a clean rag.

Remove the filter element protection cover (2).

Unclip the filter element from the protection cover (2).

Refit the filter element on the oil filter support .

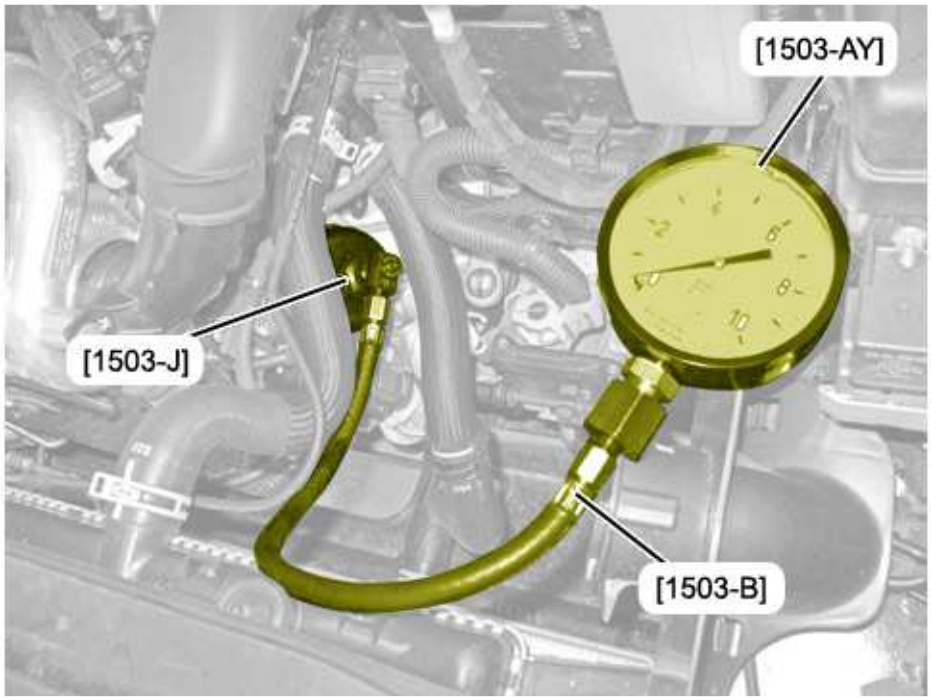

b1fd03od

WARNING : Adhere to the tightening torques

Fit :

- The union [1503-J] on the oil filter support
- The hose [1503-B] onto the union [1503-J]
- The pressure gauge [1503-AY] onto the hose [1503-B]

Start the engine.

Measure the oil pressures.

Compare the readings on the oil pressure gauge with those in the table.

NOTE : Only carry out work on the engine if the values read are lower than those in the table

Remove the tools [1503-AY], [1503-B], [1503-J].

Unclip the filter element from the tool [1503-J].

Refit :

- The filter element on the protective cover of the filter element (2)
- The filter element protective cover (2)
- The air inlet neck (1)

Top up the engine oil.

REMOVING - REFITTING : OIL PRESSURE SENSOR

ESSENTIAL : Observe the safety and cleanliness recommendations

1 - LOCATION

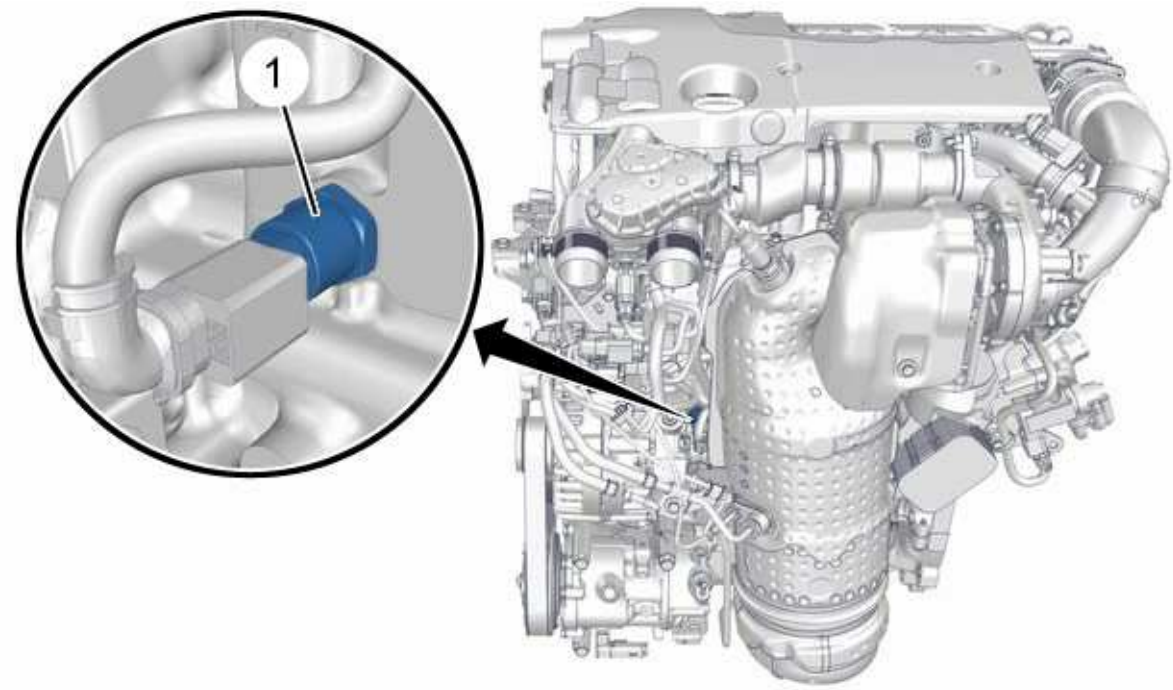

b1fg0ayd

(1) Oil pressure sensor.

2 - REMOVING

Disconnect the ancillaries battery.

Remove :

- The protective panel under the engine
- The catalytic converter /particle emission filter assembly(According to equipment)

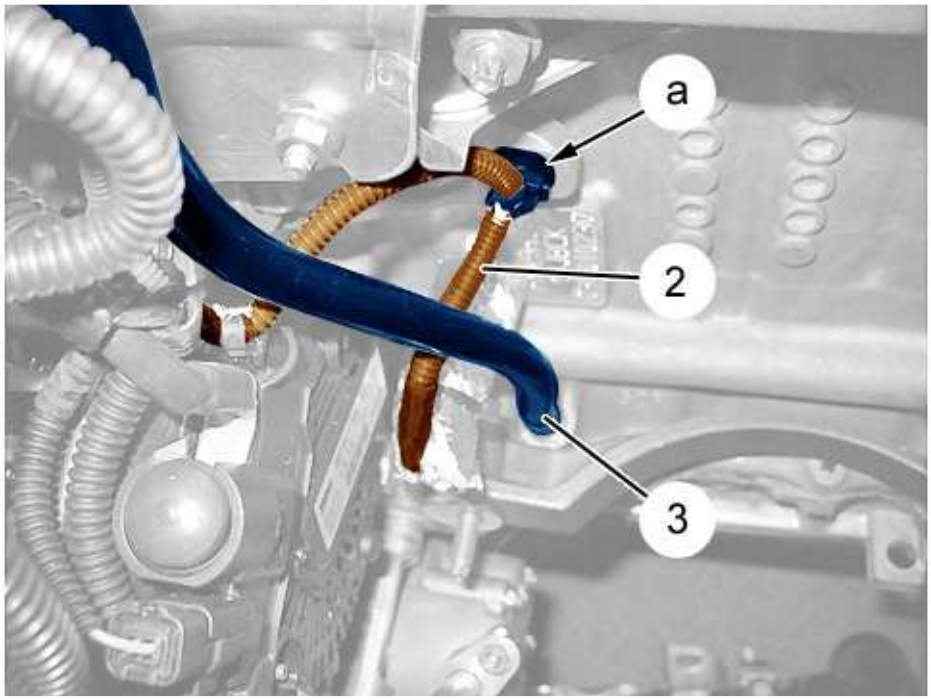

b1fg0azd

Protect the area with absorbent paper or a clean rag.

Remove :

- The upper fixing of the oil gauge guide
- The dipstick guide tube (3) and the dipstick

Unclip (at "a").

Release the sleeve (2).

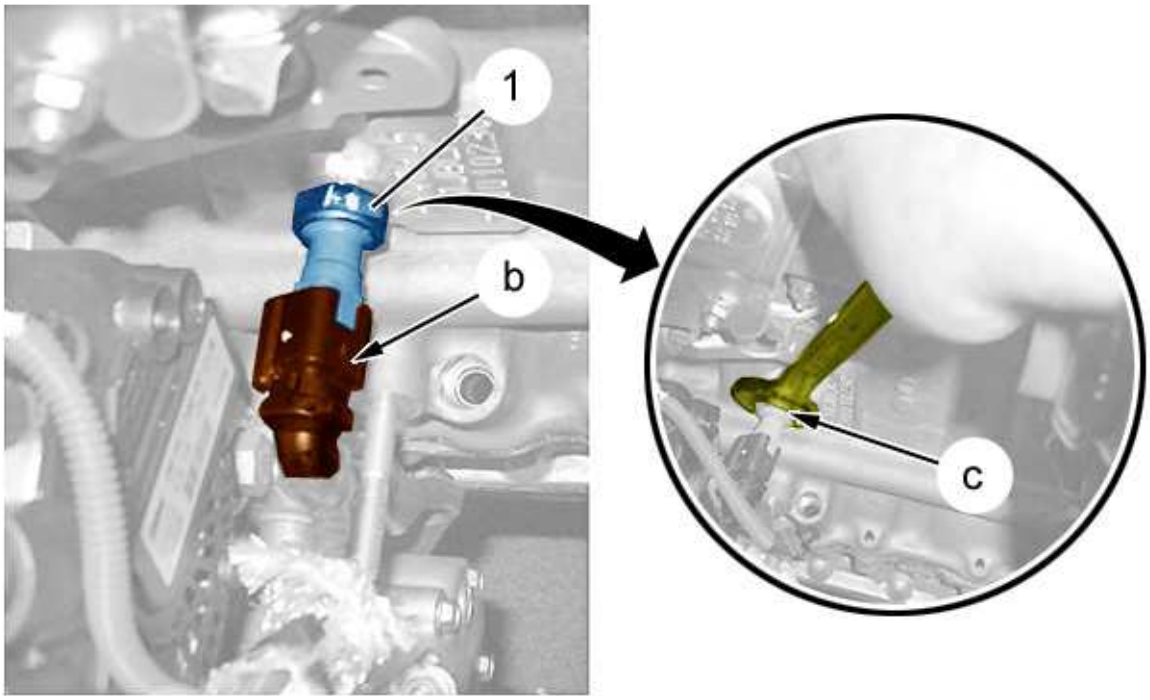

b1fg01ld

Unscrew : The oil pressure sensor (1) ; Using a flat spanner (at "c").

Remove :

- The oil pressure sensor (1)
- Seal

Disconnect the connector (at "b").

3 - REFITTING

> **WARNING :** Adhere to the tightening torques

> **WARNING :** Systematically replace the seal (new seal)

Refit :

- Seal (new)
- The oil pressure sensor (1) (Tighten to the specified torque)

Connect the connector (at "b").

Refit :

- The heat protection cover (2)
- The clip (at "a")
- The dipstick guide tube (3) and the dipstick

- The upper fixing of the oil gauge guide
- The catalytic converter /particle emission filter assembly (according to equipment)
- The protective panel under the engine

> **WARNING :** Perform the operations that are required following a reconnection of the ancillaries battery

Reconnect the ancillaries battery.

Top up the engine oil.

REMOVING - REFITTING : OIL PUMP

ESSENTIAL : Observe the safety and cleanliness recommendations

1 - PARTS WHICH MUST ALWAYS BE REPLACED

Designation	Quantity
Crankshaft ring seal (oil pump side)	1
Seal (Oil pump strainer)	1
Oil pump seal	1

2 - REMOVING

2 - 1 - Preliminary operations

Put the vehicle on a hoist.

Disconnect the ancillaries battery.

Remove :

- The engine style cover (according to equipment)
- The dipstick
- The protective panel under the engine (according to equipment)

Uncouple the exhaust line in order to avoid damage to the front rubber tube (at the flexible tube).

Remove the timing belt .

2 - 2 - Oil sump

Drain the engine oil.

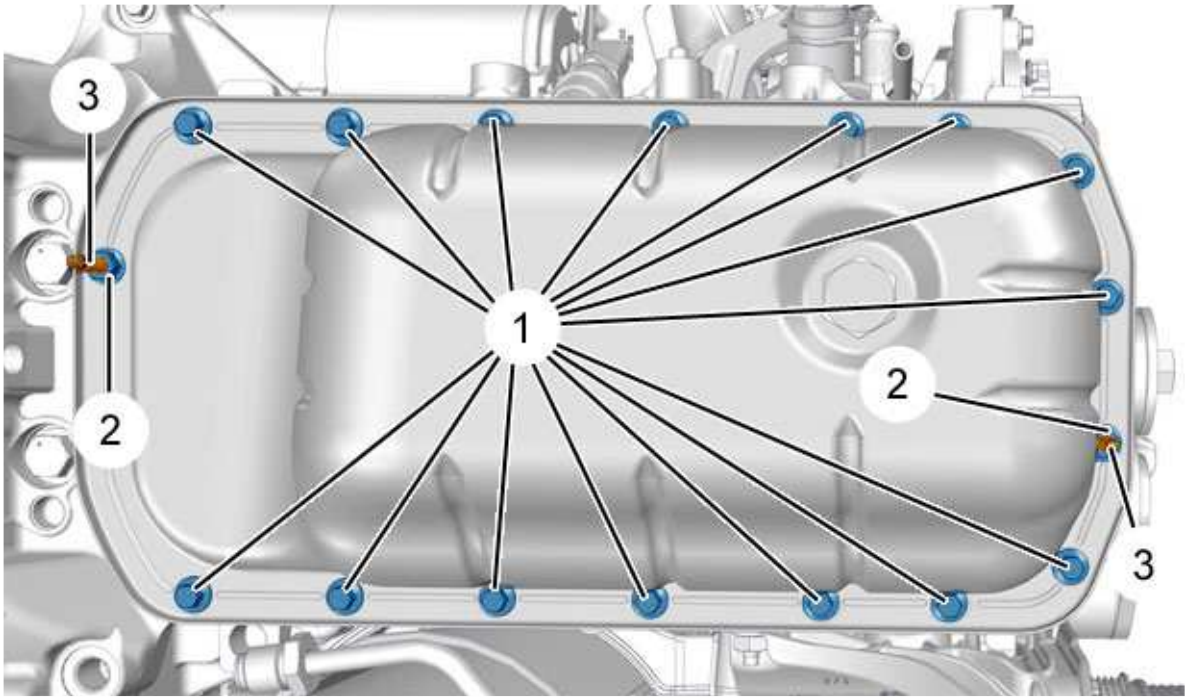

b1fg03id

Remove the 15 fixing screws (1).

Unscrew the 2 nuts (2).

NOTE : Partially undo the 2 studs (3) in order to separate the oil sump

Separate the oil sump.

Remove :

- The 2 nuts (2)
- The oil sump
- The 2 studs (3)

2 - 3 - oil pump

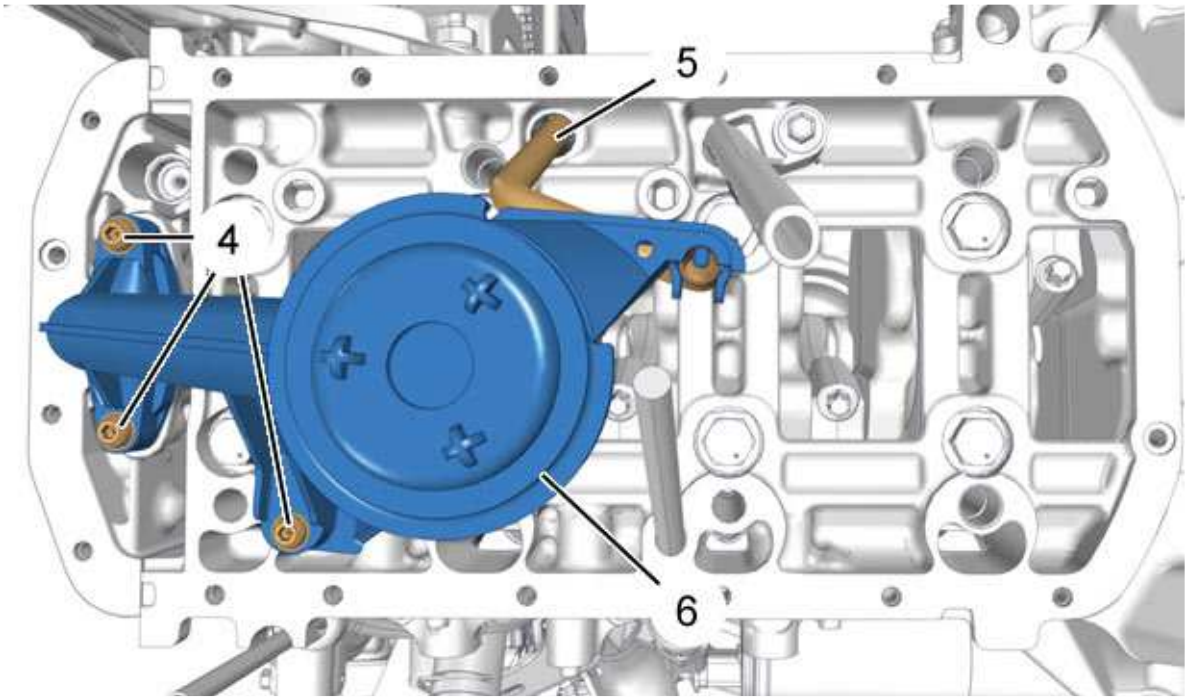

b1fg03ld

Remove :

- The 3 bolts (4)
- The oil pump strainer (6)
- The dipstick guide tube (5)

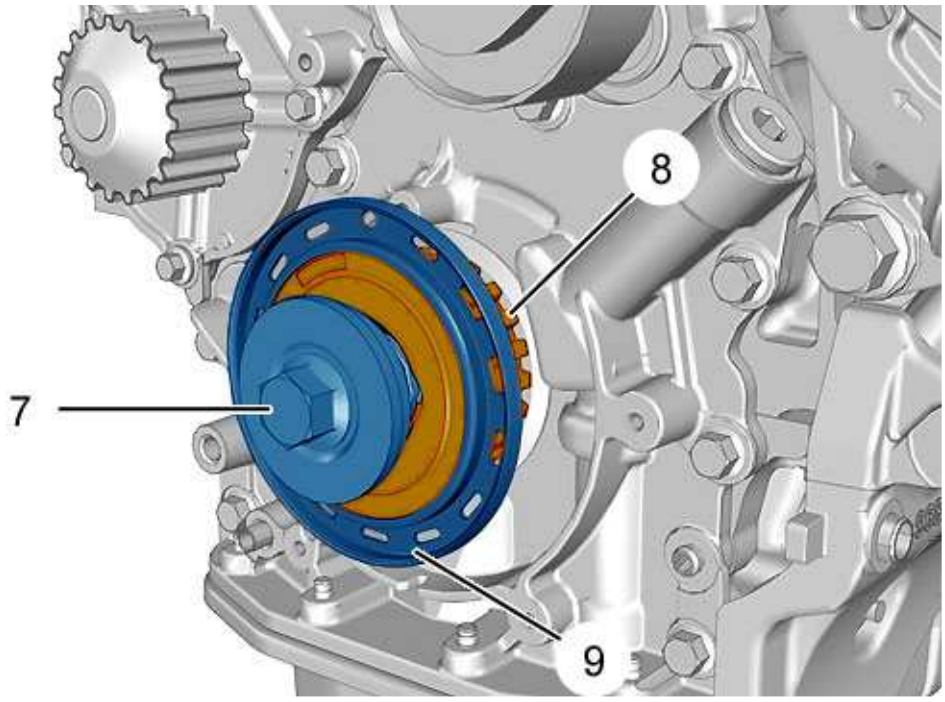

b1fg03md

NOTE : Take care not to deform the target (9) when removing the crankshaft gear (8)

Remove :

- The (7) bolt
- The crankshaft gear (8) (Carefully)

NOTE : Retrieve the key

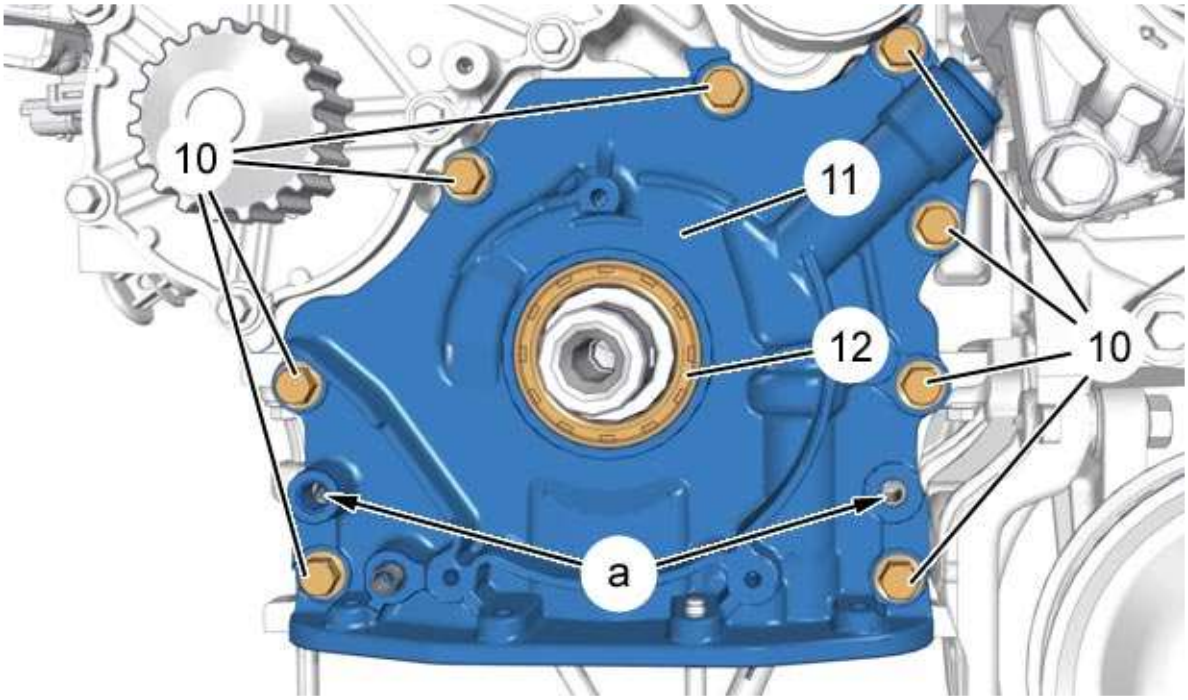

b1fg03pd

Remove the 8 bolts (10).

Separate the oil pump (11) (at "a") ; Using a flat screwdriver.

Remove :

- The oil pump (11)
- The sealing ring (12)

3 - REFITTING

WARNING : Clean the gasket faces with an approved descaling product. Do not use a cutting or abrasive tool. The gasket faces must not have any traces of knocks or scores

WARNING : Adhere to the tightening torques

3 - 1 - oil pump

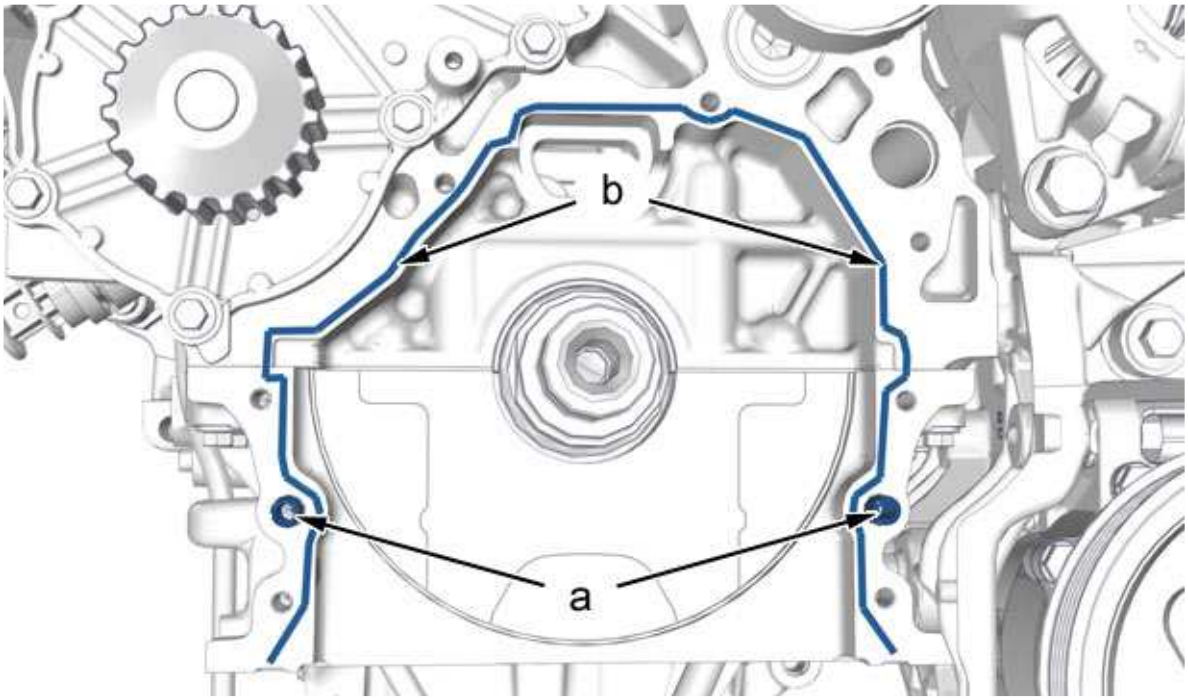

b1fg03sd

Check the presence of the centring pins (at "a").

Apply a bead of sealing compound (index "E10") (at "b").

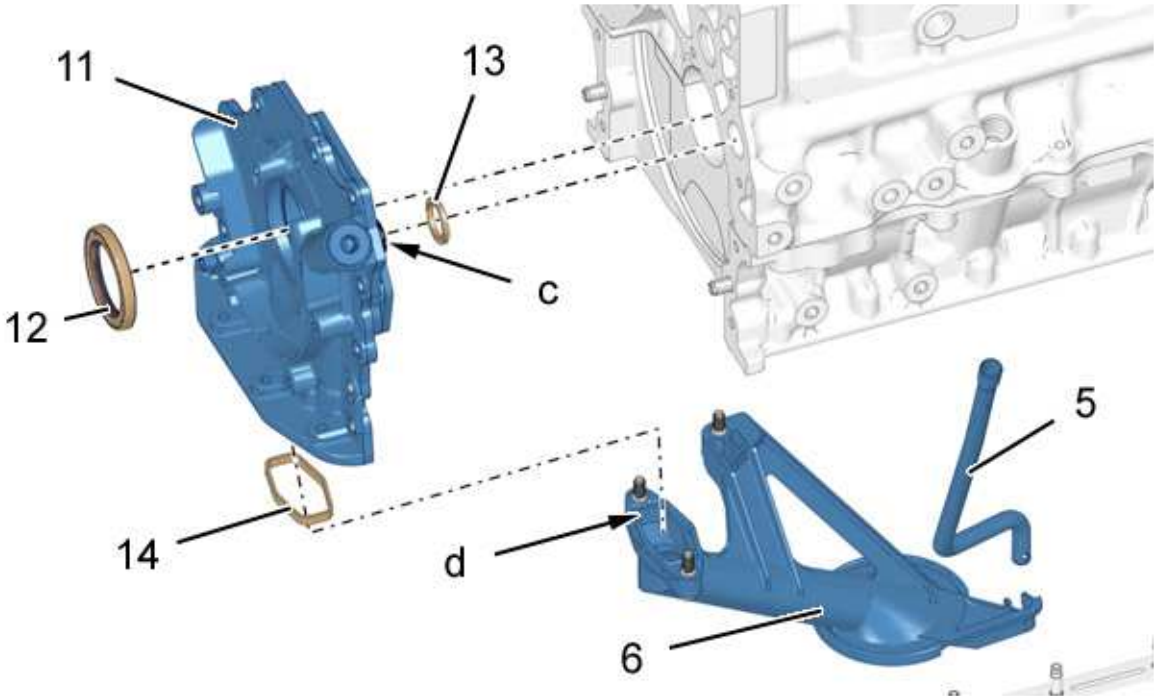

b1fg03td

NOTE : On refitting, all removed seals must be replaced with new seals

Check that the seal (13) is correctly positioned (at "c").

WARNING : Replace the seal (12) of the crankshaft (oil pump side)

Refit :

- The sealing ring (12) (new)
- The oil pump (11)
- The 8 screws (10) pre-coated with thread locking product, index "E3"

NOTE : Check that the track of the engine speed sensor target (9) is not damaged or scratched

Refit :

- The cotter
- The crankshaft gear (8) (Carefully)
- The (7) bolt

NOTE : Check that the seal (14) is correctly positioned (at "d")

Refit :

- The dipstick guide tube (5)
- The oil pump strainer (6)
- The 3 bolts (4)

3 - 2 - Oil sump

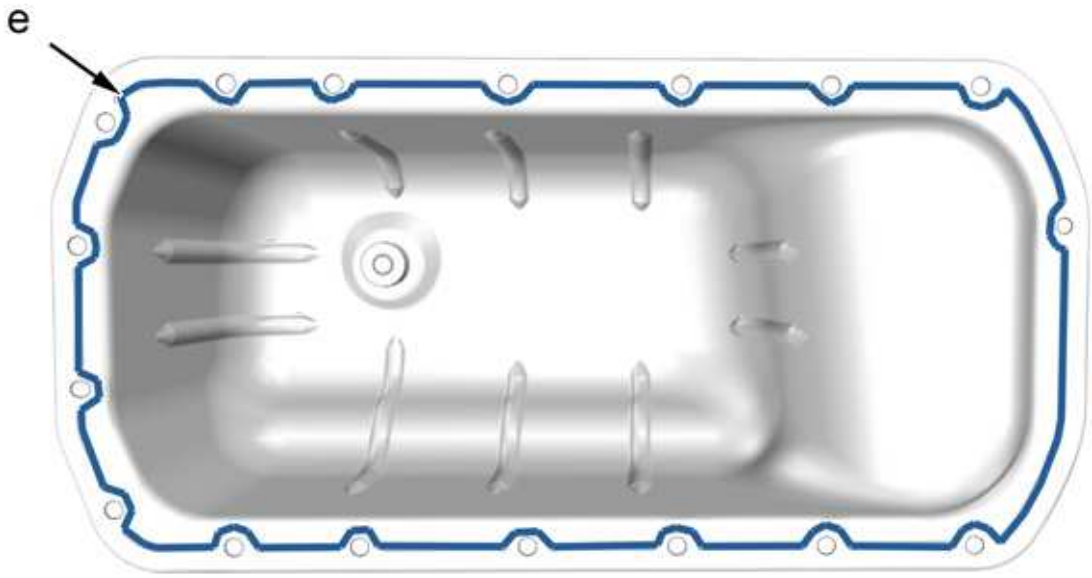

b1fg03wd

NOTE : Apply a bead of sealing compound (index "E10") (at "e")

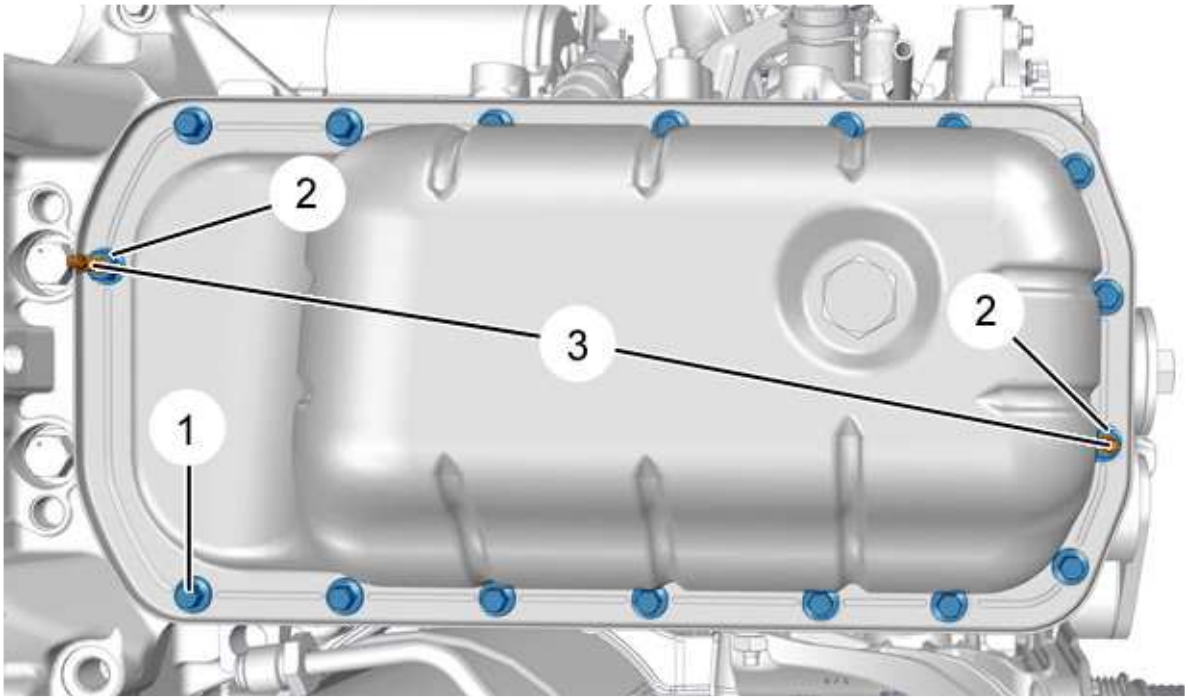

b1fg03zd

Refit the 2 studs (3).

Tighten the studs (3).

Refit :

- The oil sump
- The 2 nuts (2)
- The 15 securing bolts (1)
- The dipstick
- The timing belt
- The engine style cover (according to equipment)

Couple the exhaust line at the rubber tube.

Fill or top up.

> **WARNING :** Perform the operations that are required following a reconnection of the ancillaries battery

Reconnect the ancillaries battery.

Start the engine.

Check the absence of leaks.

Refit :

- The protective panel under the engine (according to equipment)
- The vehicle to its wheels

Stop the engine.

DISMANTLING - RE-ASSEMBLY : COOLANT TEMPERATURE SENSOR

ESSENTIAL : Observe the safety and cleanliness recommendations

1 - TOOLING

tool	Reference	Description
[0188-T]  *e5ab06it*	[0188-T]	plugs kit

2 - REMOVING

Place the vehicle on a 2-post lift.

Disconnect the ancillaries battery.

Remove the under engine protection .

Drain the cooling system.

Detach and move aside the electrical harness from the fusebox .

Remove :

- The ancillaries battery
- The battery tray

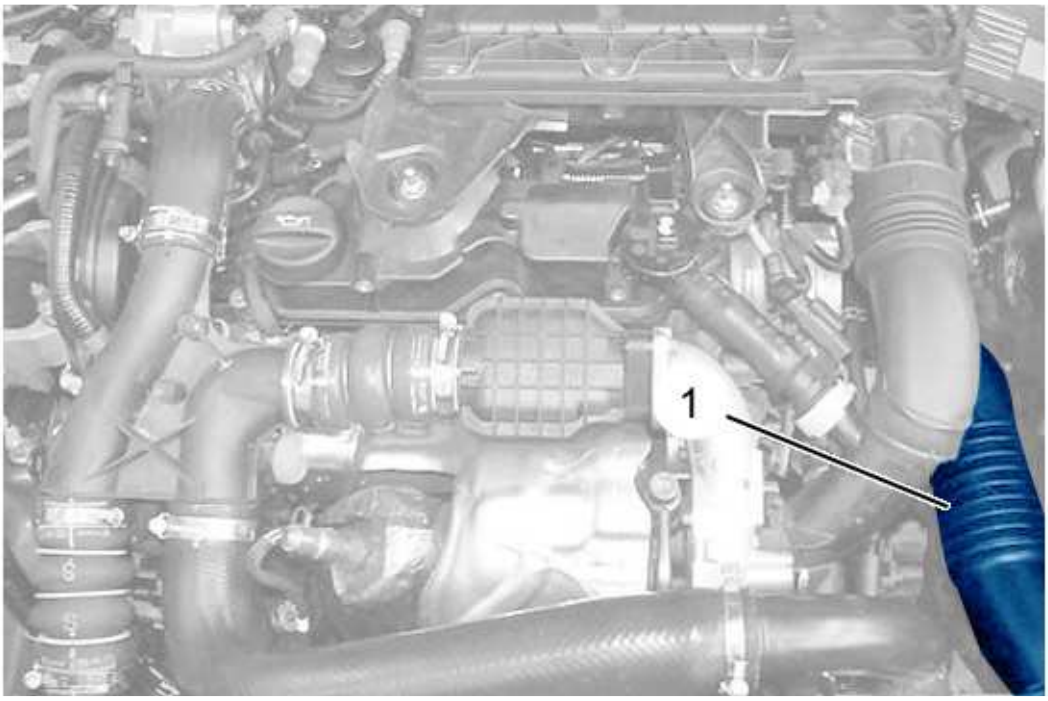

b1gg16ld

Remove the air conduit (1).

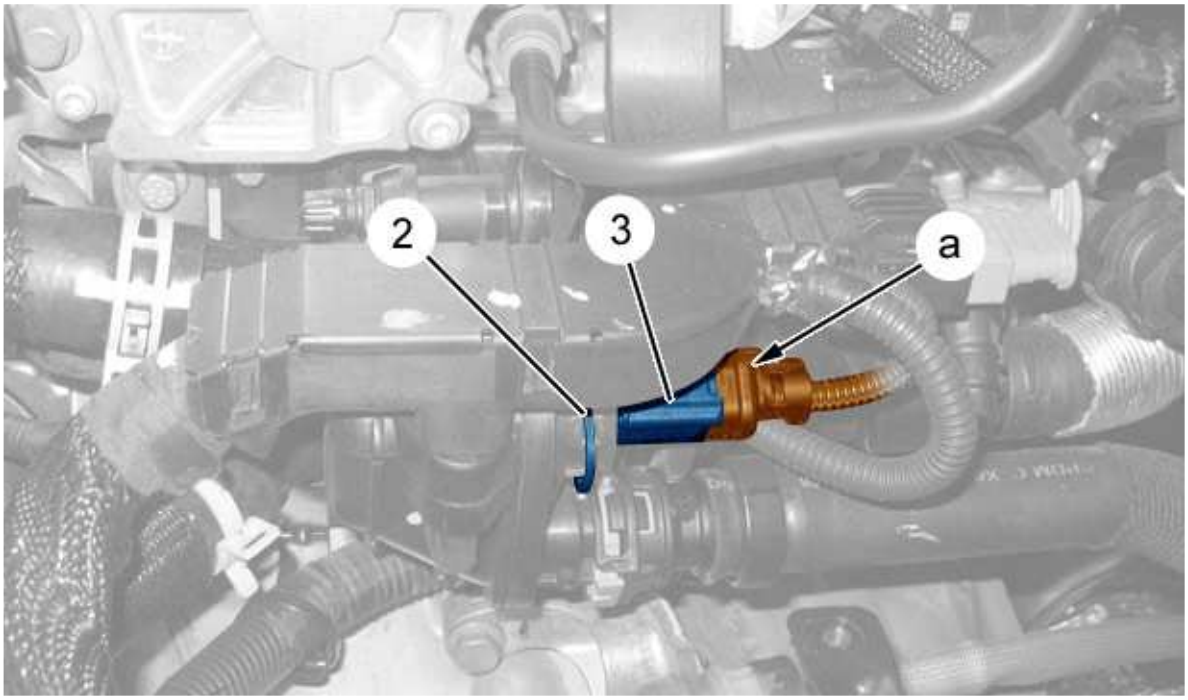

b1gg16md

WARNING : Do not use cutting tools or hammers in any operation to remove-refit components. If the part is dropped or receives a sharp knock, it must be replaced

Disconnect the connector (as "a").

Remove :

- The clip (2)
- The coolant temperature sensor (3)
- Seal

Plug the coolant outlet housing ; Using tool [0188-T].

3 - REFITTING

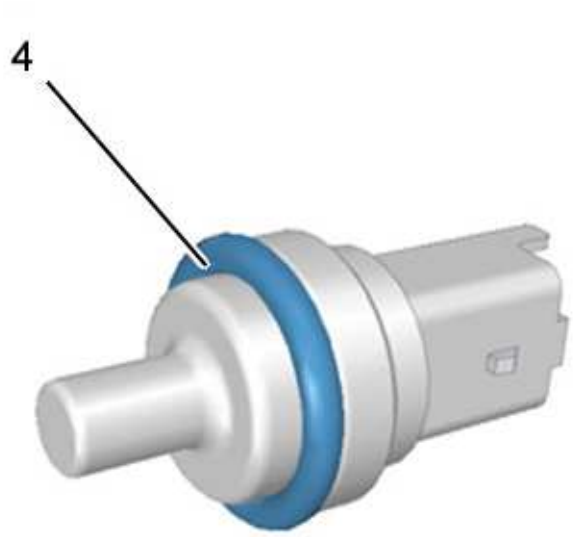

b1gg16nd

WARNING : Replace the seal (4) with a new seal that you have already lubricated

WARNING : Put the seal (4) in place on the coolant temperature sensor (3)

Remove the tool [0188-T].

Refit :

- The coolant temperature sensor (3) complete with a new seal (4)
- The clip (2)

Connect the connector (at "a").

Refit :

- The air duct (1)
- The battery tray
- **The ancillaries battery**

Fasten the electrical harness on the fusebox .

Fill in the coolant circuit and bleed it..

Refit the under-engine protection .

> **WARNING :** Perform the operations that are required following a reconnection of the ancillaries battery

Reconnect the ancillaries battery.

Start the engine.

Check that there are no leaks.

DISMANTLING - RE-ASSEMBLY : COOLANT OUTLET HOUSING

ESSENTIAL : Ensure that the precautions relating to safety and cleanliness are adhered to

1 - TOOLING

Tool	Part number	Description
[0165-2]  *e5ai00ht*	[0165-2]	Pliers for removing elastic clips
[0194-T]  *e5ab05lt*	[0194-T]	Set of plugs

2 - REMOVING

ESSENTIAL : Respect the safety and cleanliness recommendations that are specific to high pressure diesel injection (HDi) engines

Put the vehicle on a two post lift.

Disconnect the ancillaries battery.

Remove the protective plate from under the engine.

Drain the cooling system.

Remove :

- The engine cover
- The air filter lower air duct

Remove :

- The ancillaries battery
- The ancillaries battery tray
- The engine management ECU
- The service battery tray support
- The air filter casing

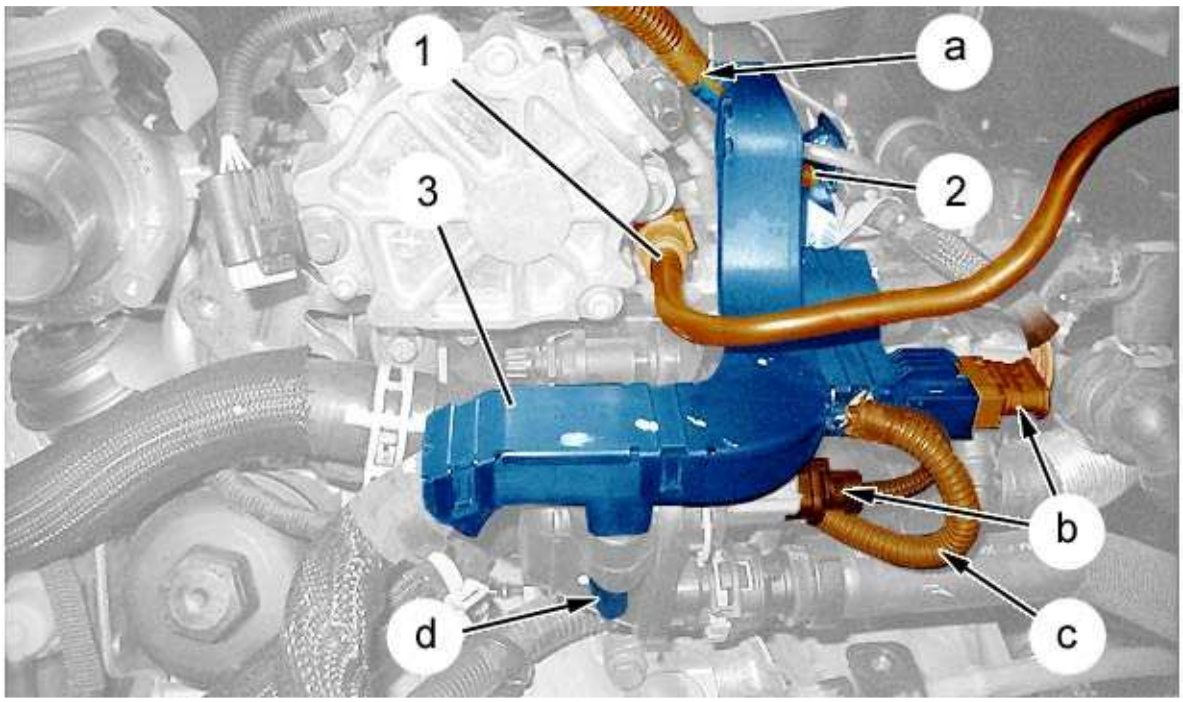

b1gg16td

Disconnect and move aside the union (1).

Remove the bolt (2).

Disconnect and move aside the connectors (At "b").

Unclip the electrical harness support (3) (from below) (at "d") ; Using a small flat screwdriver.

Move aside the electrical harness (3) support .

Unclip the electrical harness (at "a", "c").

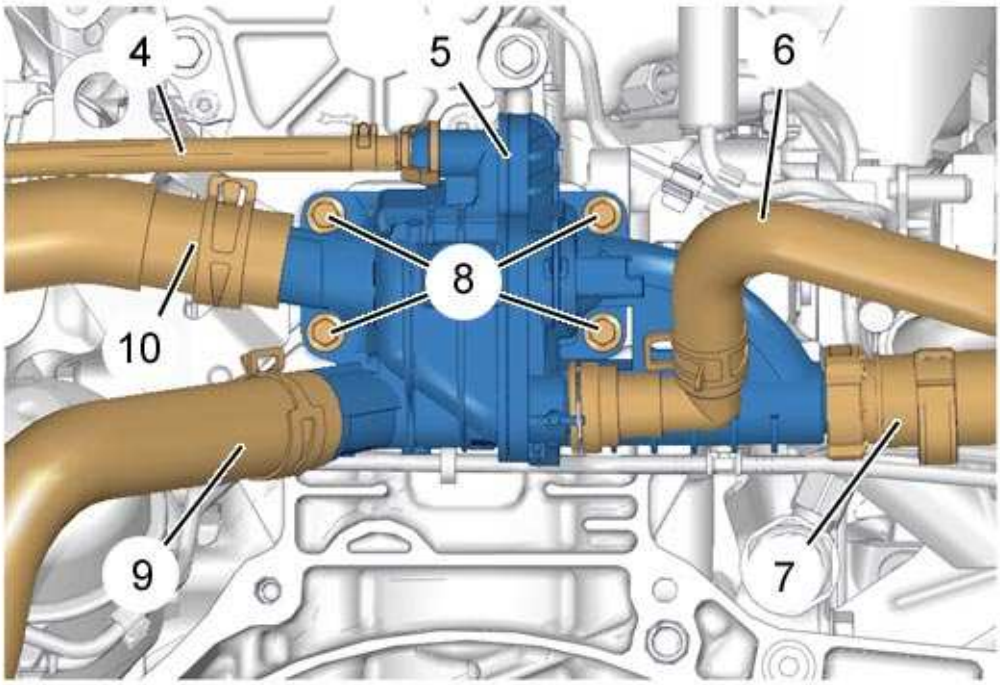

b1gg16rd

WARNING : Do not use sharp tools or a hammer for any part removal-refitting operation. If the part is dropped or receives a sharp knock, it must be replaced

WARNING : Plug the openings ; Using the tool [0194-T]

Detach and move aside :

- The cooling hoses (6), (9), (10) ; Using the tool [0165-2]
- The cooling hoses (4), (7)
- The screws (8)
- The thermostat (5)

3 - REFITTING

WARNING : Observe the tightening torque values

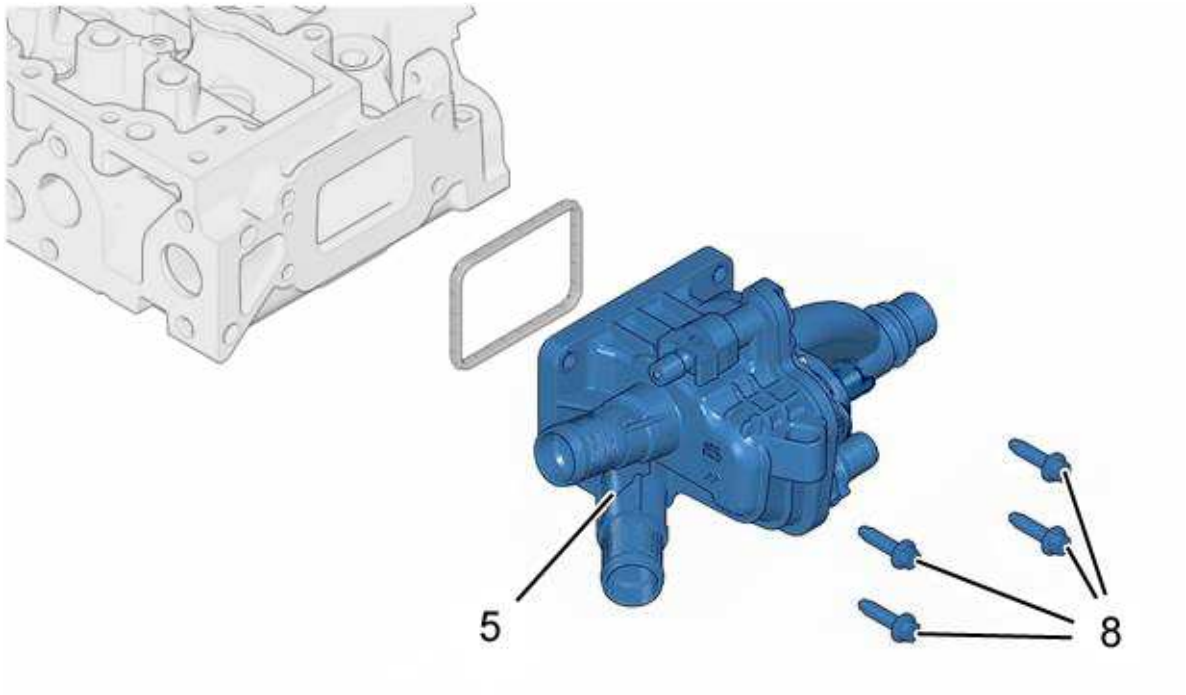

b1gg16sd

Fit the coolant outlet elbow (5) with a new joint.

> **WARNING :** Take care with the positioning of the seal in its location

Refit and tighten the 4 screws (8).

Remove the tools[0194-T].

Recouple :

- The cooling hoses (4), (7)
- The cooling hoses (6), (9), (10) ; Using the tool [0165-2]

Refit the electrical harness support (3) (at "d").

Clip the electrical harness (3) (At a", "c",).

Connect the connectors (at "b").

Refit bolt (2).

Connect the union (1).

Fit :

- The service battery tray support
- The engine management ECU
- The ancillaries battery tray

- The ancillaries battery
- The air filter lower air duct
- The engine cover

> **WARNING :** Perform the operations that are required following a reconnection of the ancillaries battery

Reconnect the ancillaries battery.

Fill and bleed the cooling system.

Refit the protective panel under the engine.

REMOVING - REFITTING : COOLANT PUMP

ESSENTIAL : Ensure that the precautions relating to safety and cleanliness are adhered to

1 - PARTS WHICH MUST ALWAYS BE REPLACED

Designation	Quantity
Coolant pump seal	1

2 - REMOVING

ESSENTIAL : Respect the safety and cleanliness recommendations that are specific to high pressure diesel injection (HDi) engines

Place the vehicle on a two-post lift.

Disconnect the ancillaries battery.

Drain the engine cooling circuit.

Remove :

- The ancillary drive belt
- The timing belt

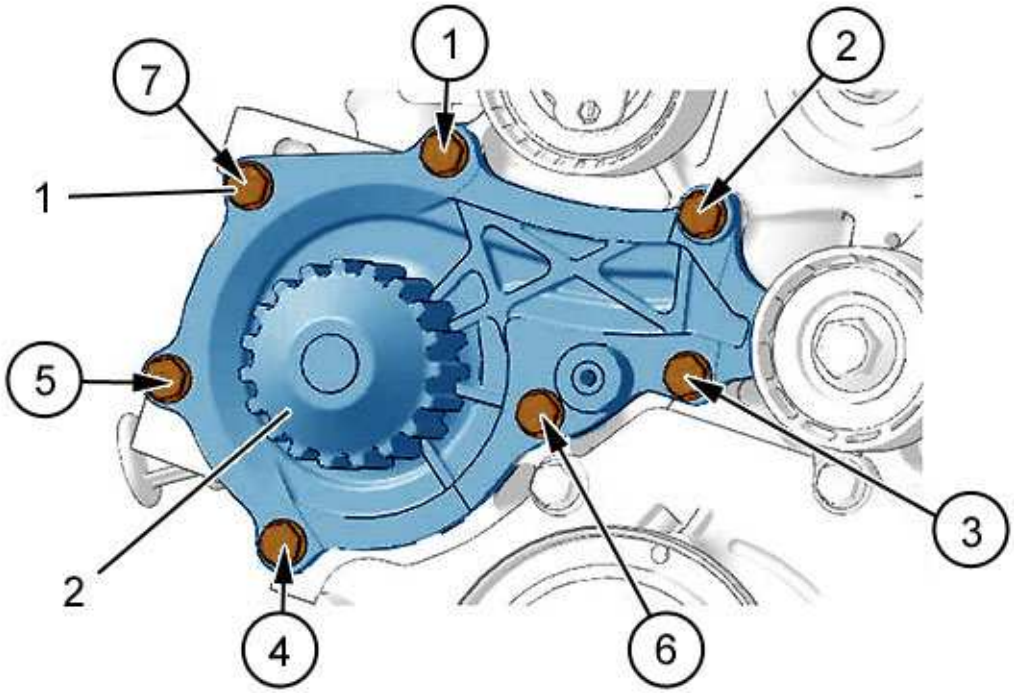

b1gm0apd

Remove :

- The coolant pump (2) bolts (1) (In the order shown)
- Coolant pump (2)
- The seal

3 - REFITTING

> **WARNING :** Adhere to the tightening torques

> **WARNING :** Replace systematically the water pump seal

> **WARNING :** The seal faces should not show any traces of impacts or scratches

Fit :

- Coolant pump (2) (equipped with a new seal)
- The coolant pump (2) bolts (1)
- The timing belt
- The ancillary drive belt

Fill and bleed the engine cooling circuit.

> **WARNING :** Perform the operations that are required following a reconnection of the ancillaries battery

Reconnect the ancillaries battery.

REMOVING - REFITTING : COOLANT INLET MANIFOLD

ESSENTIAL : Observe the safety and cleanliness recommendations

1 - TOOLING

tool	Reference	Designation
[0165-2]  *e5ai007t*	[0165-2]	Cable pliers for flexible clips

2 - REMOVING

Place the vehicle on a 2-post lift.

Disconnect the ancillaries battery.

Remove the under engine protection .

Drain the cooling system.

Remove :

- The front right wheel
- The engine cover (according to equipment)
- The ancillaries battery cover
- The ancillaries battery
- The air filter housing
- The acoustic shield
- The exhaust front flexible pipe

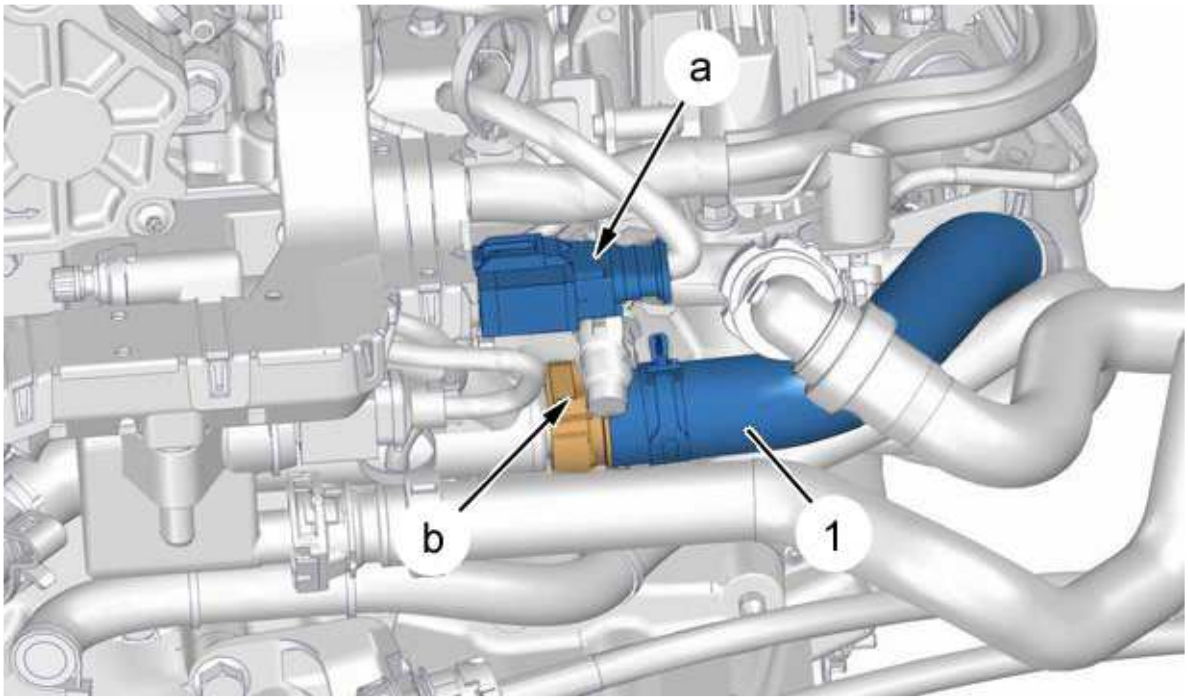

b1gg0h1d

Disconnect the connector (as "a").

Uncouple the hose (1) from the coolant outlet housing (as "b").

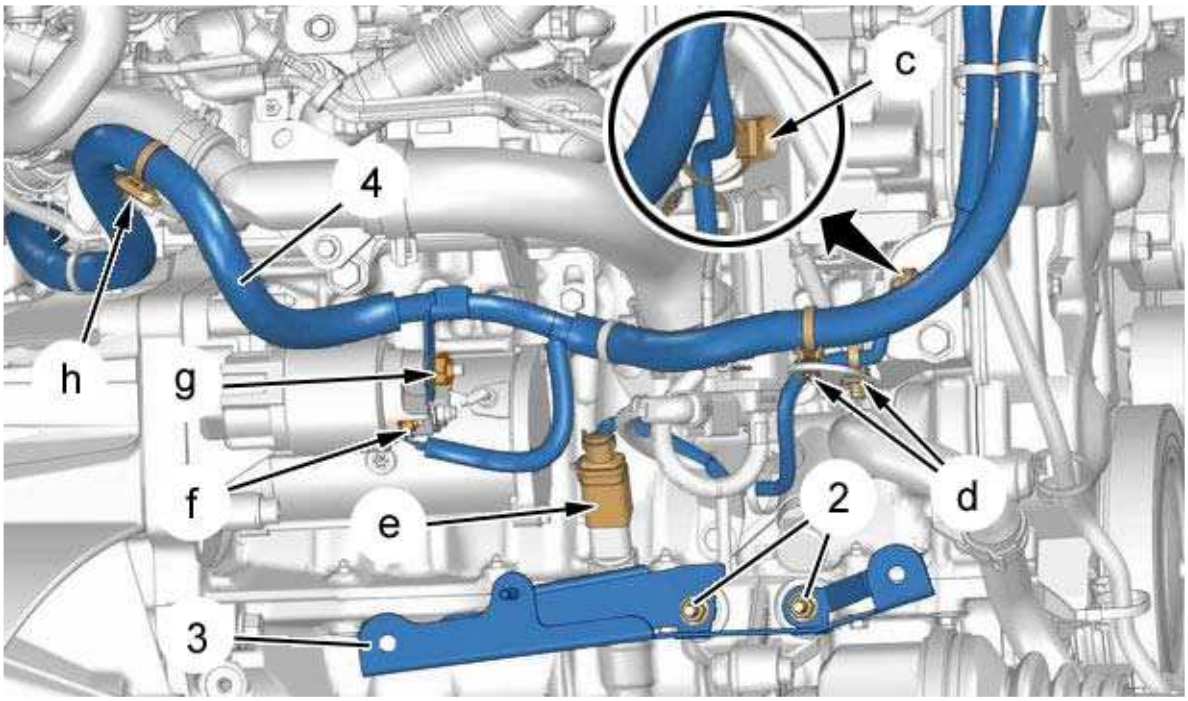

b1gg1jad

Remove :

- The nuts (2)

- The acoustic shield support (3)

Disconnect the connector (as "e") (according to equipment).

Unclip the clips (as "c", "d", "h") (according to equipment).

Disconnect the starter connections (as "g", "f").

Move aside the electrical harness (4).

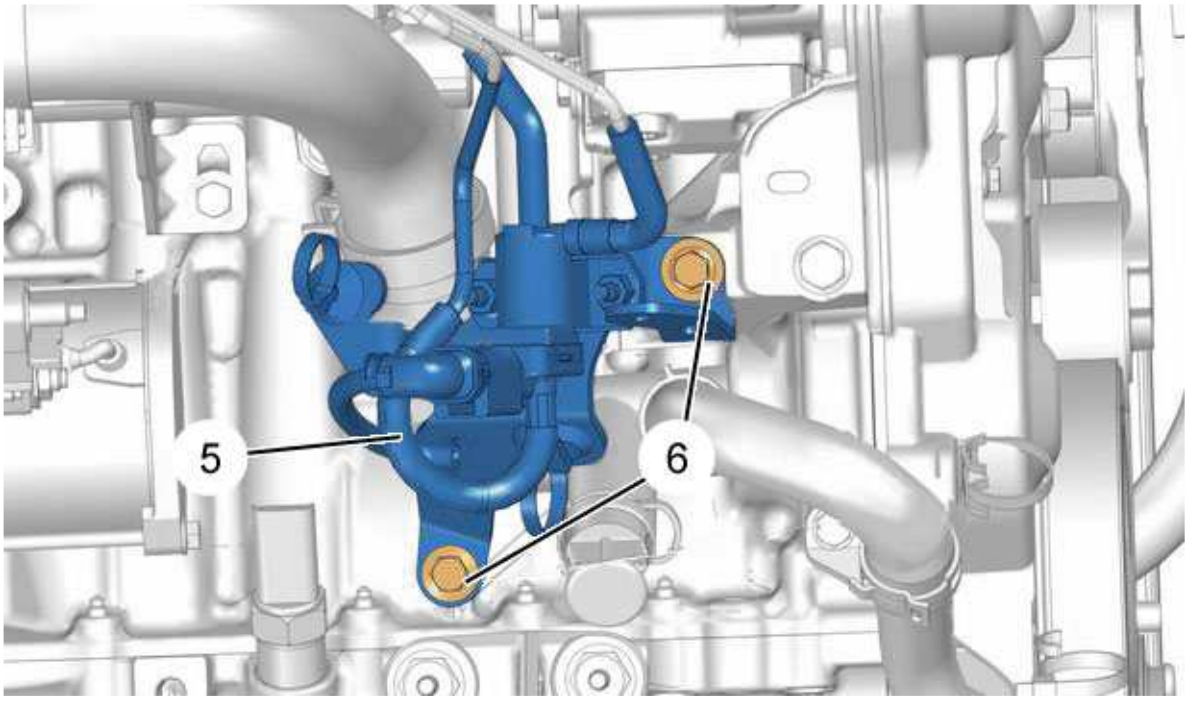

b1gg1jbd

Remove the bolts (6).

Move aside the electrovalve support (5) with the electrovalve .

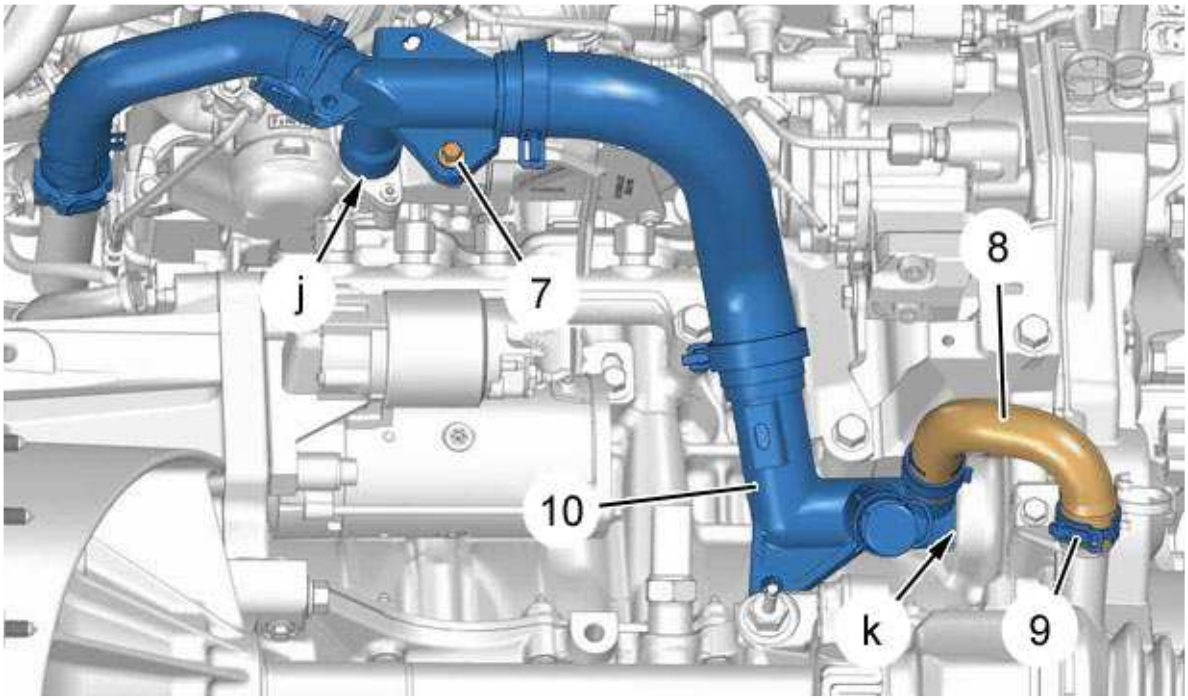

b1gg1jcd

Remove the collar (9) ; Using tool [0165-2].

Uncouple the pipe (8).

Remove the bolt (7).

Move aside the coolant inlet manifold (10) from the EGR valve (as "k").

Move aside the coolant inlet manifold (10) from the cylinder block (as "j").

Remove the coolant inlet manifold assembly (10) and the hose (8) (from below).

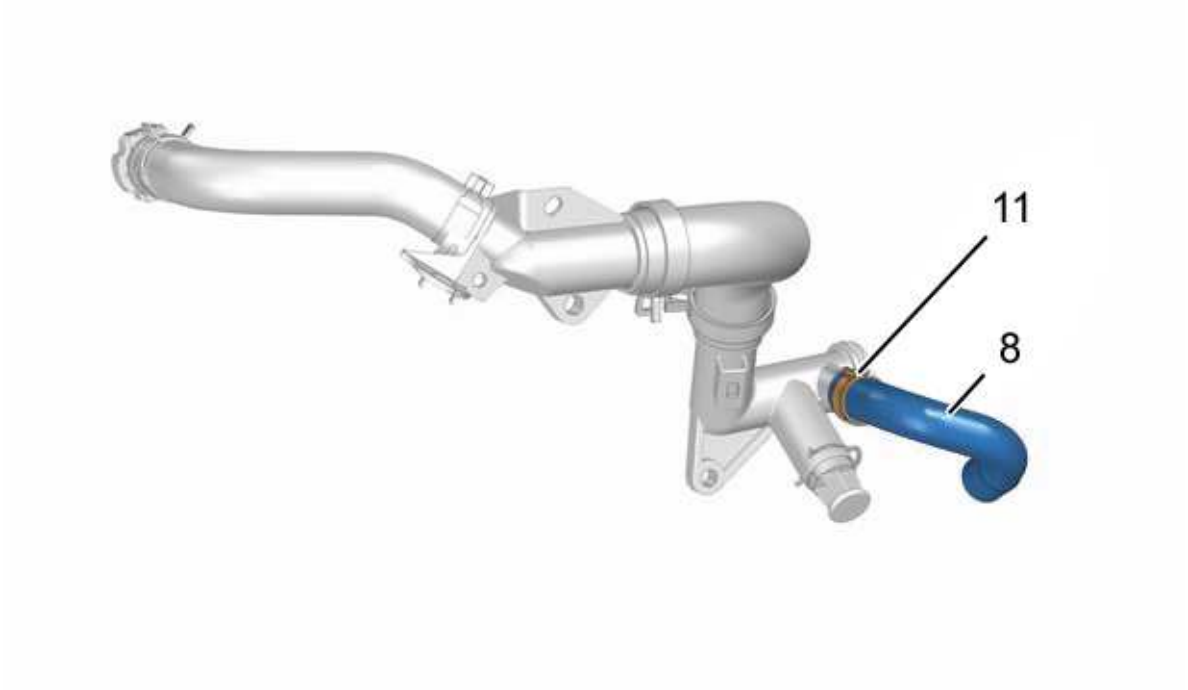

b1gg1jdd

WARNING : Note the orientation of the hose (8)

Remove :

- The clip (11) ; Using tool [0165-2]
- The pipe (8)

3 - REFITTING

3 - 1 - Preparation

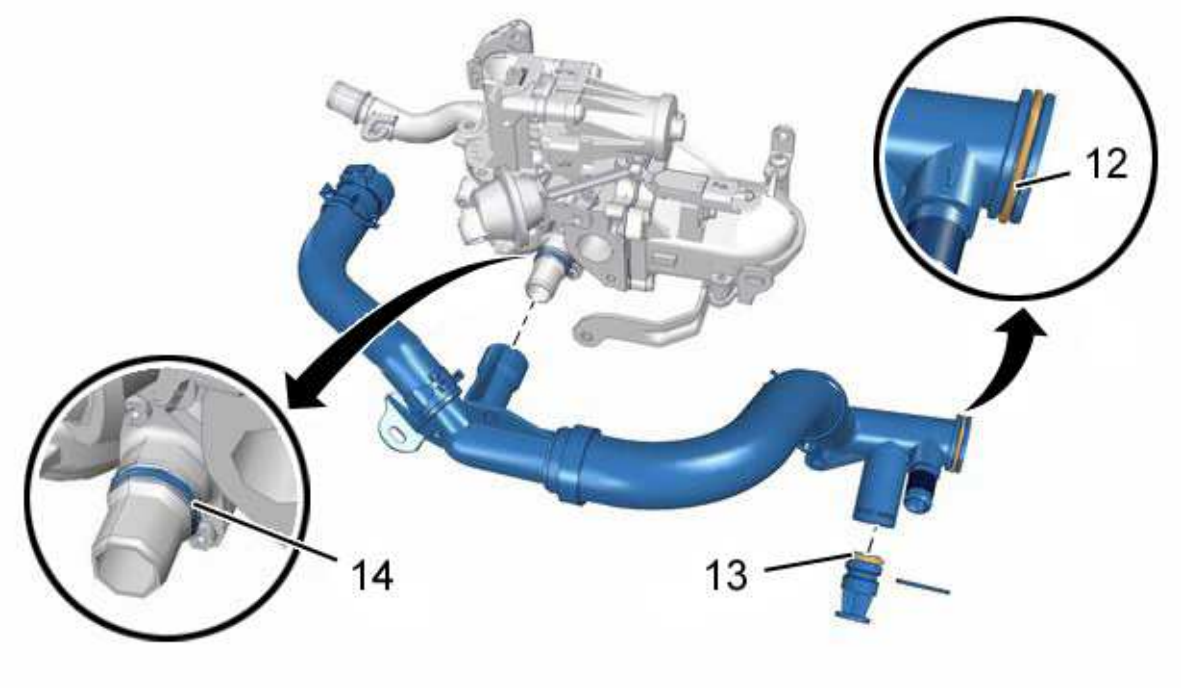

b1gg1jed

Refit the seals (12), (13), (14) (new).

Lubricate the seals (12), (13), (14) ; With engine oil .

3 - 2 - Subsequent operations

WARNING : Adhere to the tightening torques

SPECIAL FEATURE :

FOR : 1CB7 - B0FBF : TURBO DIESEL DV6DTED

FOR : 1CB7 - B0FBM : DV6C TURBO DIESEL

FOR : 1CB8 - B0FBM : DV6C TURBO DIESEL

FOR : 1CB9 - B0FBF : TURBO DIESEL DV6DTED

FOR : 1CB9 - B0FBH : TURBO DIESEL DV6DU

FOR : 1CB9 - B0FBG : DV6ETED4 TURBO DIESEL

FOR : 1CB9 - B0FBJ : DIESEL TURBO DV6EU

FOR : 1CB9 - B0FBM : DV6C TURBO DIESEL

FOR : 1CMJ - B0FBM : DV6C TURBO DIESEL

FOR : 1CMJ - B0FLT : DIESEL DV6C UE6 85KW

FOR : 1C58 - B0FBF : TURBO DIESEL DV6DTED

FOR : 1C58 - B0FBM : DV6C TURBO DIESEL

FOR : 2CB9 - B0FBH : TURBO DIESEL DV6DU

FOR : 2CB9 - B0FBM : DV6C TURBO DIESEL

FOR : 2CB9 - B0FBJ : DIESEL TURBO DV6EU

Tightening torques :

- **Engine**
- **Road wheels**

WARNING : Take care with the positioning of the fuel bleed pipe

Refit :

- The hose (8) on the coolant inlet manifold (10) with the orientation noted when removing it
- The clip (11) ; Using tool [0165-2]

Refit the coolant inlet manifold (10) and hose (8) assembly (from below).

Position the coolant inlet manifold (10) on the cylinder block (as "h").

Position the coolant inlet manifold (10) on the EGR valve (as "g").

Refit bolt (7).

Connect the hose (8).

Refit the clip (9) ; Using tool [0165-2].

Position the electrovalve support (5) with the electrovalve.

Refit the bolts (6).

Position the electrical harness (4).

Unclip the clips (as "c", "d", "f").

Connect the connector (as "e").

Refit :

- The acoustic shield support (3)

- The nuts (2)

Couple the hose (1) to the coolant outlet housing (as "b").

Connect the connector (as "a").

Fill and bleed the cooling system.

Refit :

- The exhaust front flexible pipe
- The acoustic shield
- The air filter housing
- The ancillaries battery
- The ancillaries battery cover
- The engine cover (according to equipment)
- The front right wheel

> **WARNING :** Perform the operations that are required following a reconnection of the ancillaries battery

Reconnect the ancillaries battery.

4 - CHECK

Start the engine.

Check that there are no leaks.

Wait for the fan to engage and then disengage.

5 - ADDITIONAL OPERATION

Refit the under-engine protection .

CHECK : TURBOCHARGER PRESSURE

ESSENTIAL : Observe the safety and cleanliness recommendations

1 - TOOLING

NOTE : The pressure gauge [1529] and the corresponding adaptor can be used in place of the pressure gauge indicated

Equipment : Diagnostic tool.

tool	Reference	Designation
[0171-A] [4073-T.A]  *e5ab0x8t*	[0171-A] [4073-T.A]	pressure gauge for checking the turbocharging pressure
[0171-G4]  *e5ab0g4t*	[0171-G4]	Tool for checking inlet air pressure-vacuum

2 - REMOVING

WARNING : Prior to any operation on a sensor or an actuator, read the memory of faults and do the necessary tests, with the aid of the diagnostic tool

Disconnect the ancillaries battery.

Remove the engine style cover (according to equipment).

Move aside the engine rear acoustic shield .

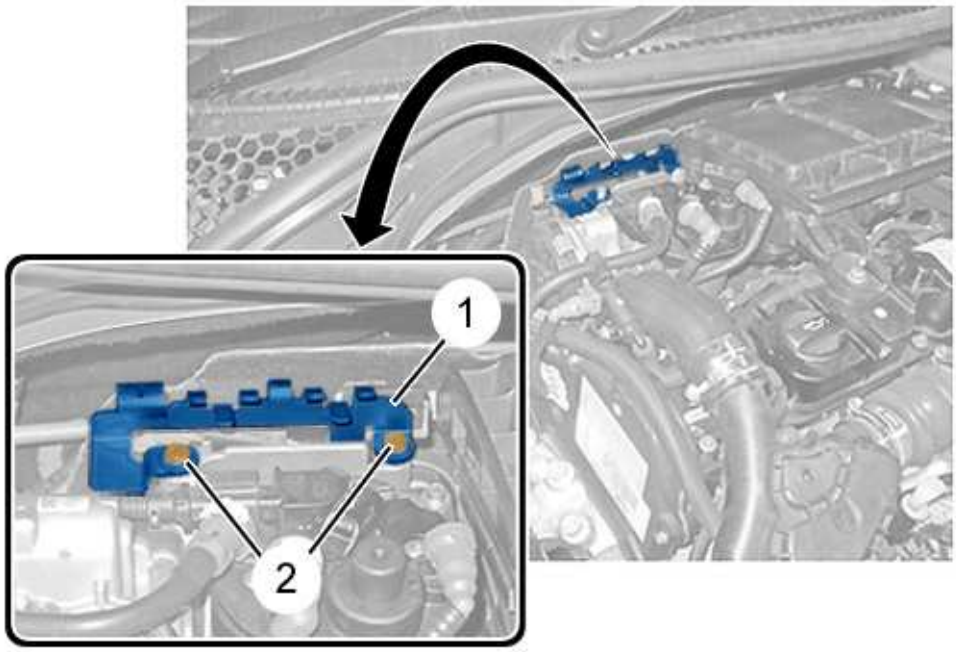

b1hdze7d

Remove :

- The bolts (2)
- The engine rear acoustic shield support (1)

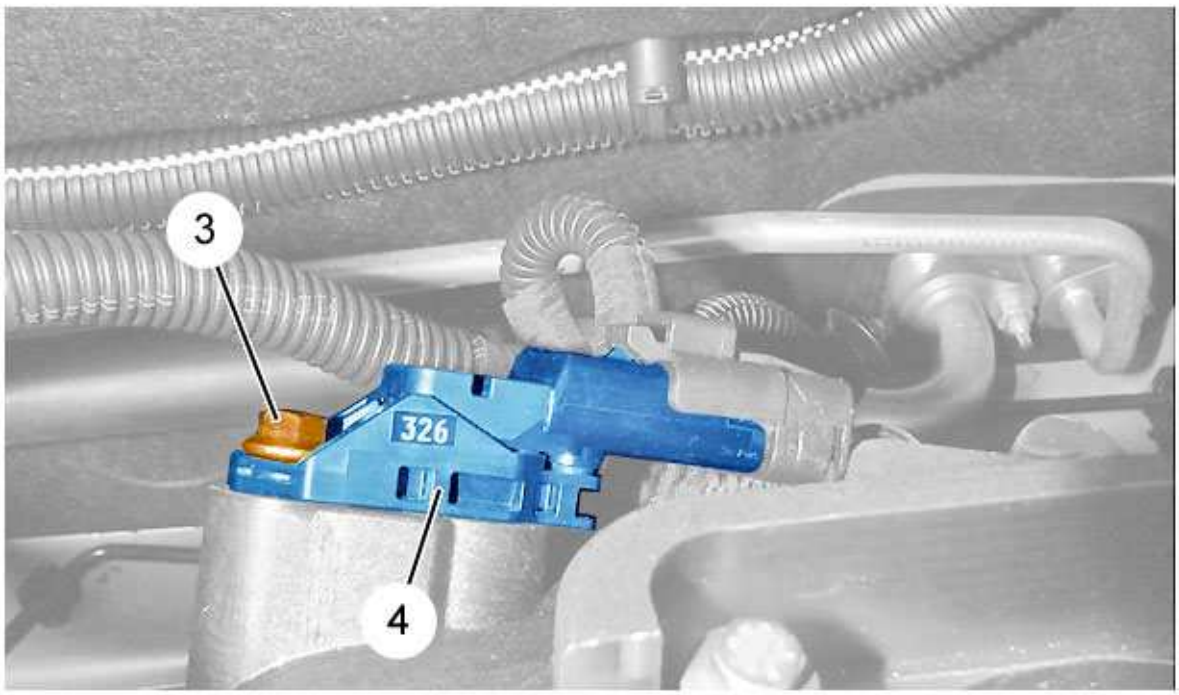

b1hdzaxd

Remove :

- The (3) bolt
- The turbocharging pressure sensor (4)

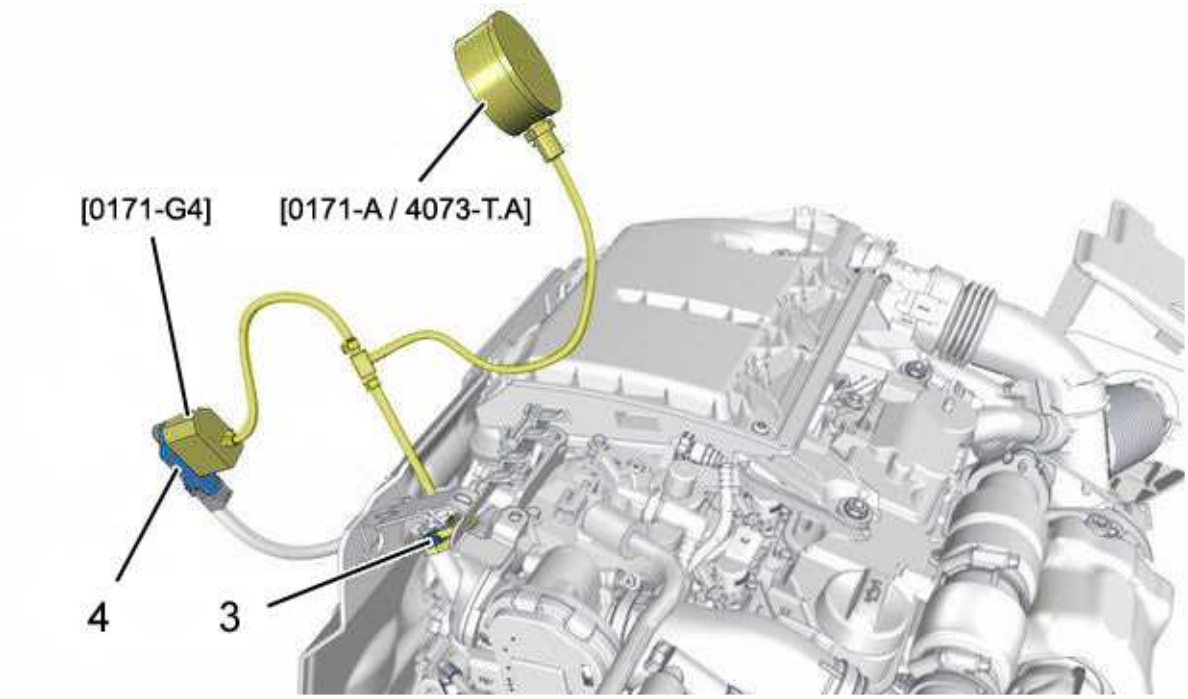

b1hdzczd

Connect :

- The tool [0171-G4] in place of the turbocharging pressure sensor (4) ; Tighten the bolt (3)
- The turbocharging pressure sensor (4) on the tool [0171-G4] ; Tighten the bolt of the tool [0171-G4]
- The tool [0171-A / 4073-T.A] on the tool [0171-G4]

Reconnect the ancillaries battery.

Connect the diagnostic equipment to the vehicle's diagnostic socket.

Place the diagnostic tool in parameter measures.

Start the engine.

SPECIAL FEATURE :

FOR : 1PMJ - B0FLT : DIESEL DV6C UE6 85KW

FOR : 1CMJ - B0FLT : DIESEL DV6C UE6 85KW

FOR : 1CB7 - B0FBM : DV6C TURBO DIESEL

FOR : 1CB9 - B0FBM : DV6C TURBO DIESEL

FOR : 1CWA - B0FBM : DV6C TURBO DIESEL

FOR : 1CXA - B0FBM : DV6C TURBO DIESEL

FOR : 1CX7 - B0FBM : DV6C TURBO DIESEL

FOR : 1CYA - B0FBM : DV6C TURBO DIESEL

FOR : 1C58 - B0FBM : DV6C TURBO DIESEL

FOR : 1PA7 - B0FBM : DV6C TURBO DIESEL

FOR : 1PB9 - B0FBM : DV6C TURBO DIESEL

FOR : 1PTB - B0FBM : DV6C TURBO DIESEL

FOR : 1PTC - B0FBM : DV6C TURBO DIESEL

FOR : 1PT7 - B0FBM : DV6C TURBO DIESEL

FOR : 1PW2 - B0FBM : DV6C TURBO DIESEL

FOR : 1CB8 - B0FBM : DV6C TURBO DIESEL

FOR : 1PIA - B0FBM : DV6C TURBO DIESEL

FOR : 1CMJ - B0FBM : DV6C TURBO DIESEL

FOR : 1PMJ - B0FBM : DV6C TURBO DIESEL

FOR : 1CH5 - B0FBM : DV6C TURBO DIESEL

FOR : 1PT9 - B0FBM : DV6C TURBO DIESEL

Checking the turbo pressure values.

3 - REFITTING

WARNING : Adhere to the tightening torques

Disconnect the ancillaries battery.

Remove tools [0171-G4] and [0171-A / 4073-T.A].

Refit :

- The turbocharging pressure sensor (4)
- The (3) bolt
- The engine rear acoustic shield support (1)
- The bolts (2)
- The engine rear acoustic shield
- The engine style cover (according to equipment)

WARNING : Perform the operations that are required following a reconnection of the ancillaries battery

Reconnect the ancillaries battery.

CHECK : HIGH PRESSURE FUEL CIRCUIT

ESSENTIAL : Observe the safety and cleanliness recommendations

1 - TOOLING

tool	Reference	Designation
[1613-A] 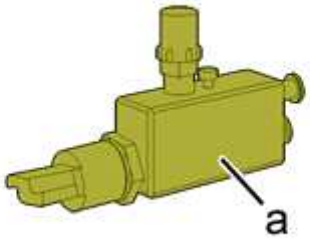 *e5ab08xt*	[1613-A]	dummy high pressure fuel injection rail
[1613-B]  *e5ab08yt*	[1613-B]	fuel decompression container
[1613-C]  *e5ab08zt*	[1613-C]	dummy flow electrovalve
		fuel pressure

[1613-D]  *e5ab090t*	[1613-D]	display
[1613-E1] 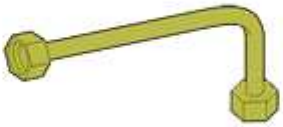 *e5ab091t*	[1613-E1]	high pressure fuel pipe
[1613-F] 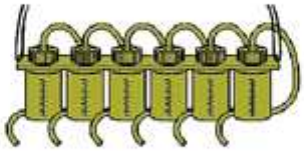 *e5ad012t*	[1613-F]	containers for return of diesel injector leaks
[1613-G]  *e5ab092t*	[1613-G]	container for measuring the high pressure fuel injection pump return flow

[1613-H]  *e5ab093t*	[1613-H]	union for return of leaks on diesel injector (DELPHI injection)
[1613-J]  *e5ab094t*	[1613-J]	union for return of leaks on diesel injector (BOSCH/S injection)
[1613-K]  *e5ad011t*	[1613-K]	plugs kit
[1613-N]  *e5ab0n1t*	[1613-N]	union for return of leaks on diesel injector (engine DV6C Euro 5) (SIEMENS injection)

[1613-Q]  *e5ab0xgt*	[1613-Q]	union for return of leaks on diesel injector (engine DV Euro 5 / Euro 6) (BOSCH injection)

2 - IDENTIFICATION

Engine code	Factory symbol	Injection system
DW10	RHL	SIEMENS
	RHR	SIEMENS
	RHS	BOSCH
	RHZ	BOSCH
	RHX	BOSCH
	RHV	BOSCH/SIEMENS
	RHY	BOSCH/SIEMENS
	RHS	SIEMENS
DW12	4HY	BOSCH
	4HW	BOSCH
	4HX	BOSCH
	4HZ	BOSCH
DV4	8HX	BOSCH/SIEMENS
	8HV	DELPHI
	8HY	BOSCH
	8HZ	BOSCH
	8HU	BOSCH
	8HS	BOSCH
	8HR	BOSCH
	8HP	BOSCH
DV6	9HX	BOSCH
	9HZ	BOSCH
	9HY	BOSCH
	9HV	BOSCH
	9HT	BOSCH
	9HW	BOSCH
	9HX	BOSCH
	9HT	BOSCH
	9HU	BOSCH
	9HS	BOSCH
	9HR	SIEMENS
	9HL	SIEMENS
	9HE	BOSCH

	9HJ	BOSCH
	9HK	BOSCH
	9HF	BOSCH
	9HP	BOSCH
	9HG	SIEMENS
	9HN	BOSCH
	BHW	BOSCH
	BHX	BOSCH
	BHY	BOSCH
	BHZ	BOSCH
F28 SOFIM	8140.43S	BOSCH
	8140.23	BOSCH
	8140.43N	BOSCH
DT17	UHZ	SIEMENS

3 - PRELIMINARY CHECKS

> **ESSENTIAL :** Respect the safety and cleanliness recommendations that are specific to high pressure diesel injection (HDi) engines

3 - 1 - Electrical circuit

Check :

- The charge of the ancillaries battery
- The fault codes using the diagnostic tool
- The fuel high pressure value using the diagnostic tool : Measure parameters

3 - 2 - High pressure environment

Check :

- The quantity of fuel in the tank : 15 litres minimum
- Fuel quality (if in doubt over the fuel quality, use an auxiliary tank with a filter, filled with fuel which you know where it came from)
- The low pressure fuel supply circuit (see the relevant operation)

3 - 3 - Engine operation

Check the camshaft drive (timing belt).

Check the components that could cause lack of engine power :

- Obstructed exhaust
- Clogged air filter
- Clogged fuel filter

4 - INJECTION SYSTEM BOSCH

4 - 1 - Checking the pressure sensor on the fuel high pressure common injection rail, DW10/DW12 engines (absence of engine starting)

Disconnect the connector of the fuel high pressure sensor.

Operate the starter :

- The engine starts : Replace the fuel high pressure sensor
- The engine will not start : Continue the checking

4 - 2 - Checking the diesel injectors

> **WARNING :** Do not uncouple the rubber pipes from the diesel injector leak return unions

Uncouple the diesel injector leak return unions.

Fit the unions of tools [1613-J / 1613-Q] on the diesel injectors (depending on the version).

Couple the containers of tools [1613-F] on the unions of tools [1613-J / 1613-Q] (depending on the version).

Attach the container carrier bar [1613-F] to the engine bonnet.

Operate the starter :

- The engine starts : Allow the engine to idle for 2 minutes
- The engine will not start : Operate the starter motor for 15 seconds

> **WARNING :** The volume of fuel returning to the diesel injectors is a few millilitres, the volume of fuel returning to the diesel injectors increases as a function of the condition of the engine (wear)

Replace any diesel injectors that have a fuel return flow greater than that for the other injectors.

> **NOTE :** After replacing one or more diesel injectors, do a diesel injectors check

The functioning of the diesel injectors is correct, Continue the checking.

4 - 3 - Checking the high pressure fuel pump

Disconnect the connector from the camshaft position sensor.

> **WARNING :** Before slackening, clean the high pressure unions (See the corresponding operation)

Remove the high pressure pipe linking the high pressure fuel pump to the high pressure fuel common injection rail.

Depending on the type of high pressure fuel pump, connect tool [1613-A] with the aid of either tool [1613-E1] or the fuel high pressure pipe already removed.

Couple the container of tool [1613-B] on tool [1613-A].

Connect tool [1613-D] on tool [1613-A].

Fuel pressure control, Using tool [1613-D] :

- Press the test button
- The display on tool [1613-D] indicates the charge of the ancillaries battery
- The display on tool [1613-D] indicates the last fuel pressure value tested (for 5 seconds)
- Press the test button and action the starter at the same time
- When the "stop" message appears on the display of the tool [1613-D], stop the action on the starter
- The display on the tool [1613-D] indicates the maximum fuel pressure value (for 5 seconds)
- The display on the tool [1613-D] indicates the residual pressure value

NOTE : The display of tool [1613-D] flashes if the fuel pressure value is higher than 50 bars

The fuel pressure is higher than 300 bars : Do the preliminary checks once again.

The fuel pressure is lower than 300 bars : Continue the checking.

WARNING : Open the fuel decompression screw (at "a") before uncoupling the tool [1613-A]

4 - 4 - Checking the fuel pressure regulator (If available in replacement parts)

Replace the fuel pressure regulator with a new regulator.

Check the high pressure fuel pump.

The fuel pressure is higher than 300 bars : The original fuel pressure regulator is defective.

The fuel pressure is lower than 300 bars : Replace the high pressure fuel pump.

WARNING : Replace the high pressure fuel pipe that was removed

NOTE : If replacing the fuel high pressure pump, do not lose the new regulator

5 - INJECTION SYSTEM SIEMENS

5 - 1 - Checking the pressure sensor on the fuel high pressure common injection rail, DW10/DW12

SOFIM engines (absence of engine starting)

Disconnect the connector of the fuel high pressure sensor.

Operate the starter :

- The engine starts : Replace the fuel high pressure sensor
- The engine will not start : Continue the checking

5 - 2 - Checking the diesel injectors

> **WARNING :** Do not uncouple the rubber pipes from the diesel injector leak return unions

Uncouple the diesel injector leak return unions.

Fit the unions of tools [1613-J / 1613-N] on the diesel injectors (depending on the version).

Couple the containers of tools [1613-F] on the unions of tools [1613-J / 1613-N] (depending on the version).

Attach the container carrier bar [1613-F] to the engine bonnet.

Operate the starter :

- The engine starts : Allow the engine to idle for 2 minutes
- The engine will not start : Operate the starter motor for 15 seconds

> **WARNING :** The volume of fuel returning to the diesel injectors is a few millilitres, the volume of fuel returning to the diesel injectors increases as a function of the condition of the engine (wear)

Replace any diesel injectors that have a fuel return flow greater than that for the other injectors.

> **NOTE :** After replacing one or more diesel injectors, do a diesel injectors check

The functioning of the diesel injectors is correct : Continue the checking.

5 - 3 - Checking the high pressure fuel pump

Disconnect the connector from the camshaft position sensor.

> **WARNING :** Before slackening, clean the high pressure unions (See the corresponding operation)

Remove the high pressure pipe linking the high pressure fuel pump to the high pressure fuel

common injection rail.

Depending on the type of high pressure fuel pump, connect tool [1613-A] with the aid of either tool [1613-E1] or the fuel high pressure pipe already removed.

Couple the container of tool [1613-B] on tool [1613-A].

Connect tool [1613-D] on tool [1613-A].

Fuel pressure control Using tool [1613-D] :

- Press the test button
- The display on tool [1613-D] indicates the charge of the ancillaries battery
- The display on tool [1613-D] indicates the last fuel pressure value tested (for 5 seconds)
- Press the test button and action the starter at the same time
- When the "stop" message appears on the display of the tool [1613-D], stop the action on the starter
- The display on the tool [1613-D] indicates the maximum fuel pressure value (for 5 seconds)
- The display on the tool [1613-D] indicates the residual pressure value

  NOTE : The display of tool [1613-D] flashes if the fuel pressure value is higher than 50 bars

The fuel pressure is higher than 300 bars : Do the preliminary checks once again.

The fuel pressure is lower than 300 bars : Replace the high pressure fuel pump.

> **WARNING :** Open the fuel decompression screw (at "a") before uncoupling the tool [1613-A]

> **WARNING :** Replace the high pressure fuel pipe that was removed

6 - INJECTION SYSTEM DELPHI

6 - 1 - Hydraulic balance

Unplug :

- The diesel injectors
- The flow electrovalve

Connect tool [1613-C] in place of the flow electrovalve.

Check the pressure value in parameter measures using the diagnostic tool.

The fuel pressure is higher than 1050 bars : Redo the fuel supply check.

The fuel pressure is lower than 1050 bars : Continue the checking.

6 - 2 - Checking the diesel injectors

> **WARNING :** Do not uncouple the rubber pipes from the diesel injector leak return unions

Uncouple the diesel injector leak return unions.

Couple in their place the unions of tools (1613-H).

Couple the containers of tools [1613-F] on the diesel injector leak return unions.

Attach the container carrier bar to the engine bonnet.

Method of operation :

- The engine starts : Using the diagnostic tool, start the leak detection test (1 single cycle)
- The engine will not start : Operate the starter motor for 5 seconds

> **WARNING :** With the engine running, the maximum volume should not be greater than 37 ml With the engine not running, the return should be less than 10 cm in the connecting pipes

Replace any diesel injectors that have a fuel return flow greater than 37 ml, or more than 10 cm (engine not running).

> **NOTE :** After replacing one or more diesel injectors, do a diesel injectors check

The functioning of the diesel injectors is correct, Continue the checking.

6 - 3 - Checking the high pressure fuel pump

Disconnect the connector from the camshaft position sensor.

> **WARNING :** Before slackening, clean the high pressure unions (See the corresponding operation)

Remove the high pressure pipe linking the high pressure fuel pump to the high pressure fuel common injection rail.

Depending on the type of high pressure fuel pump, connect tool [1613-A] with the aid of either tool [1613-E1] or the fuel high pressure pipe already removed.

Couple the container of tool [1613-B] on tool [1613-A].

Connect tool [1613-D] on tool [1613-A].

Fuel pressure control Using tool [1613-D] :

- Press the test button
- The display on tool [1613-D] indicates the charge of the ancillaries battery
- The display on tool [1613-D] indicates the last fuel pressure value tested (for 5 seconds)
- Press the test button and action the starter at the same time
- When the "stop" message appears on the display of the tool [1613-D], stop the action on the starter
- The display on the tool [1613-D] indicates the maximum fuel pressure value (for 5 seconds)
- The display on the tool [1613-D] indicates the residual pressure value

NOTE : The display of tool [1613-D] flashes if the fuel pressure value is higher than 50 bars

The fuel pressure is higher than 1050 bars : Do the preliminary checks once again.

The fuel pressure is lower than 1050 bars : Replace the high pressure fuel pump.

WARNING : Open the fuel decompression screw (at "a") before uncoupling the tool [1613-A]

WARNING : Replace the high pressure fuel pipe that was removed

REMOVING - REFITTING : ENGINE SPEED SENSOR

ESSENTIAL : Observe the safety and cleanliness instructions

1 - PARTS WHICH MUST ALWAYS BE REPLACED

Description	Quantity
Crankshaft pulley fixing bolt	1

2 - TOOLING

Tool	Reference	Description
[0194-C]  *e5ab08st*	[0194-C]	flywheel stop

3 - REMOVING

Lift and support the vehicle with the wheels free.

Disconnect the ancillaries battery.

Take down :

- The RH front road wheel
- The RH front splash shield
- The engine undershield (according to equipment)
- The protection cover from the ancillary drive belt (according to equipment)
- The ancillary drive belt
- The crankshaft pulley cover (according to equipment)

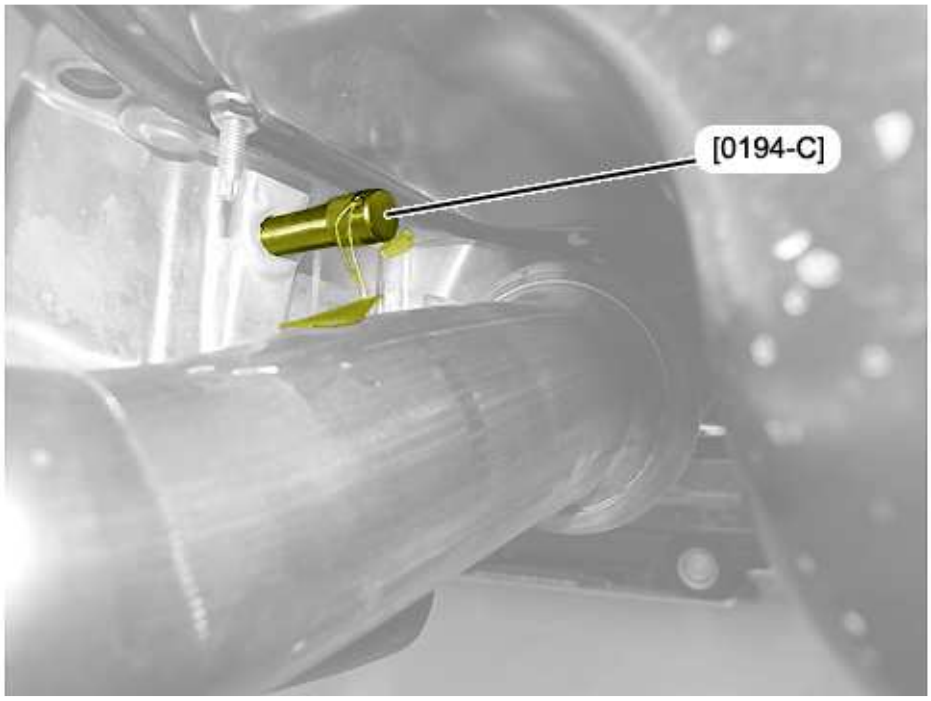

b1ed04td

WARNING : Turn the engine by means of the crankshaft pulley screw in the normal direction of rotation

Rotate the engine by means of the crankshaft pulley screw to bring it to the flywheel locking position.

Lock the flywheel ; Using tool [0194-C].

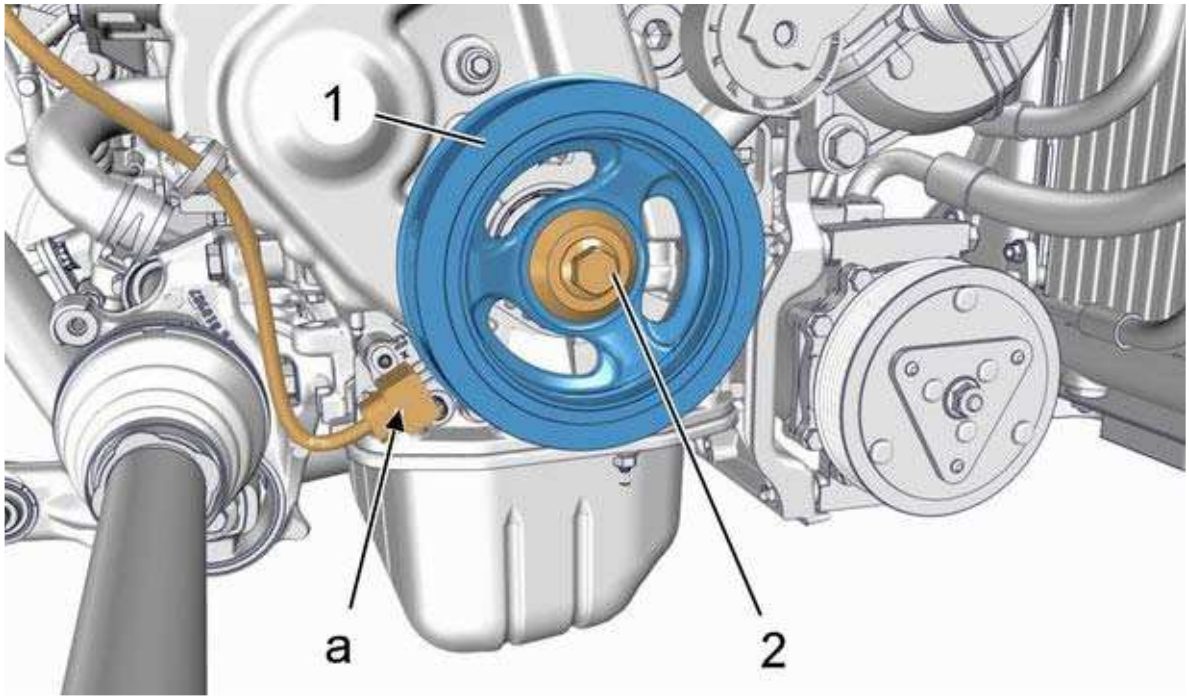

b1bm0erd

Take down :

- The crankshaft pulley bolt (2)
- The crankshaft pulley (1)

Disconnect the connector (at "a").

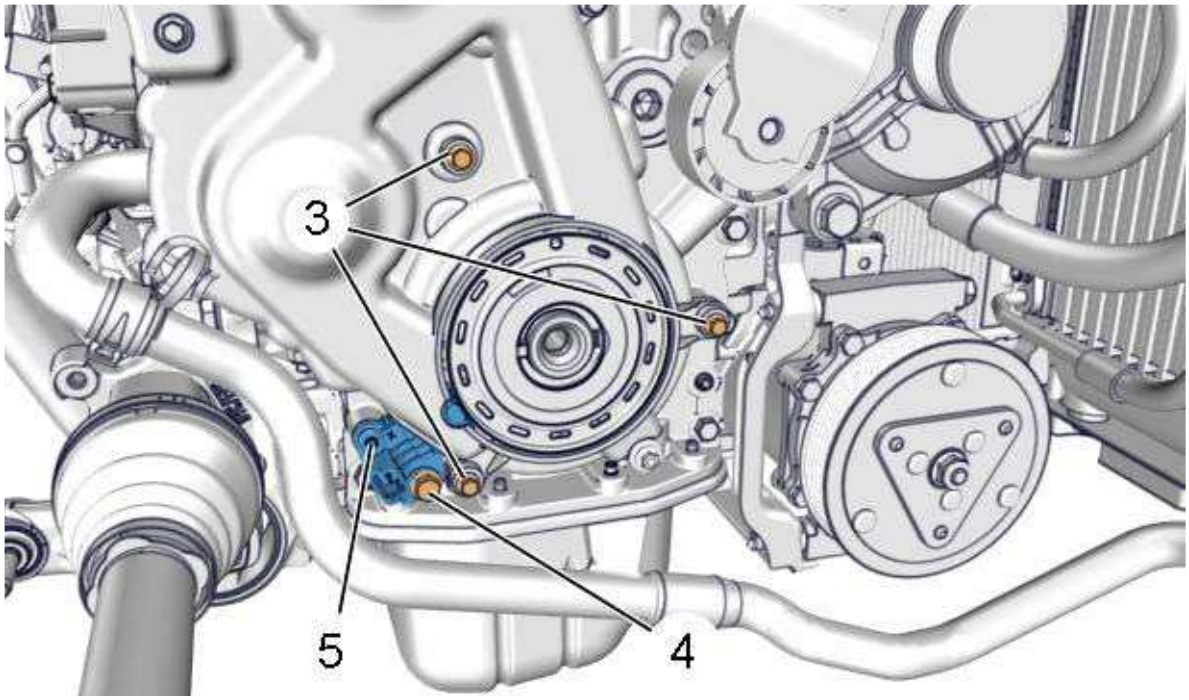

b1bm0esd

> **WARNING :** The magnetic track should carry no sign of damage and should not be approached by any other magnetic source ; Otherwise, the crankshaft pinion will have to be replaced

Take down :

- The bolts (3) and (4)
- The engine speed sensor (5)

NOTE : Move aside the timing protection cover (Carefully)

4 - REFITTING

> **WARNING :** Adhere to the tightening torques

SPECIAL FEATURE :

FOR : 1CMJ - B0FLT : DIESEL DV6C UE6 85KW

FOR : 1CB7 - B0FBM : DV6C TURBO DIESEL

FOR : 1CB7 - B0FBF : TURBO DIESEL DV6DTED

FOR : 1CB8 - B0FBM : DV6C TURBO DIESEL

FOR : 1CB9 - B0FBJ : DIESEL TURBO DV6EU

FOR : 1CB9 - B0FBG : DV6ETED4 TURBO DIESEL

FOR : 1CB9 - B0FBM : DV6C TURBO DIESEL

FOR : 1CB9 - B0FBF : TURBO DIESEL DV6DTED

FOR : 1CWA - B0FBM : DV6C TURBO DIESEL

FOR : 1CWA - B0FBF : TURBO DIESEL DV6DTED

FOR : 1CXA - B0FBM : DV6C TURBO DIESEL

FOR : 1CXA - B0FBF : TURBO DIESEL DV6DTED

FOR : 1CX7 - B0FBM : DV6C TURBO DIESEL

FOR : 1CYA - B0FBM : DV6C TURBO DIESEL

FOR : 1CYA - B0FBF : TURBO DIESEL DV6DTED

FOR : 1C58 - B0FBM : DV6C TURBO DIESEL

FOR : 1CMJ - B0FBM : DV6C TURBO DIESEL

FOR : 1CM3 - B0FBF : TURBO DIESEL DV6DTED

FOR : 1CH5 - B0FBM : DV6C TURBO DIESEL

FOR : 1CH5 - B0FBF : TURBO DIESEL DV6DTED

Tightening torques :

- **Road wheels**
- **Engine**

Fit :

- The engine speed sensor (5)
- The bolts (3) and (4)
- The crankshaft pulley (1)
- The crankshaft pulley bolt (2) (new)

Reconnect the connector (at "a").

Remove tool [0194-C].

Fit :

- The crankshaft pulley cover (according to equipment)
- The ancillary drive belt
- The ancillary drive pulley protective casing (according to equipment)
- The RH front splash shield
- The engine undershield (according to equipment)
- The RH front road wheel
- The vehicle to its wheels

> **WARNING :** Perform the operations that are required following a reconnection of the ancillaries battery

Reconnect the ancillaries battery.

5 - CONTROLLED

Start the engine.

Check the operation of the engine speed sensor (5) ; Using the diagnostic equipment.

Stop the engine.

REMOVING - REFITTING : FUEL FILTER

ESSENTIAL : Observe the safety and cleanliness recommendations

1 - TOOLING

Equipment :

- Degreasing product (Type SODIMAC)
- Cleaning tray
- Brush

tool	Reference	Designation
[0194-T]  *e5ab05lt*	[0194-T]	Set of plugs
[1604-C] [4215-T] 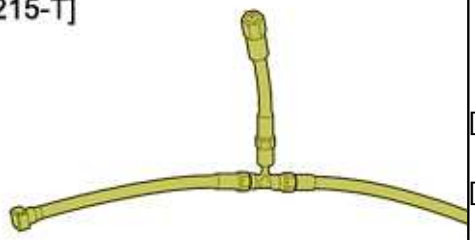 *e5ab0vlt*	[1604-C] [4215-T]	unions for bleeding the diesel filter
[1520-B] [5705-T] 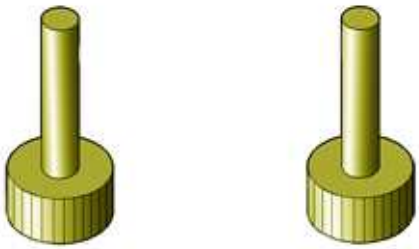 *e5ab0vrt*	[1520-B] [5705-T]	plugs for click-fit unions

2 - REMOVING

ESSENTIAL : **Respect the safety and cleanliness recommendations that are specific to high pressure diesel injection (HDi) engines**

Put the vehicle on a hoist.

Disconnect the battery.

Remove :

- The protective panel under the engine
- The engine style cover (according to equipment)

2 - 1 - Fuel filter

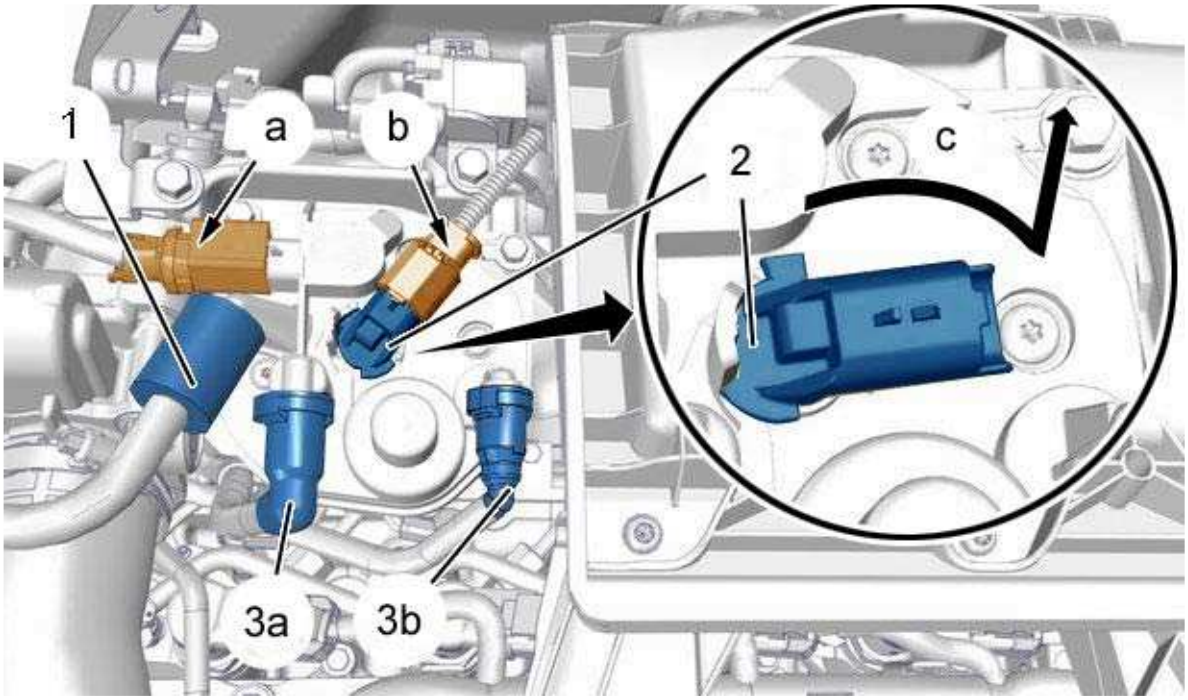

b1hg1nxd

Place the tray underneath the fuel bleed pipe outlet (below the engine compartment).

Disconnect and move aside the connector (at "b") (Water in diesel fuel detector) (according to equipment).

> **NOTE :** The water in diesel detector acts as a lock for the water bleed screw (2) on the fuel filter

Unlock : The water bleed screw (2) (Rotate clockwise).

Raise the water bleed screw (2) fully (In the direction of the arrow "c").

Allow the liquid to flow out.

Disconnect and move aside the connector (at "a").

Clean the unions (1), (3a), (3b) ; Using the degreasing product, the brush and the cleaning tray.

Uncouple the connectors (1), (3a), (3b).

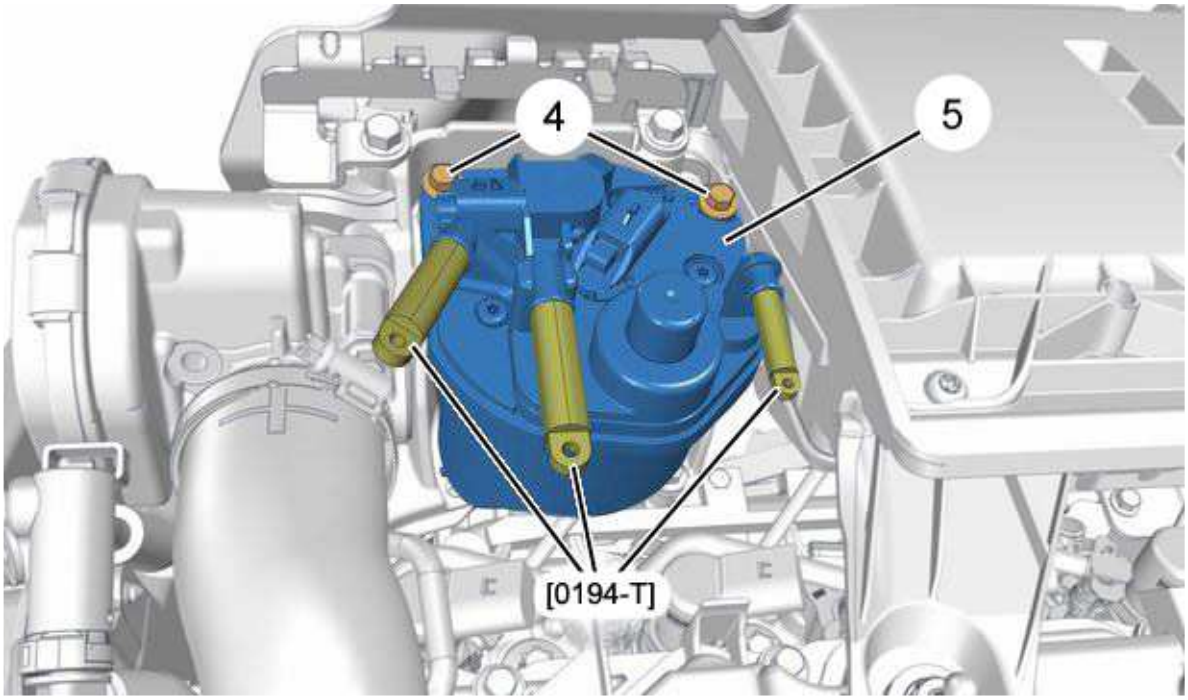

b1hg14sd

> **WARNING :** Plug the openings when a union is uncoupled ; Using the tools [1520-B / 5705-T]

> **WARNING :** Close the pipes on the fuel filter ; Using the tools [0194-T]

Slacken the bolts (4) (captive screws).

> **WARNING :** With great care, vertically disengage the fuel filter (5) from the fuel filter support (risk of damage)

Remove the fuel filter (5).

2 - 2 - Fuel filter element

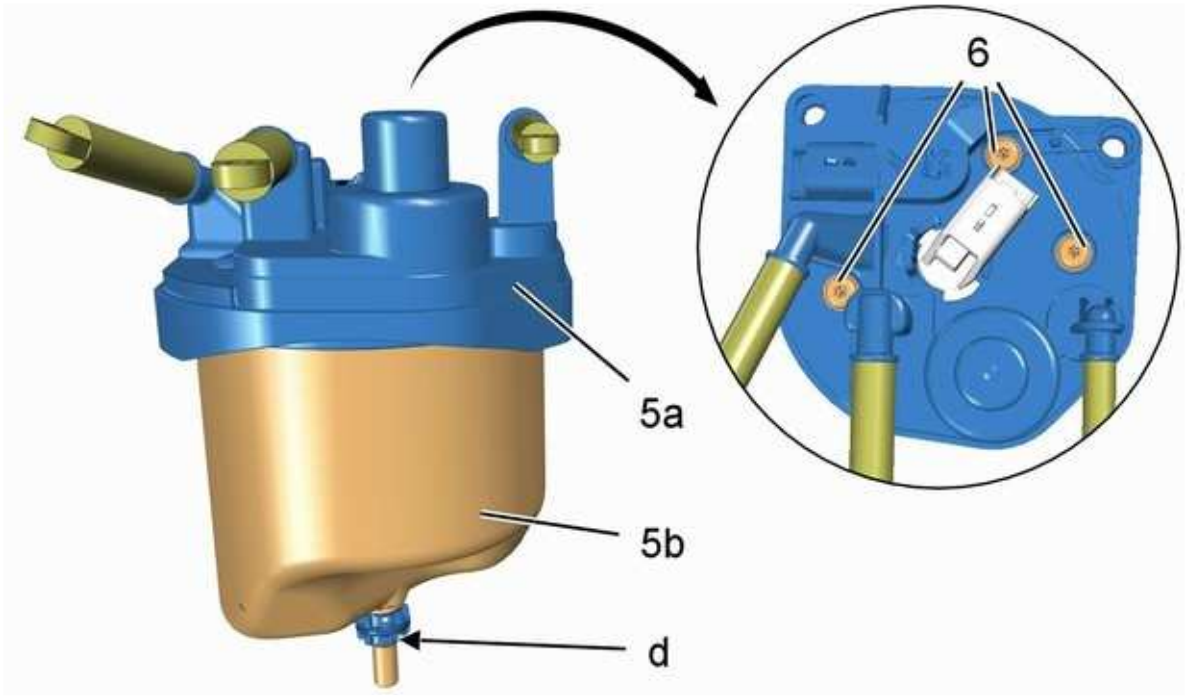

b1hg1nzd

> **WARNING :** The water in diesel fuel detector, the priming pump and the diesel fuel heater are integral with the cover (5a) of the fuel filter (5). If there is any anomaly, replace the fuel filter (5) cover (5a) in its entirety

Check that the centring ring is present (at "d").

> **WARNING :** Place the cover (5a) of the fuel filter (5) upside down, in a spot that is secure and clean

Remove :

- The bolts (6)
- The filter element (5b) from the cover (5a) of the fuel filter (5)

3 - REFITTING

> **ESSENTIAL :** Respect the safety and cleanliness recommendations that are specific to high pressure diesel injection (HDi) engines

> **WARNING :** Adhere to the tightening torques

> **WARNING :** At refitting, all the removed seals must be replaced with new seals

WARNING : Open the bag containing the fuel filter (5) just prior to refitting

3 - 1 - Fuel filter element

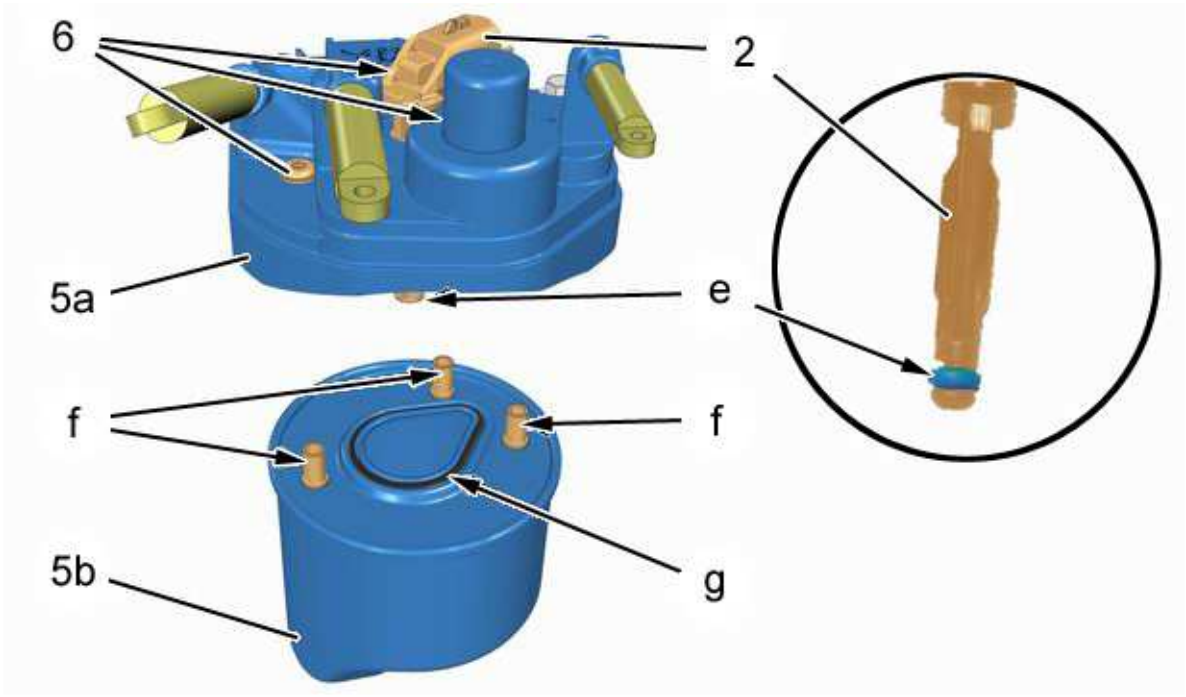

b1hg1o2d

NOTE : Check the condition of the seal (at "e") ; If there is any anomaly, replace the fuel filter (5) cover (5a) in its entirety

Unlock : The water bleed screw (2) (High position).

Refit the seal (at "g") (new).

WARNING : Be careful when positioning of the cover (5a) of the fuel filter (5) (guides "f")

Position the cover (5a) of the fuel filter (5) on the filter element (5b) (guides "f").

Refit the screws (6) without tightening.

Push the water bleed screw (2) fully.

Lock : The water bleed screw (2) (Turn anticlockwise).

Retighten the bolts (6) to the correct torque.

3 - 2 - Fuel filter

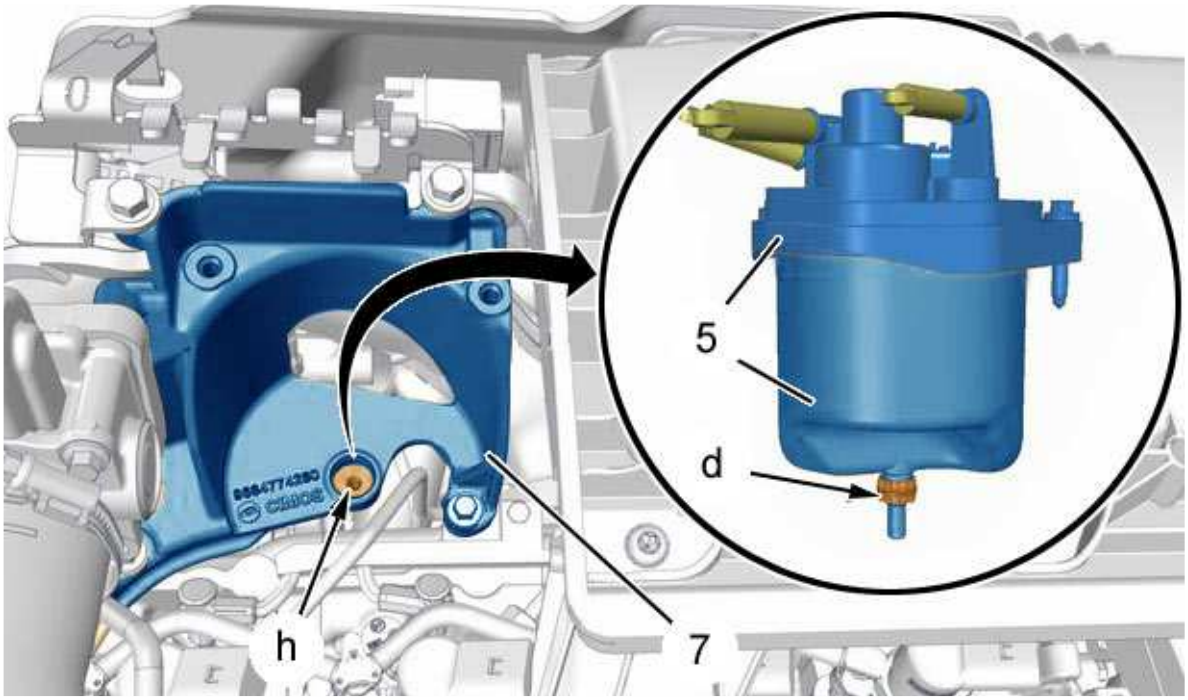

b1hg1o5d

Check that the centring ring is present (at "d").

> **WARNING :** Very carefully, vertically position the fuel filter (5) in the slot "h" in the support (7) of the fuel filter (5) (risk of damage)

Fit the fuel filter assembly (5) onto the support (7) (at "h") (Carefully).

Refit the bolts (4).

Remove the tools [0194-T], [1520-B / 5705-T].

Couple the click-fit unions (1), (3a), (3b).

Connect :

- The connector (at "a")
- The connector (at "b") (according to equipment)

4 - PRIMING AND BLEEDING THE FUEL CIRCUIT

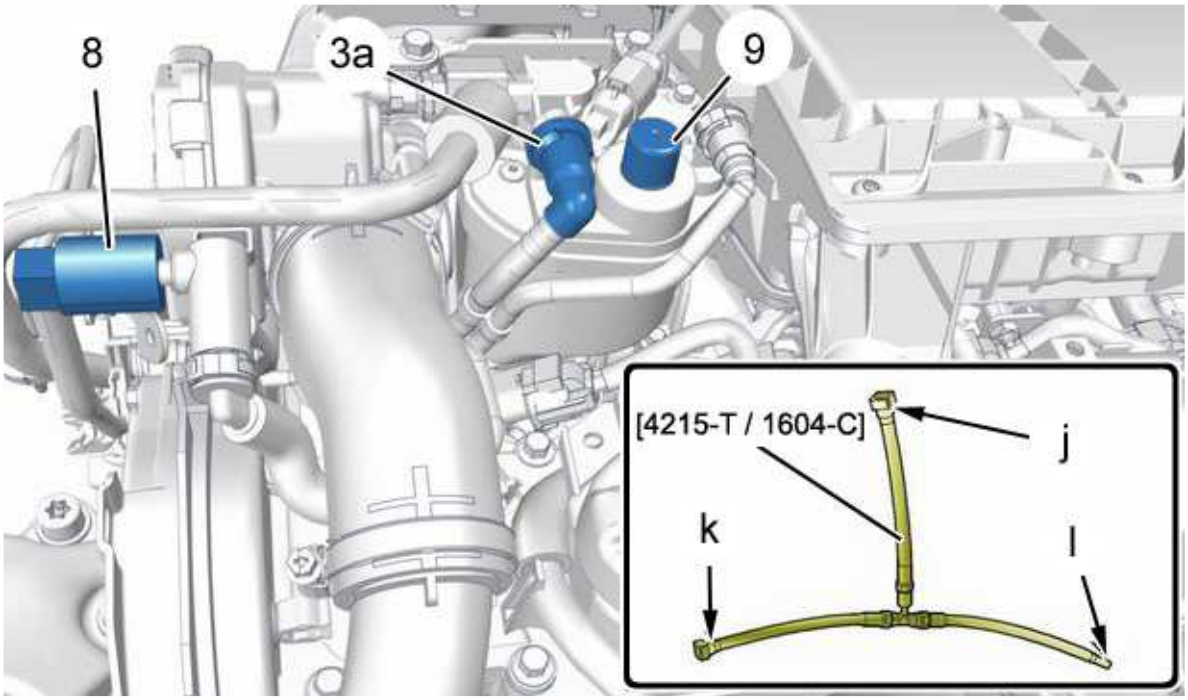

b1hg1w2d

Clean the unions (3a), (8) ; Using the degreasing product, the brush and the cleaning tray.

Connect the male and female unions (Ø 10 mm) of the tool [4215-T / 1604-C] in place of the union (8) (at "k", "l").

Disconnect the fuel return union (3a) and insert the union (Ø 8 mm) of tool [4215-T / 1604-C] in the fuel return circuit (at "j").

Close : The pipe (3a) ; Using tool [1520-B / 5705-T].

Operate the manual priming pump 120 for (9) seconds to prime the fuel circuit.

Remove :

- The tool [4215-T / 1604-C]
- The tool [1520-B / 5705-T] from the union (3a)

Recouple the unions (3a), (8).

Operate the manual priming pump (9) several times to prime the fuel circuit.

5 - CHECKING FOR LEAKS

> **WARNING :** Perform the operations to be carried out following reconnection of the battery

Reconnect the battery.

Start the engine.

Allow the engine to idle for 2 minutes.

Check the absence of leaks.

Refit :

- The engine cover (According to equipment)
- The protective panel under the engine

6 - BLEED DURING SERVICE (PRESENCE OF WATER)

Put the vehicle on a hoist.

Remove :

- The protective panel under the engine
- The engine cover (According to equipment)

Place the tray underneath the fuel bleed pipe outlet (below the engine compartment).

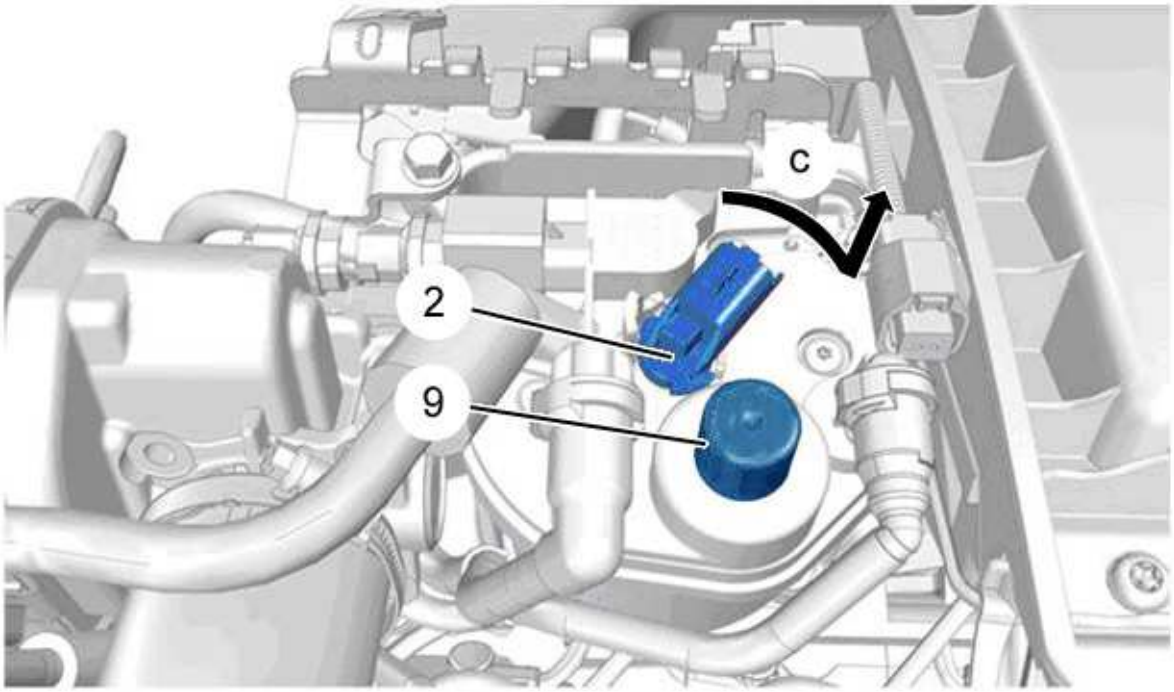

b1hg1o9d

Disconnect and move aside the connector (at "b") (Water in diesel fuel detector) (according to equipment).

Unlock : The water bleed screw (2) (Rotate clockwise) ; Raise the water bleed screw (2) fully (following the arrow "c").

Leave the fuel to flow into the tray.

Push the water bleed screw (2) fully (Low position).

Lock : The water bleed screw (2) (Turn anticlockwise).

Connect the connector at "b" (Water in diesel fuel detector) ;(according to equipment).

Operate the manual priming pump (9) several times to prime the fuel circuit.

Remove the tray from underneath the engine.

Refit :

- The engine cover (according to equipment)
- The protective panel under the engine

REMOVING - REFITTING : PRESSURE SENSOR / INLET AIR TEMPERATURE

ESSENTIAL : Observe the safety and cleanliness recommendations

1 - LOCATION

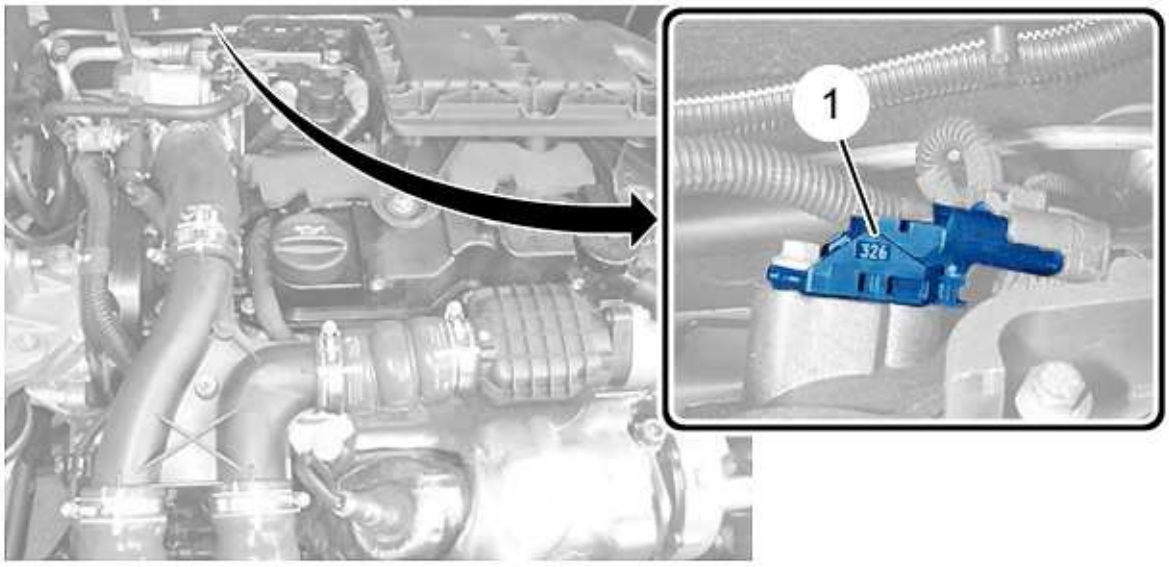

b1hg3tld

(1) Inlet air pressure and temperature sensor.

2 - REMOVING

Disconnect the ancillaries battery.

Remove the engine style cover (according to equipment).

Remove the rear sound deadening screen from the engine and move it aside.

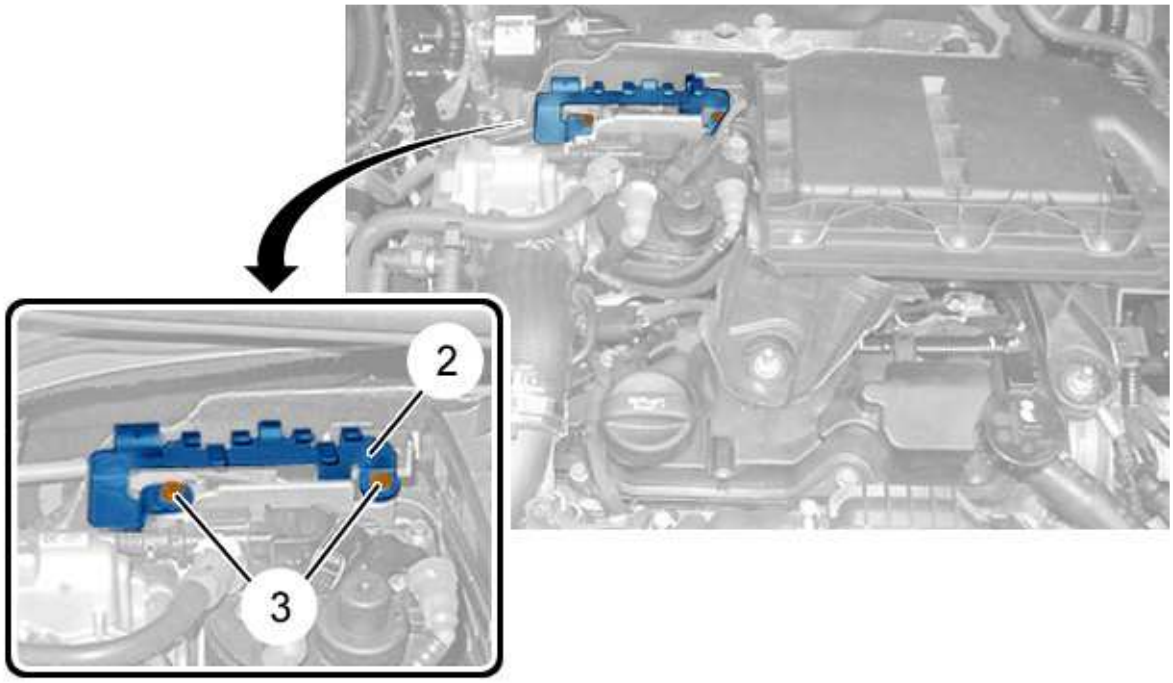

b1hg3tmd

Remove :

- The bolts (3)
- The engine rear acoustic shield support (2)
- The engine rear acoustic shield

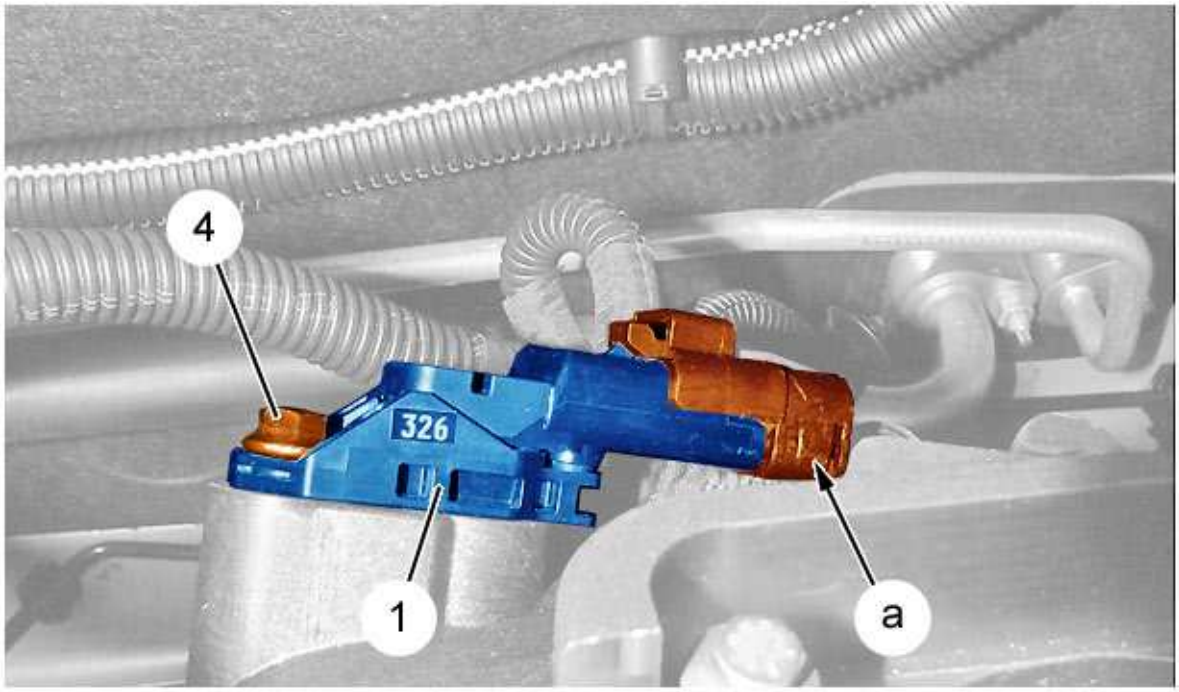

b1hg18od

Disconnect the connector (at "a").

Remove :

- The bolt (4)
- The inlet air pressure/temperature sensor (1)

3 - REFITTING

> **WARNING :** Adhere to the tightening torques

Refit :

- The inlet air pressure/temperature sensor (1)
- The bolt (4)

Connect the connector (at "a").

Refit :

- The engine rear acoustic shield support (2)
- The bolts (3)
- The engine rear acoustic shield
- The engine style cover (according to equipment)

> **WARNING :** Perform the operations that are required following a reconnection of the ancillaries battery

Reconnect the ancillaries battery.

REMOVING - REFITTING : PRE-HEATER PLUGS

ESSENTIAL : Observe the safety and cleanliness recommendations

1 - TOOLING

Equipment : BARDHAL "cold effect" high-performance releasing fluid.

tool	Reference	Designation
[0195-N]  *e5ag06rt*	[0195-N]	8 mm long socket for tightening pre-heat glow plugs
[1603-3]  *e5ab0npt*	[1603-3]	Torque wrench adjustable from 5 to 25 Nm

2 - REMOVING

Disconnect the ancillaries battery.

WARNING : Secure the offset brake fluid reservoir to immobilise it

Move aside the offset brake fluid reservoir (according to equipment).

Remove :

- The engine cover (according to equipment)
- The air filter box
- The fuel filter ; Unclip, move aside and blank the fuel supply pipe
- The upper sound-deadening shield for the fuel injection (according to equipment)

WARNING : Use a mirror to carry out the operations mentioned below (if necessary)

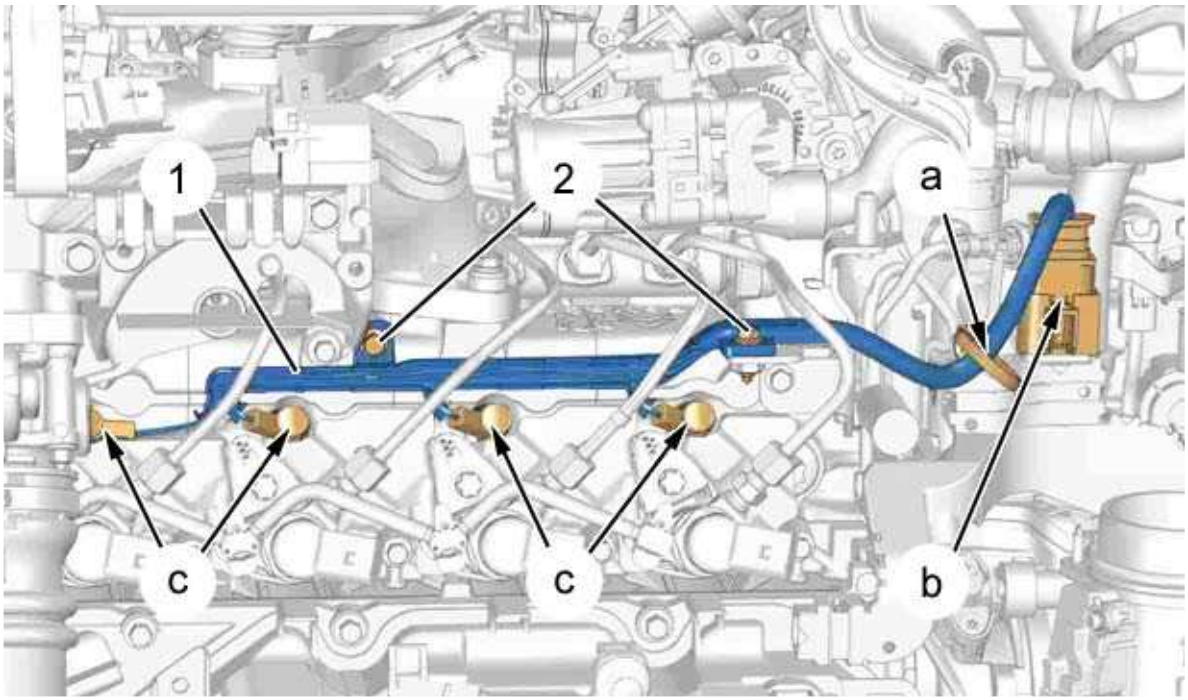

b1hg43ed

Remove the 2 bolts (2).

Unclip clip (at "a").

Disconnect the connector (at "b").

Disconnect the supply bar (1) (at "c").

Remove the supply bar (1).

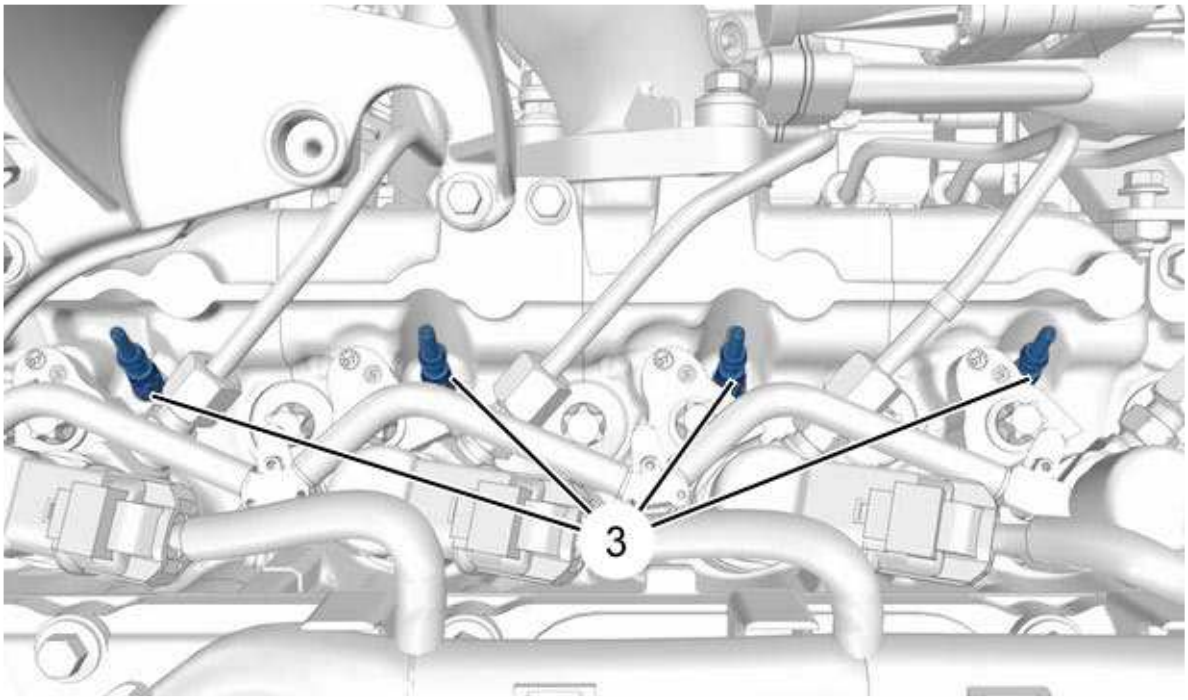

b1hg43fd

> **WARNING :** Apply high performance releasing fluid (if necessary)

Remove the glow plugs (3) ; Using tool [0195-N].

3 - REFITTING

> **WARNING :** Adhere to the tightening torques

> **WARNING :** Apply high temperature anti-seizing paste to the plug threads (copper or ceramic based paste)

Refit the pre-heater plugs (3) ; Using the tools [0195-N], [1603-3].

Refit the supply bar (1).

Reconnect the supply bar (1) (at "c").

Reconnect the connector (at "b").

Clip the clip (at "a").

Refit the 2 bolts (2).

Refit :

- The upper sound-deadening shield for the fuel injection (according to equipment)

- The fuel filter
- The air filter box
- The engine cover (according to equipment)
- The offset brake fluid reservoir (according to equipment)

> **WARNING :** Perform the operations that are required following a reconnection of the ancillaries battery

Reconnect the ancillaries battery.

REMOVING - REFITTING : TURBOCHARGER

ESSENTIAL : Observe the safety and cleanliness recommendations

1 - PARTS WHICH MUST ALWAYS BE REPLACED

Designation	Quantity
Lubrication return pipe seal	1
Turbocharger resonator seal	1
Copper seals	4
Turbocharger seal	1
Turbocharger fixing nuts	4
Catalytic converter clip	2

2 - REMOVING

Put the vehicle on a hoist.

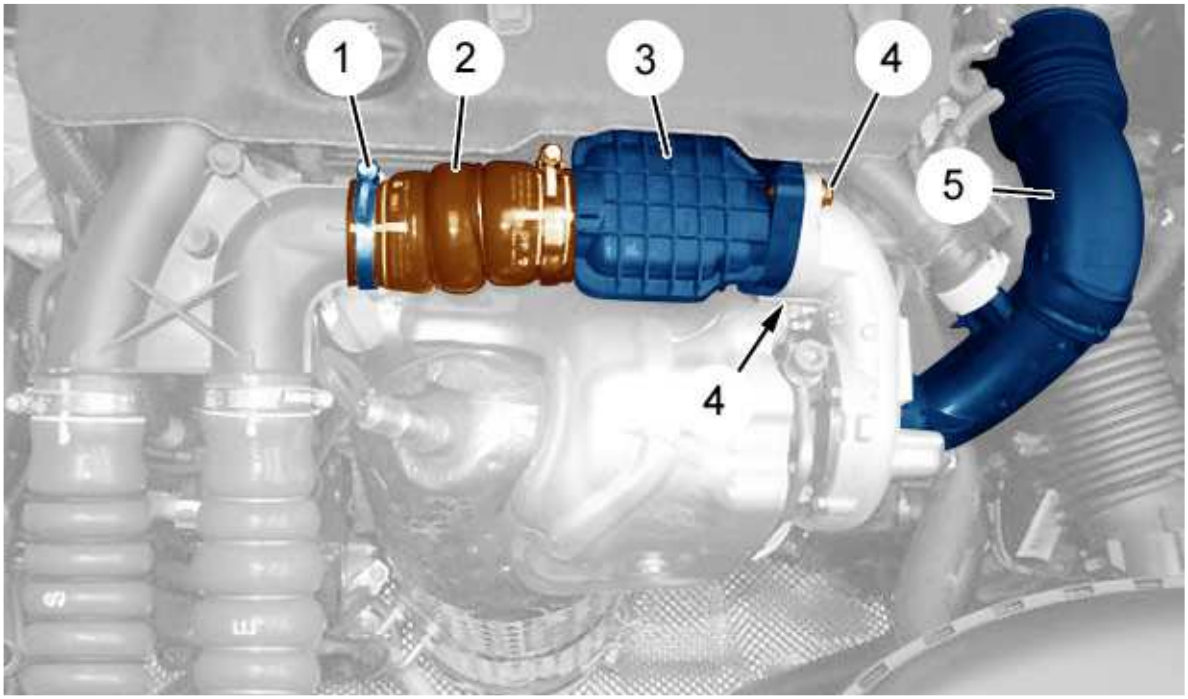

b1hg2dnd

Disconnect the ancillaries battery.

Remove the engine style cover (according to equipment).

WARNING : Protect the engine cooling radiator to avoid damaging the fins

WARNING : Plug the turbocharger inlet and outlet openings

Remove :

- The air inlet sleeve from the turbocompressor (5)
- The bolts (4)
- The clip (1)

Disconnect and release the duct (2).

Remove :

- The turbocharger resonator (3) (Retrieve the seal)
- The particle filter/catalytic converter assembly

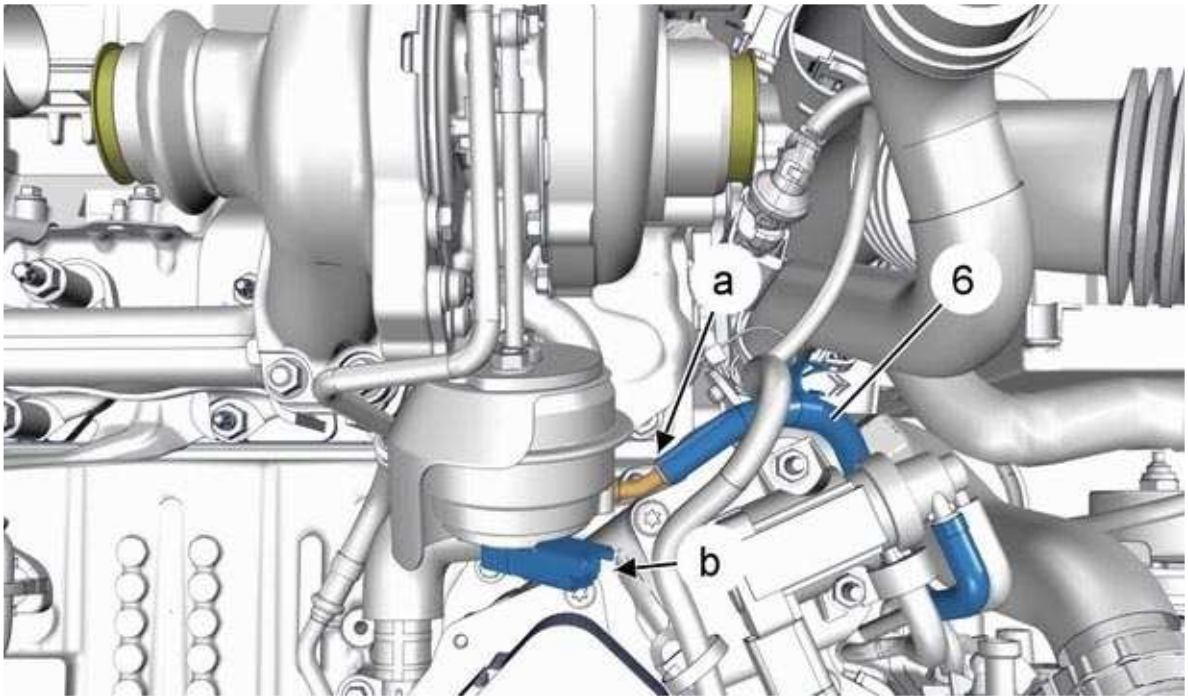

b1hg0xkd

Uncouple the vacuum pipe (6) (at "a").

Disconnect the connector (at "b").

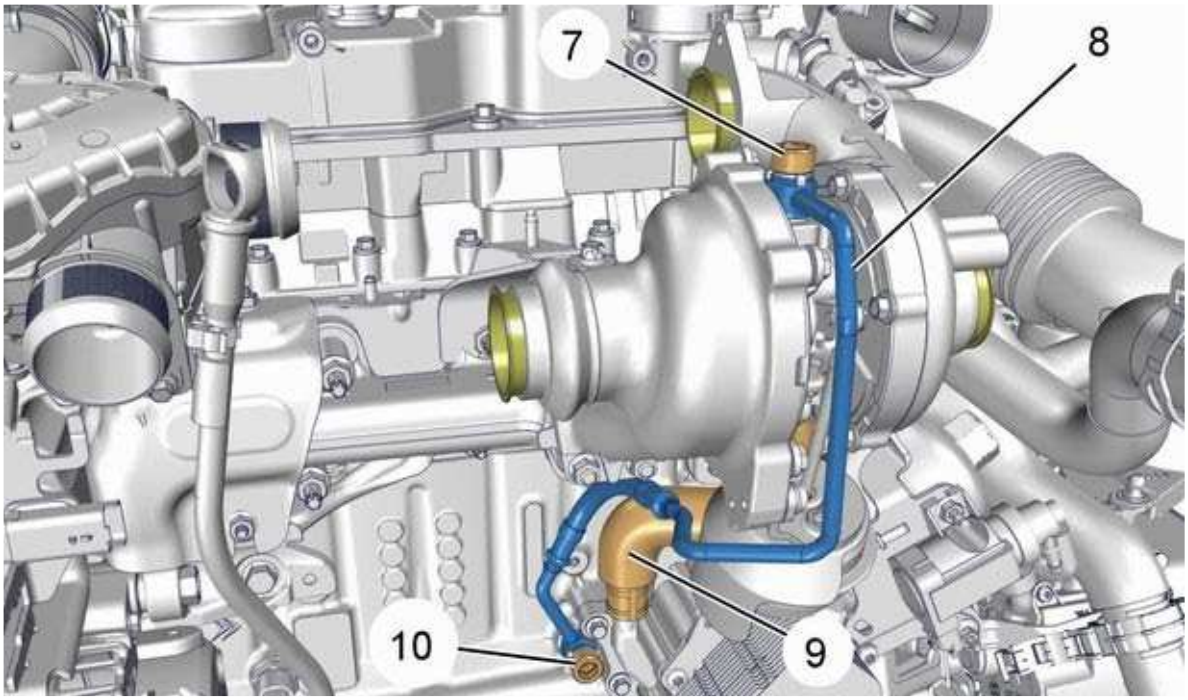

b1hg0xld

WARNING : Keep the filling cylinder full

Uncouple the lubrication return pipe (9).

Remove :

- The turbocharger lubrication inlet pipe (8) banjo bolt (7)
- The copper seals
- The turbocharger lubrication inlet pipe (8) banjo bolt (10)
- The copper seals
- The turbocharger lubrication inlet pipe (8)

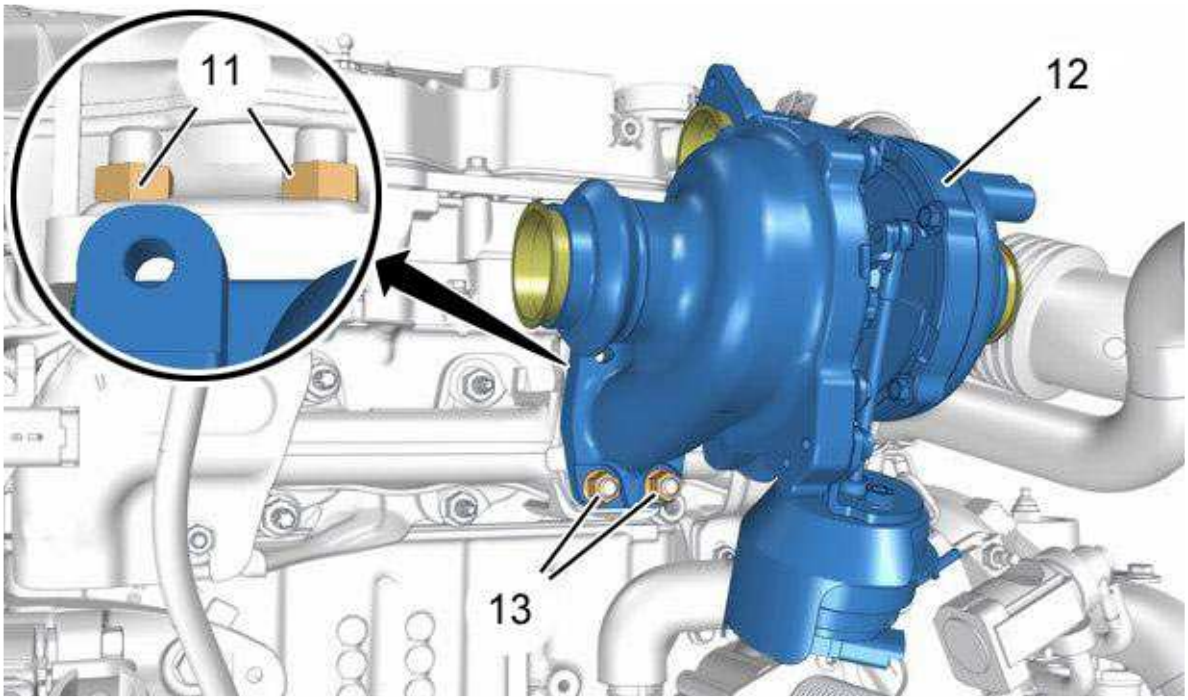

b1hg0xmd

Remove :

- The nuts (11)
- The nuts (13)
- The turbocharger (12) (Retrieve the seal)

> **WARNING :** Plug the exhaust manifold ; Using the closer

3 - CHECK

Examine the engine air filtering system.

Check :

- The air hoses
- The condition and the correct positioning of the turbocharger vacuum pipe (12)

Check the absence of foreign bodies in the following components :

- Induction circuit
- Exhaust gas manifold (Risk of destruction of the turbocharger (12) when operating)

Clean the surface of the turbocharger exhaust manifold .

Check that the oil circuit unions are clean.

> **WARNING :** Use the recommended bolts and nuts (heat resistant)

Replace :

- The turbocharger (12) fixing nuts (11), (13)
- The 4 copper seals of the turbocharger (12) lubrication banjo bolts (7), (10)
- The catalytic converter clips

4 - REFITTING

WARNING : Adhere to the tightening torques

WARNING : On refitting, all removed seals must be replaced with new seals

WARNING : When refitting : Remove the plugs on the turbocharger (12) at the last moment

WARNING : Clean the gasket faces with an approved descaling product. Do not use abrasives or sharp tools on the joint faces. The gasket faces must not have any traces of knocks or scores

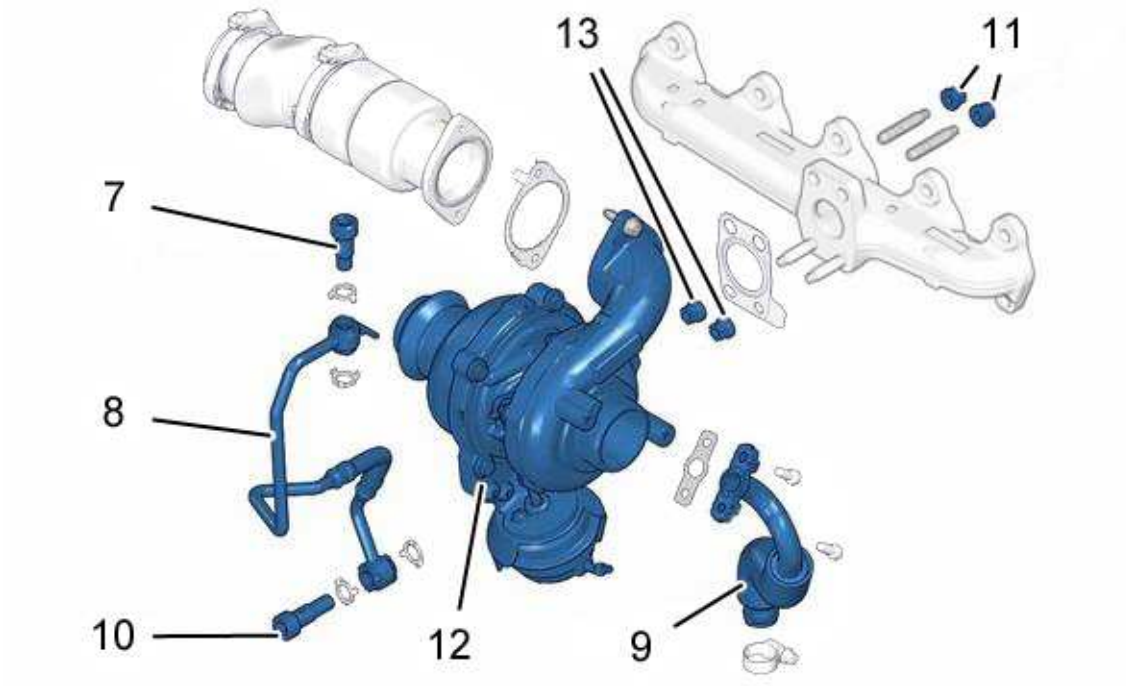

b1hg0xnd

WARNING : Test fit the components of the turbocharger (12), in order to adjust their position (Before final tightening)

WARNING : Systematically replace the nuts (11), (13)

Couple the turbocharger (12) on the exhaust manifold .

Fit the nuts (11), (13) (without tightening).

Put the turbocharger (12) lubrication inlet pipe (8) in place.

Refit :

- The copper seals (new)
- The turbocharger (12) lubrication inlet pipe (8) banjo bolt (7)
- The turbocharger (12) lubrication inlet pipe (8) banjo bolt (10)

Tighten the nuts (11), (13).

WARNING : When refitting, lubricate the end of the lubrication return pipe (9), with engine oil

Couple up :

- The lubrication return pipe (9)
- The vacuum pipe (6) (at "a")

Connect the connector (at "b").

WARNING : Carry out a pre-fitting to adjust the position of the catalytic converter and particle filter assembly

Refit :

- The particle filter/catalytic converter assembly
- The turbocharger resonator (3) (with a new seal)
- The bolts (4)

Connect the duct (2).

Refit :

- The clip (1)
- The air inlet sleeve from the turbocompressor (5)
- The engine cover (according to equipment)

WARNING : Perform the operations that are required following a reconnection of the ancillaries battery

Reconnect the ancillaries battery.

5 - PRECAUTIONS TO BE TAKEN BEFORE STARTING THE VEHICLE

Disconnect the connector of the diesel injectors.

Turn the engine over with the starter motor for 15 seconds.

Reconnect the diesel injector connectors .

Let the engine run at idle for 30 seconds before increasing the load.

After switching on, check the sealing of the various unions.

Clear the faults in the memory ; Using the diagnostic equipment.

REMOVING - REFITTING : FUEL TEMPERATURE SENSOR

ESSENTIAL : Observe the safety and cleanliness recommendations

1 - TOOLING

tool	Reference	Designation
[0194-T]  *e5ab05lt*	[0194-T]	Set of plugs

2 - PARTS WHICH MUST ALWAYS BE REPLACED

Designation	Quantity
Low pressure fuel pipe clip on fuel filter support	1

3 - LOCATION

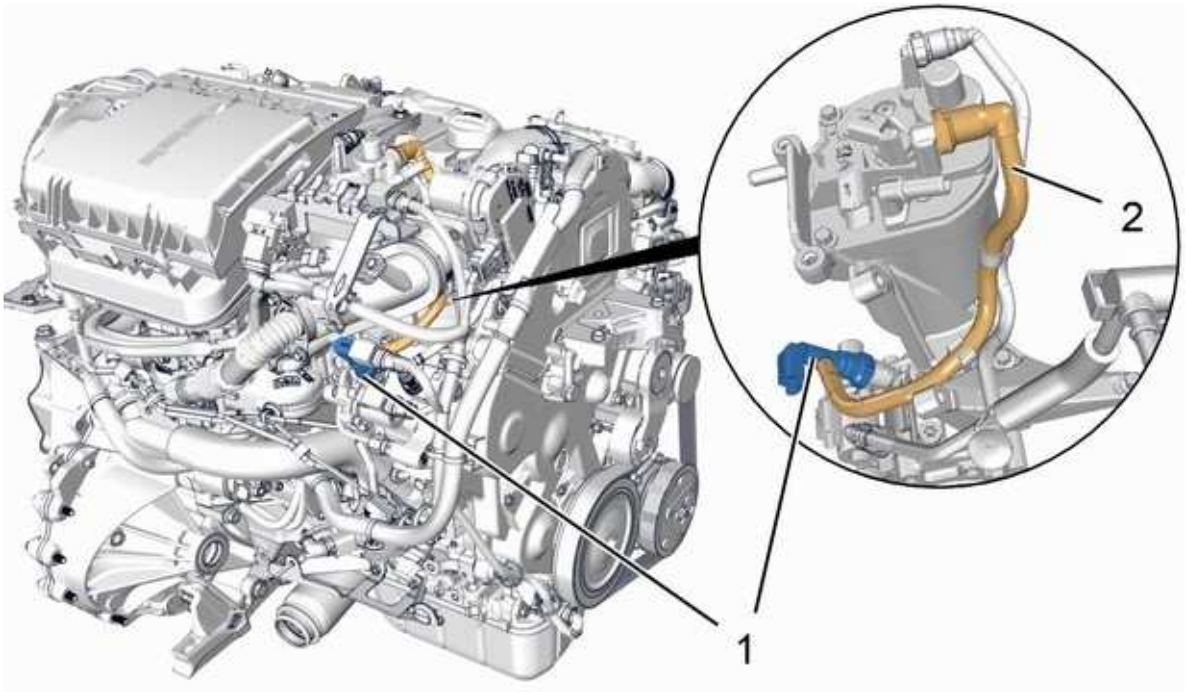

b1cg02ed

(1) Fuel temperature sensor.

(2) Low pressure fuel pipe .

4 - REMOVING

Disconnect the ancillaries battery.

Remove :

- The engine style cover (according to equipment)
- The air filter box
- The air inlet duct
- The inlet air bypass unit (according to equipment)
- The inlet air metering unit

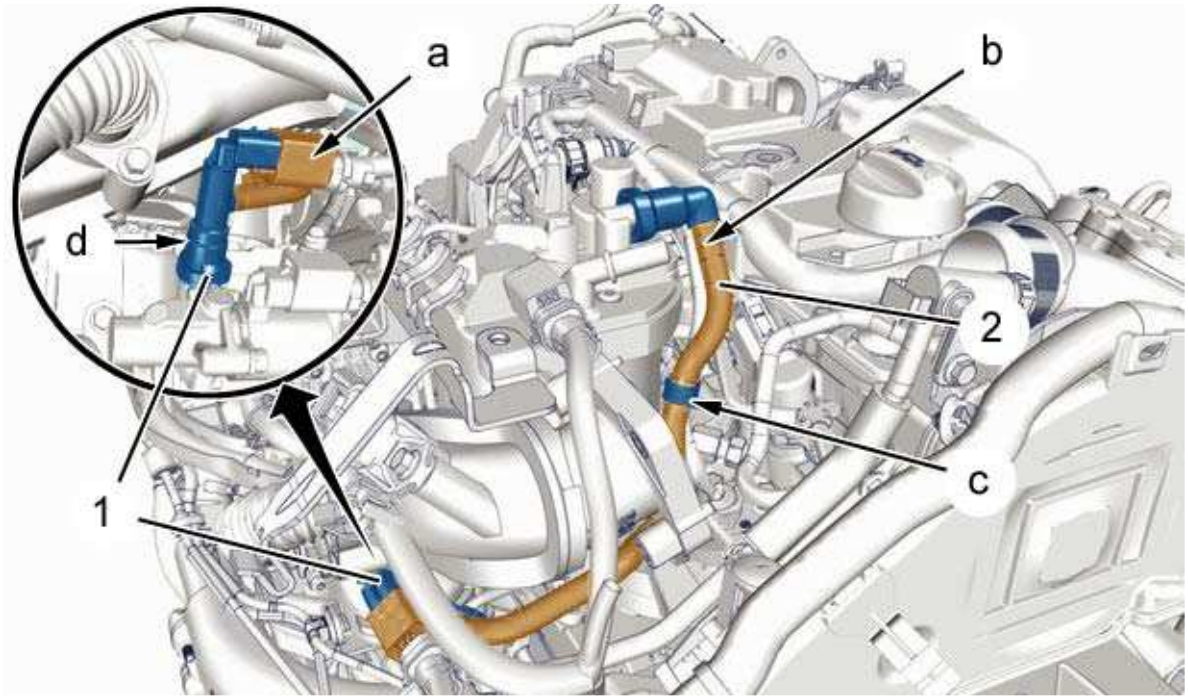

b1hg2cjd

Disconnect and move aside the connector (at "a").

Uncouple and close ; Using the closers [0194-T] :

- The pipe (at "b")
- The pipe (at "d")

Unclip the low pressure fuel pipe (2) (at "c").

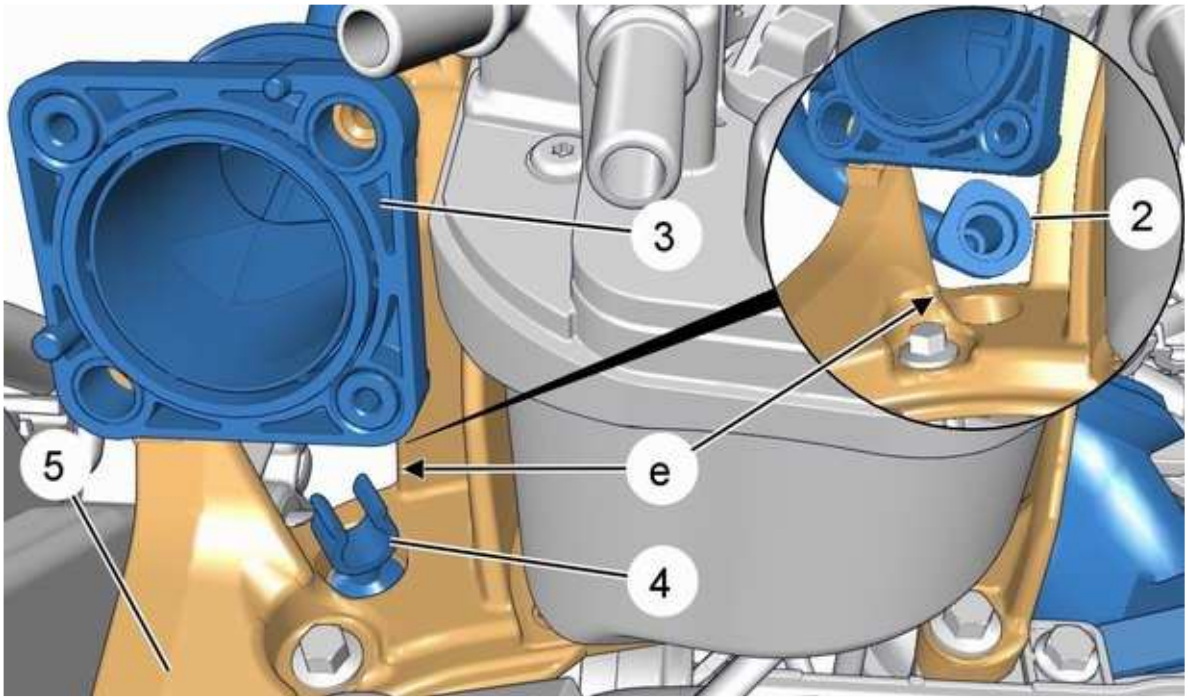

b1hg1mhd

Remove the clip (4) from the mounting (5).

Carefully release the union of the low pressure fuel pipe (2) between the mounting (5) and the air inlet pipe (3) (at "e").

Remove the fuel low pressure pipe (2) and fuel temperature sensor (1) assembly.

5 - REFITTING

Remove the closers [0194-T].

Refit the fuel low pressure pipe (2) and fuel temperature sensor (1) assembly.

Carefully pass the union of the low pressure fuel pipe (2) between the mounting (5) and the air inlet pipe (3) (at "e").

Refit the clip (4) (new).

Couple up :

- The pipe (at "d")
- The pipe (at "b")

Clip the low pressure fuel pipe (2) (at "c") (replace if necessary).

Connect the connector (at "a").

Operate the manual priming pump several times to prime the fuel circuit.

Refit :

- The inlet air metering unit
- The air inlet duct
- The inlet air bypass unit (according to equipment)
- The air filter box
- The engine style cover (according to equipment)

> **WARNING :** Perform the operations that are required following a reconnection of the ancillaries battery

Reconnect the ancillaries battery.

REMOVAL - REFITTING : HIGH PRESSURE FUEL INJECTION COMMON RAIL

ESSENTIAL : Observe the safety and cleanliness instructions

1 - PARTS WHICH MUST ALWAYS BE REPLACED

Description	Quantity
Fuel high pressure pipes	5

2 - TOOLING

Equipment : Approved leak detector.

Tool	Reference	Description
[0194-T]  *e5ab05lt*	[0194-T]	Set of plugs
[1603-ZZ] 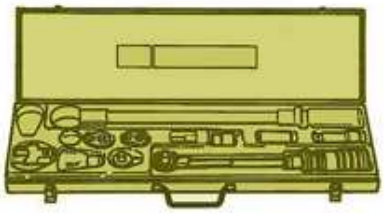 *e5ag06gt*	[1603-ZZ]	Tightening kit

3 - REMOVAL

ESSENTIAL : Observe the safety and cleanliness instructions which are specific to high-pressure diesel injection engines (H.D.I.)

Put the vehicle on a hoist.

Disconnect the ancillaries battery.

Remove the under-engine protection (according to equipment).

Drain the cooling system.

Take down :

- The engine style cover (according to equipment)
- The air cleaner housing
- The inlet air metering unit
- The complete fuel filter with its mounting
- The exhaust gas recycling module
- The air inlet pipe

SPECIAL FEATURE :

FOR : 1PMJ - B0FLT : DIESEL DV6C UE6 85KW

FOR : 1CMJ - B0FLT : DIESEL DV6C UE6 85KW

FOR : 1PA7 - B0FBM : DV6C TURBO DIESEL

FOR : 1PTB - B0FBM : DV6C TURBO DIESEL

FOR : 1PTC - B0FBM : DV6C TURBO DIESEL

FOR : 1PT7 - B0FBM : DV6C TURBO DIESEL

FOR : 1CYA - B0FBM : DV6C TURBO DIESEL

FOR : 1CXA - B0FBM : DV6C TURBO DIESEL

FOR : 1CB9 - B0FBM : DV6C TURBO DIESEL

FOR : 1CWA - B0FBM : DV6C TURBO DIESEL

FOR : 1PB9 - B0FBM : DV6C TURBO DIESEL

FOR : 1CX7 - B0FBM : DV6C TURBO DIESEL

FOR : 1CB7 - B0FBM : DV6C TURBO DIESEL

FOR : 1C58 - B0FBM : DV6C TURBO DIESEL

FOR : 1PW2 - B0FBM : DV6C TURBO DIESEL

FOR : 1CB8 - B0FBM : DV6C TURBO DIESEL

FOR : 1PIA - B0FBM : DV6C TURBO DIESEL

FOR : 1CMJ - B0FBM : DV6C TURBO DIESEL

FOR : 1PMJ - B0FBM : DV6C TURBO DIESEL

FOR : 1CH5 - B0FBM : DV6C TURBO DIESEL

FOR : 1PT9 - B0FBM : DV6C TURBO DIESEL

FOR : 1PI4 - B0FBM : DV6C TURBO DIESEL

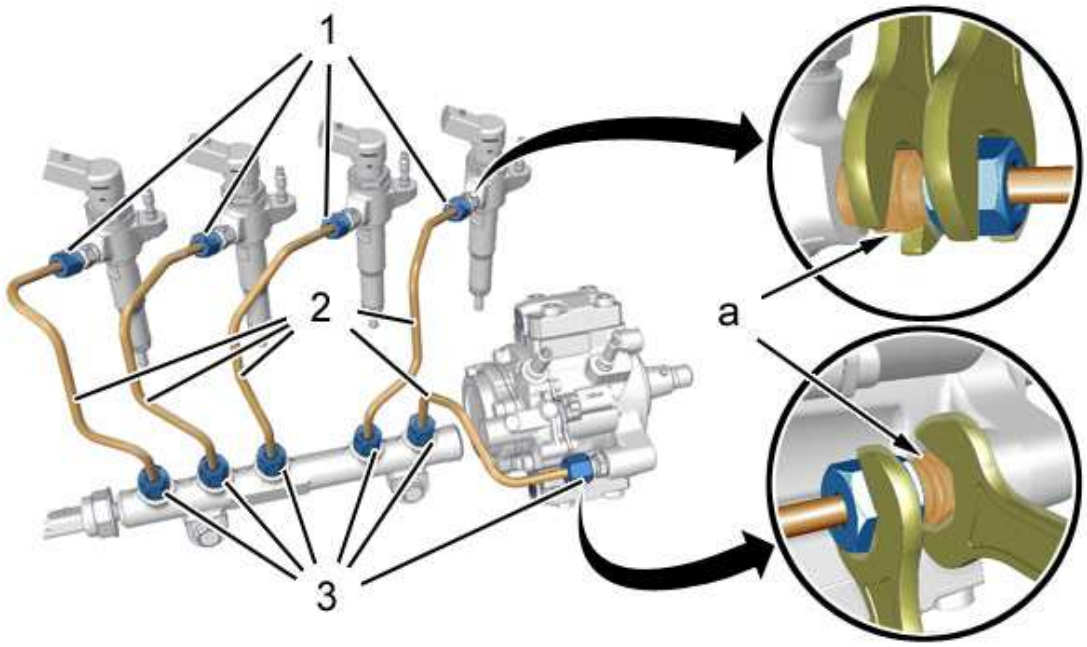

b1hg1mzd

WARNING : Clean the unions (1), (3) of the high pressure fuel pipes (2) prior to slackening (if necessary)

Slacken :

- The high pressure fuel pipe (2) unions (3) ; Apply a counter-torque (at "a")
- The high pressure fuel pipe (2) unions (1) ; Apply a counter-torque (at "a")

WARNING : Blank all of the open high pressure fuel circuit openings ; Using the plugs [0194-T]

Remove the high pressure fuel pipes (2).

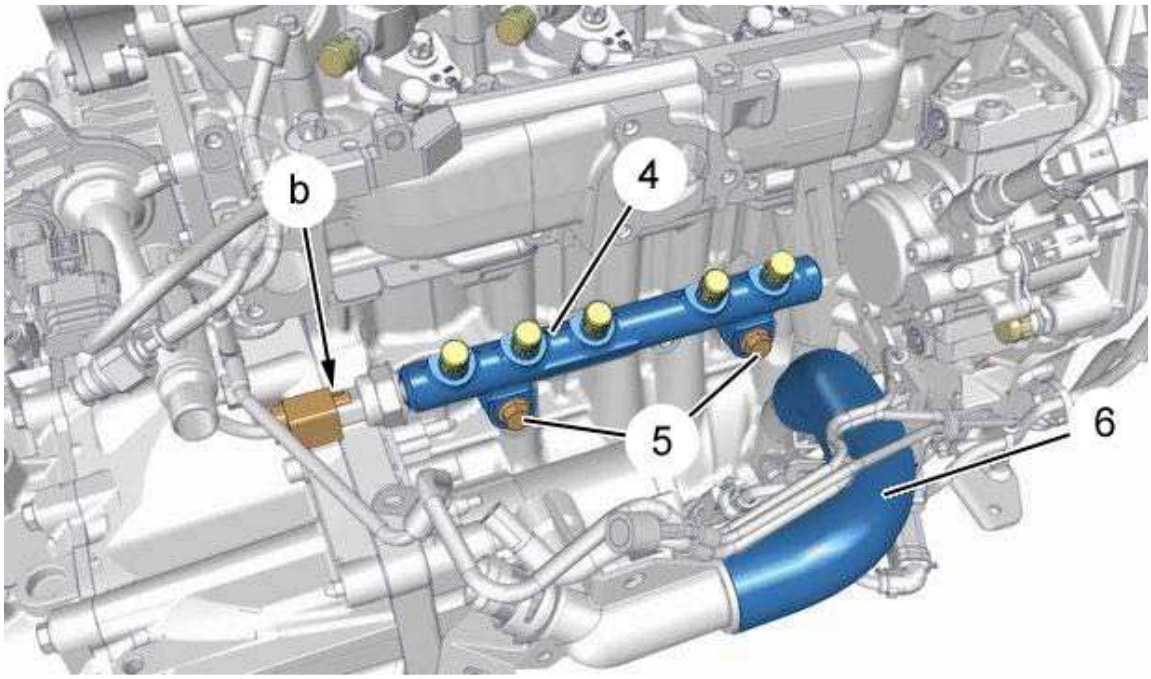

b1hg12ud

Uncouple and move aside the hose (6).

Remove the bolts (5).

Move the fuel high pressure common injection rail (4) aside.

Disconnect the fuel high pressure sensor (at "b").

Remove the fuel high pressure common injection rail (4).

4 - REFITTING

> **ESSENTIAL :** **Observe the safety and cleanliness instructions which are specific to high-pressure diesel injection engines (H.D.I.)**

> **WARNING :** **Observe the tightening torque values**

Present the fuel high pressure common injection rail (4).

Connect the fuel high pressure sensor (at "b").

Fit :

- The fuel high pressure common injection rail (4)
- The screws (5) (without tightening)

NOTE : Refitting the bolts (5) should allow the fuel high pressure common injection rail (4) a vertical freedom of movement for tightening the unions (1), (3) of the high pressure fuel pipes (2)

WARNING : Replace the high pressure fuel pipes (2) that have been removed

Remove the tools[0194-T].

Pre-assemble the following components in order to adjust their position :

- The connectors (3) on the fuel high pressure injection common rail (4)
- The union (1) on the diesel injector
- The union (3) on the high pressure fuel pump

Pre-tighten ; Using the tools [1603-ZZ] :

- The high pressure fuel pipe (2) unions (3) ; Apply a counter-torque (at "a") (according to equipment)
- The high pressure fuel pipe (2) unions (1) ; Apply a counter-torque (at "a")

Tighten ; Using the tools [1603-ZZ] :

- The high pressure fuel pipe (2) unions (1) ; Apply a counter-torque (at "a")
- The high pressure fuel pipe (2) unions (3) ; Apply a counter-torque (at "a") (according to equipment)

Tighten screws (5).

Connect the hose (6).

Fit :

- The air inlet pipe
- The exhaust gas recycling module
- The complete fuel filter with its mounting
- The inlet air metering unit
- The air cleaner housing

Operate the manual priming pump several times to prime the fuel circuit.

Fill and bleed the cooling system.

WARNING : Perform the operations that are required following a reconnection of the ancillaries battery

Reconnect the ancillaries battery.

Refit the engine style cover (according to equipment).

5 - LEAKAGE CHECK

WARNING : Spray the leak detector product on the diesel injector unions (1), (3) and on the fuel high pressure common injection rail (4)

Place the vehicle on a two-post ramp.

Spray the leak detector product on the fuel high pressure unions (1) and (3).

Allow the product to dry.

Start the engine.

Check that there are no fuel leaks.

Accelerate the engine to 3500 r.p.m.

Check that there are no fuel leaks.

Return the vehicle to its wheels.

Carry out a road test.

Check that there are no fuel leaks.

Switch off the engine.

Replace the faulty parts if necessary.

Refit the under-engine protection (according to equipment).

REMOVING - REFITTING : DIESEL INJECTOR

ESSENTIAL : Observe the safety and cleanliness recommendations

1 - REPLACEMENT OF PARTS IN ALL CASES

Designation	Quantity
Seals	4
Centralising rings	4
Support studs	4
Fuel high pressure pipes	4

2 - TOOLING

Equipment :

- Leak detector
- Vacuum extractor
- Round end-piece

tool	Reference	Designation
[0194-T]  *e5ab05lt*	[0194-T]	Set of plugs
[1603-ZZ] 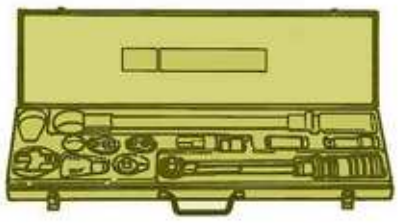 *e5ag06gt*	[1603-ZZ]	Tightening kit

[1603-3]  *e5ab0pgt*	[1603-3]	Torque wrench adjustable from 5 to 25 Nm
[0194-2C]  *e5ab109t*	[0194-2C]	Sealing washer extractor kit
[0194-2D]  *e5ab0zit*	[0194-2D]	Diesel injector well cleaning tool

3 - REMOVING

ESSENTIAL : Observe the safety and cleanliness instructions which are specific to high-pressure diesel injection engines (H.D.I.)

Disconnect the ancillaries battery.

Remove :

- The engine cover (according to equipment)
- The air filter housing
- The upper sound-deadening shield for the fuel injection

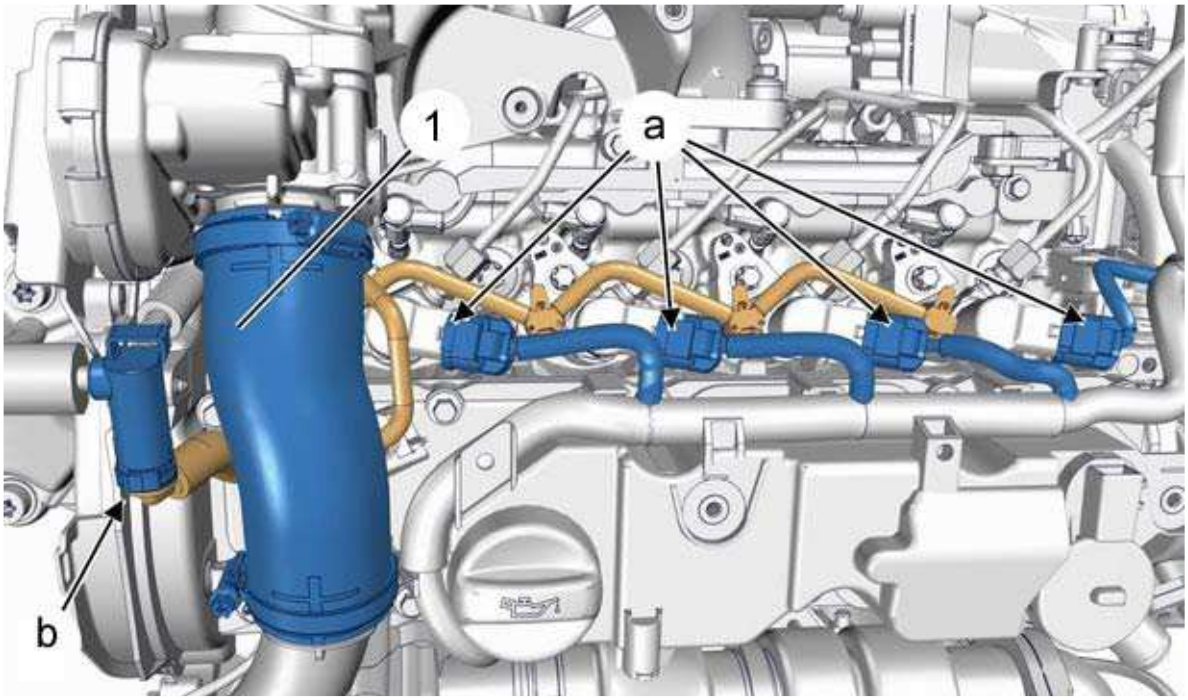

b1hg1ovd

Remove :

- The air duct (1)
- The exhaust gas recycling module
- The air inlet pipe

Disconnect the connector of the diesel injectors (at "a").

Uncouple and close the union "b" (Injectors fuel return pipe) ; Using the tools [0194-T].

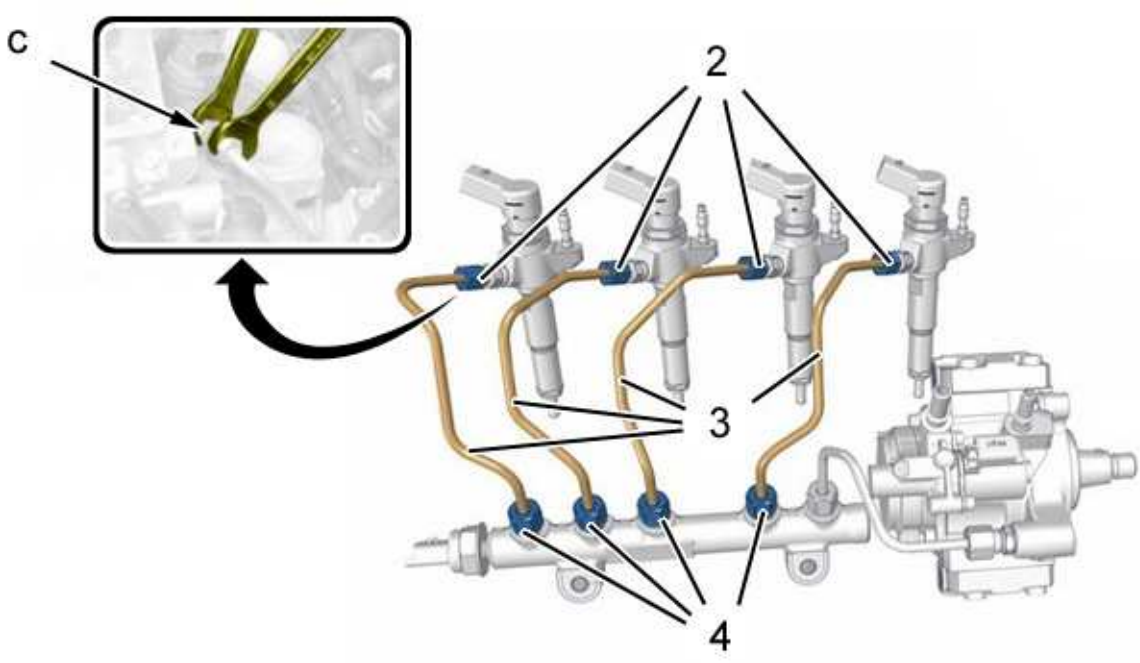

b1hg0zxd

WARNING : Clean the fuel high pressure unions before untightening (If necessary)

Unscrew :

- The high pressure fuel pipe (3) unions (4)
- The high pressure fuel pipe (3) unions (2) ; Apply a counter-torque (at "c")

Remove the high pressure fuel pipes (3).

WARNING : Blank all the apertures of the fuel high pressure circuit ; Using the plugs [0194-T]

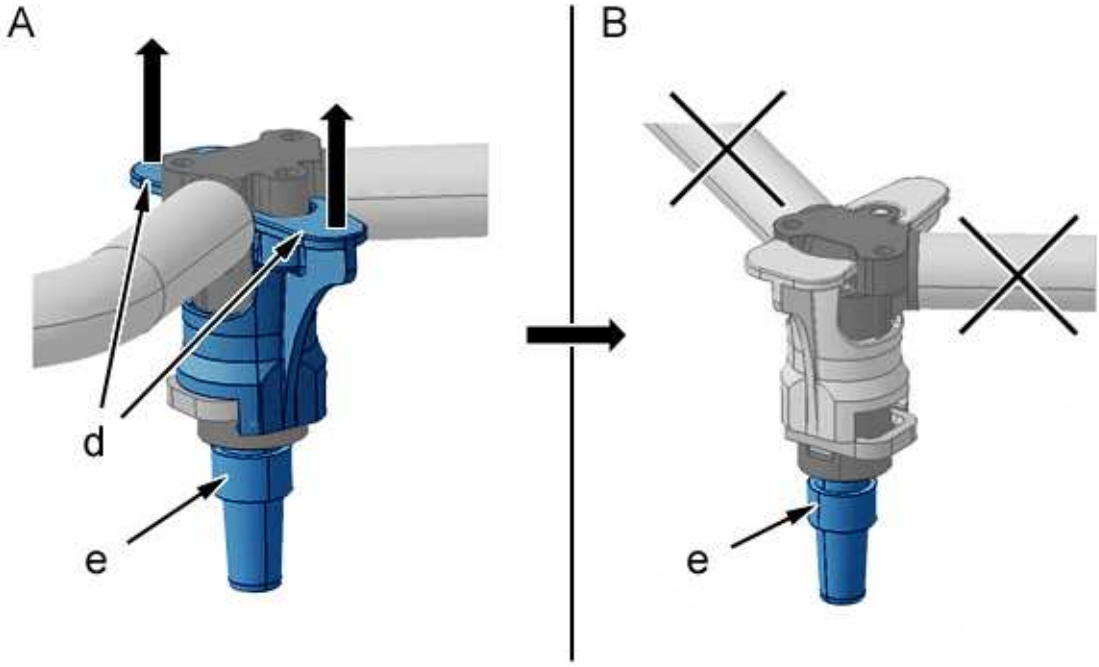

b1hg1ggd

Unclip the click-to-fit unions "e" from the fuel return pipe on the diesel injectors :

- "A" - Locked position
- "B" - Unlocked position

WARNING : To avoid any risk of breaking the click-fit unions, do not pull on the pipes

Release at "d" by pushing the clip up as far as the fuel return pipe union stop.

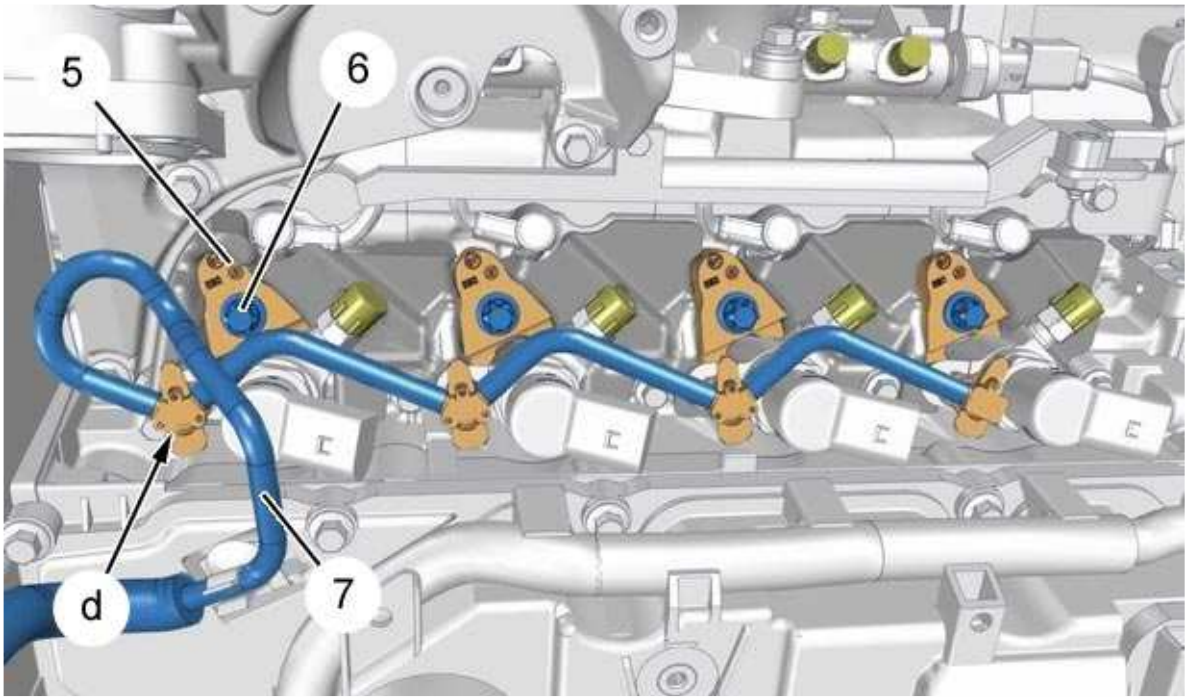

b1hg0zyd

WARNING : Mark the positioning of each diesel injector in relation to the cylinder

Unclip at "d" (Injector by injector).

Remove the fuel return pipes (7) (Injector by injector).

Remove (injector by injector) :

- The (6) bolt
- The diesel injector flange (5)

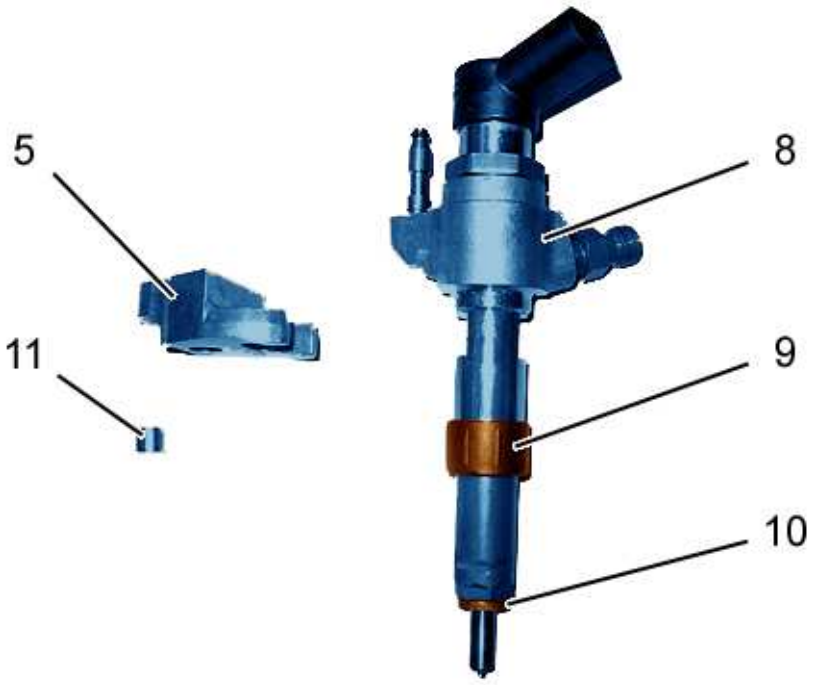

b1hg0zzd

WARNING : Plug the diesel injector wells, as well as the injector nozzle ; Using the plugs [0194-T]

Remove (Injector by injector) :

- The diesel injector (8)
- Seal (10)
- The centralising ring (9)
- The lower sound-deadening shield for the fuel injection
- The thrust button (11)

3 - 1 - Extracting the sealing washer (if necessary)

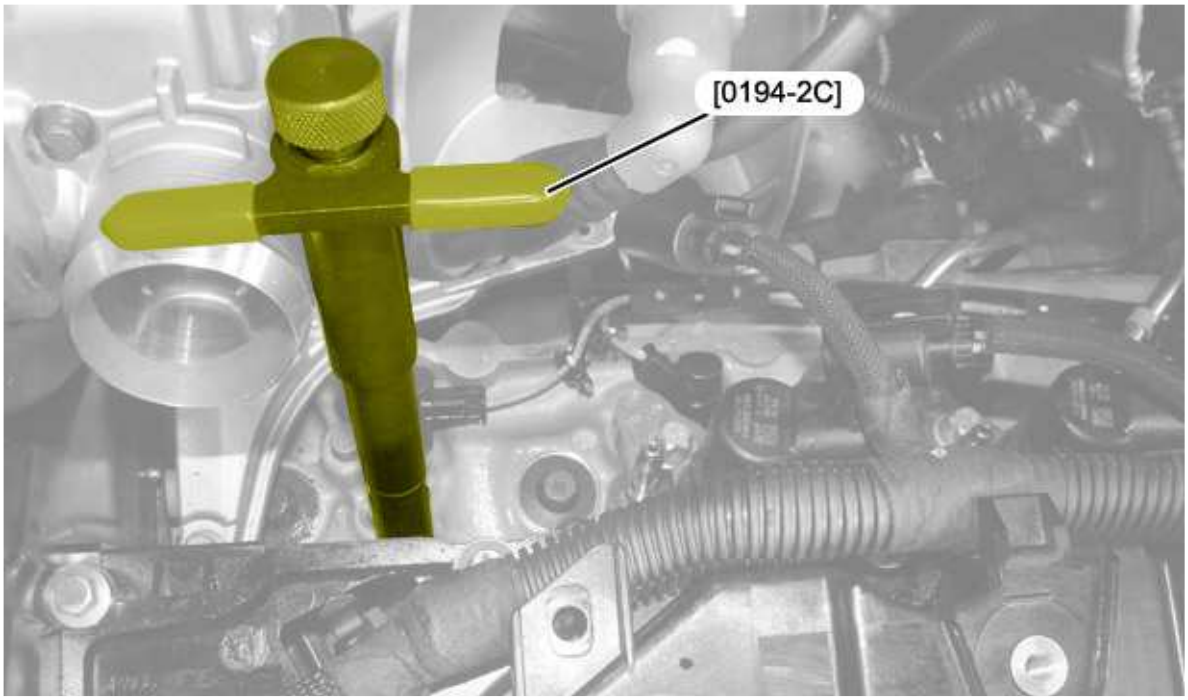

b1hg100d

Slacken the tool [0194-2C] by a few turns.

Fit the tool [0194-2C] on the sealing washer in the diesel injector hole.

Fully tighten the screw of the tool [0194-2C] to lock the sealing washer .

Remove the sealing washer by manoeuvring the tool [0194-2C].

3 - 2 - Cleaning the diesel injector hole

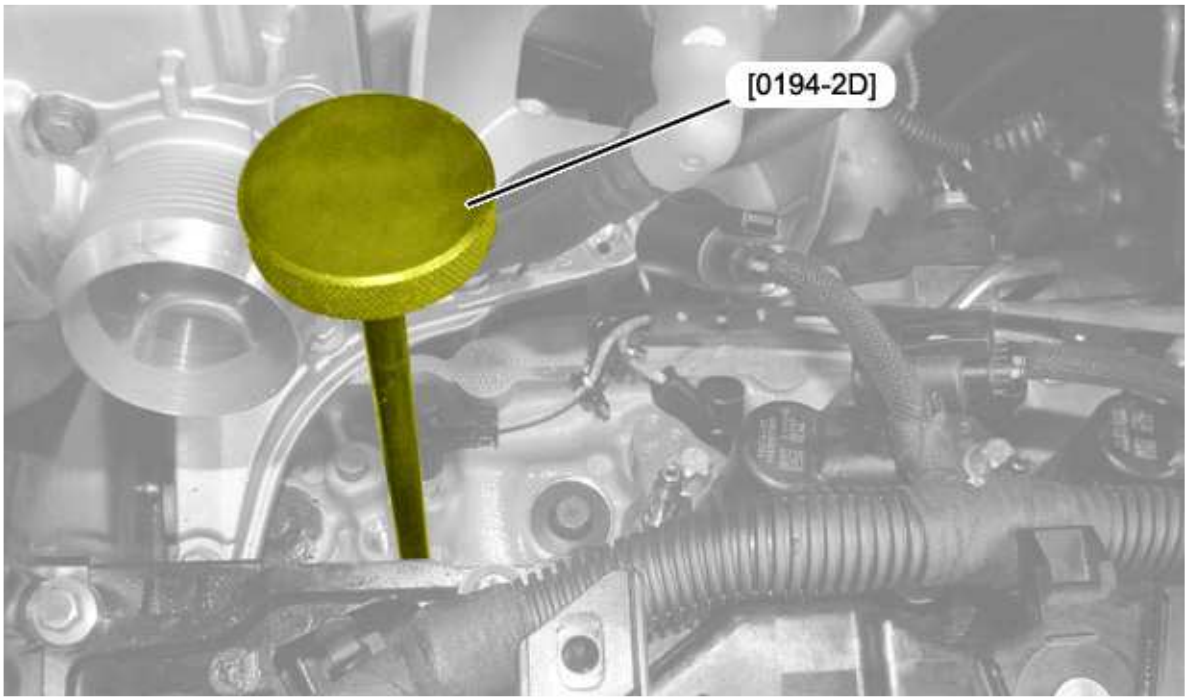

b1hg101d

WARNING : Do not force the movement of the tool [0194-2D], risk of damaging the diesel injector hole

Fit the tool [0194-2D] in the diesel injector well .

Clean the diesel injector hole by turning the tool [0194-2D] clockwise.

Remove the tool [0194-2D].

Vacuum clean inside the diesel injector hole ; Using the vacuum cleaner and the round end piece.

WARNING : Plug the diesel injector wells

4 - REFITTING

ESSENTIAL : Observe the safety and cleanliness instructions which are specific to high-pressure diesel injection engines (H.D.I.)

WARNING : Adhere to the tightening torques

4 - 1 - Diesel injectors re-used

WARNING : Refit the diesel injectors (8) in the cylinders observing their locations in relation to the cylinders , noted on removal

4 - 2 - New diesel injectors

WARNING : Note the classification number of the diesel injectors (6 characters). Note which cylinder(s) receive a new diesel injector

Pair the diesel injectors with the cylinders according to the injector code ; Using the diagnostic equipment.

4 - 3 - Common operations

WARNING : For each diesel injector (8), always replace : The seals (10), The thrust button (11), The high pressure fuel pipes (3), The centralising ring (9)

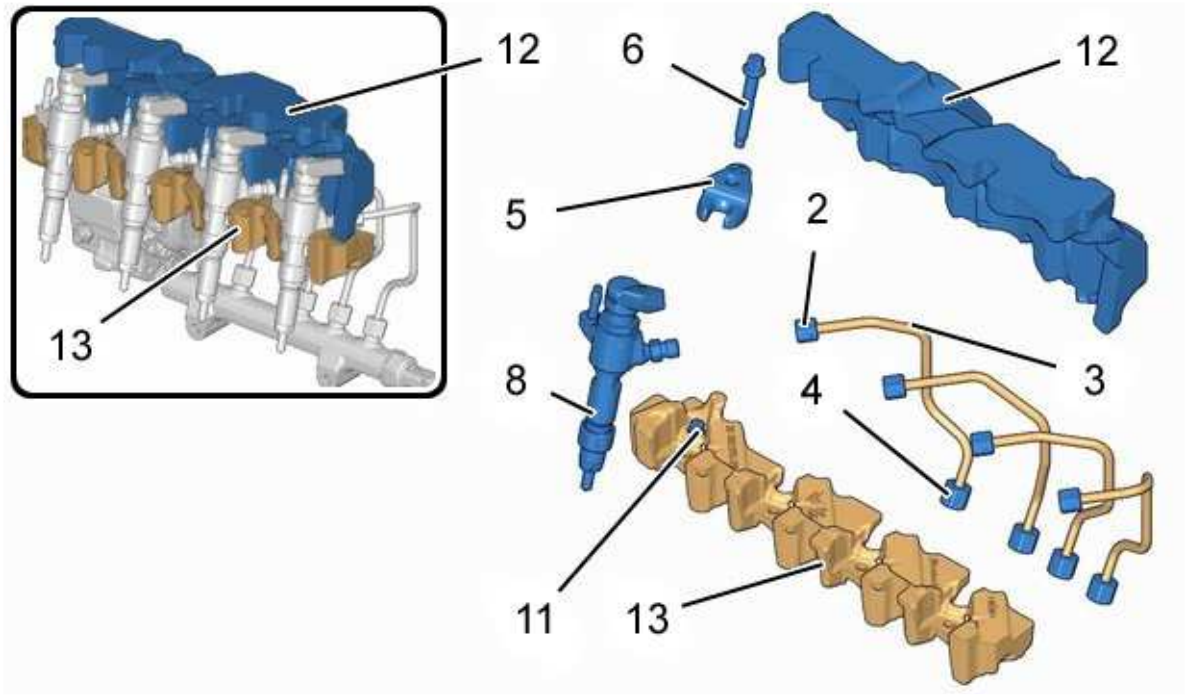

b1hg102d

Refit the lower sound-deadening shield (13) in its position.

Do a trial fitting on the diesel injector (8), in order to adjust the positions of the following components :

- The centralising ring (9) (new)
- Seal (10) (new)
- The diesel injector (8)
- The diesel injector flange (5)

NOTE : Remove the plugs [0194-T] from the diesel injector holes as the diesel injectors are fitted

Refit observing the original locations (Injector by injector) :

- The thrust button (11) (new)
- The assembly of the following components : The diesel injector (8), Seal (10), The centralising ring (9), The diesel injector flange (5)
- The bolt (6)

WARNING : Always replace the high pressure fuel pipes (3)

Pre-assemble the following components in order to adjust their position :

- Fuel unions on the high pressure direct injection rail (4)
- Union (2) on diesel injector (8)

WARNING : Apply a counter-torque (at "c")

Tighten the unions (2) on to the diesel injectors (8) ; Using the tools [1603-ZZ].

Tighten the unions (4) on the fuel high pressure common injection rail ; Using the tools [1603-ZZ].

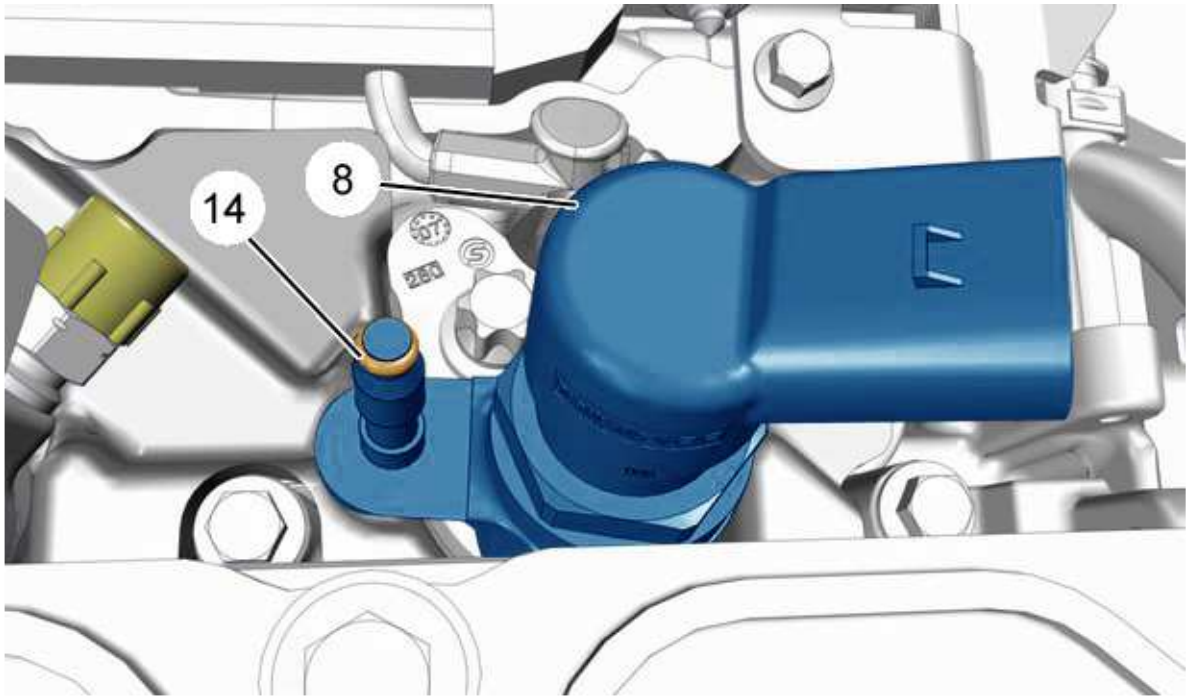

b1hg1oxd

NOTE : Lubricate the seals (14) on the injectors (8) ; With engine oil

WARNING : Always replace the fuel return pipes equipped with a label

Remove the tools [0194-T].

Refit the fuel return pipes (7).

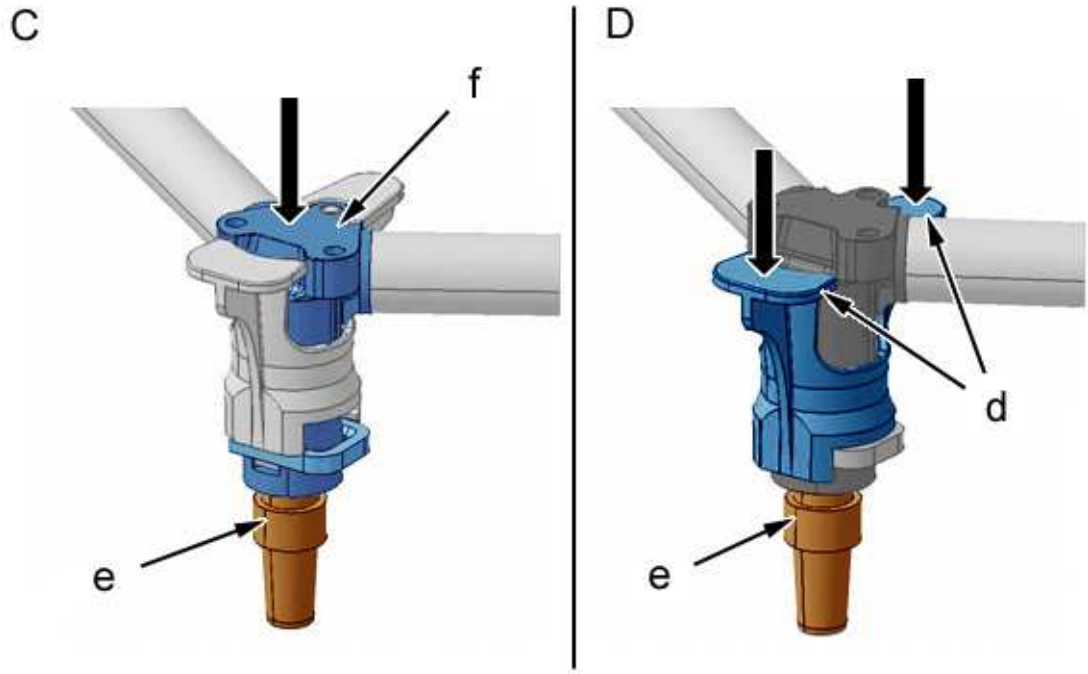

b1hg1gkd

"C" - Push zone.

"D" - Locking.

Push at "f" to engage the injector return pipe union.

Press at "d" until the stop to lock the snap-on union "e" of the fuel return pipe (7).

Connect the connectors of the diesel injectors (8) (at "a").

Connect the union (at "b").

Refit :

- The air inlet pipe
- The exhaust gas recycling module
- The air duct (1)
- The upper sound-deadening shield (12) in its place
- The air filter housing
- The engine cover (according to equipment)

Operate the manual priming pump several times to prime the fuel circuit.

> **WARNING :** Perform the operations that are required following a reconnection of the ancillaries battery

Reconnect the ancillaries battery.

5 - CHECKING FOR LEAKS

WARNING : Spray the leak detector product on the diesel injector unions and on the fuel high pressure common injection rail

Place the vehicle on a two-post ramp.

Spray the leak detector product on the high pressure fuel unions.

Allow the product to dry.

Start the engine.

Check that there are no fuel leaks.

Accelerate the engine to 3500 r.p.m.

Check that there are no fuel leaks.

5 - 1 - New diesel injectors

Carry out a road test : Programming of the diesel injectors ; Using the diagnostic equipment.

5 - 2 - Diesel injectors re-used

Carry out a road test.

5 - 3 - Common operations

Check that there are no fuel leaks.

Replace any defective parts (If necessary).

REMOVING - REFITTING : HIGH PRESSURE FUEL PUMP(CONTINENTAL - SIEMENS)

ESSENTIAL : Observe the safety and cleanliness recommendations

1 - PARTS WHICH MUST ALWAYS BE REPLACED

Designation	Quantity
High pressure fuel supply pipe	1

2 - TOOLING

Equipment : Approved leak detector.

tool	Reference	Designation
[0194-X]  *e5ab0apt*	[0194-X]	High-pressure pump pinion extractor
[0194-J] 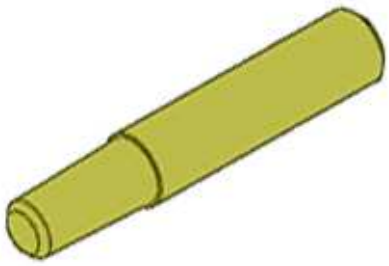 *e5ab0ajt*	[0194-J]	High-pressure pump pinion rotation stop
[0194-A] 	[0194-A]	High pressure pump lock pin

e5ab08qt		
[0194-T]  *e5ab05lt*	[0194-T]	The plugs kit

3 - REMOVING

> **ESSENTIAL :** **Observe the safety and cleanliness instructions which are specific to high-pressure diesel injection engines (H.D.I.)**

Place the vehicle on a two-post ramp.

Disconnect the ancillaries battery.

Remove :

- The engine style cover (according to equipment)
- The air filter housing
- The fuel filter complete
- The air inlet pipe
- The fuel filter support
- The exhaust gas recycling module
- The timing belt

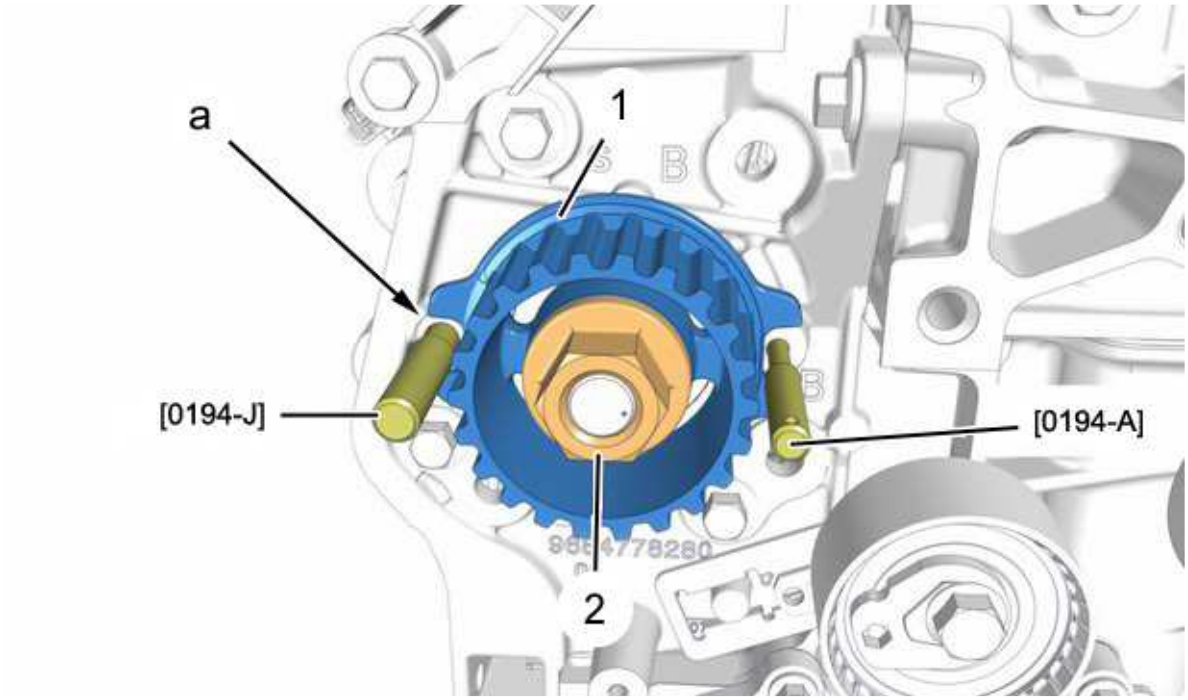

b1hg146d

Remove the tool [0194-A].

Immobilise the high pressure fuel pump pulley (1); Using tool [0194-J] (at "a").

Remove the nut (2).

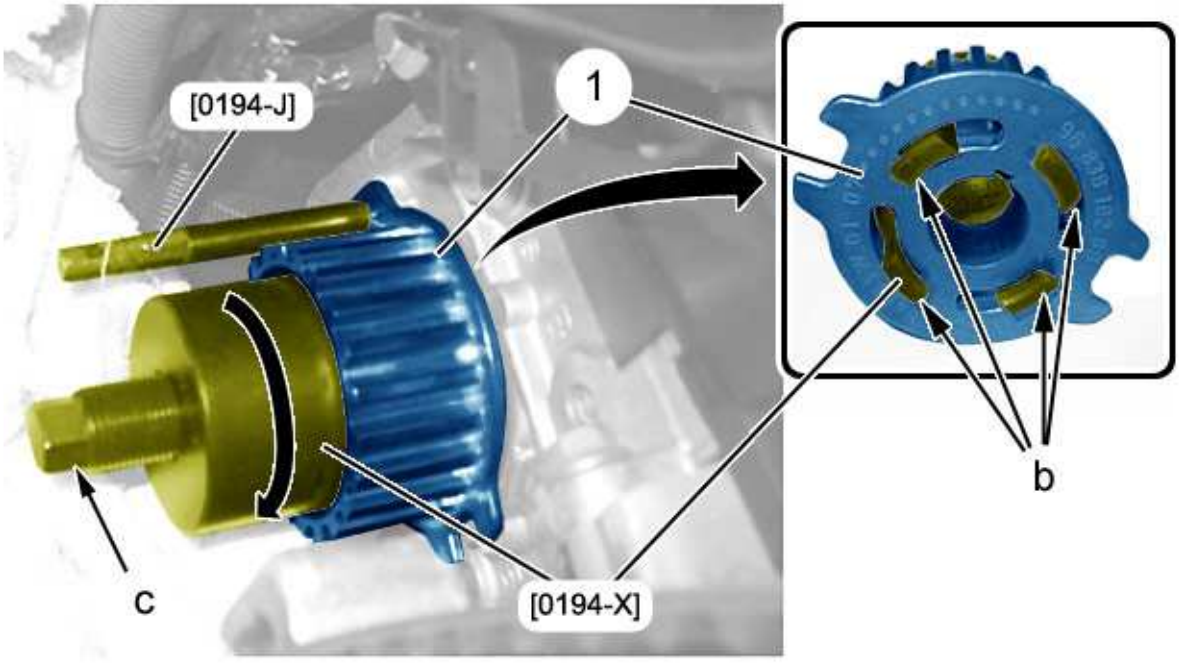

b1hg147d

Position the tool [0194-X] in the grooves of the fuel high pressure pump pulley (1) (at "b").

Manoeuvre the tool [0194-X] by hand clockwise until it is in place.

Tighten the bolt "c" of the tool [0194-X] to extract the pulley (1) from the shaft of the high pressure fuel pump.

Remove the tools [0194-X], [0194-J].

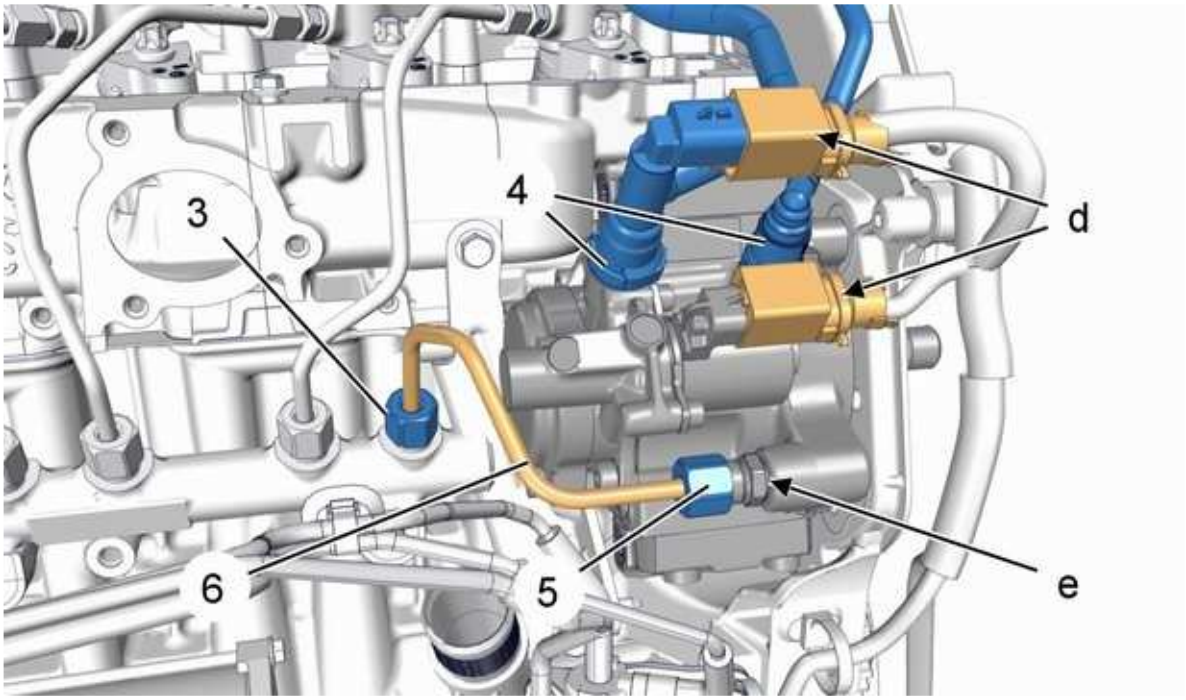

b1hg148d

> **WARNING :** Before uncoupling, clean all the unions on the low pressure circuit

> **WARNING :** Plug the rail entry and pump exit openings using the plugs

Uncouple and move aside the pipes (4).

Disconnect the connectors (at "d").

> **WARNING :** Clean the unions (3) et (5) of the fuel high pressure supply pipe (6) before slackening them

> **WARNING :** Blank all the apertures of the fuel high pressure circuit ; Using the plugs [0194-T]

Unscrew :

- The union (3) of the fuel high pressure supply pipe (6)
- The union (5) of the fuel high pressure supply pipe (6) ; Apply a counter-torque (at "e")

Remove the fuel high pressure supply pipe (6).

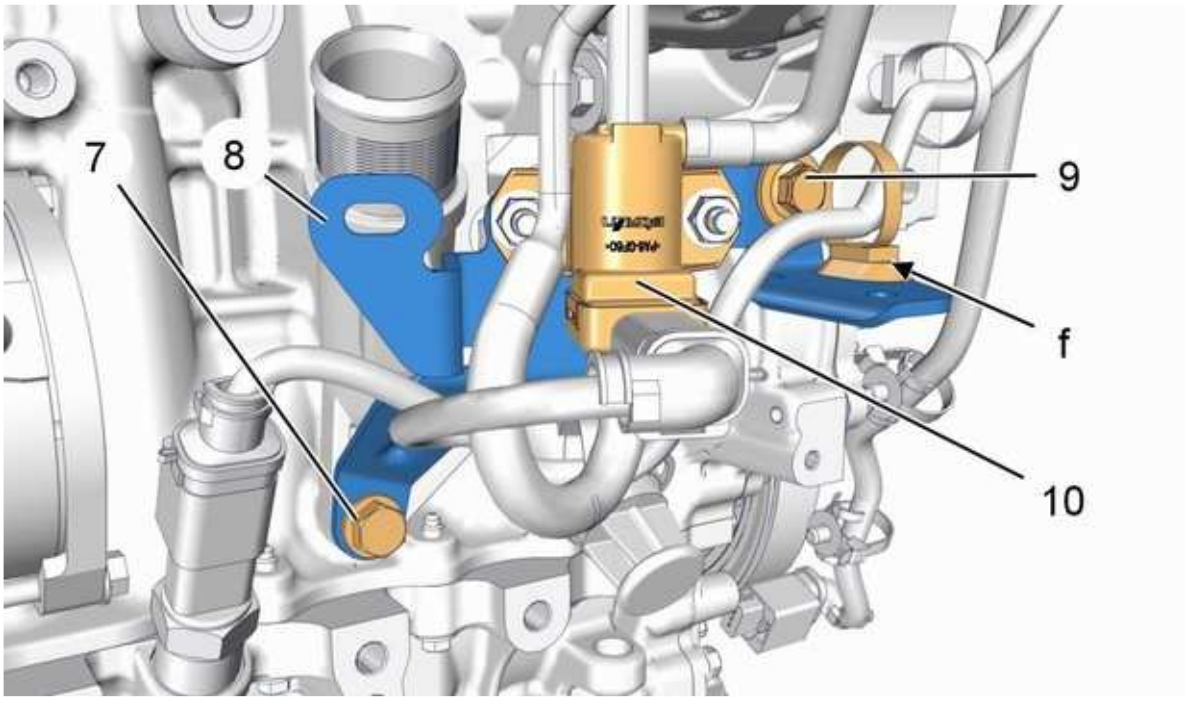

b1hg149d

Release and move aside the electrical harness (at "f").

Remove the bolts (7), (9).

Move aside the support (8) of the EGR by-pass butterfly control solenoid valve (10).

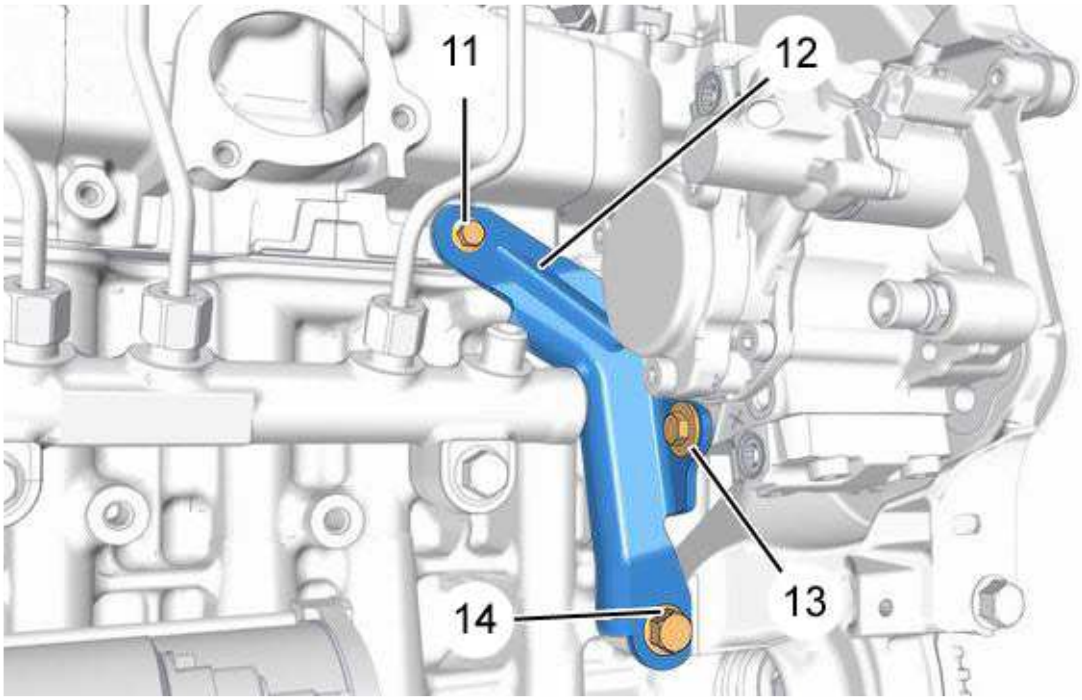

b1hg14ad

Remove :

- The bolts (14), (13), (11)
- The rear mounting (12) of the high pressure fuel pump

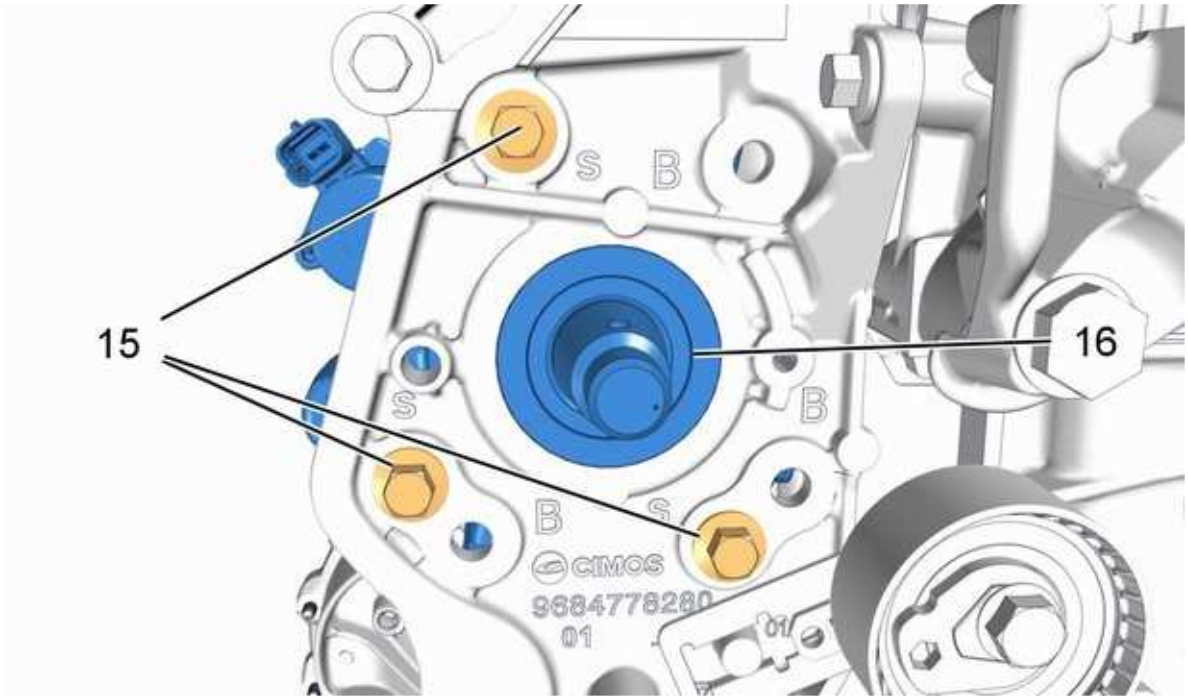

b1hg14bd

Remove :

- The bolts (15)
- The fuel high pressure pump (16)

4 - REFITTING

ESSENTIAL : Observe the safety and cleanliness instructions which are specific to high-pressure diesel injection engines (H.D.I.)

WARNING : Adhere to the tightening torques

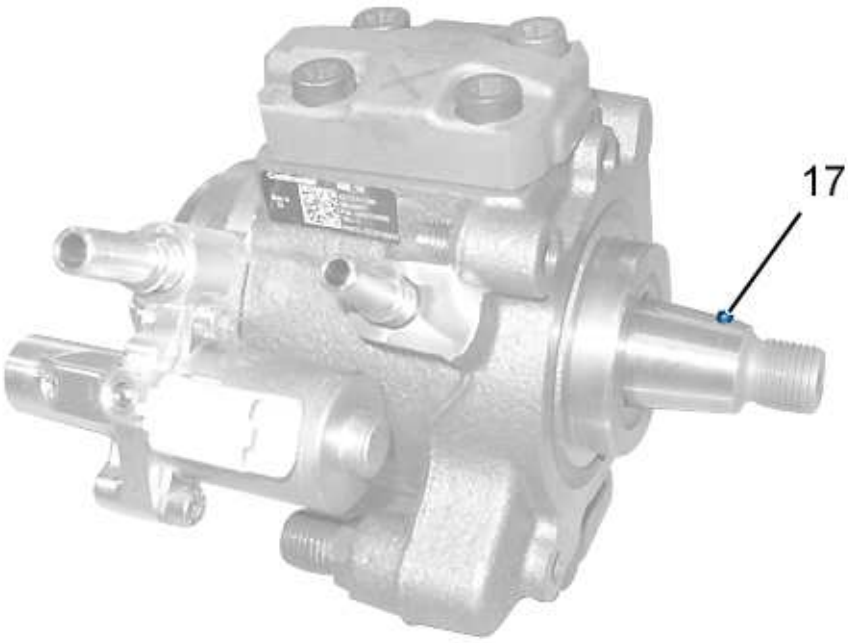

b1hg14cd

Check the presence of the pin (17) on the shaft of the high pressure fuel pump (16).

Place the high pressure fuel pump (16) on its front mounting .

Refit :

- The bolts (15)
- The rear mounting (12) of the high pressure fuel pump (16)
- The screws (11), (13), (14), without tightening them

Tighten (Follow the tightening sequence) :

- The (14) bolt
- The (13) bolt
- The (11) bolt

Refit :

- The support (8) of the EGR by-pass butterfly control electrovalve (10)
- The bolts (7), (9)

Clip the electrical harness (at "f").

Remove the plugs [0194-T].

> **WARNING :** Always replace the high pressure fuel pipes

Refit the high pressure fuel supply pipe (6).

Pre-tighten :

- The union (3) of the fuel high pressure supply pipe (6)
- The union (5) of the fuel high pressure supply pipe (6) ; Apply a counter-torque (at "e")

Tighten :

- The union (3) of the fuel high pressure supply pipe (6)
- The union (5) of the fuel high pressure supply pipe (6) ; Apply a counter-torque (at "e")

Connect the connectors (at "d").

Couple up the pipes (4).

Refit the pulley (1) of the high pressure fuel pump (16).

Place tool [0194-J] in the mounting of the high pressure fuel pump (at "a").

Refit the nut (2).

Remove the tool [0194-J].

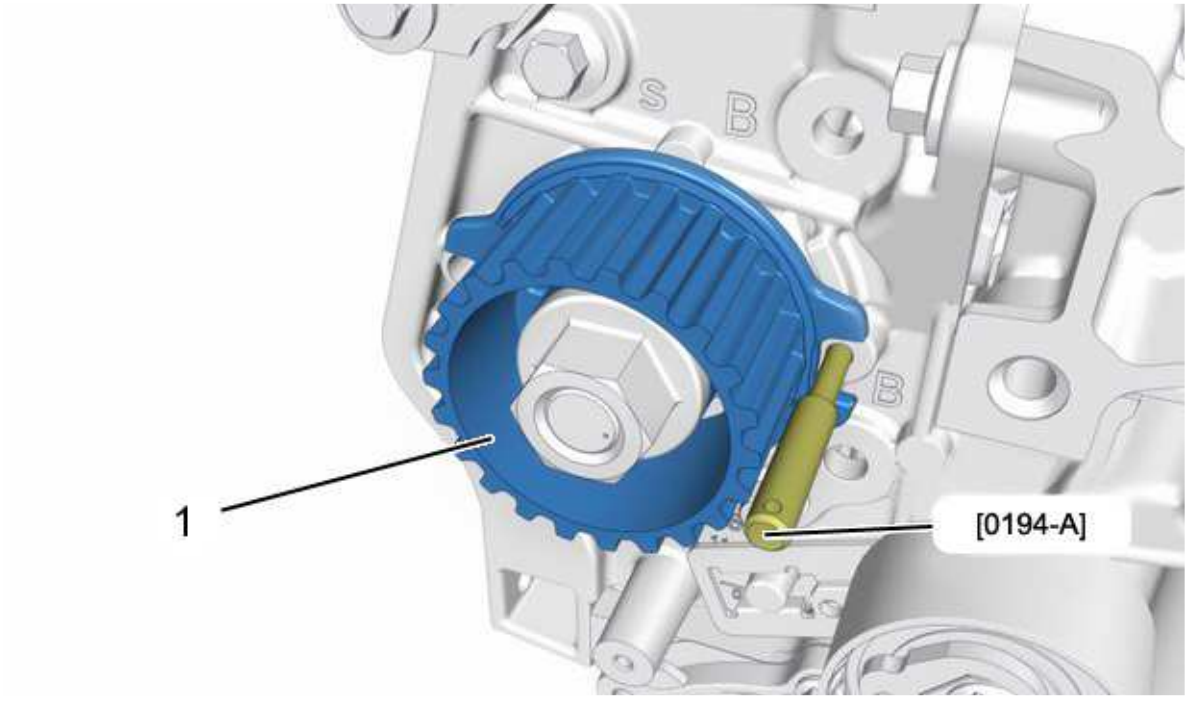

b1hg14dd

NOTE : When the timing is set : Peg the pulley (1) of the high pressure fuel pump (16) ; Using the pin [0194-A]

Refit :

- The timing belt
- The exhaust gas recycling module

- The fuel filter bracket
- The air inlet pipe
- The fuel filter complete
- The air filter housing
- The engine style cover (according to equipment)

Reprime the fuel circuit using the pump (through the pipe, check that there are no air bubbles in the fuel circuit).

> **WARNING :** Perform the operations that are required following a reconnection of the ancillaries battery

Reconnect the ancillaries battery.

5 - CHECKING FOR LEAKS

> **WARNING :** Spray the leak detector product on the diesel injector unions and on the fuel high pressure common injection rail

Place the vehicle on a two-post ramp.

Spray the leak detector product on the high pressure fuel unions.

Allow the product to dry.

Start the engine.

Check that there are no fuel leaks.

Accelerate the engine to 3500 r.p.m.

Check that there are no fuel leaks.

Carry out a road test.

Check that there are no fuel leaks.

Replace any defective parts.

REMOVING - REFITTING : TURBO AIR COOLER BY-PASS UNIT

ESSENTIAL : Observe the safety and cleanliness recommendations

1 - REMOVING

Disconnect the ancillaries battery.

Remove the engine style cover (according to equipment).

Release the harness (according to equipment).

1 - 1 - "A" assembly

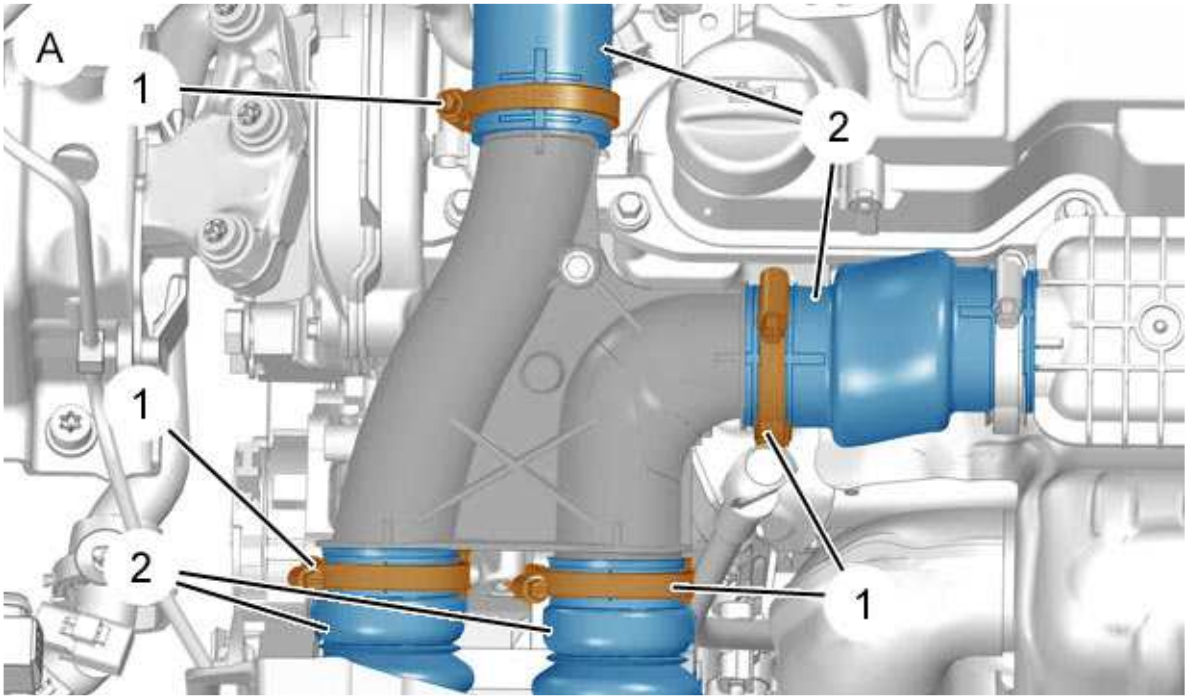

b1hg43kd

Loosen the clips (1).

WARNING : Cover the openings of the air inlet circuit

Uncouple the air unions (2).

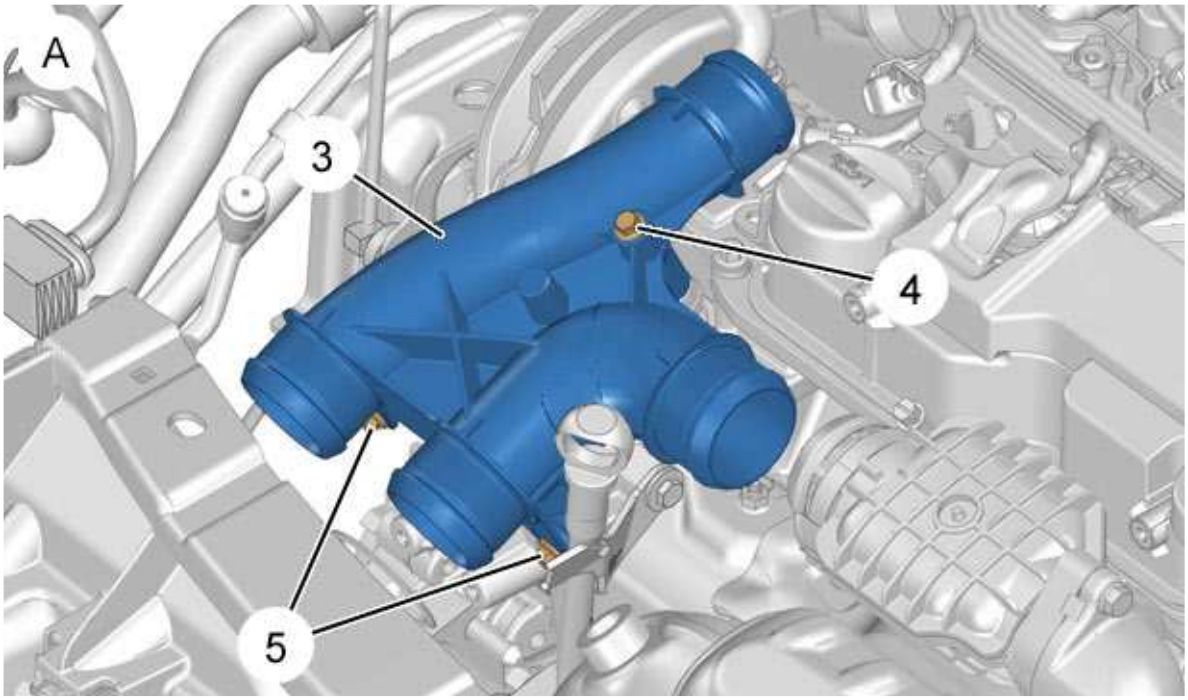

b1hg43ld

Remove :

- The (4) bolt
- The 2 bolts (5)
- The turbo air cooler air bypass unit (3)

1 - 2 - "B" assembly

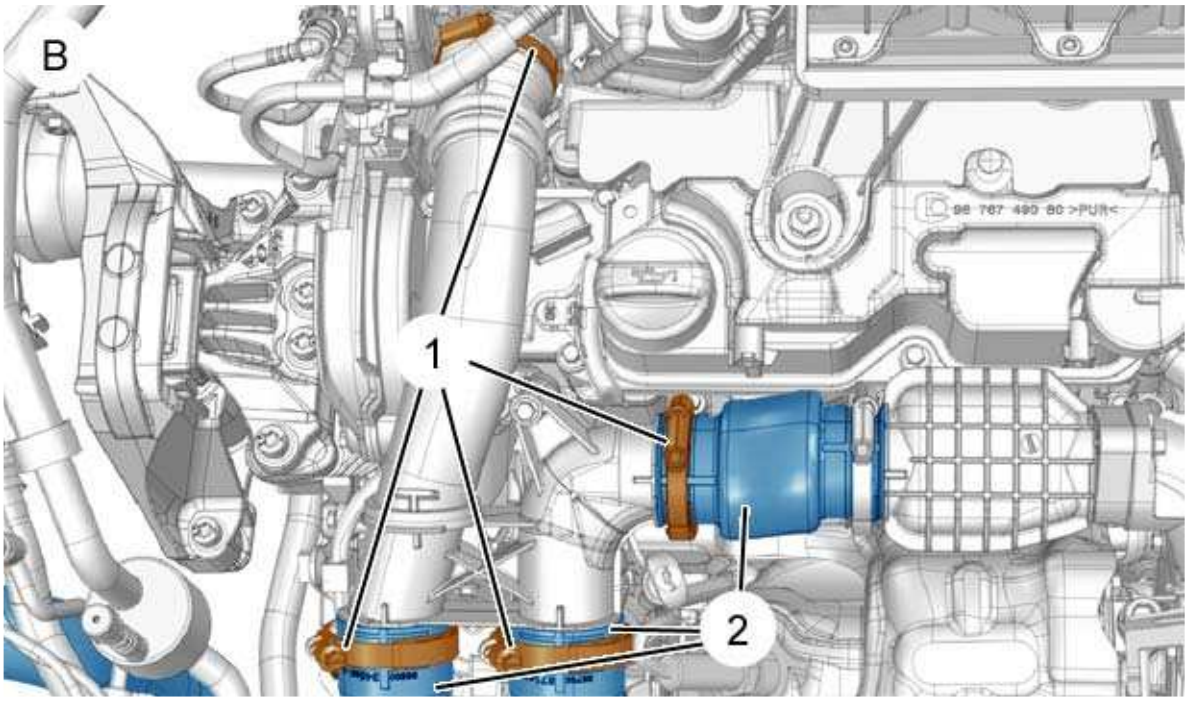

b1hg43md

Loosen the clips (1).

> **WARNING :** Cover the openings of the air inlet circuit

Uncouple the air unions (2).

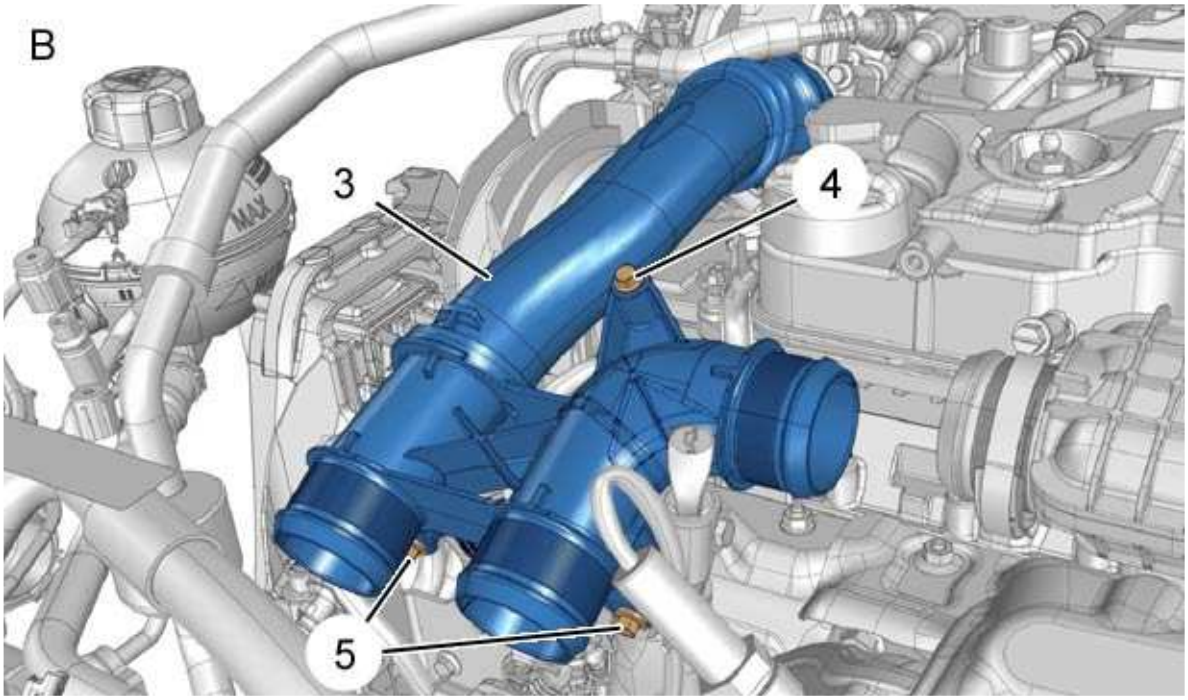

b1hg43od

Remove :

- The (4) bolt
- The 2 bolts (5)
- The turbo air cooler air bypass unit (3)

2 - REFITTING

> **WARNING :** Adhere to the tightening torques

Refit :

- The turbo air cooler air bypass unit (3)
- The 2 bolts (5)
- The (4) bolt
- The air hoses (2) ; Tighten the clips (1)
- The electrical harness (according to equipment)
- The engine style cover (according to equipment)

> **WARNING :** Perform the operations that are required following a reconnection of the

ancillaries battery

Reconnect the ancillaries battery.

REMOVAL - REFITTING : HIGH PRESSURE FUEL REGULATOR ON HIGH PRESSURE FUEL PUMP

ESSENTIAL : Observe the safety and cleanliness instructions

WARNING : Before removing any high pressure fuel sensor or actuator, carry out the diagnostics using the specific tools

1 - TOOLING

Equipment :

- Degreasing product (type SODIMAC)
- Cleaning tray
- Brush
- Vacuum extractor
- Round end-piece

Tool	Reference	Designation
[0194-T]  *e5ab05lt*	[0194-T]	Set of plugs
[1603-3]  *e5ab0pgt*	[1603-3]	Torque wrench adjustable from 5 to 25 Nm

2 - LOCATION

2 - 1 - BOSCH high pressure fuel pump

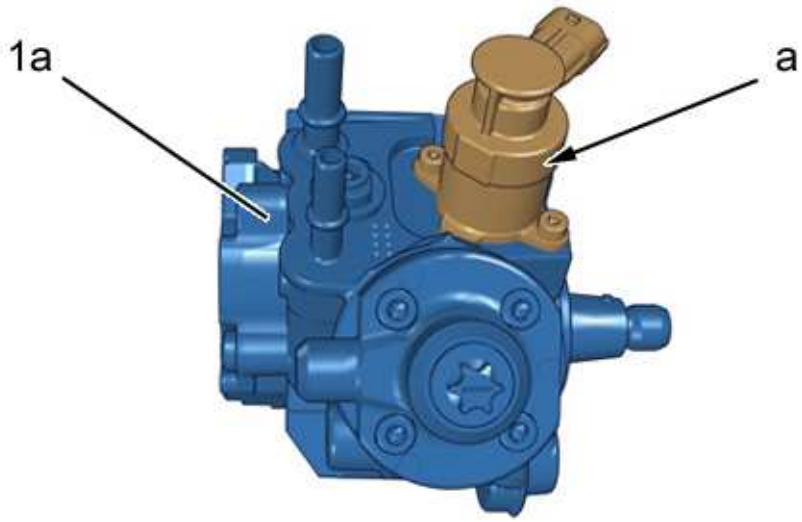

b1hg3ztd

The fuel high pressure regulator is fixed on the fuel high pressure pump (1a) ; At the rear right of the engine (at "a").

2 - 2 - CONTINENTAL/SIEMENS high pressure fuel pump

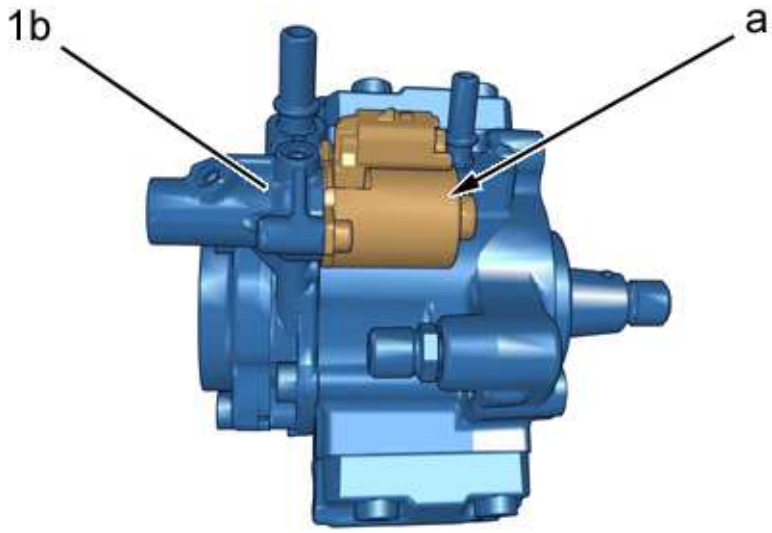

b1hg3zud

The fuel high pressure regulator is fixed on the fuel high pressure pump (1b) ; At the rear right of the engine (at "a").

3 - BOSCH HIGH PRESSURE FUEL PUMP

3 - 1 - Removal

> **ESSENTIAL :** Observe the safety and cleanliness instructions which are specific to high-pressure diesel injection engines (H.D.I.)

Disconnect the ancillaries battery.

Remove the engine style cover (according to equipment).

Move aside the engine rear acoustic shield .

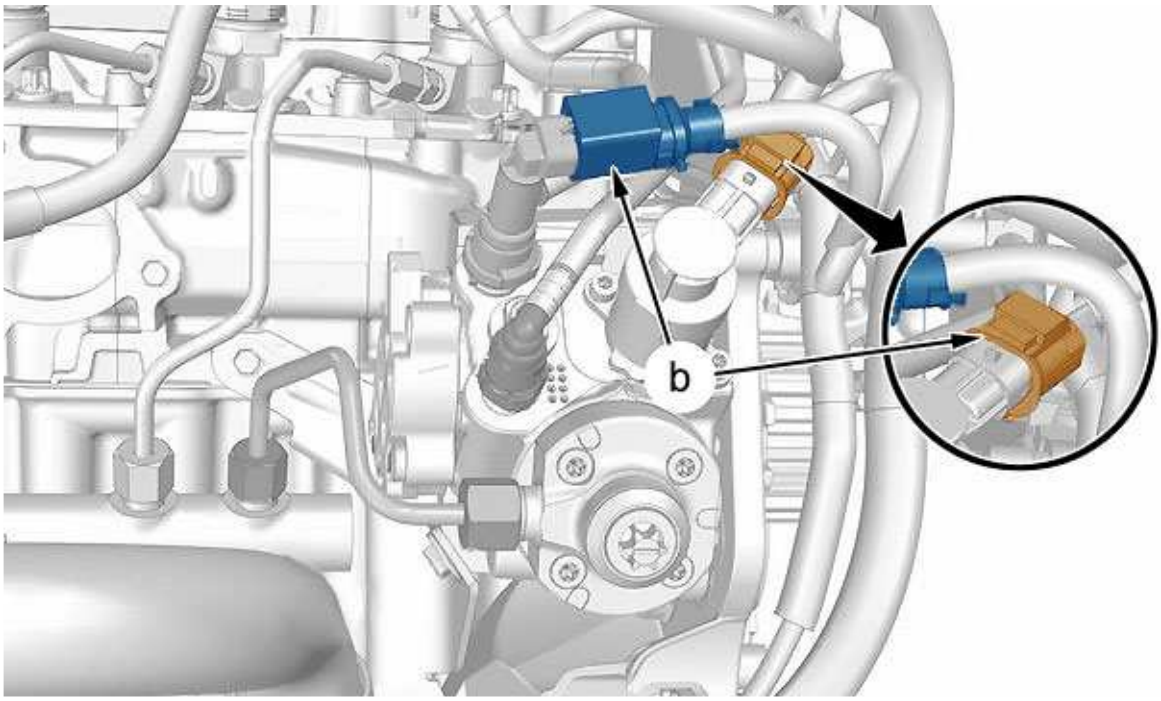

b1hg3zvd

Disconnect the connectors (at "b").

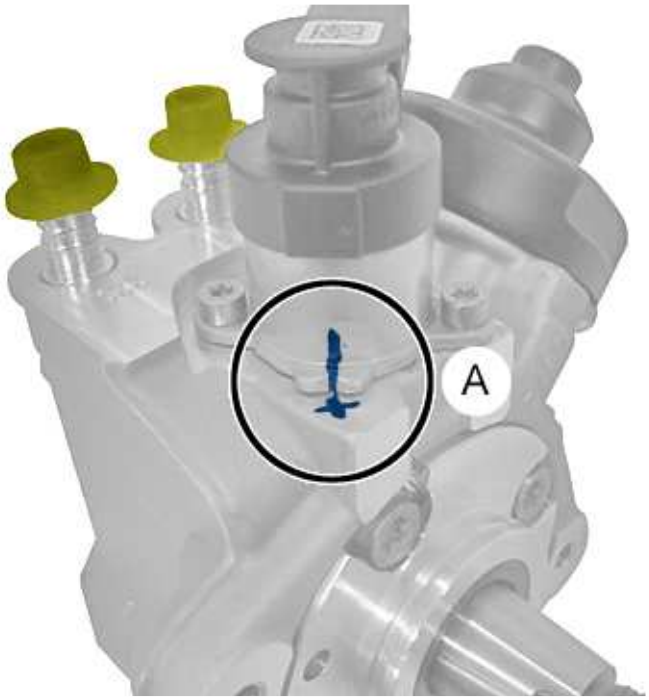

b1hg3zwd

"A" Direction of fitting marking.

Mark the position "A" of the fuel high pressure regulator in relation to the fuel high-pressure pump.

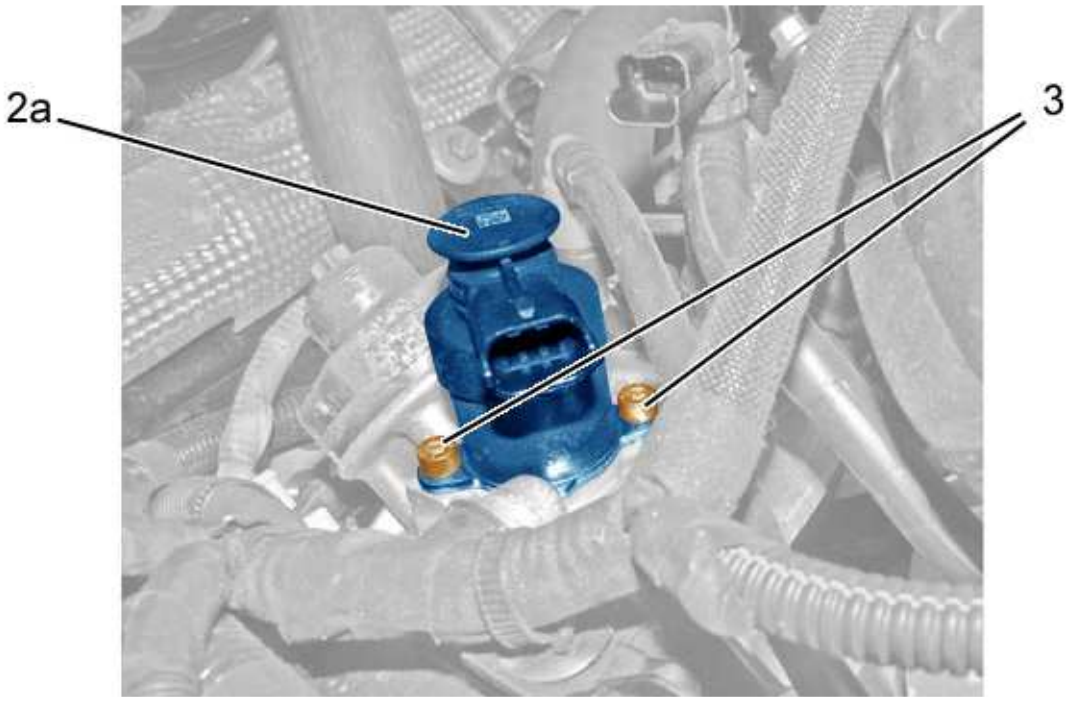

b1hg3zxd

WARNING : Protect the surrounding area from any spray of fuel

WARNING : Do not use a cutting or abrasive tool ; The seal faces should not show any traces of impacts or scratches

WARNING : Do not use the connector for leverage

WARNING : To prevent any risk of contaminating the fuel circuit, remove high-pressure fuel regulator (2a) only once the new part is available

Slacken screws (3) by a few turns.

Clean then vacuum the area surrounding the fuel high-pressure regulator (2a).

Remove the bolts (3).

Remove fuel high-pressure regulator (2a) by hand, unscrewing by half-turns from right-to-left while pulling.

3 - 2 - Refitting

ESSENTIAL : Observe the safety and cleanliness instructions which are specific to high-pressure diesel injection engines (H.D.I.)

WARNING : Adhere to the tightening torques

WARNING : Use a mirror to check that no contaminants are present in fuel high-pressure regulator housing (2a) ; Clean and vacuum if necessary

WARNING : Clean the gasket faces with an approved descaling product ; Do not use a cutting or abrasive tool ; The seal faces should not show any traces of impacts or scratches

WARNING : Fit the new fuel high pressure regulator (2a) immediately, so as to avoid any risk of contamination of the fuel circuit



b1hg3zyd

Lubricate the ring and the seals with vaseline (or similar).

> **WARNING :** Do not apply pressure to the connector

Insert the fuel high pressure regulator (2a), rotating it carefully.

Refit the bolts (3).

Connect the connectors (at "b").

> **WARNING :** Perform the operations that are required following a reconnection of the ancillaries battery

Reconnect the ancillaries battery.

3 - 3 - Learning

> **WARNING :** Following replacement of the fuel high pressure regulator (2a), perform its initialisation using the diagnostic tool

Use the diagnostic tool.

From the "spare parts" menu select the "high pressure fuel pump change" function and follow the programming procedure.

3 - 4 - Checking

Start the engine, at the same time operating the fuel circuit priming pump.

NOTE : Operation requiring two people

Check that there are no fuel leaks.

Stop the engine.

Refit :

- The engine rear acoustic shield
- The engine style cover (according to equipment)

4 - CONTINENTAL/SIEMENS HIGH PRESSURE FUEL PUMP

4 - 1 - Removal

ESSENTIAL : Observe the safety and cleanliness instructions which are specific to high-pressure diesel injection engines (H.D.I.)

Disconnect the ancillaries battery.

Remove the engine style cover (according to equipment).

Move aside the engine rear acoustic shield .

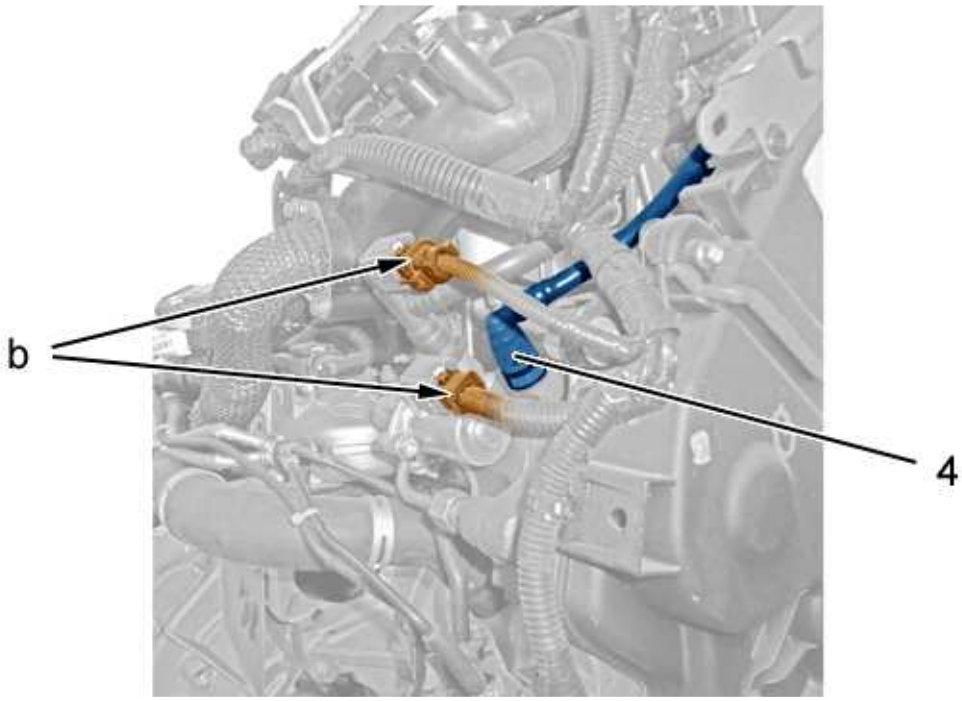

b1hg3zzd

WARNING : Before uncoupling, clean all the unions on the low pressure circuit

Uncouple the fuel supply pipe (4) and move it aside.

Disconnect the connectors (at "b").

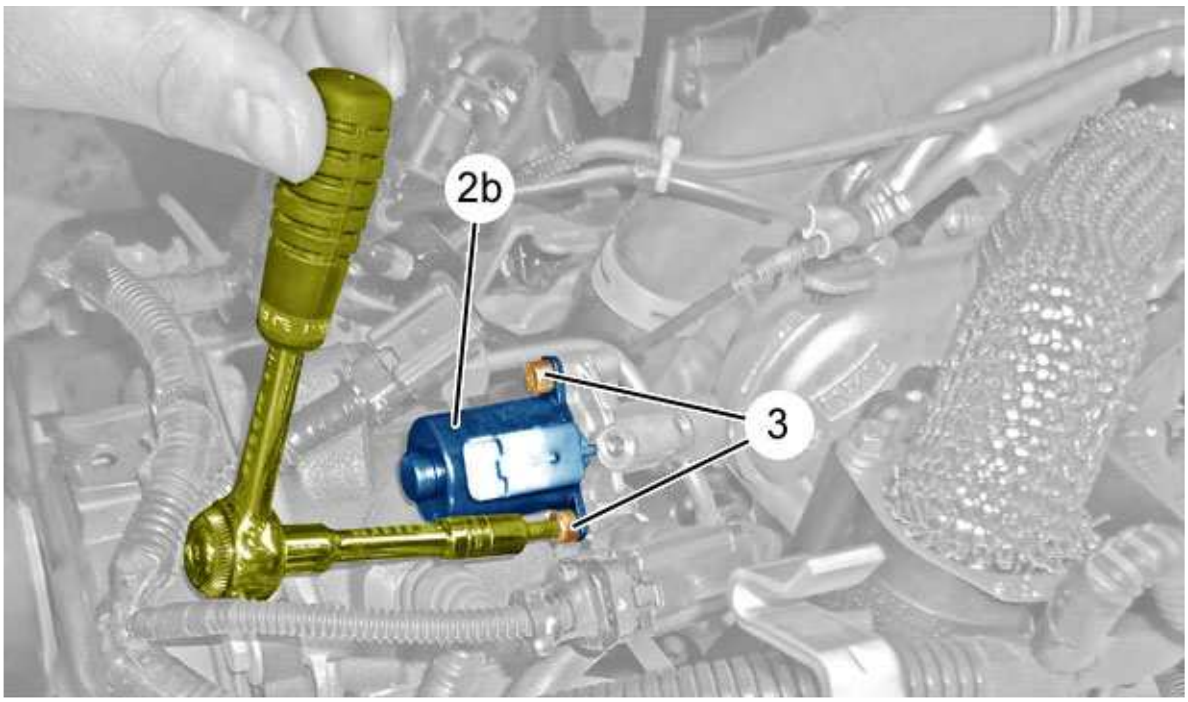

b1hg400d

WARNING : Protect the surrounding area from any spray of fuel

WARNING : Do not use a cutting or abrasive tool ; The seal faces should not show any traces of impacts or scratches

WARNING : Do not use the connector for leverage

WARNING : To prevent any risk of contaminating the fuel circuit, remove high-pressure fuel regulator (2b) only once the new part is available

Slacken screws (3) by a few turns.

Clean then vacuum the area surrounding the fuel high-pressure regulator (2b).

Remove the bolts (3).

Remove fuel high-pressure regulator (2b) by hand, unscrewing by half-turns from right-to-left while pulling.

4 - 2 - Refitting

ESSENTIAL : Observe the safety and cleanliness instructions which are specific to high-pressure diesel injection engines (H.D.I.)

WARNING : Adhere to the tightening torques

WARNING : Use a mirror to check that no contaminants are present in fuel high-pressure regulator housing (2b) ; Clean and vacuum if necessary

WARNING : Clean the gasket faces with an approved descaling product ; Do not use a cutting or abrasive tool ; The seal faces should not show any traces of impacts or scratches

WARNING : Fit the new fuel high pressure regulator (2b) immediately, so as to avoid any risk of contamination of the fuel circuit



b1hg401d

Lubricate the ring and the seals with vaseline (or similar).

WARNING : Do not apply pressure to the connector

Insert the fuel high pressure regulator (2b), rotating it carefully.

Refit the bolts (3).