Connect the connectors (at "b").

Connect the fuel supply pipe (4).

> **WARNING :** Perform the operations that are required following a reconnection of the ancillaries battery

Reconnect the ancillaries battery.

4 - 3 - Learning

> **WARNING :** According to the engine ECU version : Following replacement of the fuel high pressure regulator (2b), perform its initialisation using the diagnostic tool

Use the diagnostic tool.

From the "spare parts" menu select the "high pressure fuel pump change" function and follow the programming procedure.

4 - 4 - Checking

Start the engine, at the same time operating the fuel circuit priming pump.

> **NOTE :** Operation requiring two people

Check that there are no fuel leaks.

Stop the engine.

Refit :

- The engine rear acoustic shield
- The engine style cover (according to equipment)

DISMANTLING - RE-ASSEMBLY : CAMSHAFT POSITION SENSOR

ESSENTIAL : Observe the safety and cleanliness recommendations

1 - LOCATION

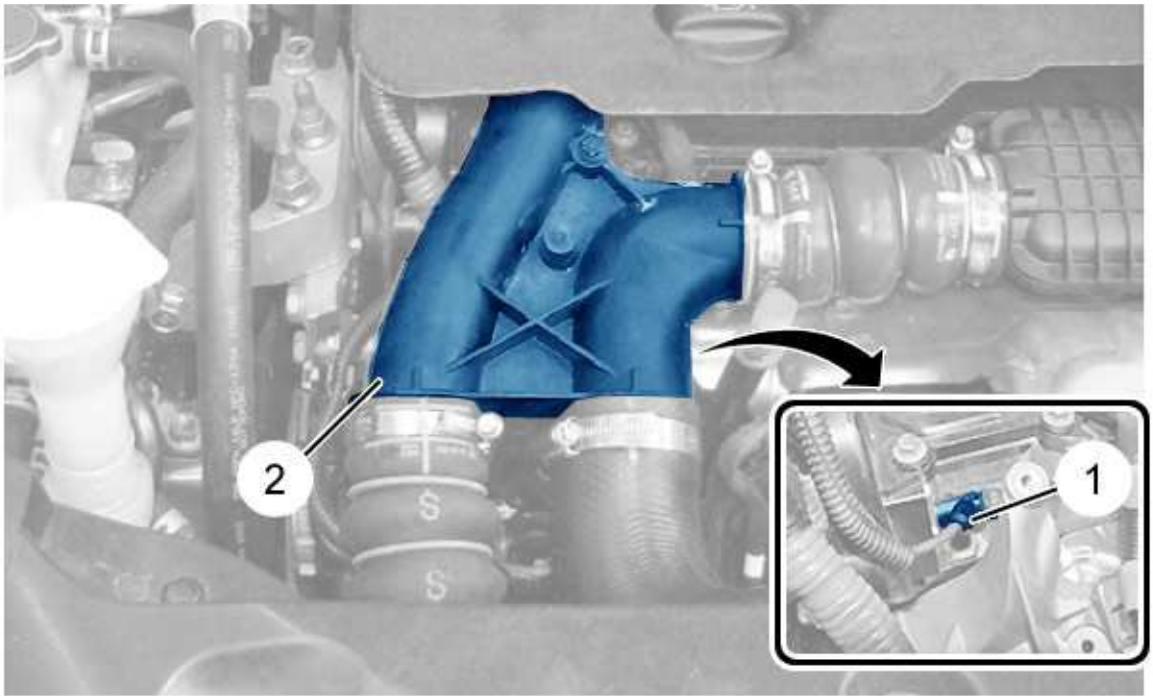

b1hg3vjd

(1) Camshaft position sensor.

(2) Air intake by-pass valve .

NOTE : The camshaft position sensor (1) is located under the air intake by-pass valve (2)

2 - REMOVING

ESSENTIAL : Respect the safety and cleanliness recommendations that are specific to high pressure diesel injection (HDi) engines

Disconnect the ancillaries battery.

Remove the engine style cover .

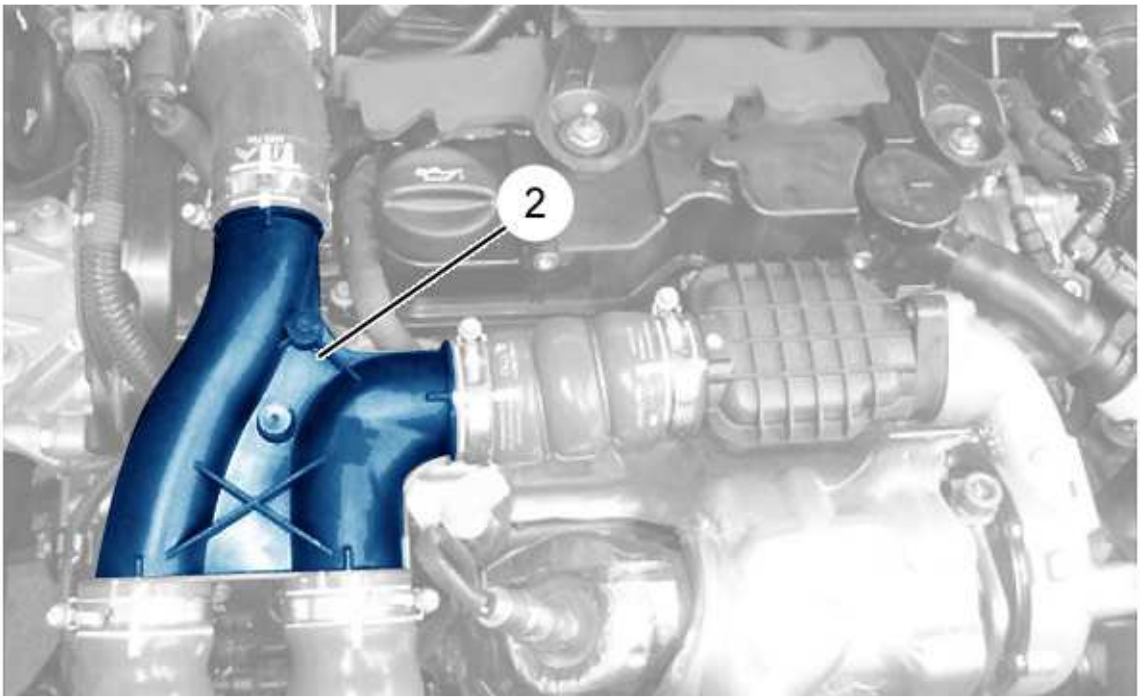

b1hg2cud

Remove :

- The air admission bypass valve (2)
- The auxiliary equipment drive belt
- **The alternator**
- The dipstick guide fixing bolt

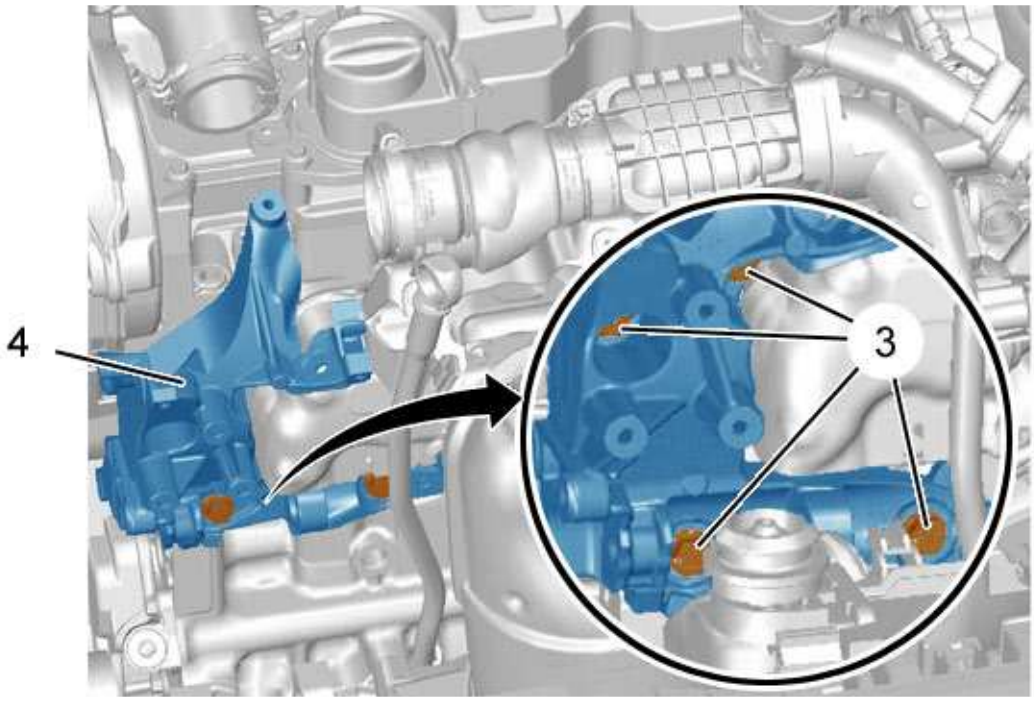

b1hg3vkd

Remove :

- The 4 fixing bolts (3) of the support (4)
- The alternator support (4)

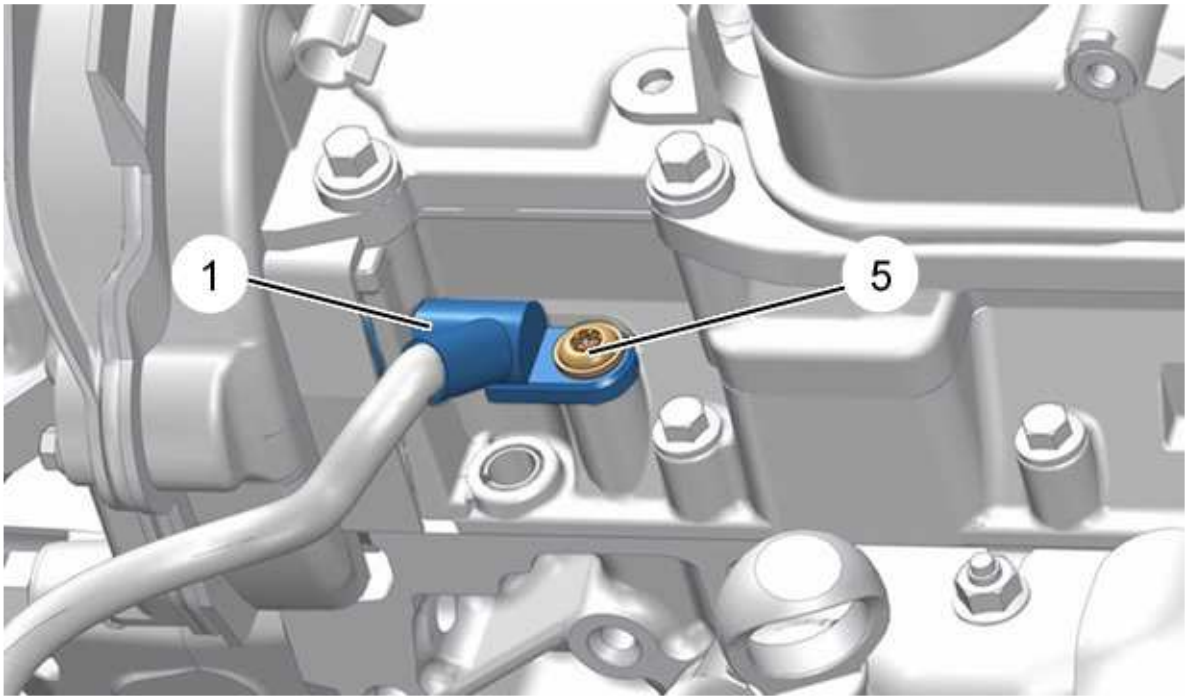

b1hg3vsd

Remove :

- The (5) bolt
- The camshaft position sensor (1)

3 - REFITTING

> **WARNING : Adhere to the tightening torques**

Refit :

- The camshaft position sensor (1)
- The (5) bolt

Move aside the electrical harness .

Refit :

- The alternator support (4)
- The 4 fixing bolts (3) of the support (4)
- The dipstick guide fixing bolt
- **The alternator**
- The auxiliary equipment drive belt

- The air admission bypass valve (2)
- The engine cover

> **WARNING :** Perform the operations that are required following a reconnection of the ancillaries battery

Reconnect the ancillaries battery.

4 - CHECKING

Start the engine.

Check the operation of the camshaft position sensor (1) ; Using the diagnostic equipment.

DISMANTLING - RE-ASSEMBLY : ALTERNATOR

ESSENTIAL : Observe the safety and cleanliness recommendations

1 - REMOVING

Place the vehicle on a two-post ramp.

Disconnect the ancillaries battery.

Remove :

- The engine cover
- The protective panel under the engine
- The under-bumper spoiler
- The front right mud guard
- The protection cover from the ancillary drive belt
- The accessories drive belt
- The air admission bypass valve

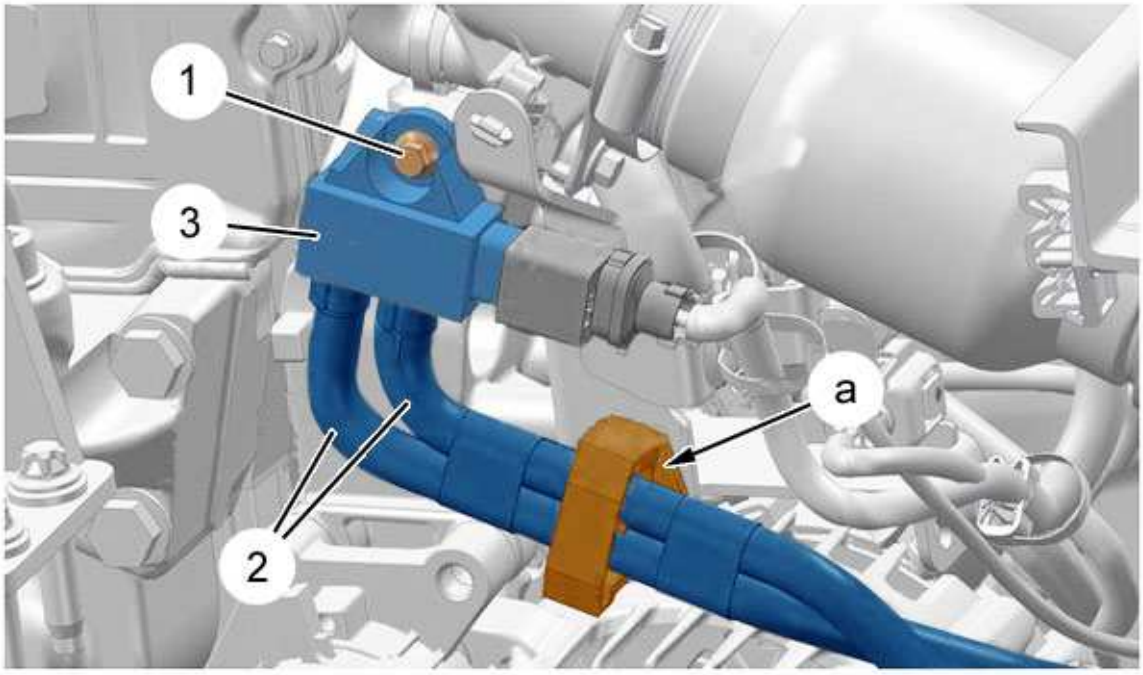

d1ag0tjd

Remove the bolt (1).

Unclip : The flexible pressure take-off pipes (2) (at "a").

Release : The exhaust gas pressure sensor (3) with the flexible pressure take-off pipes (2).

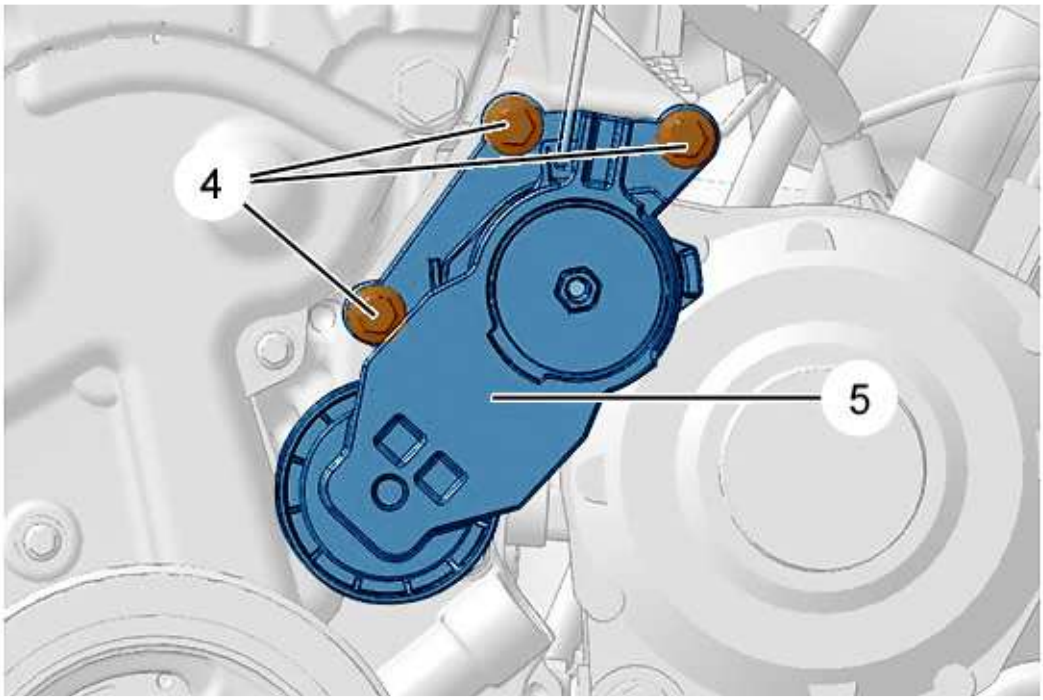

d1ag0tkd

Remove :

- The bolts (4)
- The dynamic roller tensioner (5)

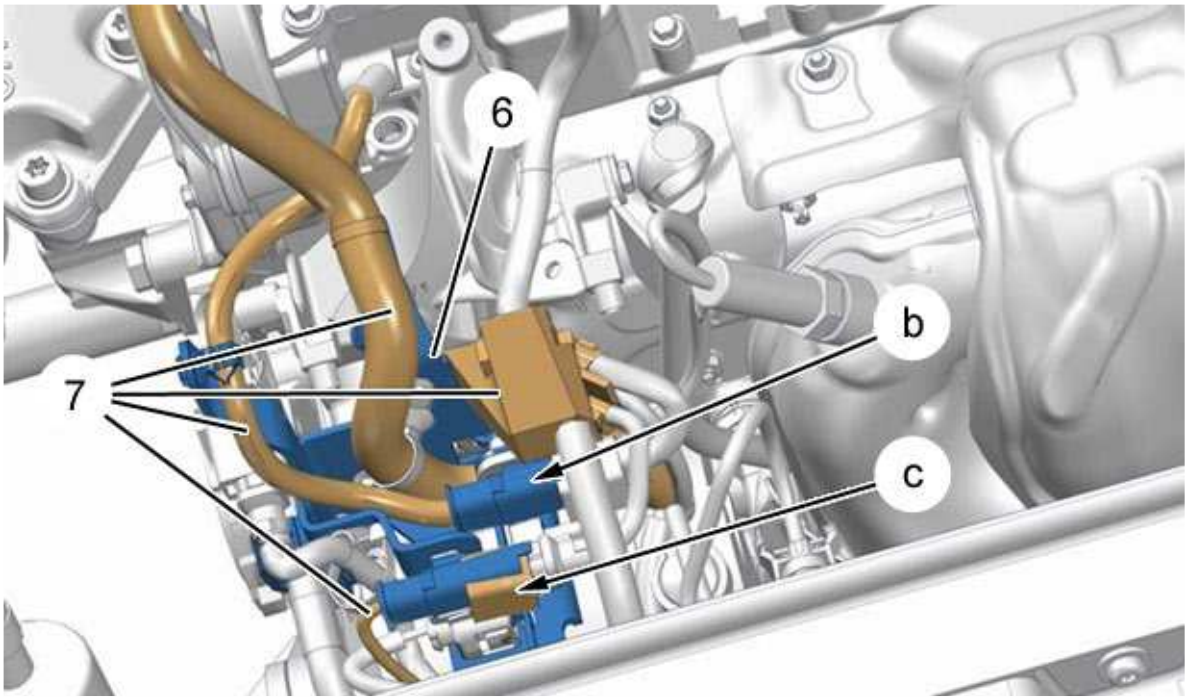

d1ag0tld

Disconnect the connectors (at "b", "c").

Unclip the electrical harnesses (7) from the battery support (6).

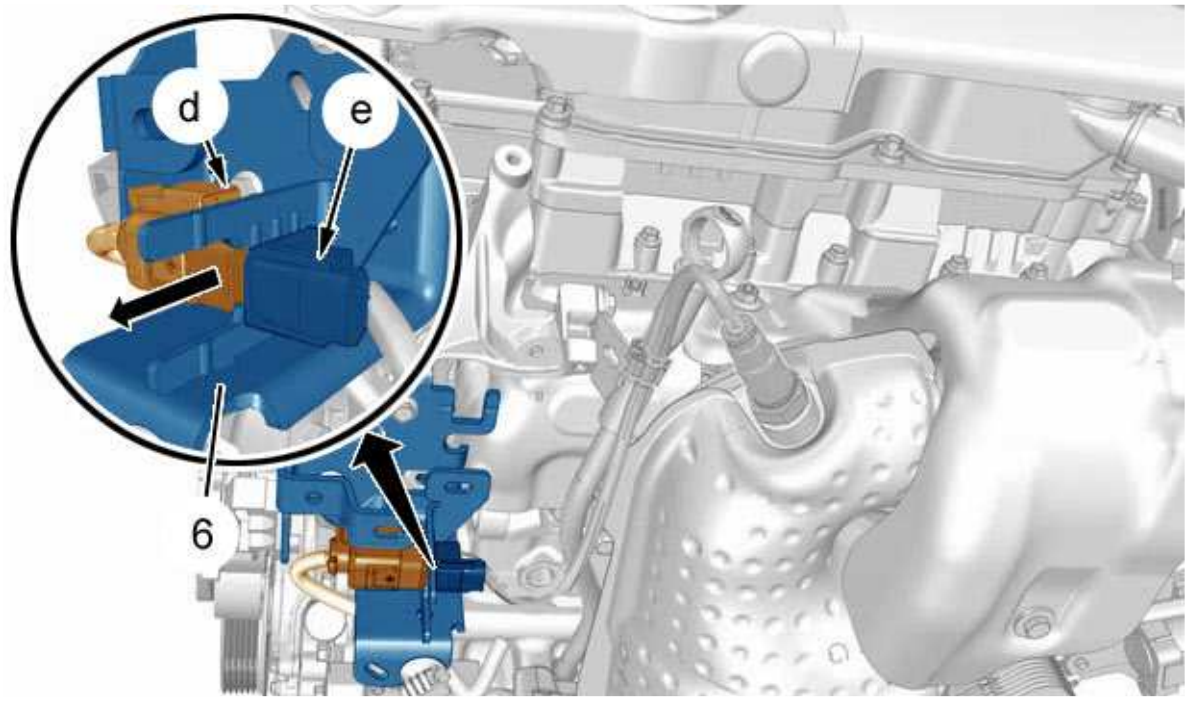

d1ag0tmd

Unclip : The oxygen sensor connector on the support (6) (at "e") (following the arrow).

Disconnect the oxygen sensor connector (at "d").

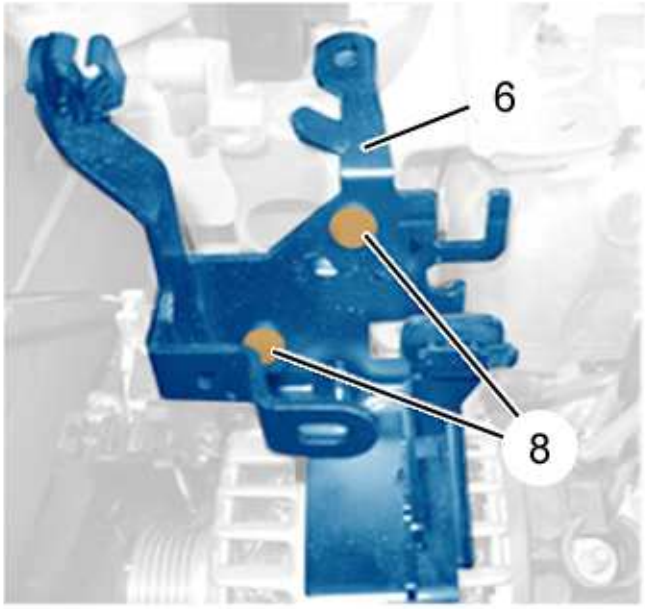

d1ag0tnd

Unclip and move aside the electrical harnesses attached to the support (6).

Remove :

- The 2 support (6) bolts (8)
- The electrical harness (6) support

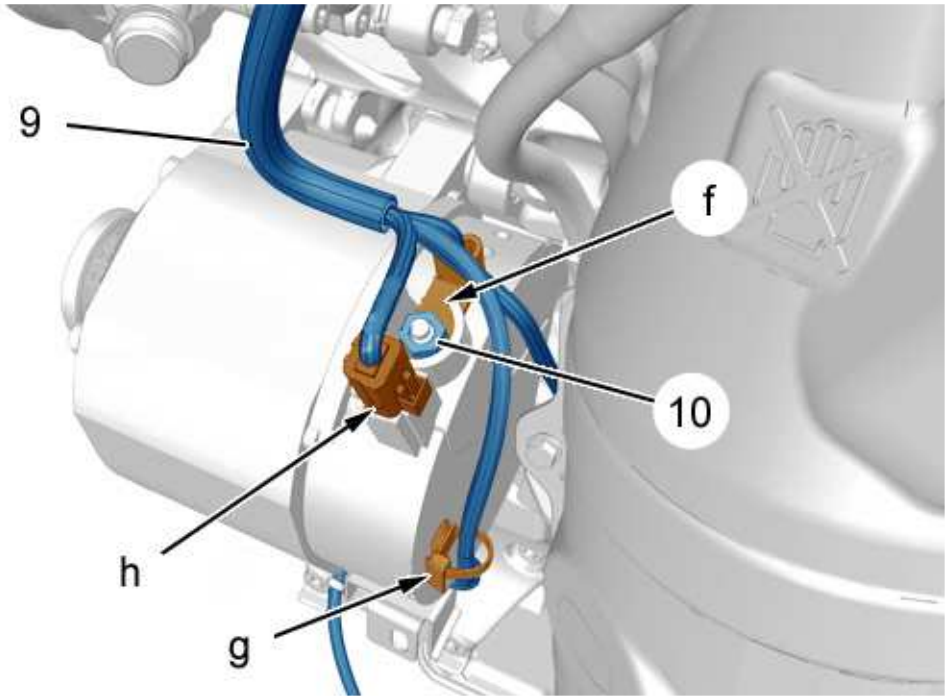

d1ag0tod

Remove :

- The alternator supply closer (at "f")
- The nut (10)

Unplug :

- The connector (at "h")
- The alternator supply (at "f")

Release and move aside the electrical harness (9) (at "g").

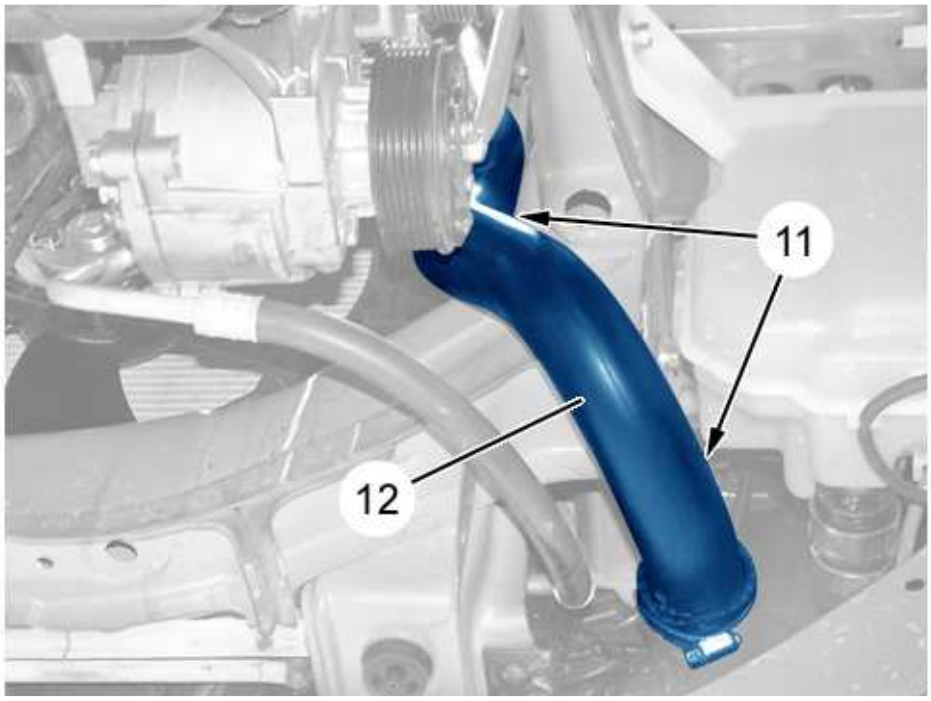

d1ag0tpd

Remove :

- The 2 bolts (11)
- The air duct (12)

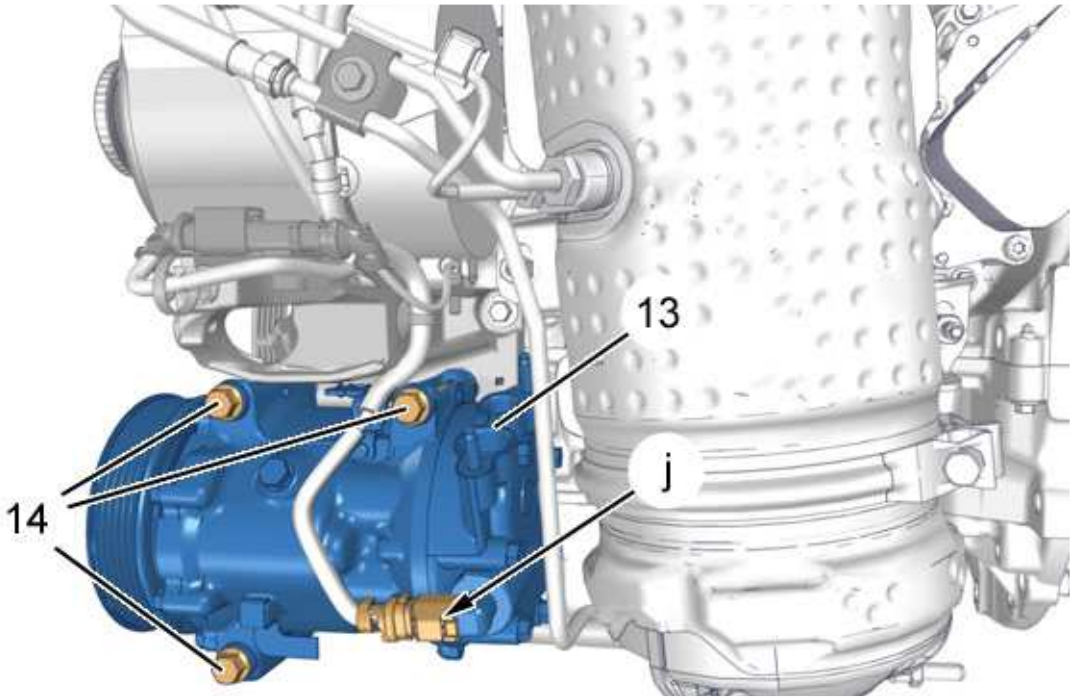

d1ag0tqd

Disconnect the air conditioning compressor connector (at "j").

Remove the bolts (14).

Move aside and secure the air conditioning compressor (13) (without disconnecting the pipes).

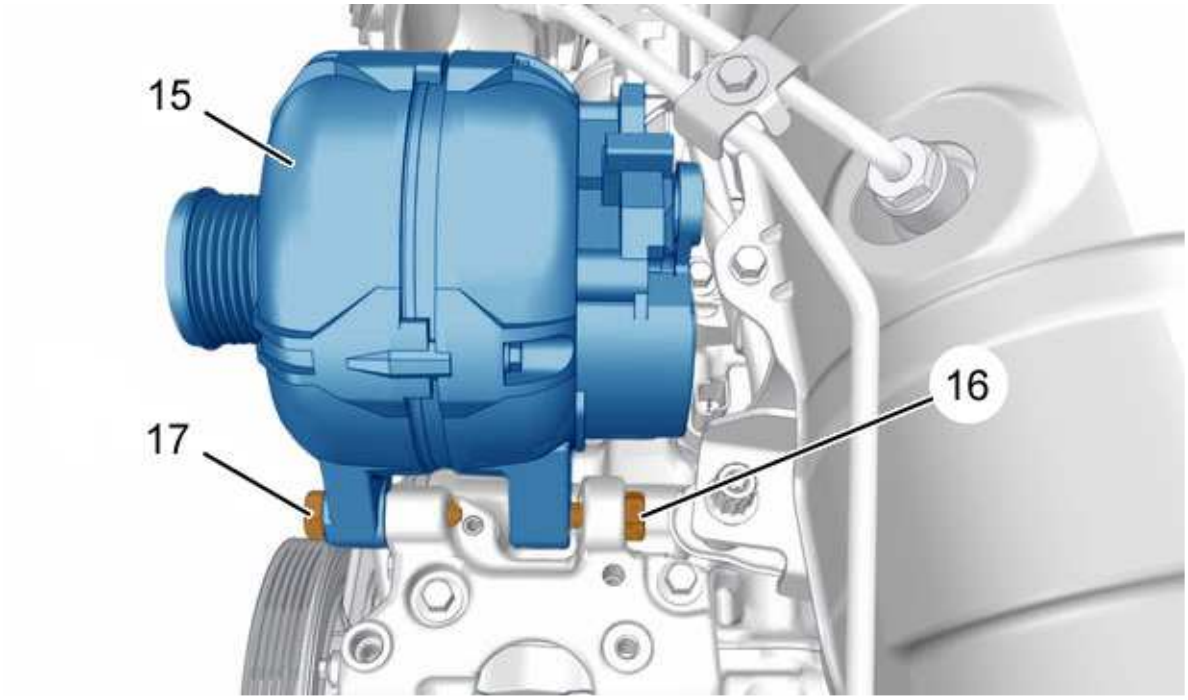

d1ag0trd

Slacken the bolt (16) by a few threads to release the split ring .

Remove mounting bolt (17) from alternator (15).

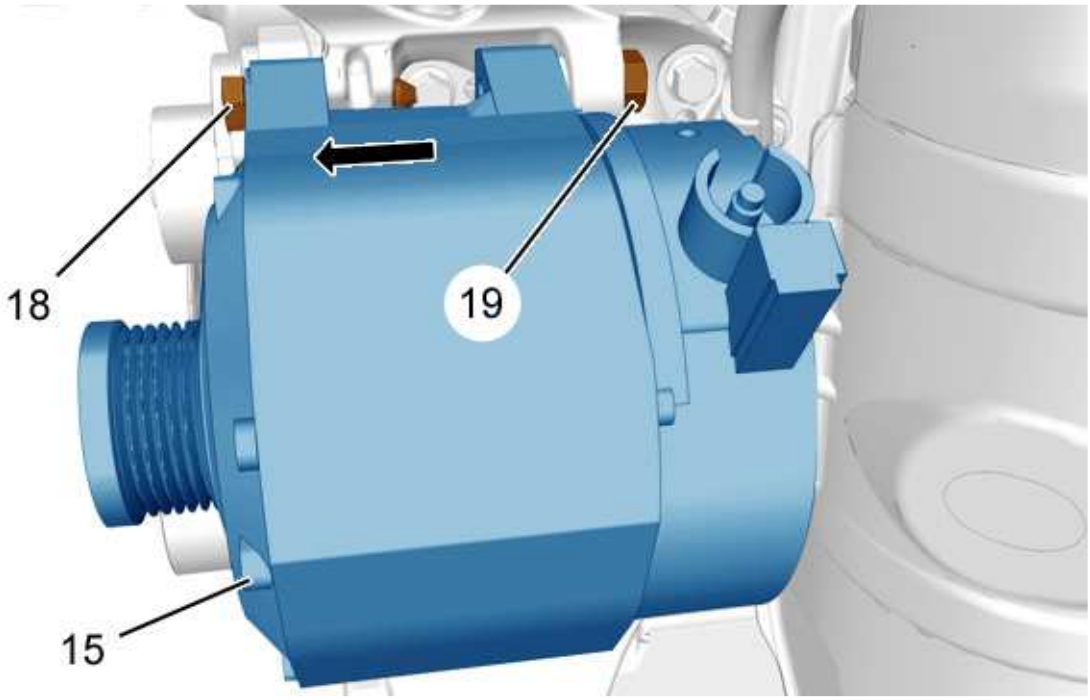

d1ag0tsd

Slacken the bolt (19) by a few threads to release the split ring .

Remove bolts (18).

Slide the alternator (15) (following the arrow).

> **WARNING :** While removing, take care not to damage the particle filter pressure take-off pipes (2)

Remove the alternator (15) ; From above.

2 - REFITTING

> **WARNING :** Adhere to the tightening torques

> **WARNING :** Check that the guide roller rotates freely (without resistance) ; Replace any defective parts (If necessary)

Refit :

- The alternator (15) fitted with the split rings and bolts (16), (19) assembly
- The bolt (18) (without tightening)
- The bolt (17)
- Tighten the bolts (16), (17)

Refit :

- The air-conditioning compressor (13)
- The 3 bolts (14)

Connect the connector (at "j").

Refit :

- The air duct (12)
- The 2 bolts (11)

Clip the electrical harness (9) (as "g").

Connect :

- The alternator supply (at "f")
- The connector (at "h")

Refit :

- The nut (10)
- The rubber blank (as "f")
- Tighten the bolts (18), (19)

Refit :

- The electrical harness (6) support
- The 2 support (6) bolts (8)

Connect : The oxygen sensor connector (at "d").

Clip : The oxygen sensor connector on the support (6) (at "e") (following the arrow).

Clip the electrical harnesses (7) on the support (6).

Connect the connectors (at "b", "c").

Refit :

- The dynamic roller tensioner (5)
- The bolts (4)
- The exhaust gas pressure sensor (3) with the flexible pressure take-off pipes (2)
- Clip : The flexible pressure take-off pipes (2) (at "a")

Refit :

- The bolt (1)
- **The air admission bypass valve**
- **The accessories drive belt**
- The protection cover from the ancillary drive belt
- The front right mud-shield
- The under-bumper spoiler
- The protective panel under the engine
- The engine cover

> **WARNING :** Perform the operations that are required following a reconnection of the ancillaries battery

Reconnect the ancillaries battery.

DISMANTLING - RE-ASSEMBLY : TURBOCHARGER PRESSURE REGULATION ELECTROVALVE

ESSENTIAL : Observe the safety and cleanliness recommendations

1 - TOOLING

tool	REFERENCE	Designation
[0172-Z] 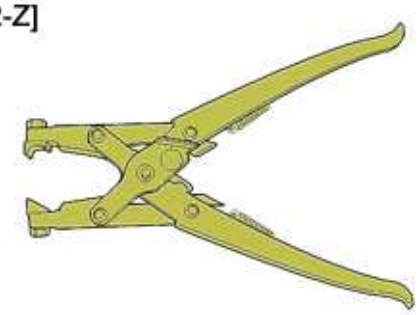 *e5ai00dt*	[0172-Z]	Pliers for removal/refitting Clic clips

2 - LOCATION

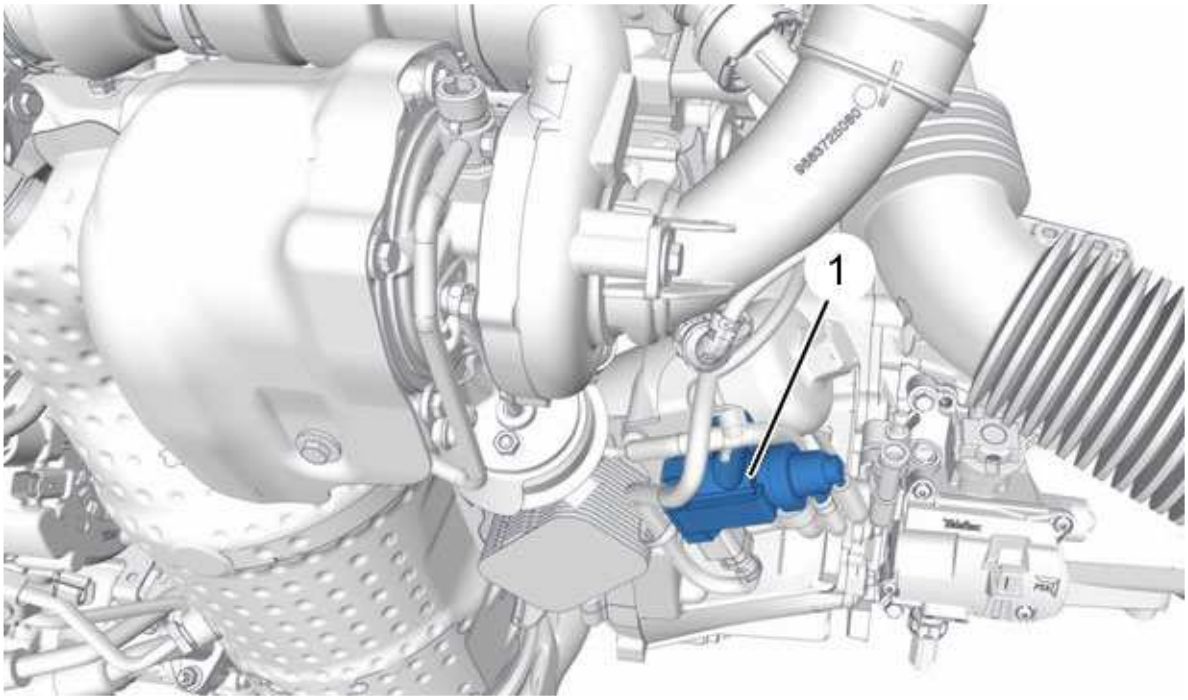

b1hg2ckd

(1) Turbocharger pressure regulation electrovalve (Variable geometry turbocharger electrovalve).

3 - REMOVING



b1hg3w5d

Remove :

- The engine cover
- The air duct (2)

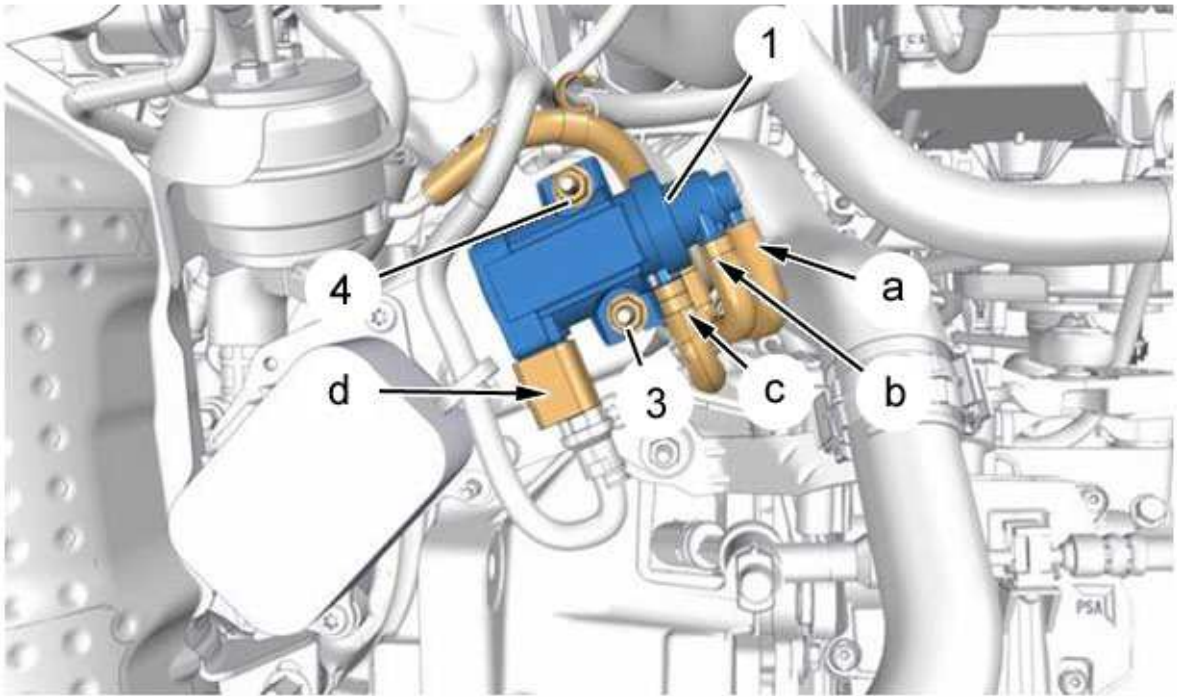

b1hg3w6d

Disconnect the connector (at "d").

WARNING : On each removal : Mark the order of the vacuum pipes being removed

Vacuum pipe "a" : Remove the "CLIC" clip ; Using tool [0172-Z].

Uncouple : The vacuum pipes "a","b","c".

Unscrew nut (3).

Remove :

- The nut (4)
- The turbocharger pressure regulation solenoid valve (1)

4 - REFITTING

WARNING : Adhere to the tightening torques

Refit : The turbocharger pressure regulation solenoid valve (1).

Tighten the nut (3) (by hand).

Refit the nut (4).

Tighten the nuts (3), (4).

WARNING : When refitting : Do not reverse the vacuum pipes

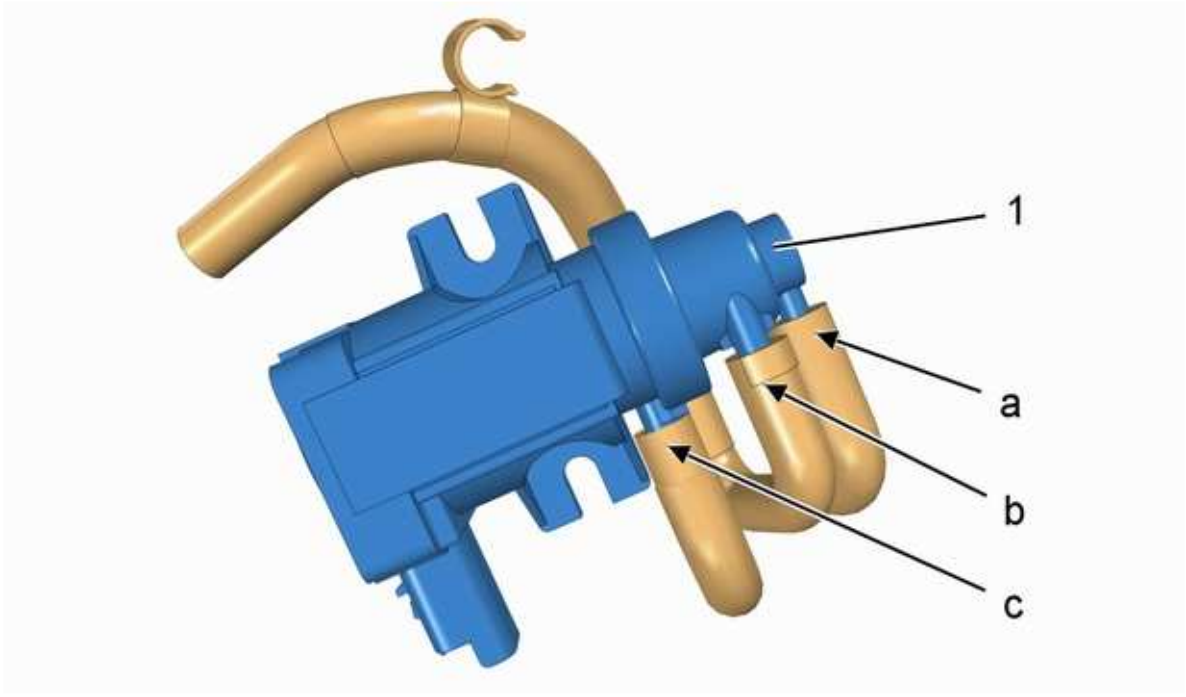

b1hg0umd

Couple up : The vacuum pipes "a","b","c" :

- Sleeve "a" without marking : Vacuum inlet
- Sleeve "b" with marking : White spot : Turbocharger control solenoid valve
- Sleeve "c" with marking : breather

Vacuum pipe "a" : Refit the clip "CLIC" ; Using tool [0172-Z].

Connect the connector (at "d").

Refit :

- The air duct (2)
- The engine cover

DISMANTLING - RE-ASSEMBLY : HIGH PRESSURE FUEL SENSOR

ESSENTIAL : Observe the safety and cleanliness recommendations

WARNING : Outside the warranty period, removing-refitting the fuel high pressure sensor only is authorised

WARNING : During the warranty period, for removing-refitting the fuel high pressure sensor, refer to the procedure for removing-refitting the fuel high pressure common injection rail

1 - TOOLING

Equipment :

- Leak detector
- Long socket (27 mm)

tool	Reference	Designation
[1603-A]  *e5ag07kt*	[1603-A]	Torque wrench
[0194-T] 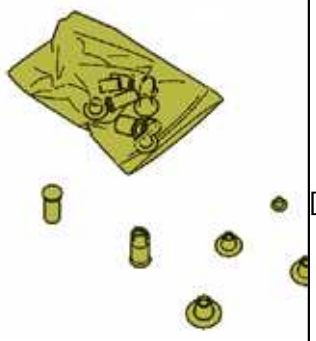 *e5ab05lt*	[0194-T]	plugs kit

2 - LOCATION

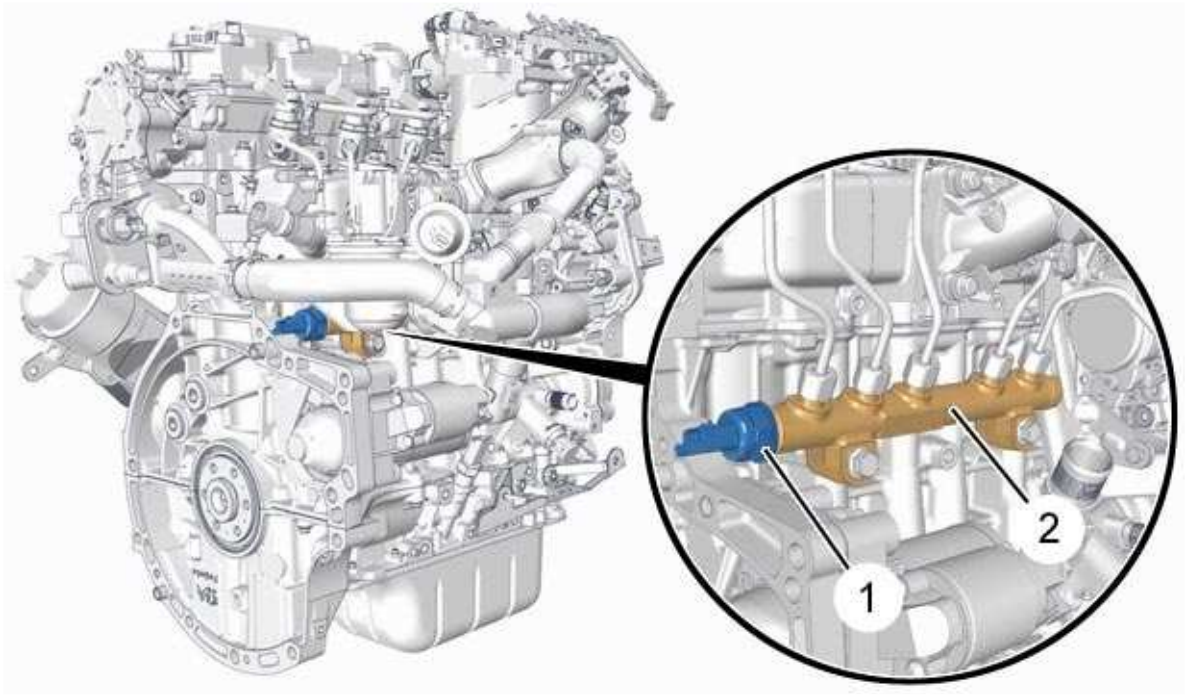

b1cg01ud

(1) High pressure fuel sensor .

(2) Fuel high pressure common injection rail .

3 - REMOVING

> **ESSENTIAL :** **Respect the safety and cleanliness recommendations that are specific to high pressure diesel injection (HDi) engines**

Place the vehicle on a ramp with the wheels free.

Disconnect the ancillaries battery.

Remove :

- The engine cover
- **The ancillaries battery**
- The battery tray
- **Remove the air filter unit assembly**

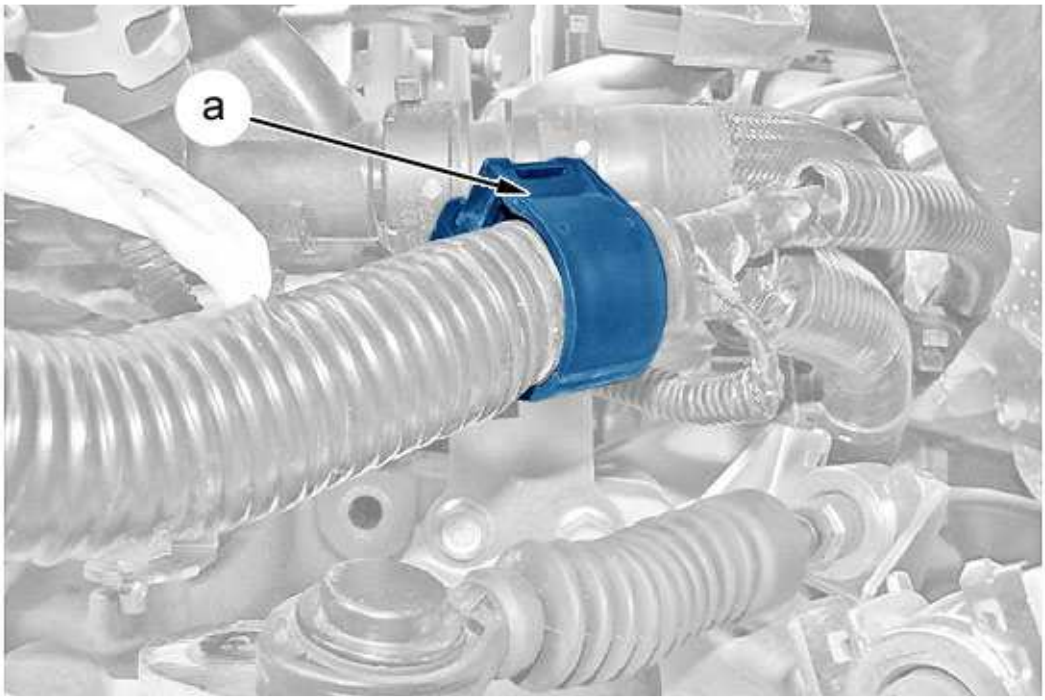

b1hg3wqd

Unfasten and move aside : The engine harness (at "a").

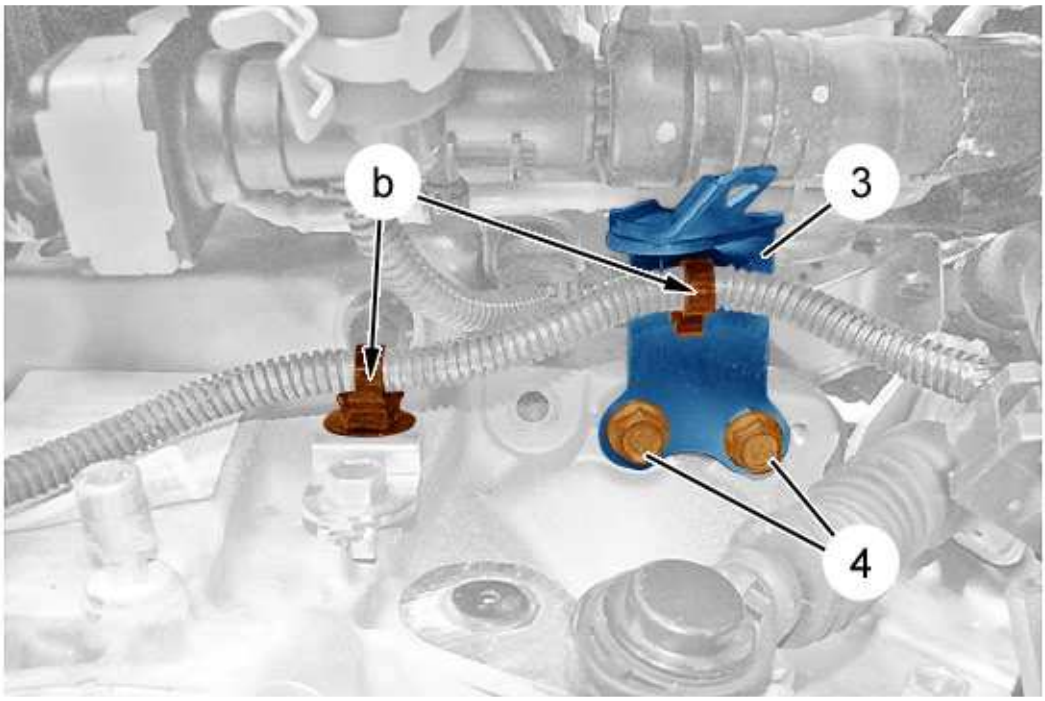

b1hg3wrd

Unclip the harness (at "b").

Remove :

- The 2 bolts (4)

- The engine harness support (3)

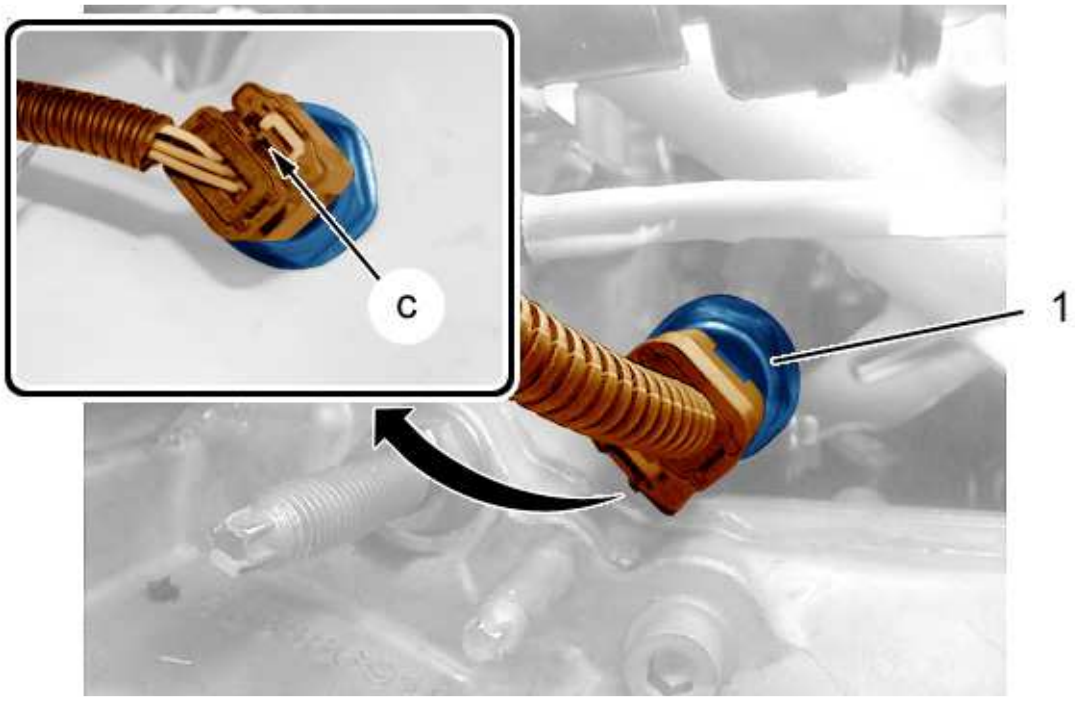

b1hg3wsd

Disconnect the connector ; Using a thin screwdriver (at "c") (Push - Lever up).

Remove the fuel high-pressure sensor (1) ; Using a long 27 mm socket.

Plug the fuel high pressure common injection rail ; Using the tools [0194-T].

4 - REFITTING

> **ESSENTIAL :** Respect the safety and cleanliness recommendations that are specific to high pressure diesel injection (HDi) engines

> **WARNING :** Adhere to the tightening torques

Remove the tools [0194-T] (fuel high pressure common injection rail).

> **WARNING :** Always replace the seal

Replace the fuel high pressure sensor (1) fitted with a new seal .

Reconnect the connector (at "c").

Refit :

- The engine harness support (3)

- The 2 bolts (4)

Clip in place :

- The harness (at "b")
- The engine electric harness (at "a")

Refit :

- **The air filter housing assembly**
- The engine cover
- The battery tray
- **The ancillaries battery**

> **WARNING :** Perform the operations that are required following a reconnection of the ancillaries battery

Reconnect the ancillaries battery.

5 - CHECKING FOR LEAKS

Method of checking :

- Spray the leak detector product on the union of the high pressure sensor
- Allow the product to dry
- Start the engine
- Check the absence of leaks
- Accelerate to reach maximum engine speed
- Check the absence of leaks
- Carry out a road test
- Check the absence of leaks

Replace any defective parts (if necessary).

DISMANTLING - RE-ASSEMBLY : AIR FILTER UNIT

ESSENTIAL : Observe the safety and cleanliness recommendations

ESSENTIAL : Respect the safety and cleanliness recommendations that are specific to high pressure diesel injection (HDi) engines

1 - FILTERING ELEMENT

1 - 1 - Removing

Remove the engine style cover .

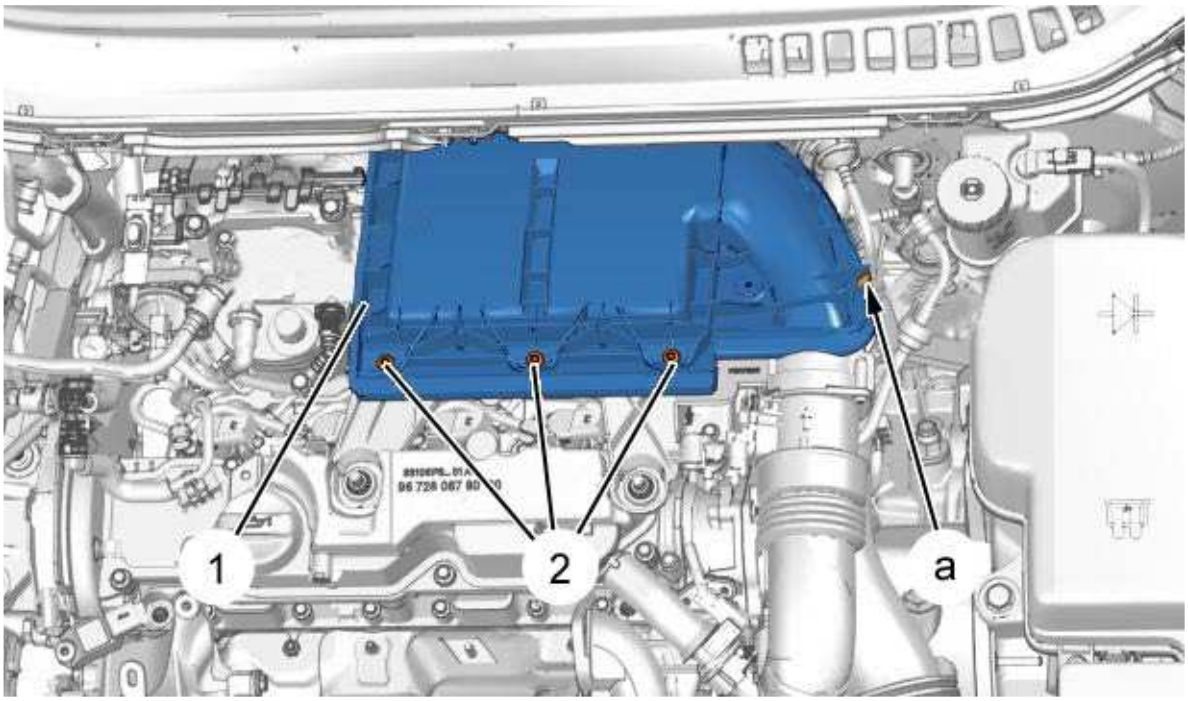

b1hg3tsd

Remove :

- The 3 bolts (2)
- The retention clip (at "a")
- The air filter cover (1)

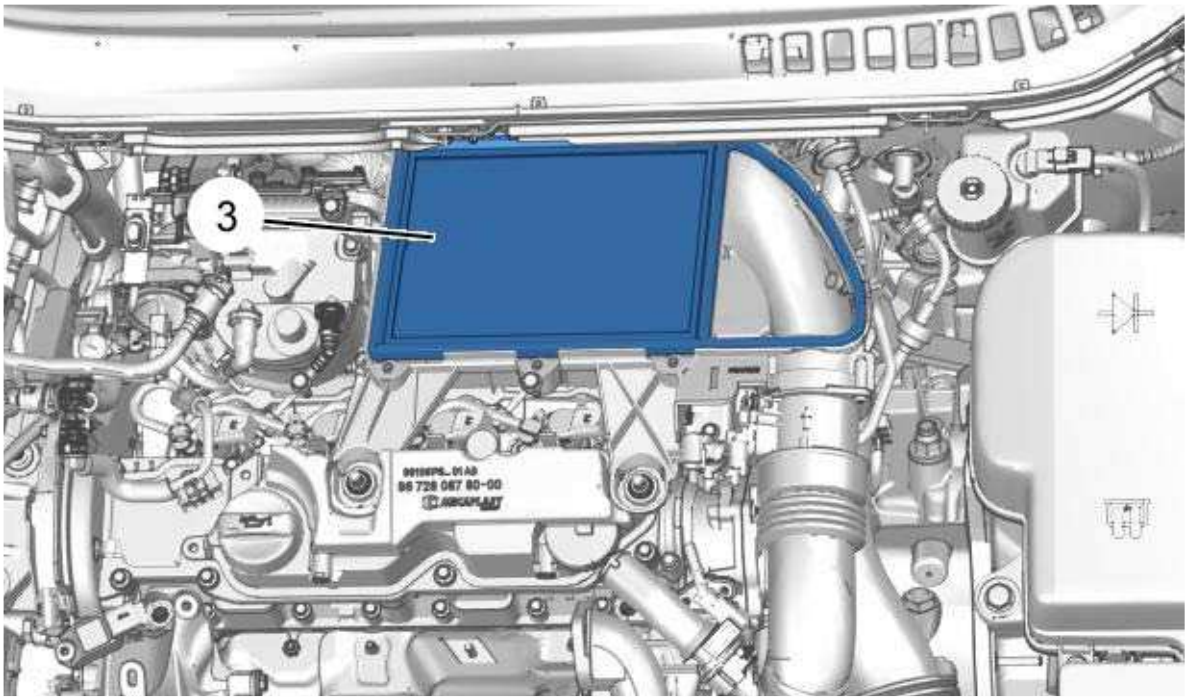

b1hg3ttd

Remove the air cleaner (3).

1 - 2 - Refitting

Refit :

- The air cleaner (3)
- The air filter cover (1)
- The 3 bolts (2)
- The retention clip (at "a")
- The engine cover

2 - AIR FILTER UNIT

2 - 1 - Removing

Disconnect the ancillaries battery.

Remove the engine style cover .

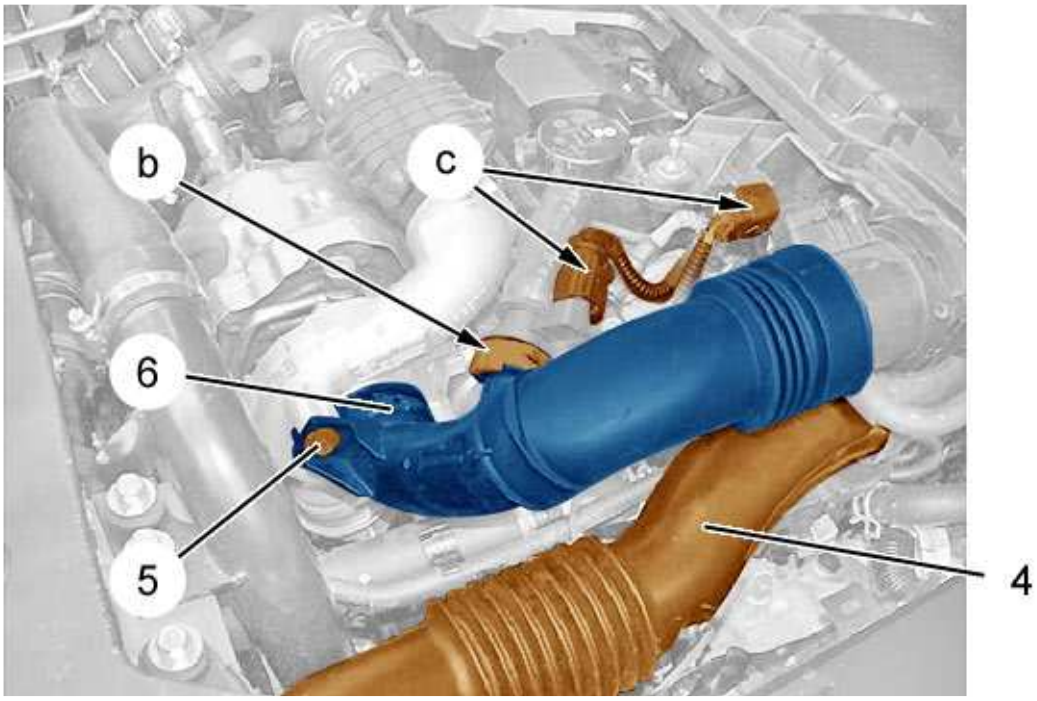

b1hg3tud

Remove the induction air pipe (4).

Uncouple the pipe (at "b").

Disconnect the connectors (at "c").

Remove :

- The (5) bolt
- The air duct (6)

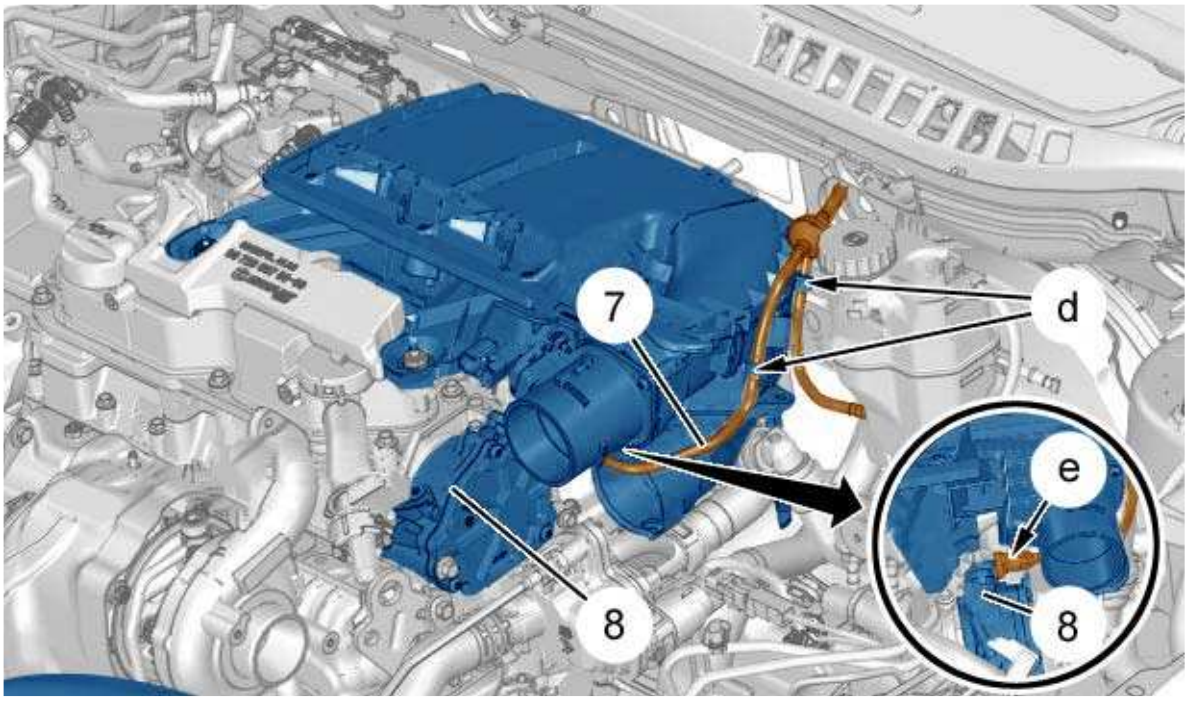

b1hg3tvd

WARNING : Uncouple and unclip the vacuum pipe (7) from the vacuum pump (8) (at "d", "e") (There is a risk of the end piece breaking)

Uncouple and unclip the vacuum pipe (7) from the vacuum pump (8) (at "e").

Unclip and move aside : The vacuum pipe (7) (at "d").

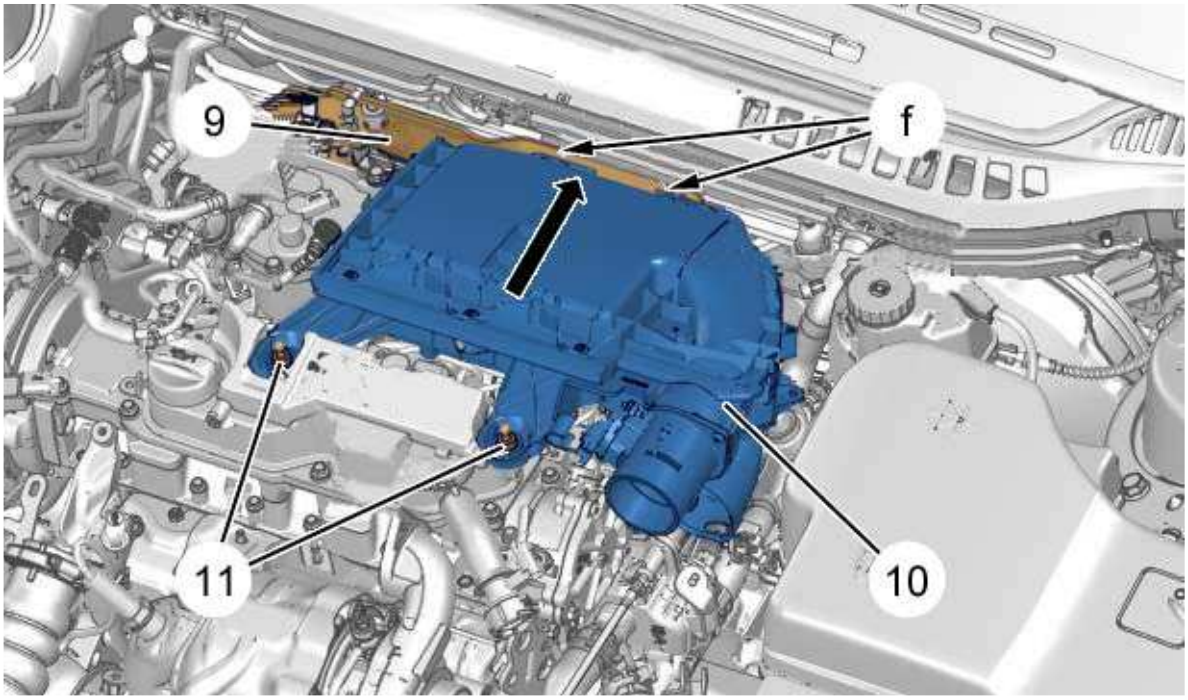

b1hg3twd

Release : The acoustic shield (9) (at "f").

Remove the mountings (11) (Recover the rubber bushes).

Unclamp and move aside (following the arrow) ; Remove the air flow sensor and air filter housing assembly (10) (Recover the rubber bushes).

2 - 2 - Refitting

> **WARNING :** Adhere to the tightening torques

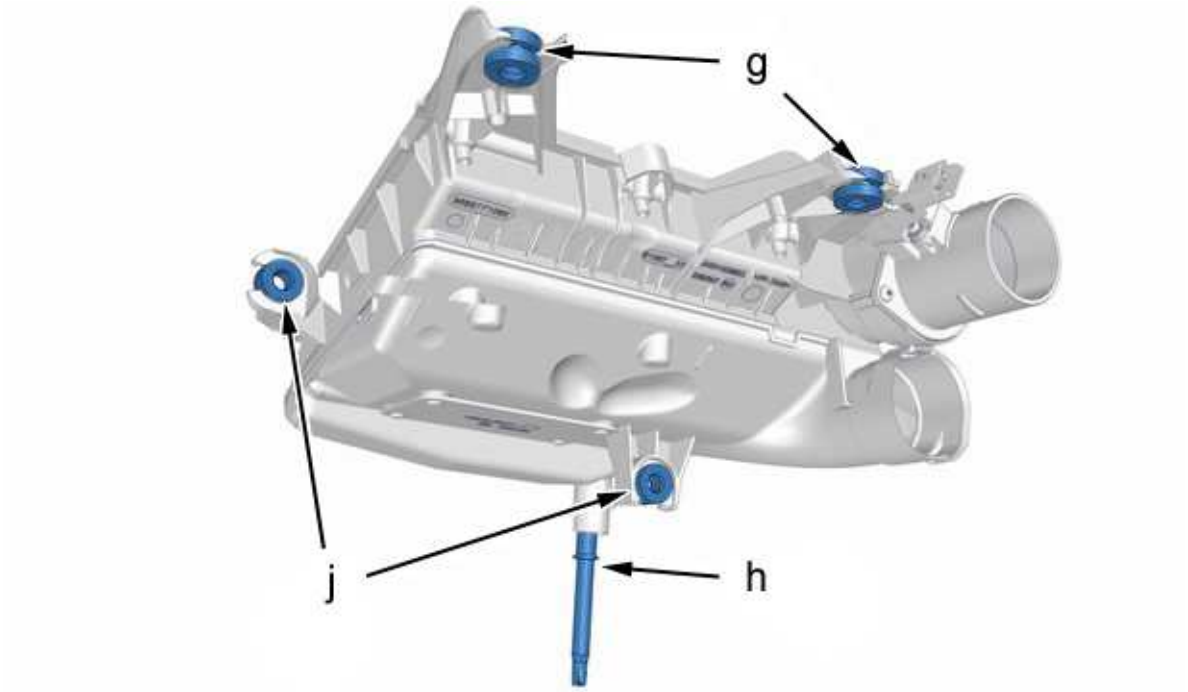

b1hg20od

> **WARNING :** Before refitting : Check that the rubber bushes are present (at "g", "j") ; Check that the pipe is present (at "h")

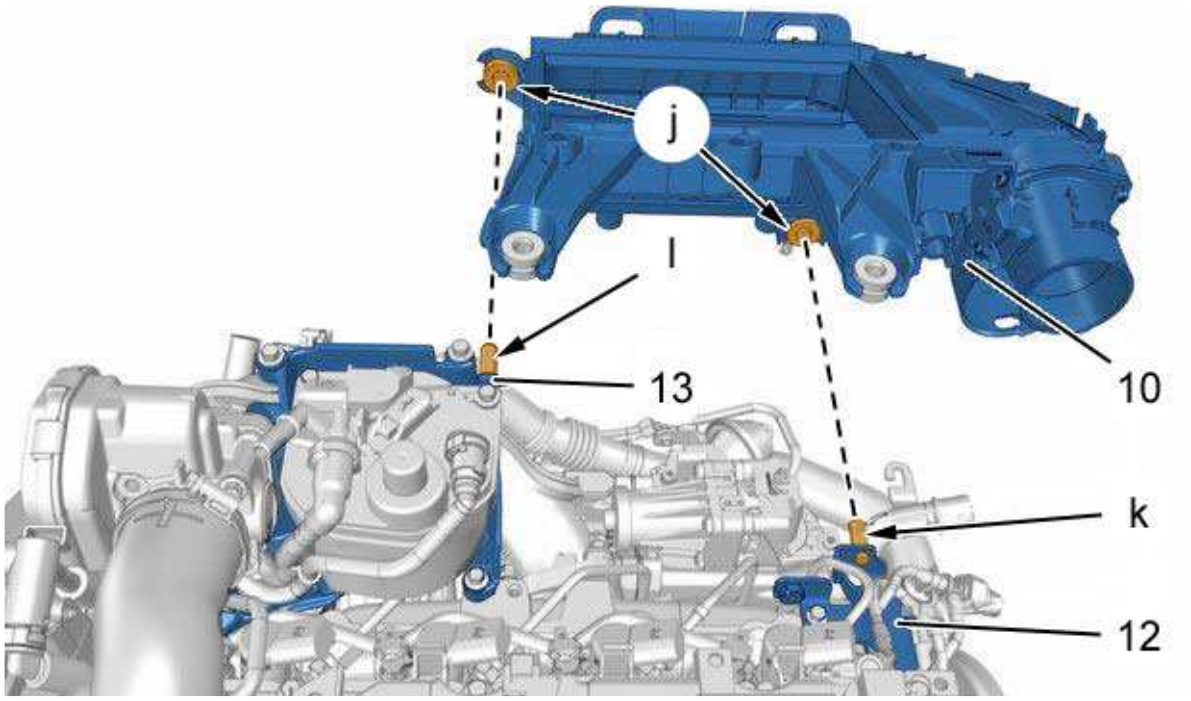

b1hg3txd

Reposition the air flow sensor and air filter housing assembly (10) (at "j") on the supports (12), (13) (at "k", "l").

Refit :

- The air flow sensor and air filter housing assembly (10)
- The mountings (11)
- The acoustic shield (9)
- The vacuum pipe (7)
- The air duct (6)
- The (5) bolt

Connect the connectors (at "b", "c").

Connect the hose (at "b").

Refit :

- The air inlet duct (4)
- The engine cover

> **WARNING :** Perform the operations that are required following a reconnection of the ancillaries battery

Reconnect the ancillaries battery.

CLEANING : UNIONS ON THE FUEL HIGH PRESSURE COMMON INJECTION RAIL (HDI) (ASSEMBLY SIEMENS)

ESSENTIAL : Observe the safety and cleanliness recommendations

1 - TOOLING

Equipment :

- Degreasing product SODIMAC N°35
- Cleaning tray
- Brush
- Vacuum extractor
- Round end-piece

2 - PRELIMINARY OPERATIONS

ESSENTIAL : Respect the safety and cleanliness recommendations that are specific to high pressure diesel injection (HDi) engines

Disconnect the battery.

Remove the air cleaner unit .

3 - METHOD OF OPERATION

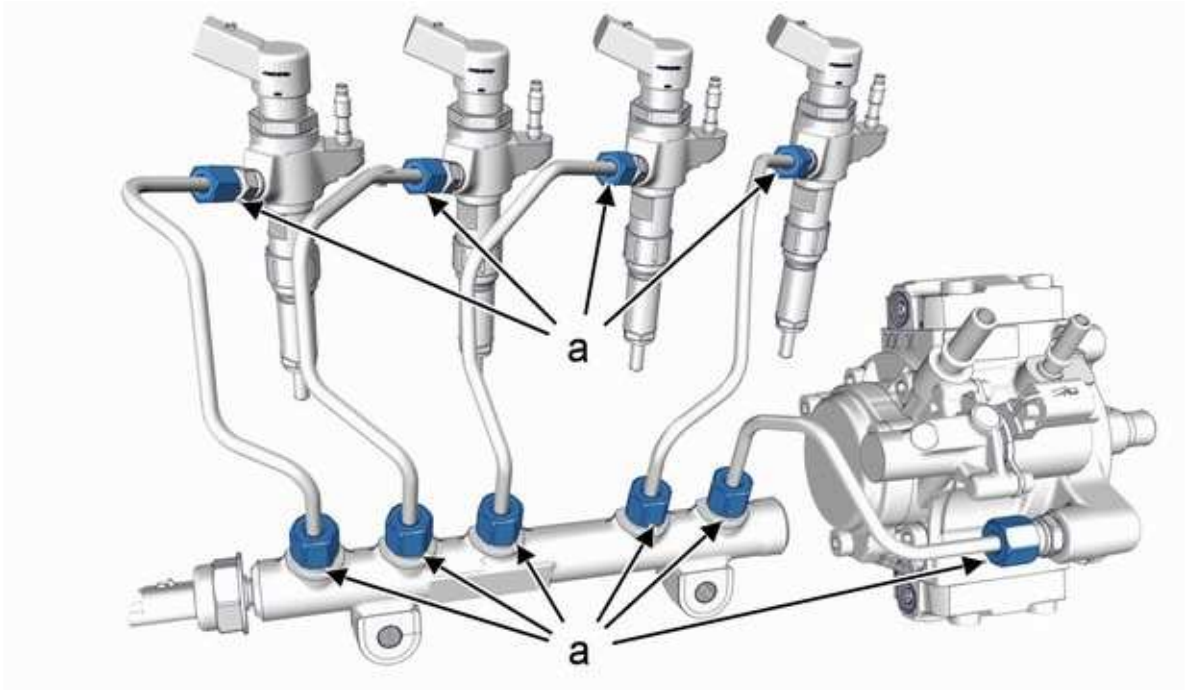

b1bk3xld

Clean the repair areas (at "a") :

- Pour the degreasing product into the cleaning tray
- Dip the brush in the degreasing product
- Clean the points "a" using the product and draw up simultaneously using suction equipment

Clean the vacuum cleaner and the round adaptor after use.

Refit the air cleaner unit .

> **WARNING :** Perform the operations to be carried out following reconnection of the battery

Reconnect the battery.

REMOVING - REFITTING : DISCHARGE (BY-PASS) CIRCUIT CONTROL ELECTROVALVE OF THE EXHAUST GAS RECIRCULATION HEAT EXCHANGER

ESSENTIAL : Observe the safety and cleanliness recommendations

1 - LOCATION

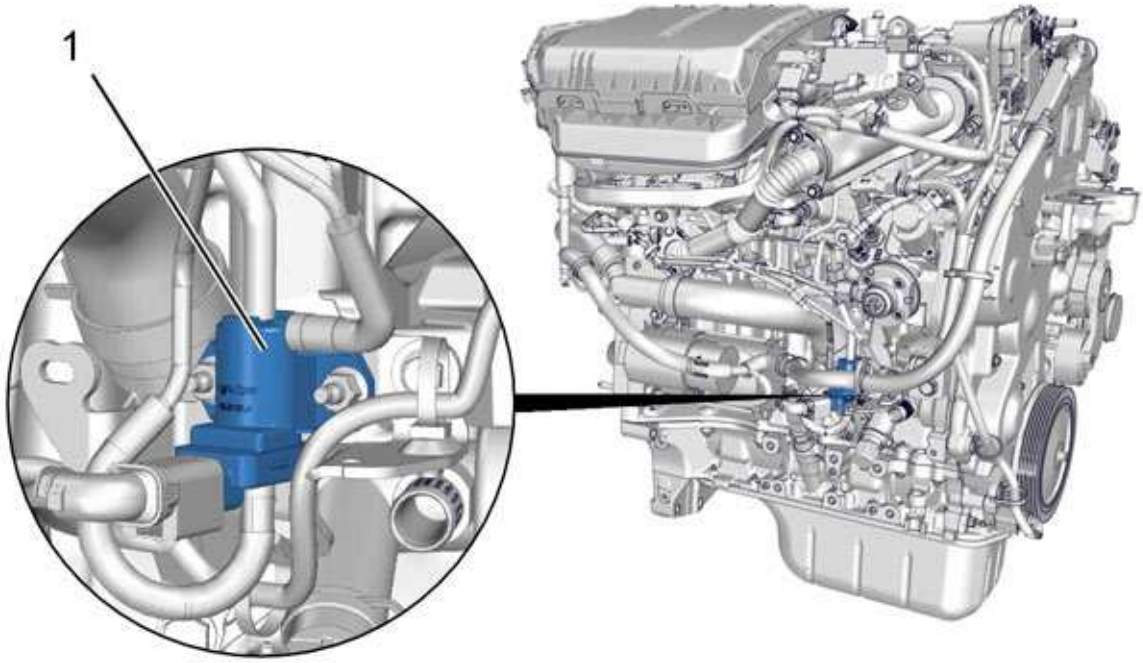

b1jg090d

(1) Discharge (by-pass) circuit control electrovalve of the exhaust gas recirculation heat exchanger.

2 - REMOVING

Disconnect the ancillaries battery.

Lift and support the vehicle.

Remove the under engine protection (According to equipment).

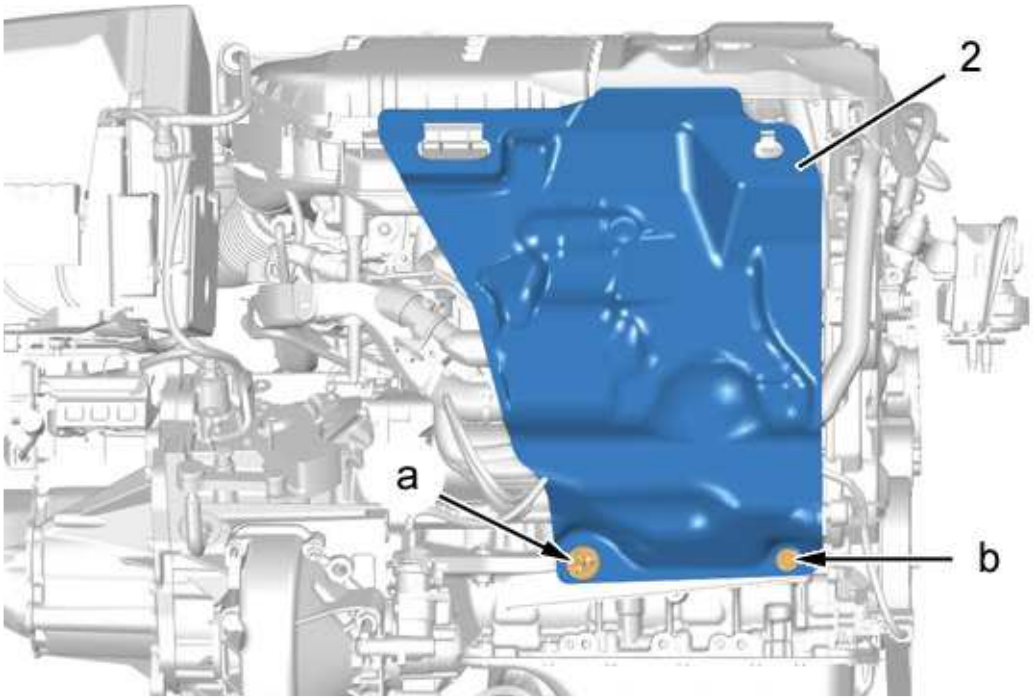

b1jg091d

Release the clips (at "a", "b").

Remove the acoustic shield (2) (Upwards).

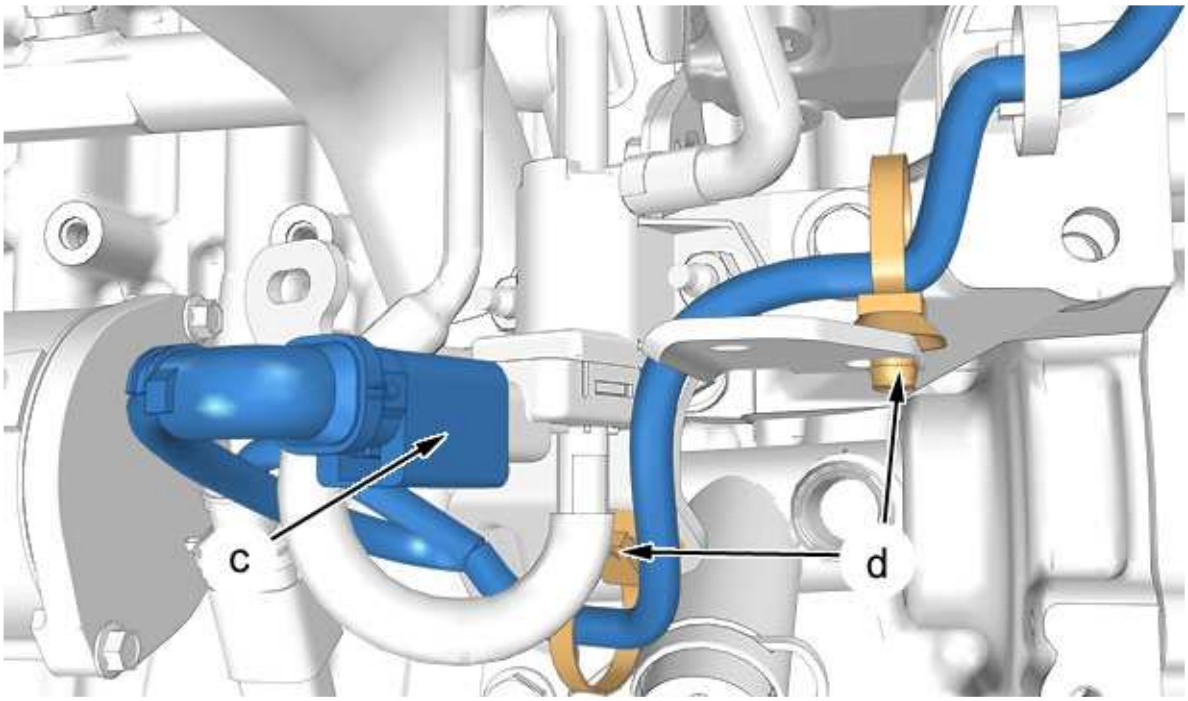

b1jg0tad

Release and move aside the electrical harness (at "d") (according to equipment).

Disconnect the connector (at "c").

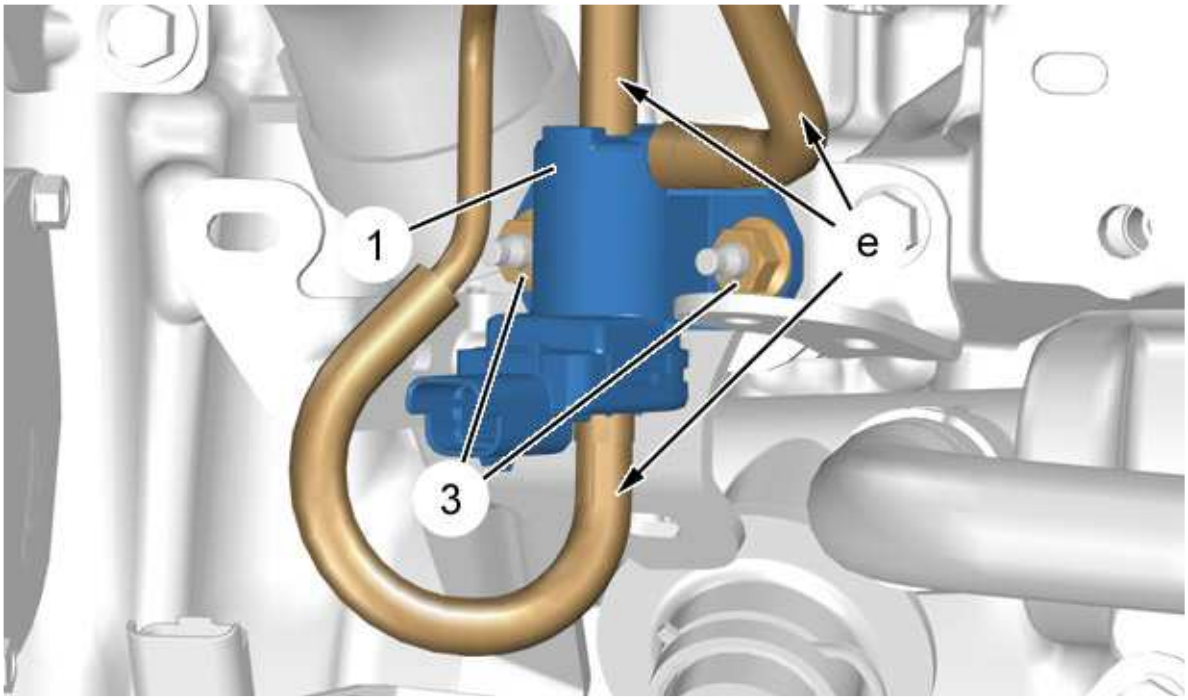

b1jg0tbd

Remove the 2 nuts (3).

Detach the discharge (by-pass) circuit control electrovalve (1) of the exhaust gas recirculation heat exchanger.

> **WARNING :** On each removal : Mark the direction of the vacuum pipes

Uncouple the vacuum pipes (at "e").

Remove the discharge (by-pass) circuit control electrovalve (1) of the exhaust gas recirculation heat exchanger.

3 - REFITTING

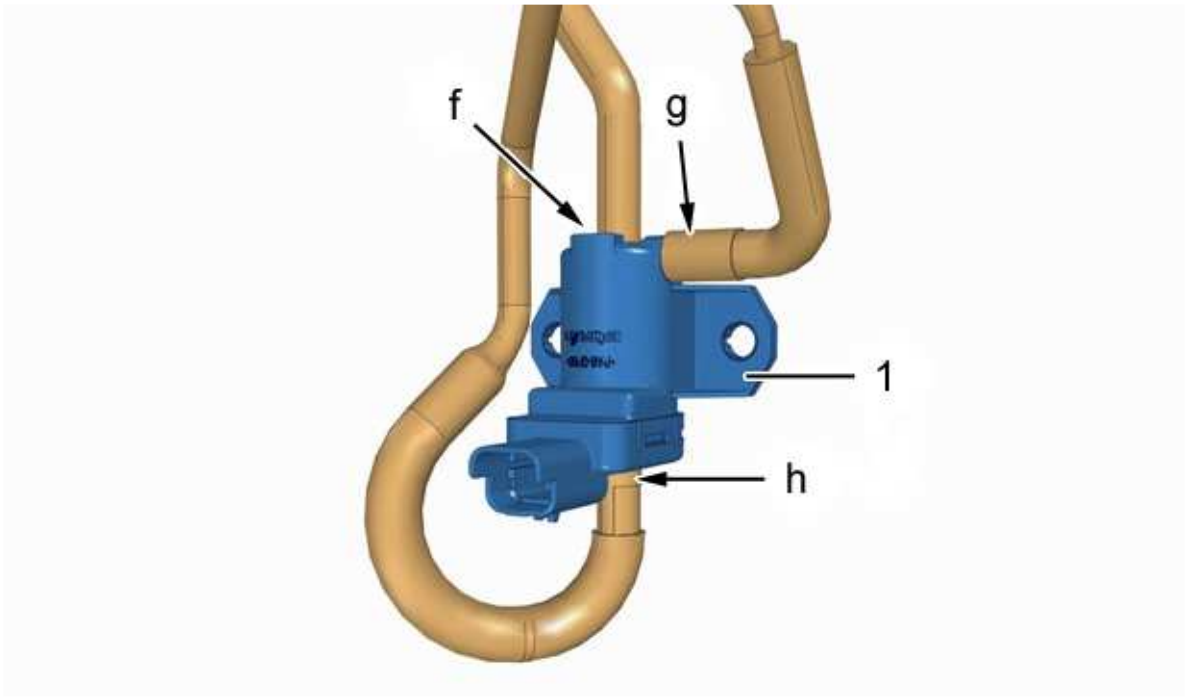

b1jg099d

> **WARNING :** When refitting : Do not reverse the vacuum pipes

Couple up the vacuum pipes (at "e") :

- Sleeve "f" without marking : Vacuum inlet
- Sleeve "g" with marking : Exhaust gas recycling module
- Sleeve "h" with marking : breather

Refit :

- The discharge (by-pass) circuit control electrovalve (1) of the exhaust gas recirculation heat exchanger
- The 2 nuts (3)

Connect the connector (at "c").

Clip the electrical harness (at "d") (according to equipment).

Refit :

- The acoustic shield (2)
- The mountings (at "a", "b")
- The protective panel under the engine (According to equipment)

> **WARNING :** Perform the operations that are required following a reconnection of the ancillaries battery

Reconnect the ancillaries battery.

REMOVING - REFITTING : EXHAUST MANIFOLD

ESSENTIAL : Observe the safety and cleanliness recommendations

1 - PARTS WHICH MUST ALWAYS BE REPLACED

Designation	Quantity
Exhaust manifold fixing nuts	10
The exhaust manifold gasket	1

2 - REMOVING

Disconnect the ancillaries battery.

Remove :

- The engine style cover (according to equipment)
- The particle filter/catalytic converter assembly
- The turbocharger

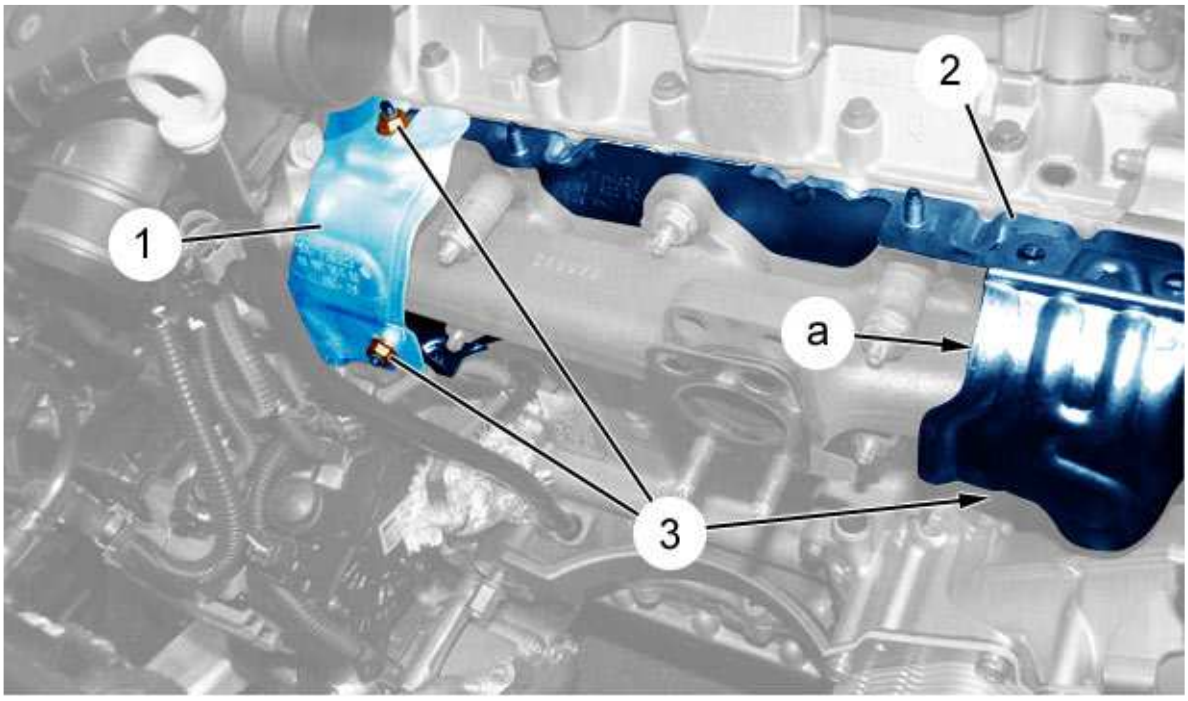

b1jg04jd

Remove :

- The dipstick guide
- The mounting nuts (3)
- The heat shield (1)

Pull away the heat shield (2) (at "a").

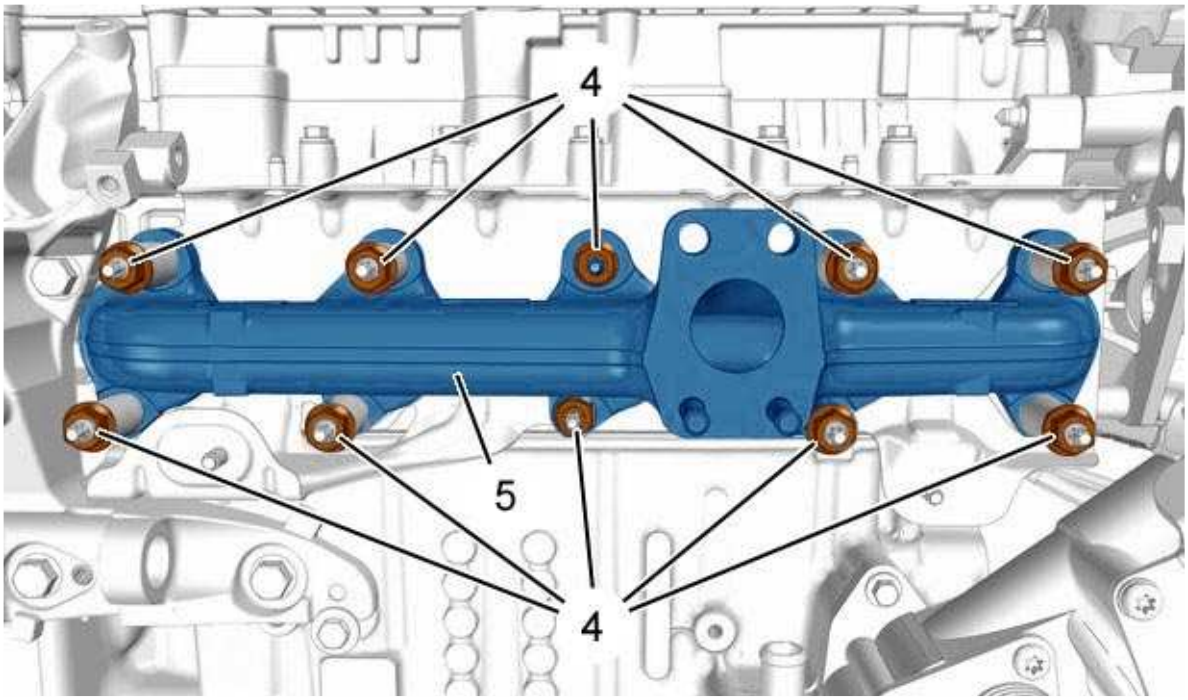

b1jg08td

Remove :

- The fixing nuts (4) of the exhaust manifold (5)
- The 8 spacers
- The exhaust manifold (5)

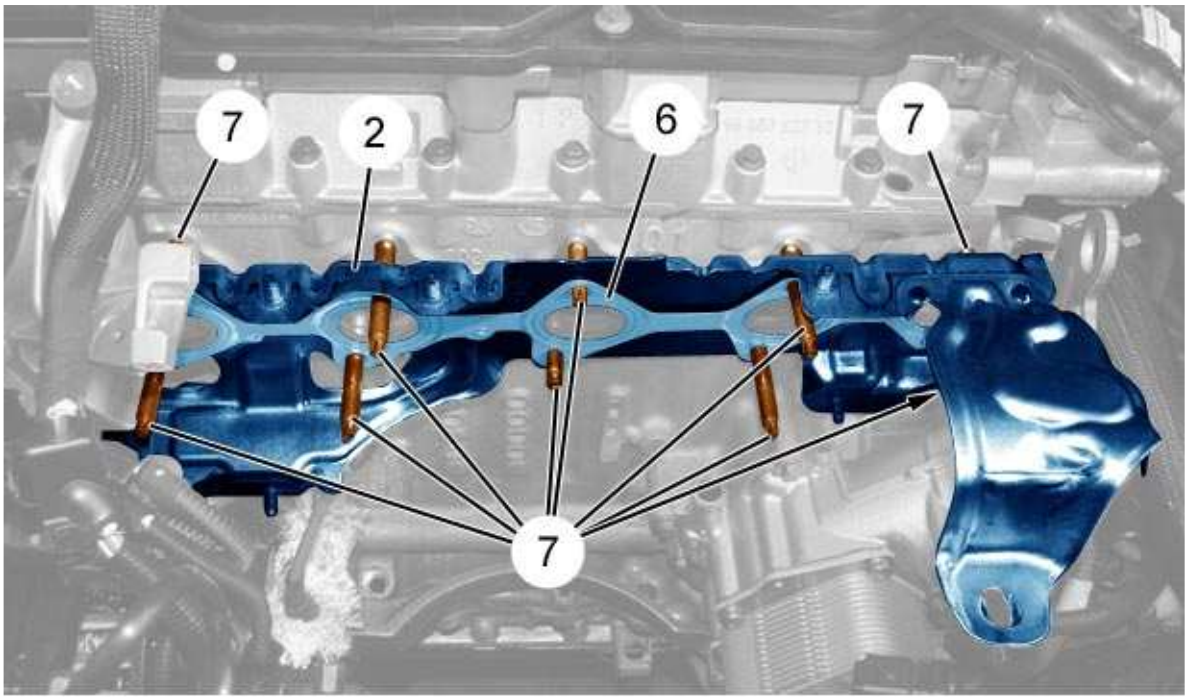

b1jg04ld

NOTE : The exhaust manifold seal (6) is solid with the heat shield (2)

Remove :

- The 10 studs (7)
- The heat shield (2) (including the seal (6))

3 - REFITTING

> **WARNING :** Adhere to the tightening torques

> **WARNING :** Clean the sealing faces with the approved product ; Do not use a cutting or abrasive tool ; The seal faces should not show any traces of impacts or scratches

> **WARNING :** Always replace the 10 exhaust manifold (5) fixing nuts (4) and seal

Refit :

- The heat shield (2) (new)
- The 10 studs (7)
- The exhaust manifold (5)

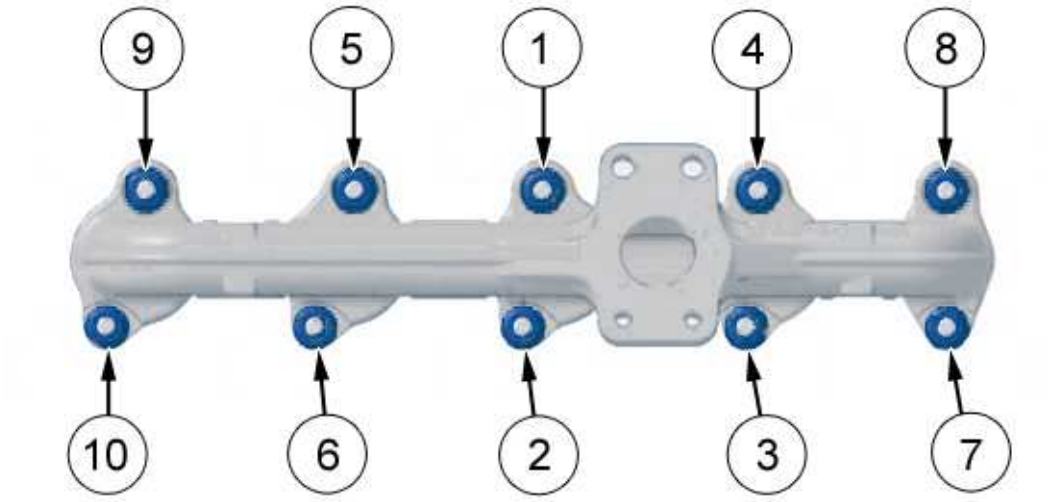

b1jp0a5d

Refit :

- The 8 spacers
- The 10 mounting nuts (4) (Tighten in the sequence indicated)
- The heat shield (1)
- The mounting nuts (3)

- The dipstick guide
- The turbocharger
- The particle filter/catalytic converter assembly
- The engine style cover (according to equipment)

> **WARNING :** Perform the operations that are required following a reconnection of the ancillaries battery

Reconnect the ancillaries battery.

REMOVING - REFITTING : EGR MODULE

ESSENTIAL : Observe the safety and cleanliness recommendations

1 - PARTS WHICH MUST ALWAYS BE REPLACED

Designation	Quantity
Seal (Exhaust gas recycling duct / Air inlet manifold)	1
Seal (Exhaust gas recycling duct / support)	1
Seal (Water outlet end piece / support)	1
Seal (Water outlet end piece / Coolant inlet manifold)	1
Seal (support / Cylinder head)	1

2 - TOOLING

tool	Reference	Designation
[0165-2]  *e5ai00ht*	[0165-2]	Pliers for removing elastic clips

3 - PRECAUTION

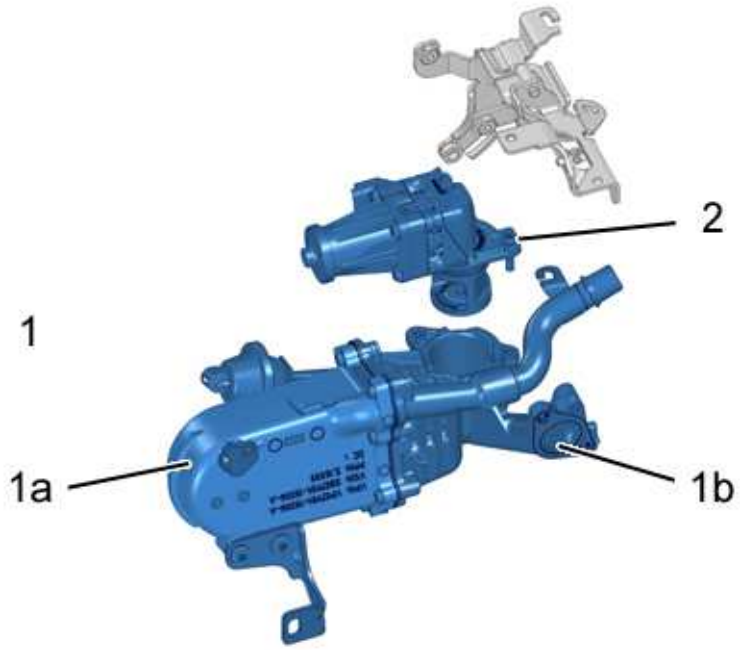

b1kg0ord

(1) EGR module assembly.

(1a) Heat exchanger.

(1b) support .

(2) Electrically-controlled exhaust gas recycling valve.

> **WARNING :** Do not separate the heat exchanger (1a) from the support (1b)

NOTE : The exhaust gas recycling module is assembled at the factory with the aid of a template. Assembling it without using a template would create positioning tensions on the cylinder head, adversely affecting the fixings and the sealings of the module

4 - REMOVING

Put the vehicle on a hoist.

Disconnect the ancillaries battery.

Remove :

- The engine cover (According to equipment)
- The air filter housing
- The protective panel under the engine (According to equipment)
- The exhaust front flexible pipe
- The ancillaries battery cover (According to equipment)
- The ancillaries battery

- The ancillaries battery tray (according to equipment)

Uncouple the vacuum pump unions and move them aside.

Remove the rear sound deadening screen from the engine and move it aside.

Drain the cooling system.

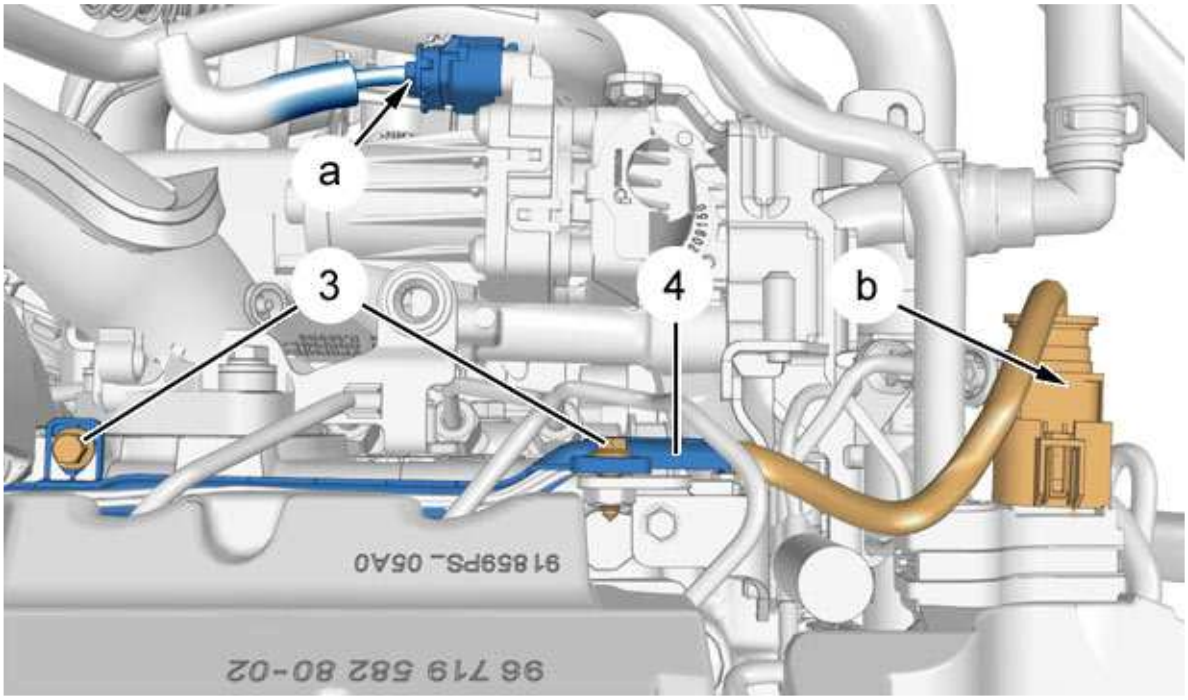

b1kg0osd

Disconnect the connectors (at "a", "b").

Remove the bolts (3).

Move aside the pre-heat plugs supply harness (4).

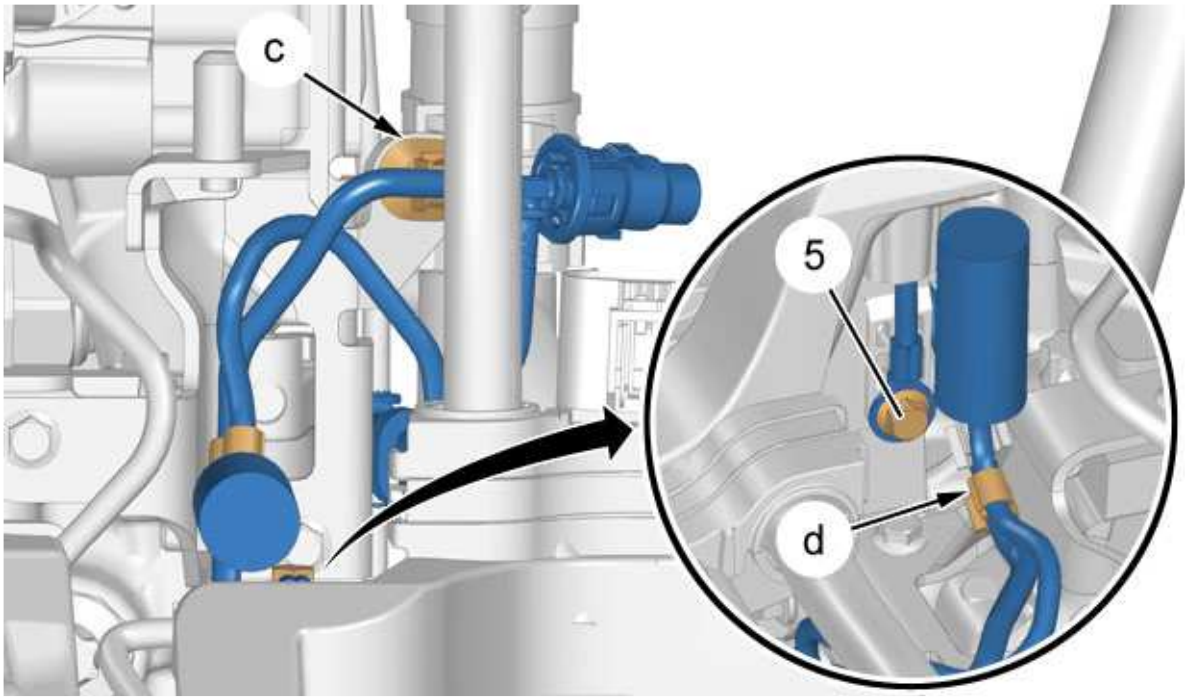

b1kg0otd

Unclip clip (at "c","d").

Remove the bolt (5).

Release :

- The electrical harness
- The vacuum circuit

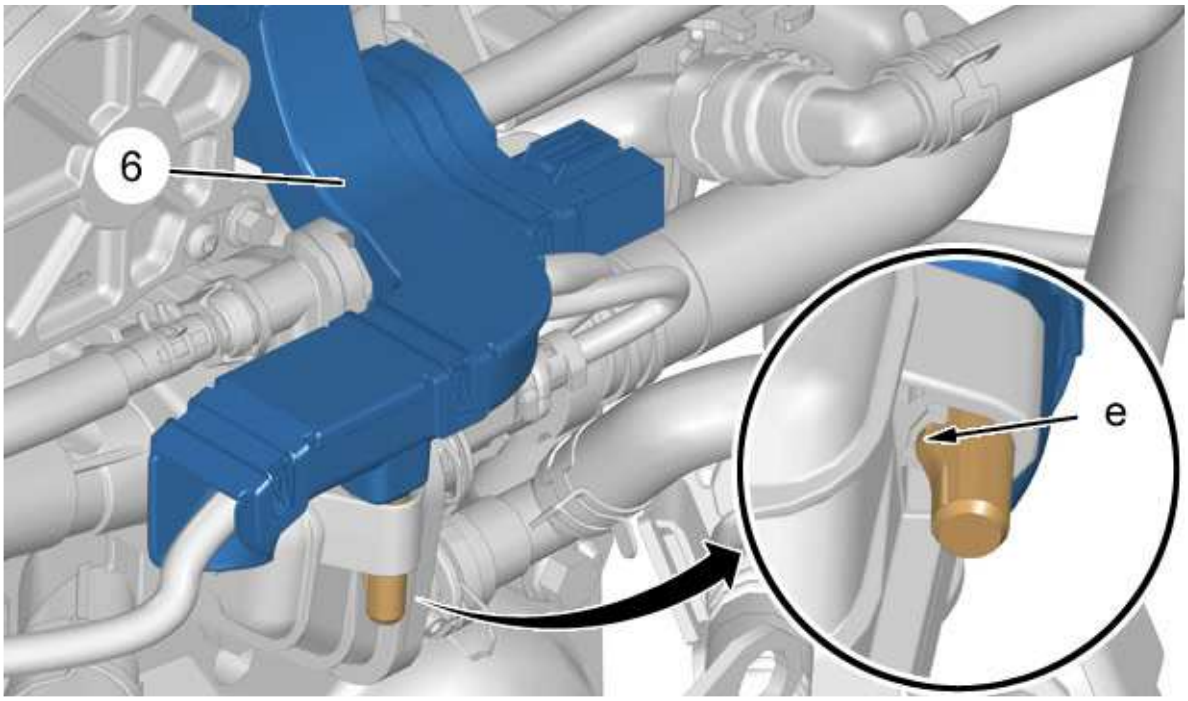

b1kg0oyd

Release the electrical harness sheathing (6) from underneath (at "e") ; Using a small flat screwdriver.

Lift and move aside the electrical harness sheathing (6).

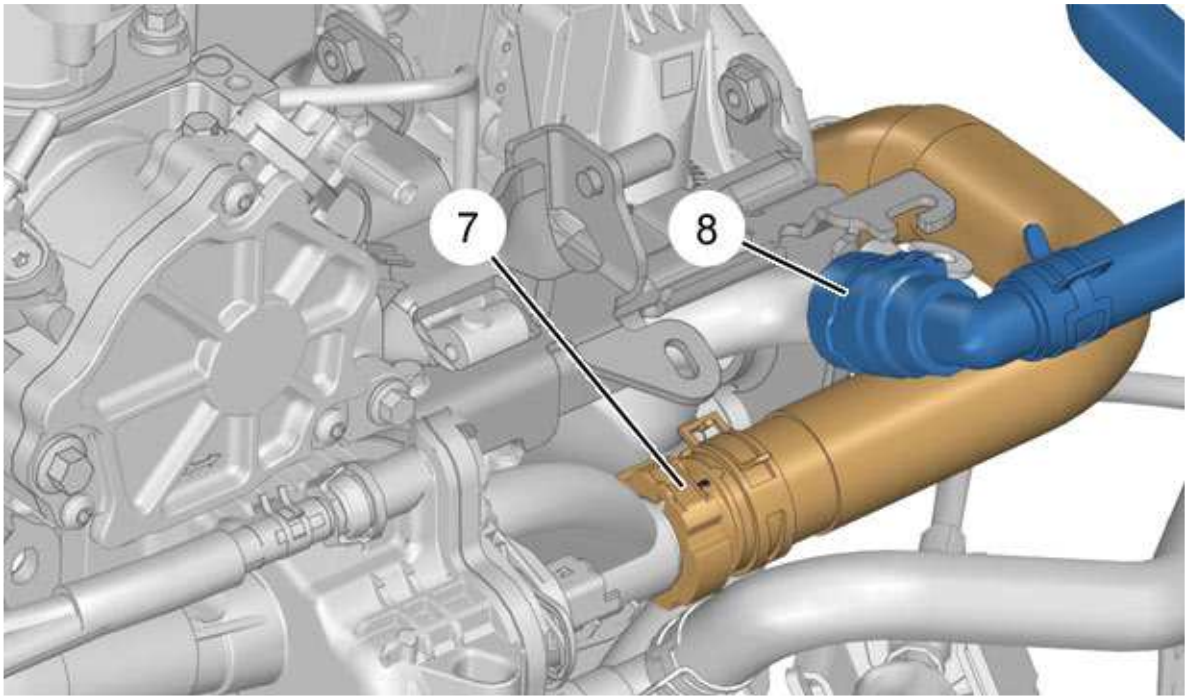

b1kg0ozd

Uncouple :

- The pipe (7)
- The pipe (8)

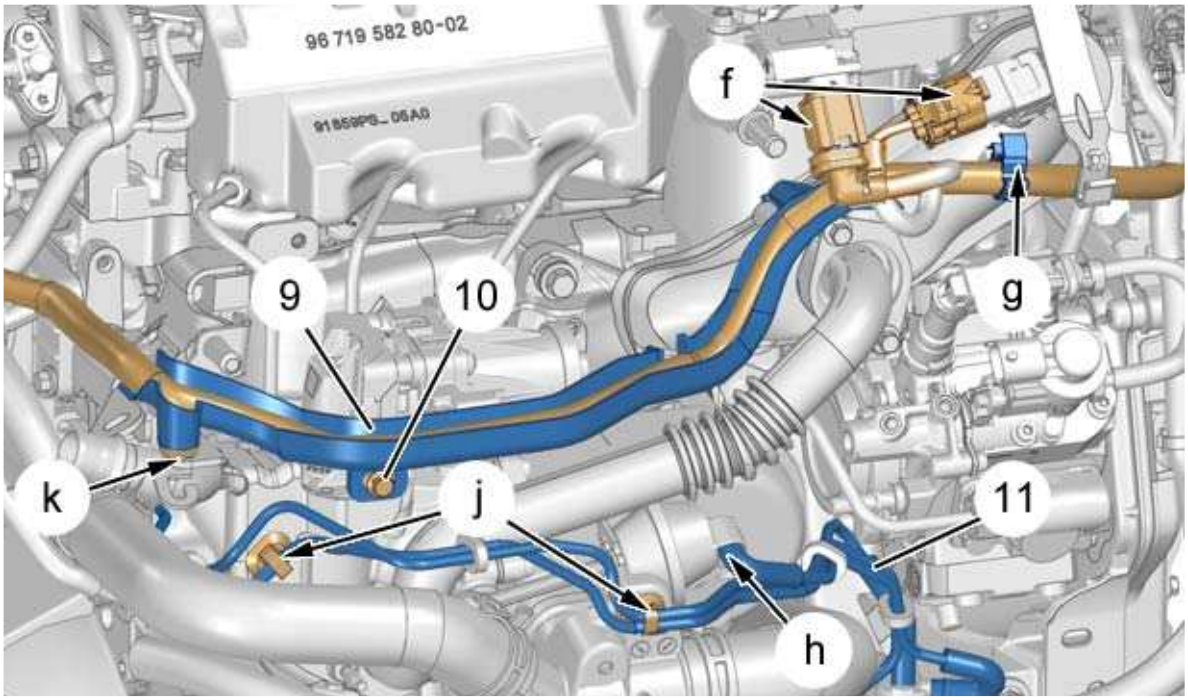

b1kg0p0d

Disconnect and unclip the connectors (at "f", "g").

Remove the bolt (10).

Unclip the electrical harness sheath (9) and move it aside (at "g", "k").

Unclip the vacuum circuit pipes (11) (at "j").

Uncouple and move aside the vacuum circuit pipes (11) (at "h").

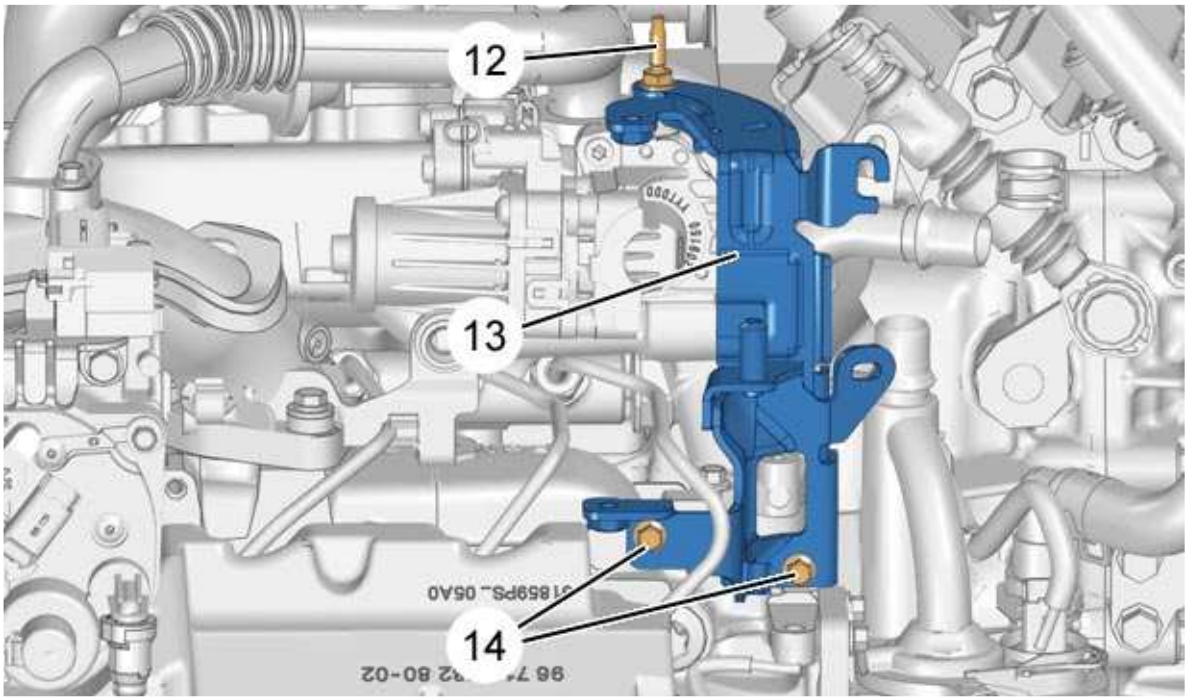

b1kg0p1d

Remove :

- The 2 bolts (14)
- The securing bolt (12)
- The air filter housing support (13)

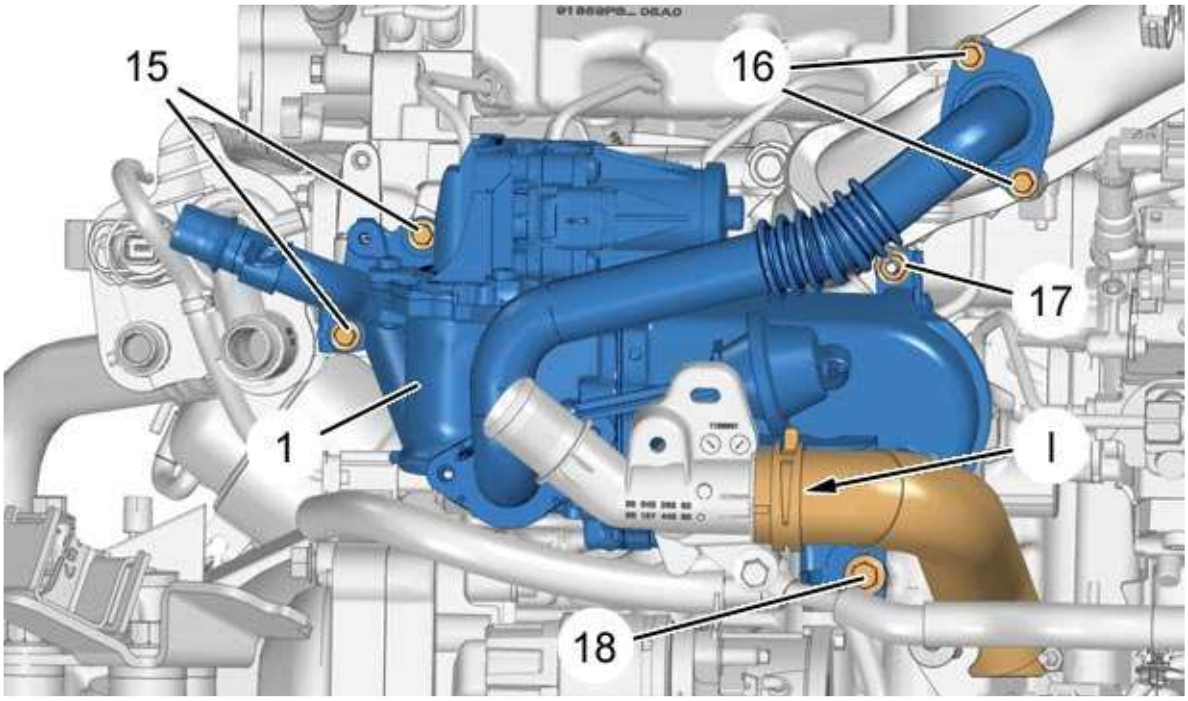

b1kg0p2d

Uncouple the pipe (at "I") ; Using tool [0165-2].

Remove :

- The nut (17)
- The screws (15), (16) and (18)
- The EGR module assembly (1) (Carefully)

Retrieve the seals .

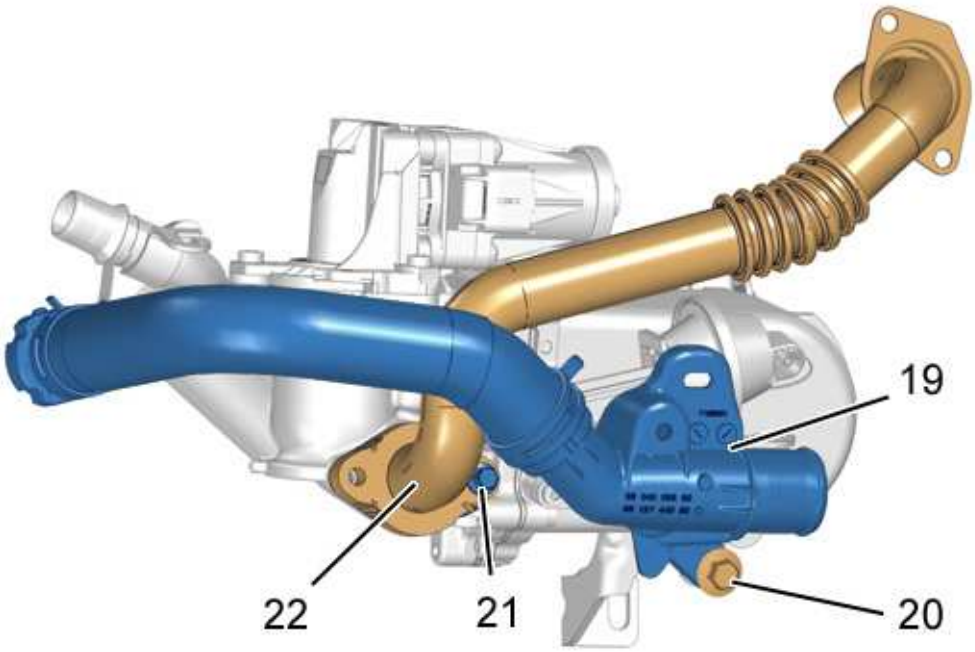

b1kg0p3d

Remove (On the bench) :

- The (20) bolt
- The coolant manifold (19)
- The (21) bolt
- The exhaust gas recycling pipe (22) (Retrieve the seals)

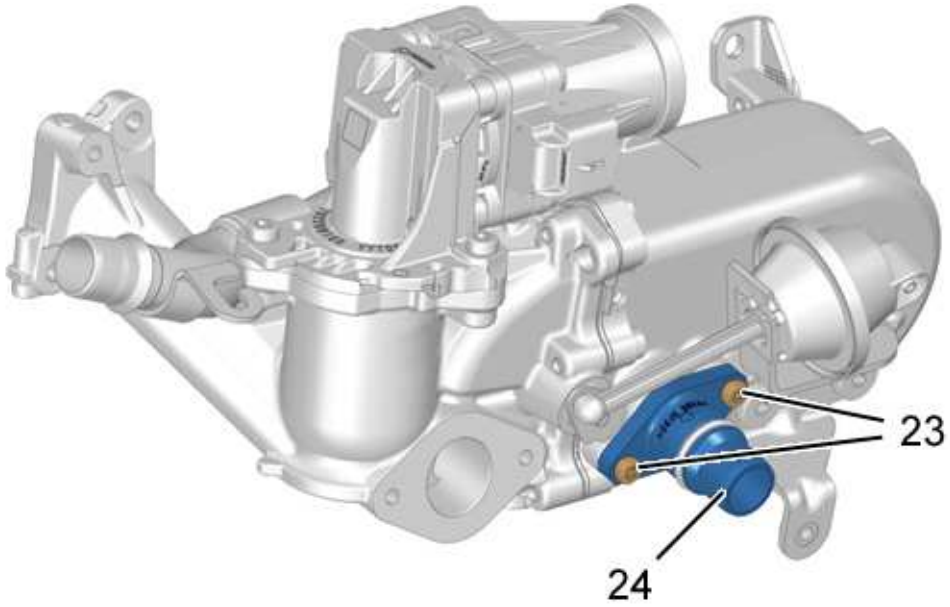

b1kg0p4d

Remove (On the bench) :

- The bolts (23)
- The water outlet (24) (recover the seals)

5 - REFITTING

5 - 1 - Preparation

NOTE : Clean the seal faces of the EGR module, using a special degreaser index "N1"

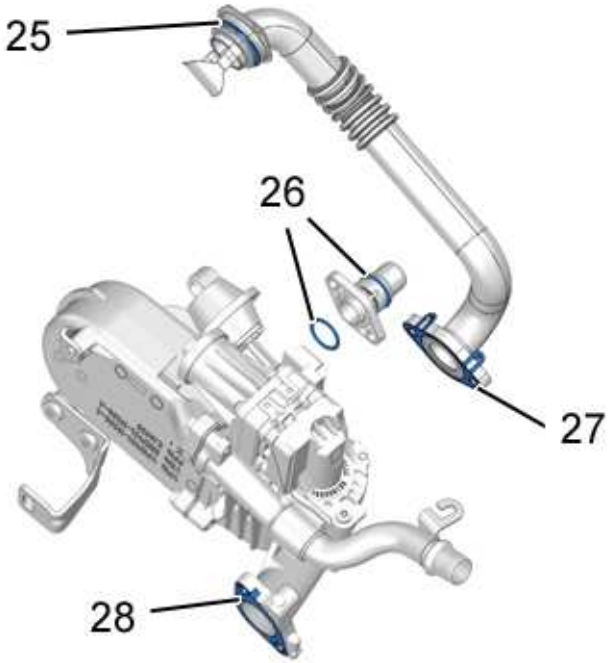

b1kg0p5d

WARNING : When positioning the seal faces (25), (28), pay particular attention to the retaining studs (risk of leaks)

Fit new seals (25), (26), (27), (28).

Lubricate the seals (26) ; With engine oil .

5 - 2 - Subsequent operations

WARNING : Adhere to the tightening torques

Refit (On the bench) :

- The water outlet (24)
- The bolts (23)
- The exhaust gas recycling pipe (22)

- The (21) bolt
- The coolant manifold (19)
- The (20) bolt

Refit :

- The EGR module assembly (1) (Carefully)
- The nut (17)
- The screws (15), (16) and (18)

Recouple the connection hose (at "l") ; Using tool [0165-2].

Refit bolt (17) (From below).

Refit :

- The air filter housing support (13)
- The securing bolt (12)
- The 2 bolts (14)

Clip the vacuum circuit (11) pipes (at "j").

Refit and connect the vacuum circuit (11) pipes (at "h").

Refit bolt (10).

Clip the electrical harness sheath (9) (at "k").

Connect and secure the connectors (at "f", "g").

Couple up :

- The pipe (8)
- The pipe (7)

Refit :

- The electrical harness sheathing (6) (at "e")
- The bolt (5)
- The pre-heat plugs supply harness (4)
- The bolts (5)

Clip the vacuum circuit (11) pipes (at "c","d").

Connect the connectors (at "a", "b").

Couple the vacuum pump unions.

Refit :

- The ancillaries battery tray (according to equipment)
- The ancillaries battery

- The ancillaries battery cover (According to equipment)
- The engine rear acoustic shield
- The exhaust front flexible pipe
- The air filter housing
- The engine cover (according to equipment)

Fill and bleed the cooling system.

> **WARNING :** Perform the operations that are required following a reconnection of the ancillaries battery

Reconnect the ancillaries battery.

6 - CHECKING

Start the engine.

Check that there are no leaks.

Refit the under-engine protection (According to equipment).

REMOVING - REFITTING : ELECTRICALLY-CONTROLLED EXHAUST GAS RECYCLING VALVE

ESSENTIAL : Observe the safety and cleanliness recommendations

1 - PARTS WHICH MUST ALWAYS BE REPLACED

Designation	Quantity
Electric exhaust gas recycling valve seal	1

2 - TOOLING

Equipment : Diagnostic tool.

3 - PRECAUTION

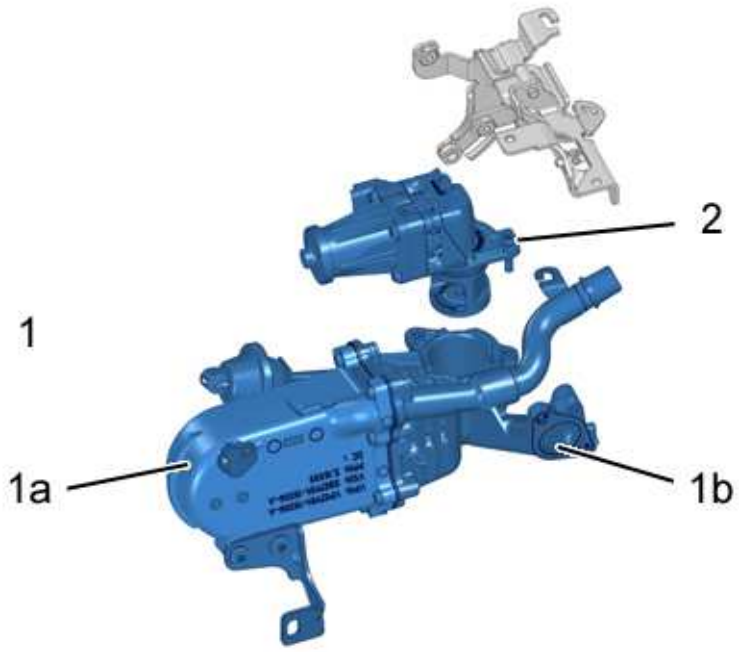

b1kg0ord

(1) EGR module .

(1a) heat exchanger.

(1b) support .

(2) Electrically-controlled exhaust gas recycling valve.

WARNING : Do not separate the heat exchanger (1a) from the support (1b)

NOTE : The EGR module (1) is assembled at the factory by means of a fitting gauge. Assembling without using a gauge would cause problems with the positioning on the cylinder head, adversely affecting the fixings and therefore the sealing of the EGR module (1)

4 - REMOVING

Disconnect the ancillaries battery.

Move aside the assembly of support and engine ECU .

Remove :

- The engine style cover (according to equipment)
- The air filter housing
- The ancillaries battery
- The ancillaries battery tray (according to equipment)

Disconnect the vacuum pipe from the vacuum pump.

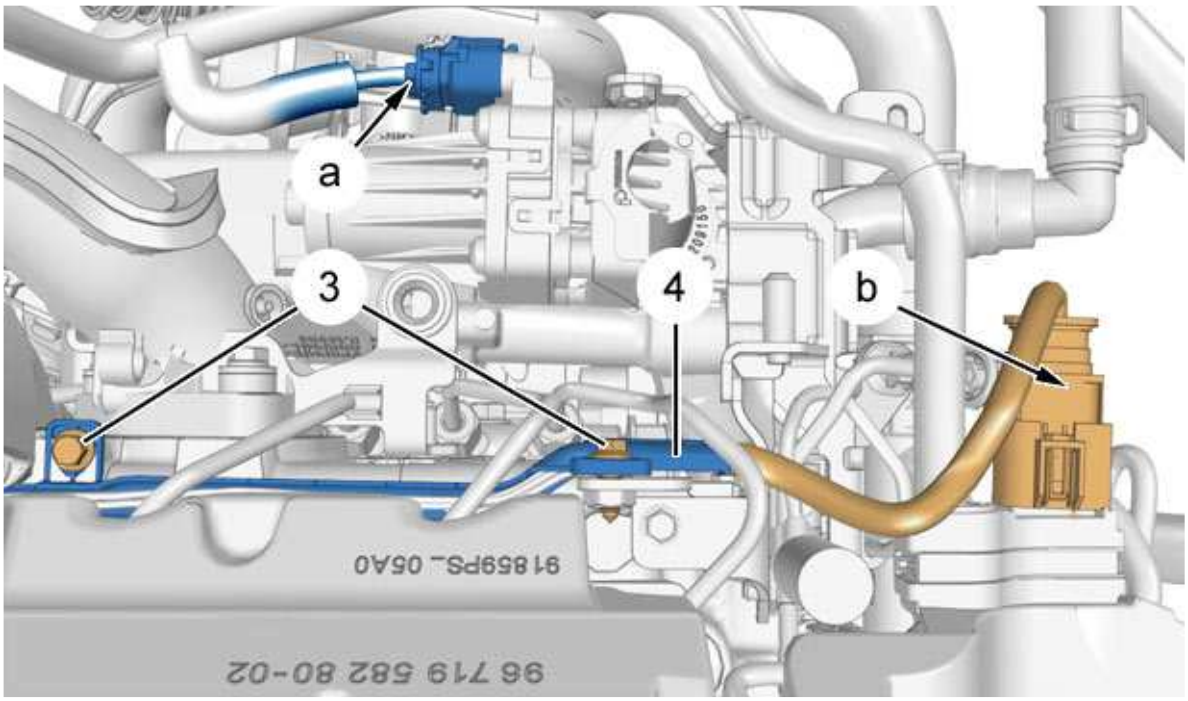

b1kg0osd

Disconnect the connectors (at "a", "b").

Remove the bolts (3).

Move aside the electrical harness (4).

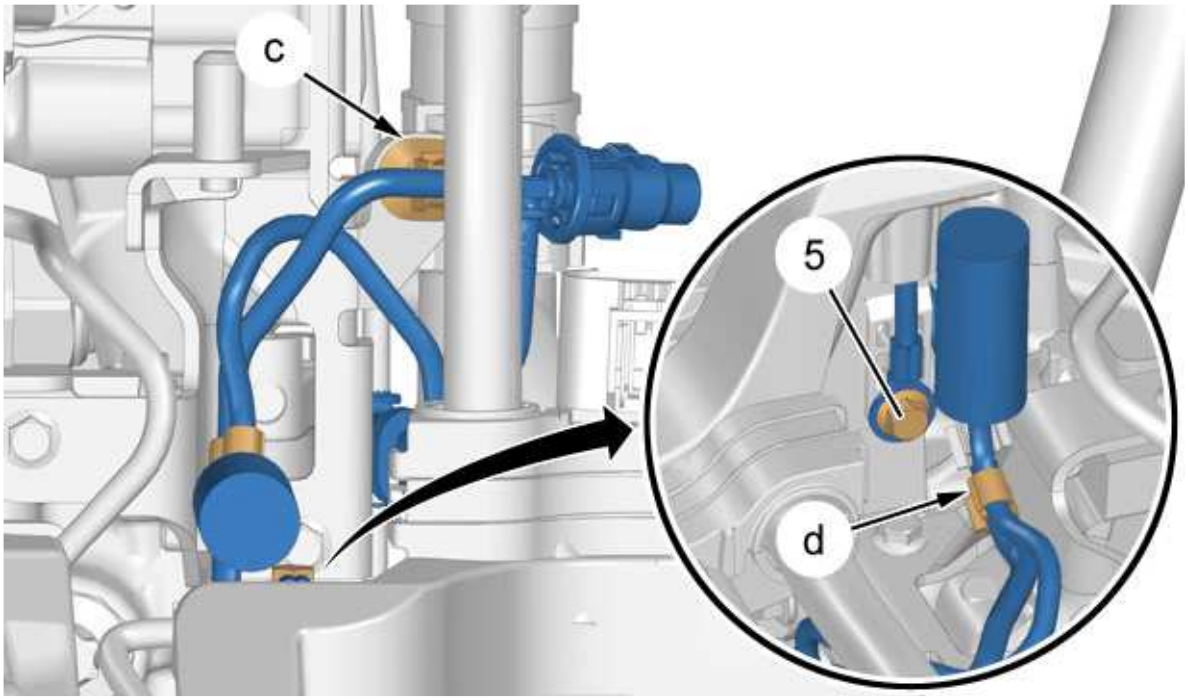

b1kg0otd

Unclip clip (at "c","d").

Remove the bolt (5).

Release :

- The vacuum circuit
- The electrical harness

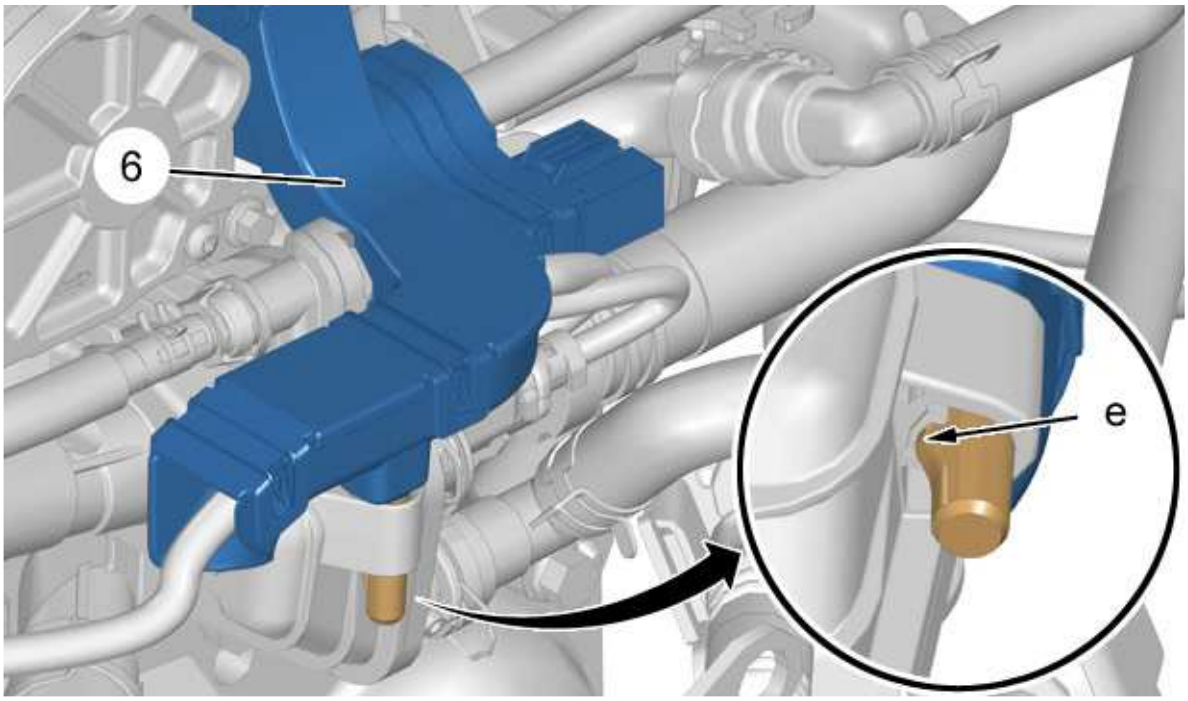

b1kg0oyd

Release the electrical harness sheathing (6) from underneath (at "e") ; Using a small flat screwdriver.

Lift and move aside the electrical harness sheathing (6).

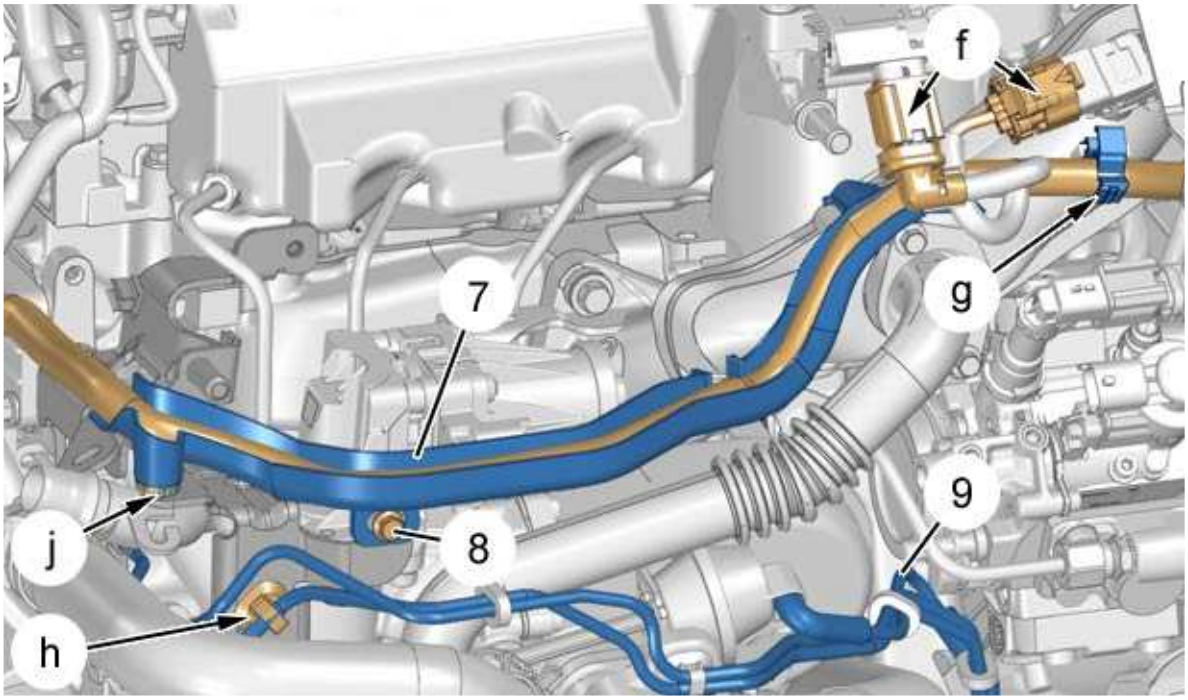

b1kg0p7d

Disconnect and unclip the connectors (at "f").

Remove the bolt (8).

Unclip the electrical harness sheath (7) and move it aside (at "g", "j").

Unclip the vacuum circuit pipes (9) (at "h").

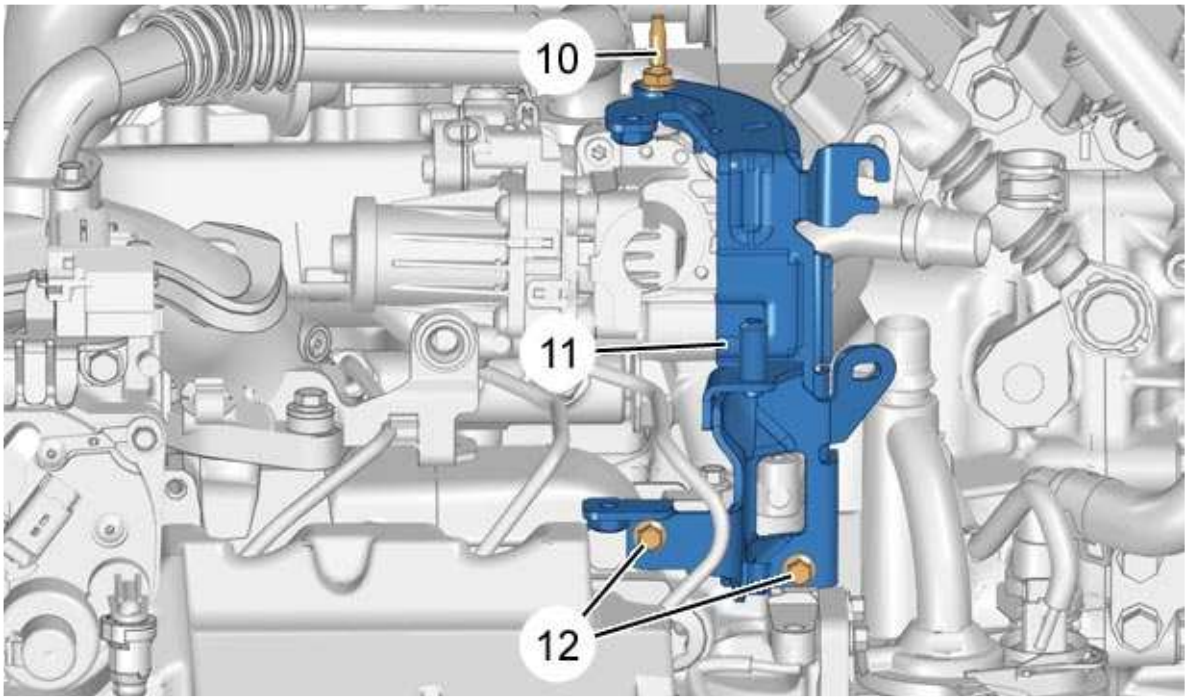

b1kg0p8d

Remove :

- The 2 bolts (12)
- The securing bolt (10)
- The air filter housing support (11)

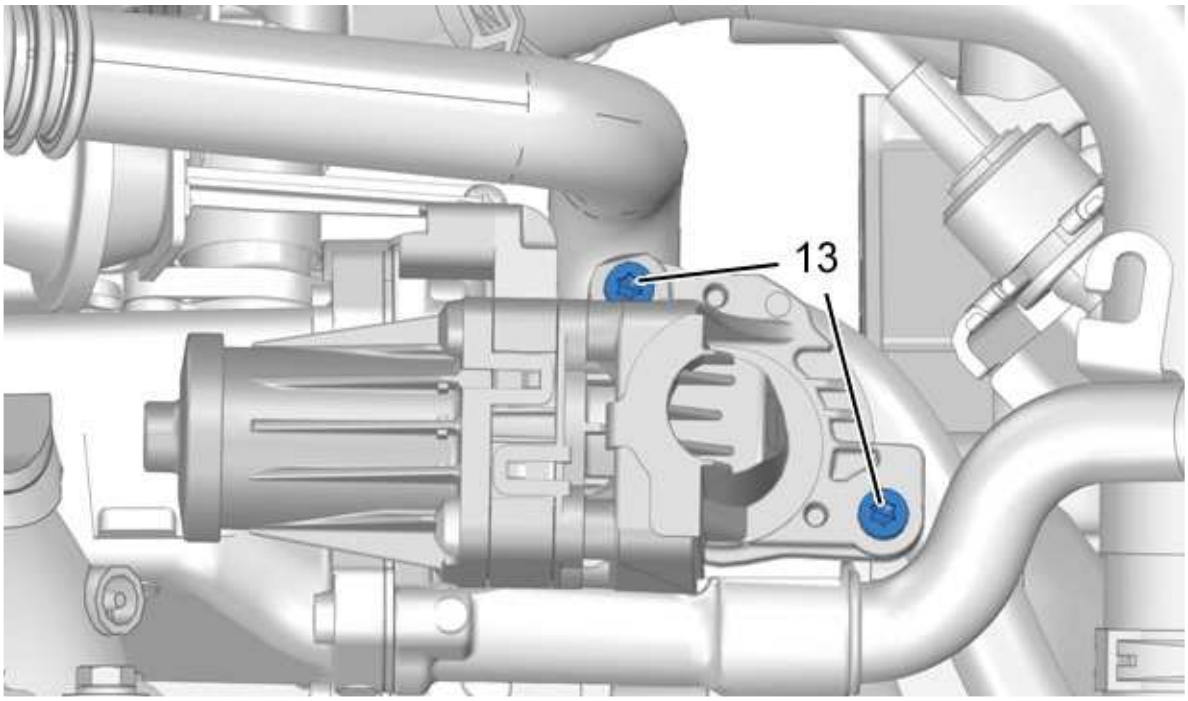

b1kg0p9d

Remove the bolts (3).

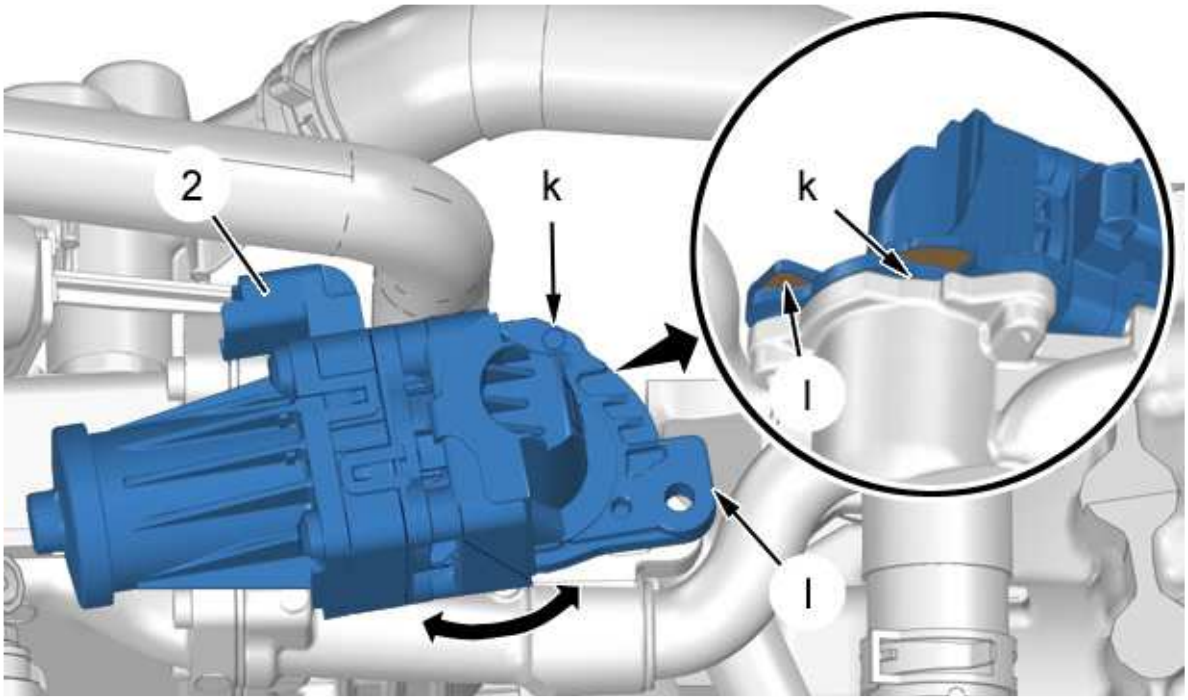

b1kg0pad

WARNING : Do not use a cutting or abrasive tool ; The seal faces should not show any traces of impacts or scratches

Carry out several rotations of the electrically-controlled exhaust gas recycling valve (2).

Lever with a screwdriver (at "k","l").

Remove the electric EGR valve (2).

5 - REFITTING

WARNING : Adhere to the tightening torques

ESSENTIAL : Respect the safety and cleanliness recommendations that are specific to high pressure diesel injection (HDi) engines

WARNING : Clean the gasket faces with an approved descaling product ; Do not use a cutting or abrasive tool ; The seal faces should not show any traces of impacts or scratches

WARNING : On refitting, all removed seals must be replaced with new seals

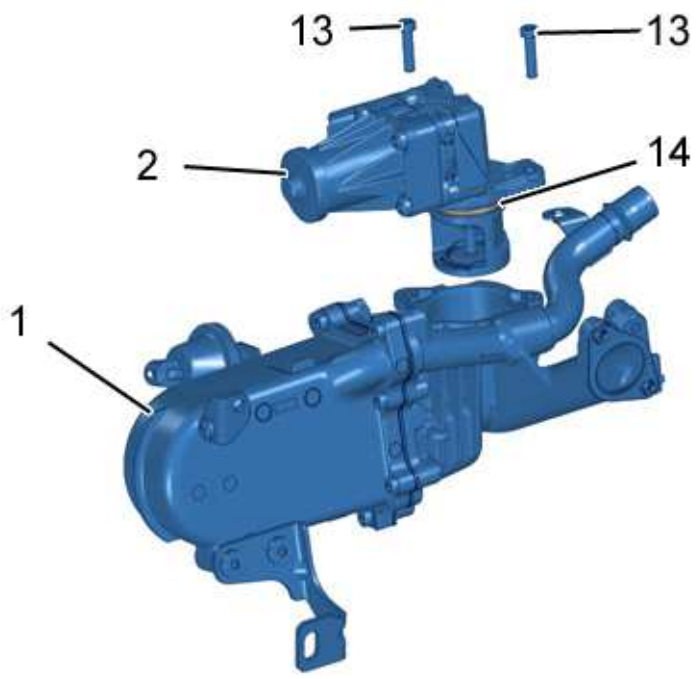

b1kg0pbd

WARNING : Replace the seal (14)

Refit :

- The electric EGR valve (2)
- The bolts (13)
- The air filter housing support (11)
- The securing bolt (10)
- The 2 bolts (12)

Clip the vacuum circuit pipes (9) (at "h").

Clip the electrical harness sheath (7) (at "g" and "j").

Refit bolt (8).

Connect the connectors (at "f").

Refit the electrical harness sheathing (6) (at "e").

Refit :

- The electrical harness
- The bolt (5)
- The vacuum circuit ; Fasten the clips (at "c","d")
- The electrical harness (4)
- The bolts (3)

Connect the connectors (at "a", "b").

Reconnect the vacuum pipe of the vacuum pump .

Refit :

- The air filter housing
- The ancillaries battery tray (according to equipment)
- The ancillaries battery
- The engine style cover (according to equipment)
- The assembly of support and engine ECU

> **WARNING :** Perform the operations that are required following a reconnection of the ancillaries battery

Reconnect the ancillaries battery.

Initialise the electric EGR valve (2) ; Using the diagnostic equipment.

TIGHTENING TORQUES : CLUTCH

1 - GEARBOX CLUTCH F5M43

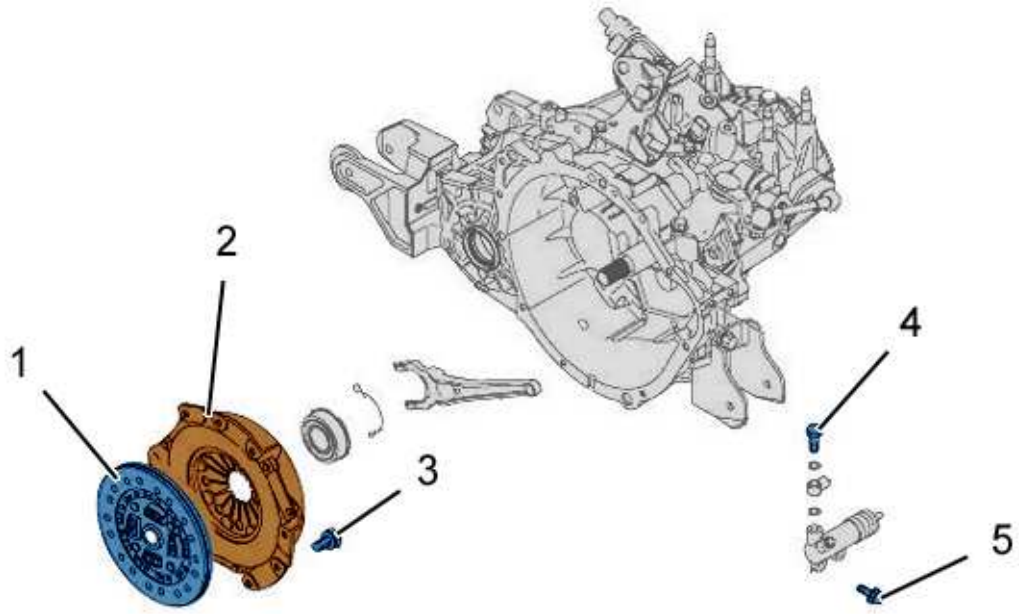

b2bb00td

(1) Clutch friction plate.

(2) Clutch mechanism.

(3) Clutch cover mounting bolt.

(4) Clutch slave cylinder supply union bolt.

(5) Clutch slave cylinder securing bolt(s) .

Gearbox clutch F5M43.

Reference	Designation	Tightening torque
(3)	Clutch cover mounting bolt	1,8 daNm
(4)	Clutch slave cylinder supply union bolt	2,2 daNm
(5)	Clutch slave cylinder securing bolt(s)	1,8 daNm

2 - GEARBOX CLUTCH F5MBB - W5MBB - AINSIN MIDSIZE (AMS)

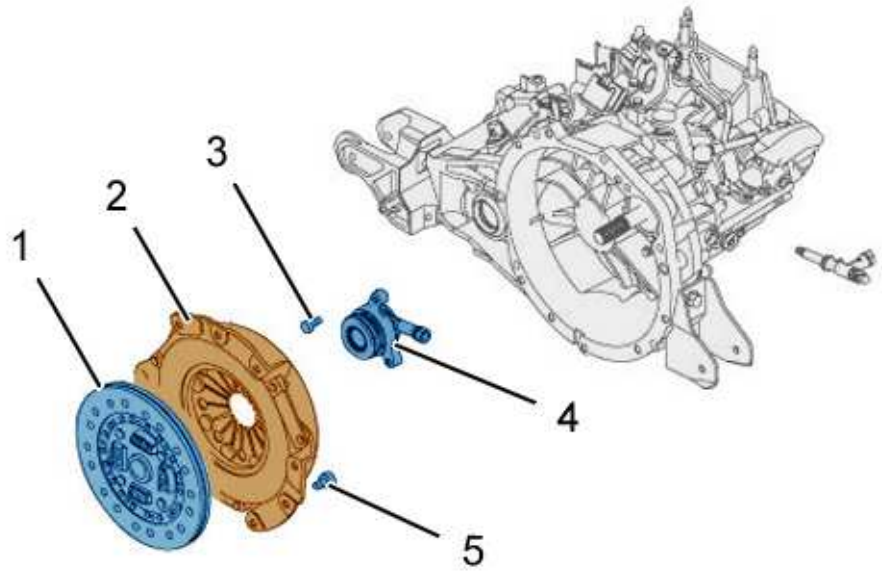

b2bb00ud

(1) Clutch friction plate.

(2) Clutch mechanism.

(3) Screw fixing the hydraulic clutch bearing .

(4) Hydraulic clutch stop.

(5) Clutch cover mounting bolt.

2 - 1 - Gearbox clutch F5MBB - W5MBB

Reference	Designation	Tightening torque
(3)	Screw fixing the hydraulic clutch bearing	1 daNm
(5)	Clutch cover mounting bolt	2,7 daNm

2 - 2 - Gearbox clutch AINSIN MIDSIZE (AMS)

Reference	Designation	Tightening torque
(3)	Screw fixing the hydraulic clutch bearing	1 daNm
(5)	Clutch cover mounting bolt	2 daNm

CHECKING : WEAR ADJUSTMENT SYSTEM ON CLUTCH MECHANISM

ESSENTIAL : Observe the safety and cleanliness recommendations

WARNING : No resetting of the clutch wear adjustment is permitted

1 - FOREWORD

This document describes the additional procedure relating to the clutch mechanisms removal-refitting method; Apply the procedure according to the assembly identified.

2 - ZF - SACHS ASSEMBLY

2 - 1 - Check before removal

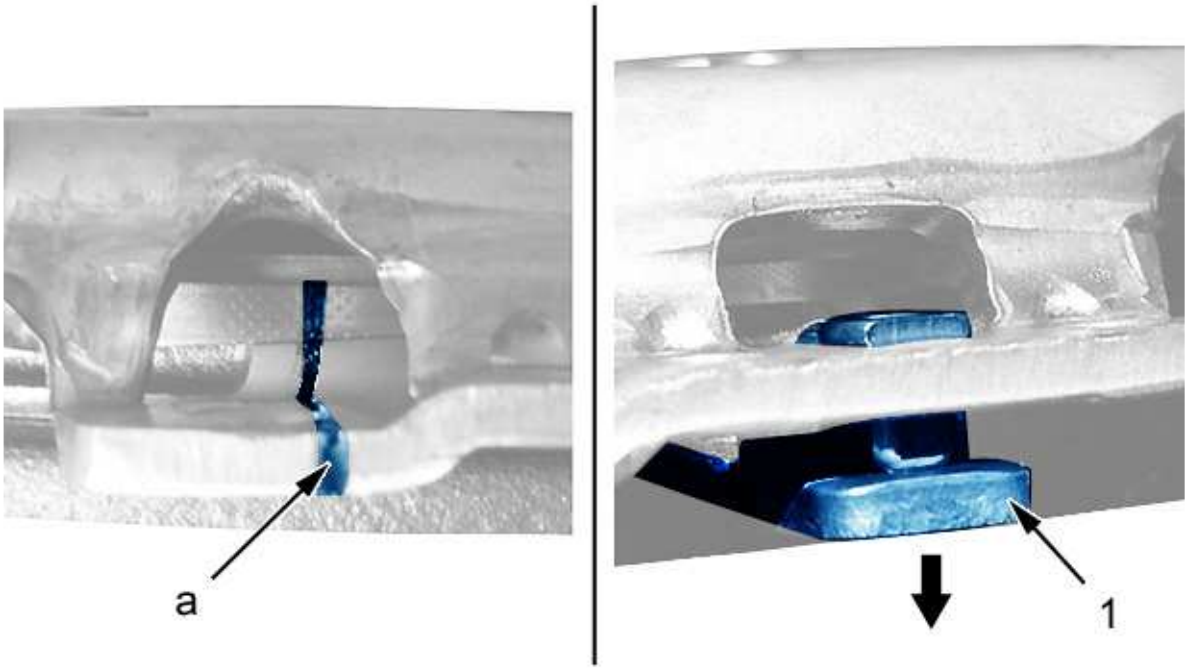

b2bd009d

Case of reuse :

- Before removing the clutch mechanism : Mark the position of the wear adjustment system through one of the openings in the clutch mechanism cover (at "a")
- When removing the clutch mechanism : Check that the stop (1) is released progressively, otherwise press in the direction of the arrow to release the stop

2 - 2 - Check after refitting

After refitting the clutch mechanism : The wear adjustment system must be in the position marked on removal (at "a"), otherwise replace the clutch mechanism and friction plate assembly.

3 - LUK ASSEMBLY

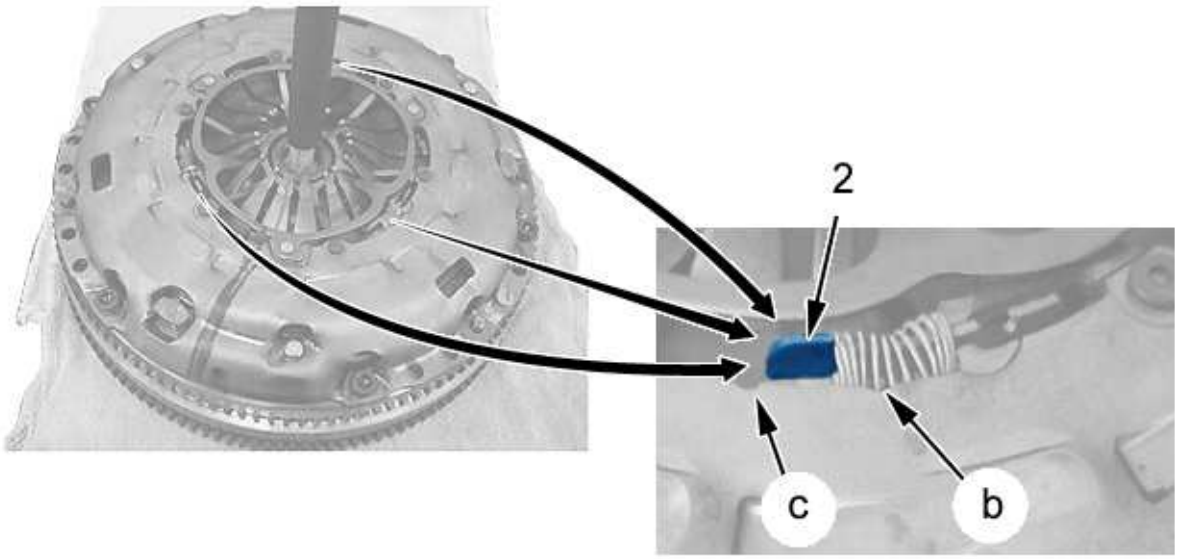

b2bd00ad

In the case of reuse, the position of the index (2) must be between the notches "b" and "c", otherwise replace the clutch mechanism and friction plate assembly.

NOTE : 3 indexes per mechanism

4 - OTHER FITMENTS

No check to be carried out.

REMOVING - REFITTING : CLUTCH MECHANISM

ESSENTIAL : Observe the safety and cleanliness recommendations

1 - TOOLING

Equipment : flywheel stop .

tool	Reference	Designation
[0220]  *e5ab198t*	[0220]	Clutch centring drift

2 - REMOVING

Put the vehicle on a hoist.

Disconnect the ancillaries battery.

Remove the gearbox.

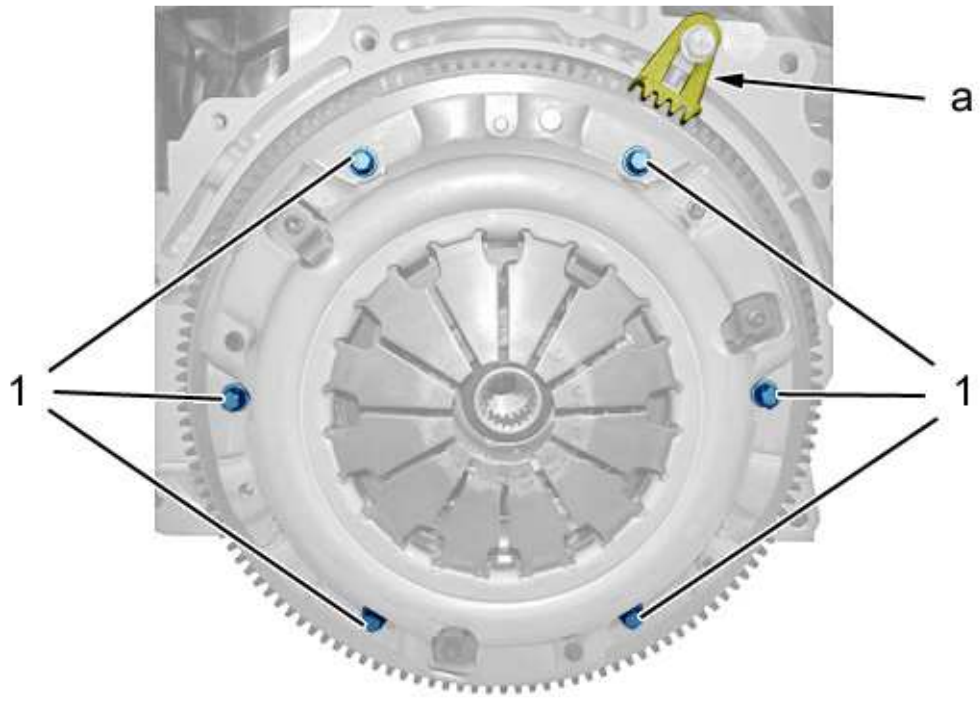

b2bg064d

Immobilise the flywheel ; With the stop (at "a").

Remove :

- The bolts (1)
- The clutch mechanism
- The clutch disc

3 - CHECKS

Visually check :

- The flywheel face for damage or scores
- The flywheel for wear
- The condition of the starter ring gear
- The clutch mechanism
- The hydraulic clutch stop

If oil is present in the clutch housing, check :

- The hydraulic clutch stop seal
- The crankshaft seal (After removal of the single engine flywheel)

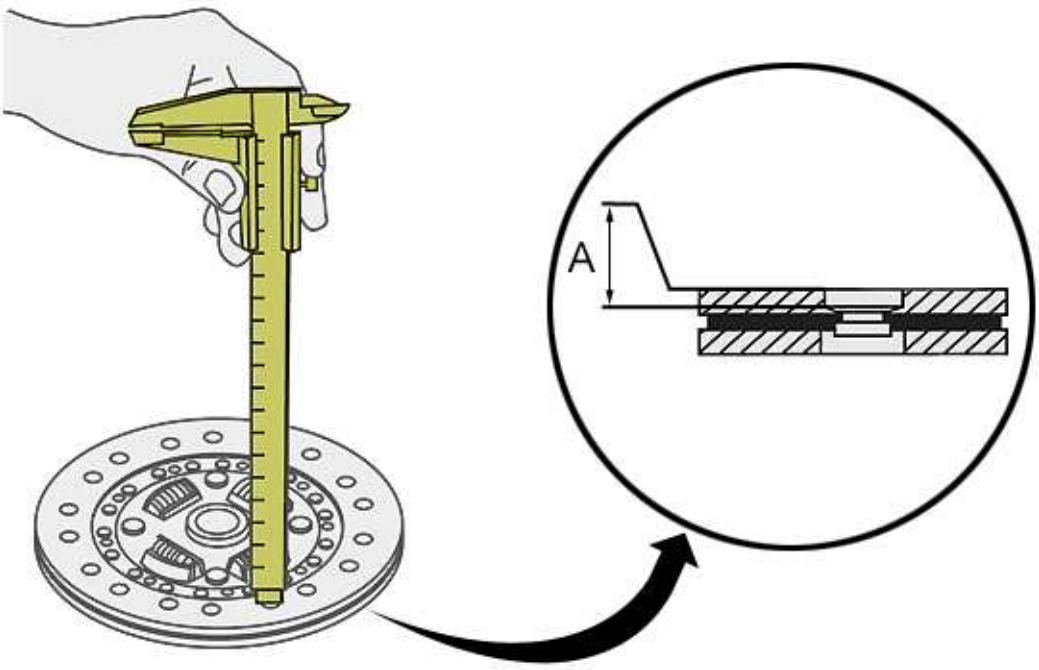

b2bm02jd

Measure the thickness "A" between a rivet and the surface of the clutch disc.

Replace the disc if the dimension "A" is less than 3 mm.

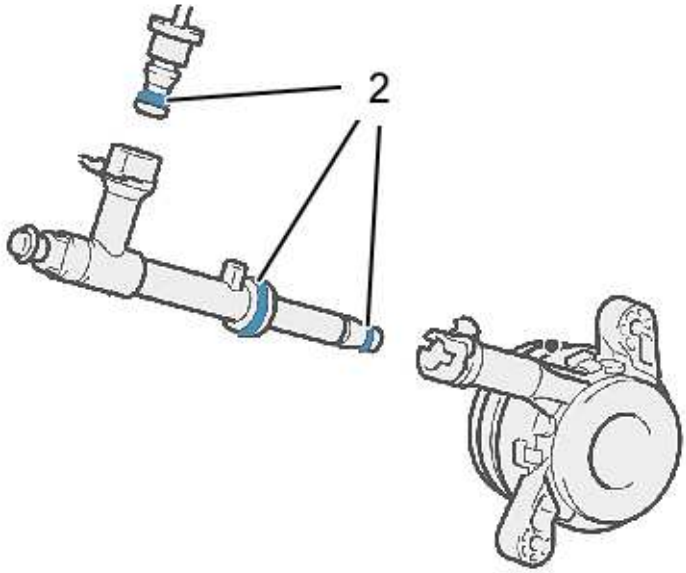

b2bm02kd

Check the condition of the seals (2) on the hydraulic pipes.

Replace the seals (2) with new seals (If necessary).

4 - REFITTING

> **WARNING :** Clean the splines of the primary shaft

> **WARNING :** Adhere to the tightening torques

Refit the clutch disc .

Centre the clutch disc ; Using tool [0220].

Replace the clutch mechanism.

Refit and tighten the screws (1).

Remove the flywheel stop .

Lightly apply KLÜBERPASTE 46 MR 401 grease to the grooves of the inlet shaft only (White grease).

Remove the excess grease at the end of the input shaft using a cloth.

Refit the gearbox.

Return the vehicle to its wheels.

WARNING : Perform the operations that are required following a reconnection of the ancillaries battery

Reconnect the ancillaries battery.

DISMANTLING - RE-ASSEMBLY : GEARBOX

ESSENTIAL : Observe the safety and cleanliness recommendations

1 - TOOLING

Equipment :

- workshop hoist
- A trolley jack
- Soft block

tool	Reference	Designation
[0216-G1] 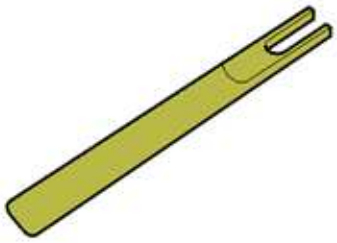 *e5af02st*	[0216-G1]	Tool for detaching ball-joints Ø 10 mm

2 - REMOVING

Put the vehicle on a hoist.

Lift and support the vehicle.

Remove :

- The protective panel under the engine
- The front left-hand splash-shield
- The ancillaries battery
- The air filter housing
- The engine management ECU

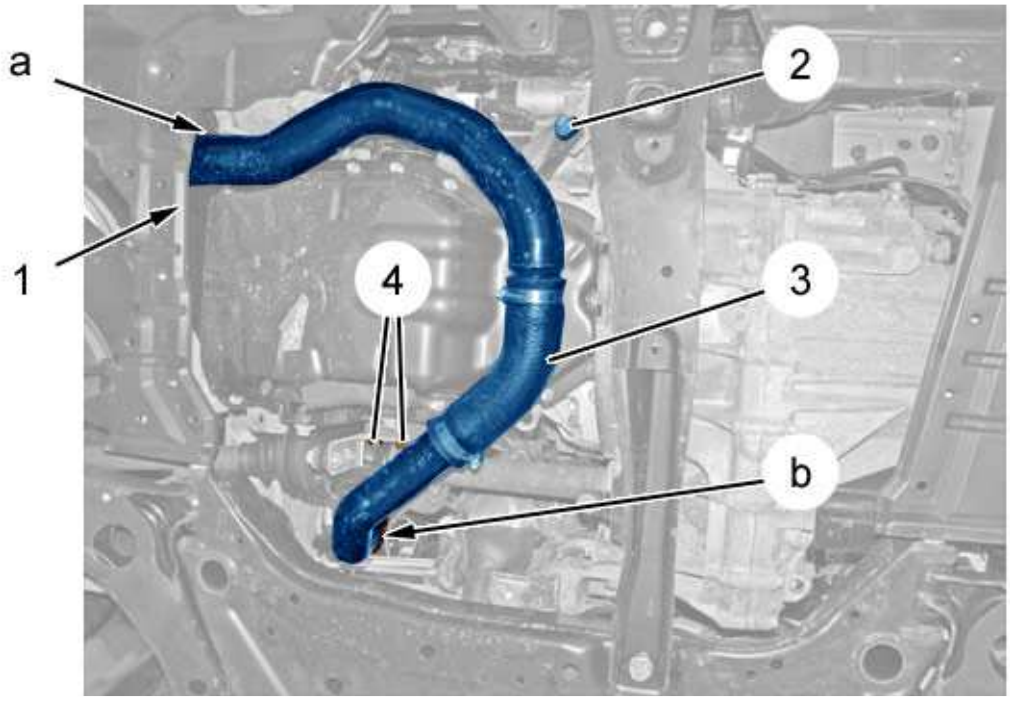

b2cg2kud

Uncouple the air duct (3) (at "a","b").

SPECIAL FEATURE :

FOR : 1PMJ - B0FRV : DIESEL 1.8L MMC 103KW;DBMBP : 4X4 6-SPEED MANUAL GEARBOX

FOR : 1CMJ - B0FRV : DIESEL 1.8L MMC 103KW;DBMBP : 4X4 6-SPEED MANUAL GEARBOX

FOR : 1CMJ - DBMBP : 4X4 6-SPEED MANUAL GEARBOX;B0FRQ : 1.8L MMC DIESEL

FOR : 1PMJ - DBMBP : 4X4 6-SPEED MANUAL GEARBOX;B0FRQ : 1.8L MMC DIESEL

Remove :

- The bolt (2)
- The bolt (1)
- The bolts (4)
- The air duct (3)
- **The subframe**
- **The drive shafts**
- **The transfer box**

SPECIAL FEATURE :

FOR : 1CMJ - DBMCT : 4X2 6-SPEED MANUAL GEARBOX;B0FRQ : 1.8L MMC DIESEL

FOR : 1PMJ - DBMCT : 4X2 6-SPEED MANUAL GEARBOX;B0FRQ : 1.8L MMC DIESEL

Remove :

- The bolt (2)
- The bolt (1)
- The bolts (4)
- The air duct (3)
- **The subframe**
- **The drive shafts**

Release :

- **The starter motor**
- **The intermediate exhaust line**

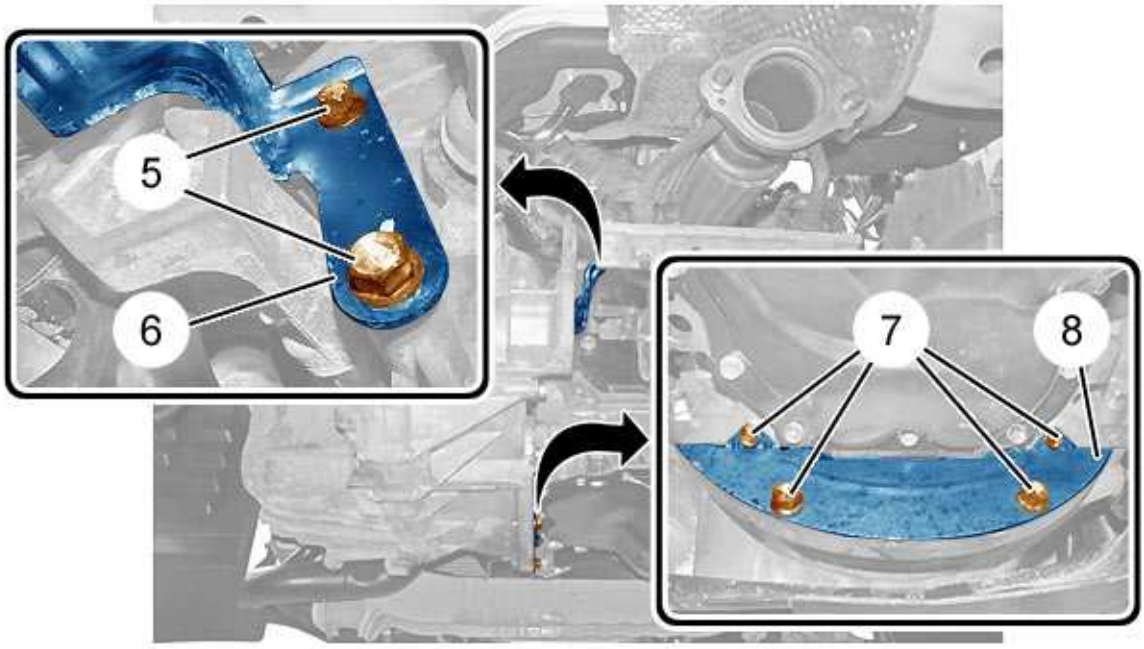

b2cg2kwd

Remove :

- The bolts (5)
- The bracket (6)
- The bolts (7)
- The protection plate (8)

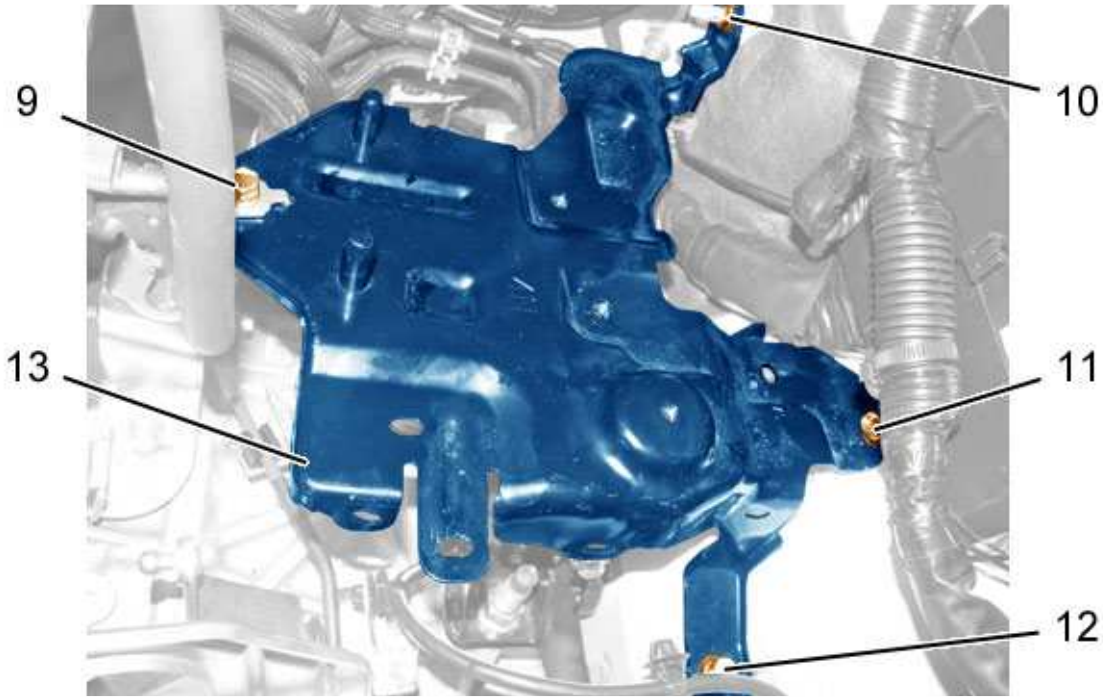

b2cg2kyd

Remove :

- The bolt (9)
- The nut (10)
- The bolt (11)
- The bolt (12)
- The bracket (13)

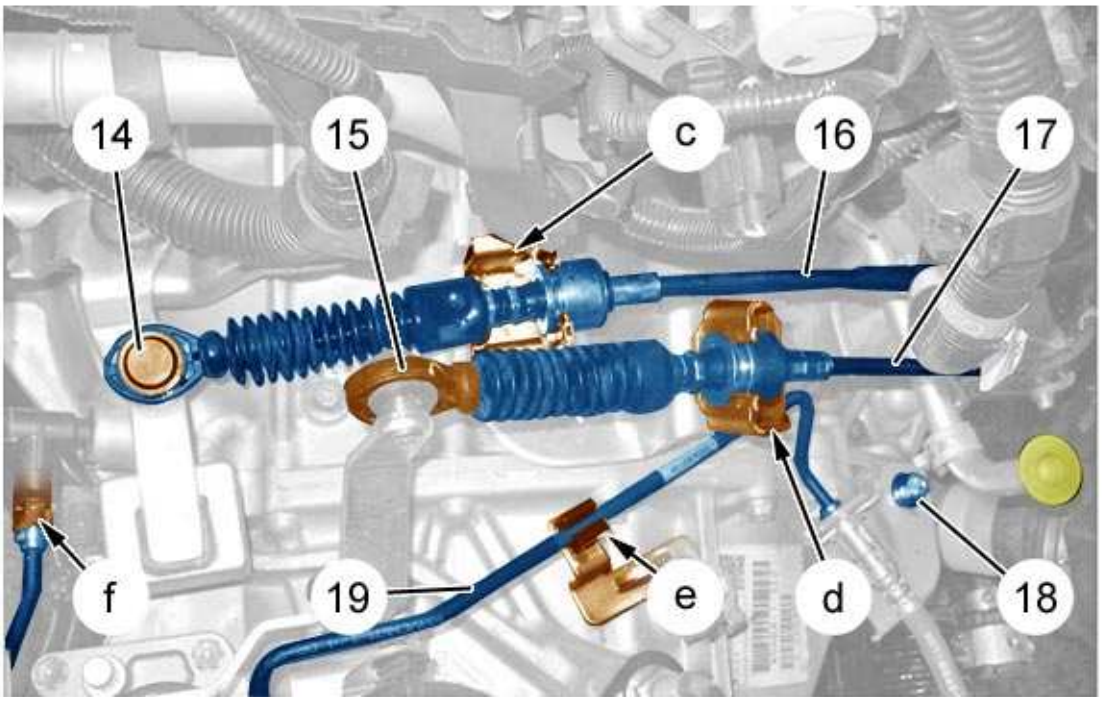

b2cg2l0d

Uncouple :

- The ball joint (14) ; Using tool [0216-G1]
- The ball joint (15) ; Using tool [0216-G1]
- The control cable (16) (at "c")
- The control cable (17) (at "d")
- The tube (19) (at "e","f")

Remove the bolt (18).

Prise apart pipe (19).

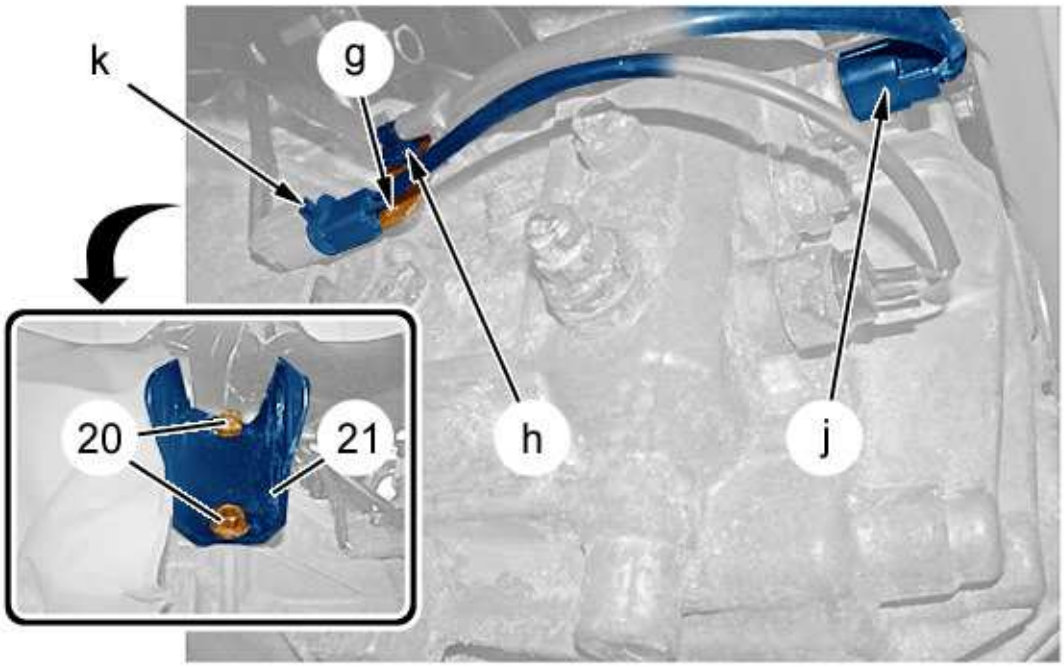

b2cg2l1d

Disconnect the connectors (at "j","k").

Unclip :

- The connector (at "g")
- The electrical harness (at "h")

Remove :

- The bolts (20)
- The bracket (21)

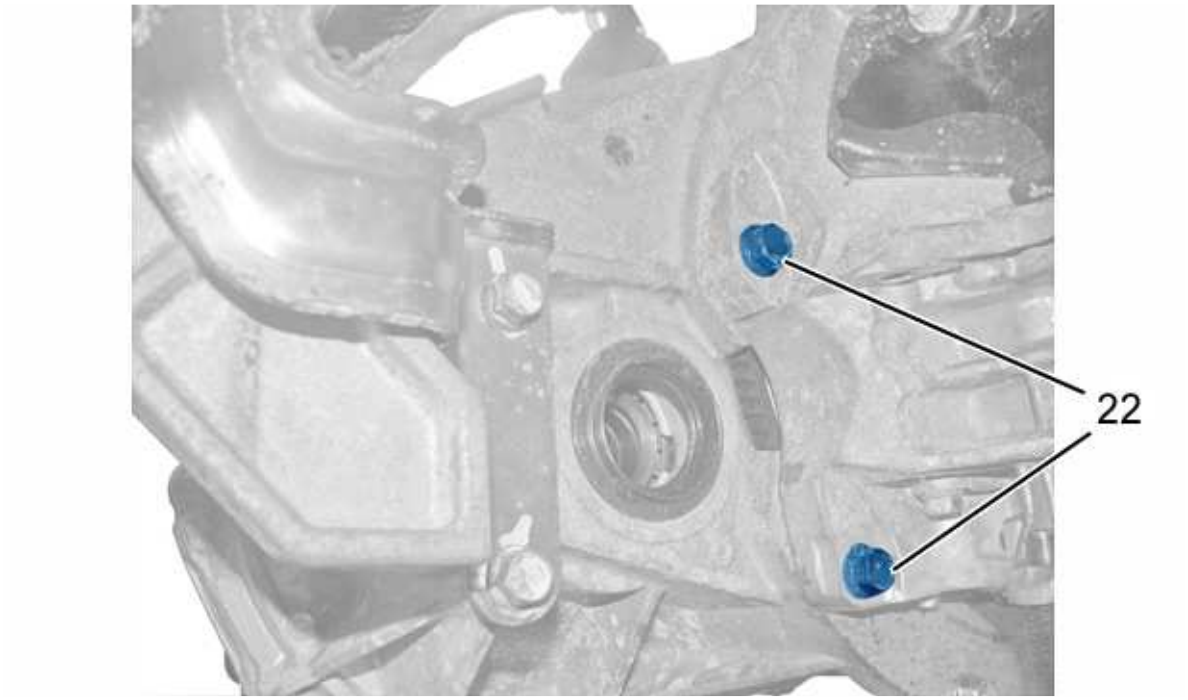

b2cg2l4d

Remove the bolts (22).

Sling the gearbox ; Using the workshop crane.

Hold the engine in position ; Using a roller jack and a soft block.

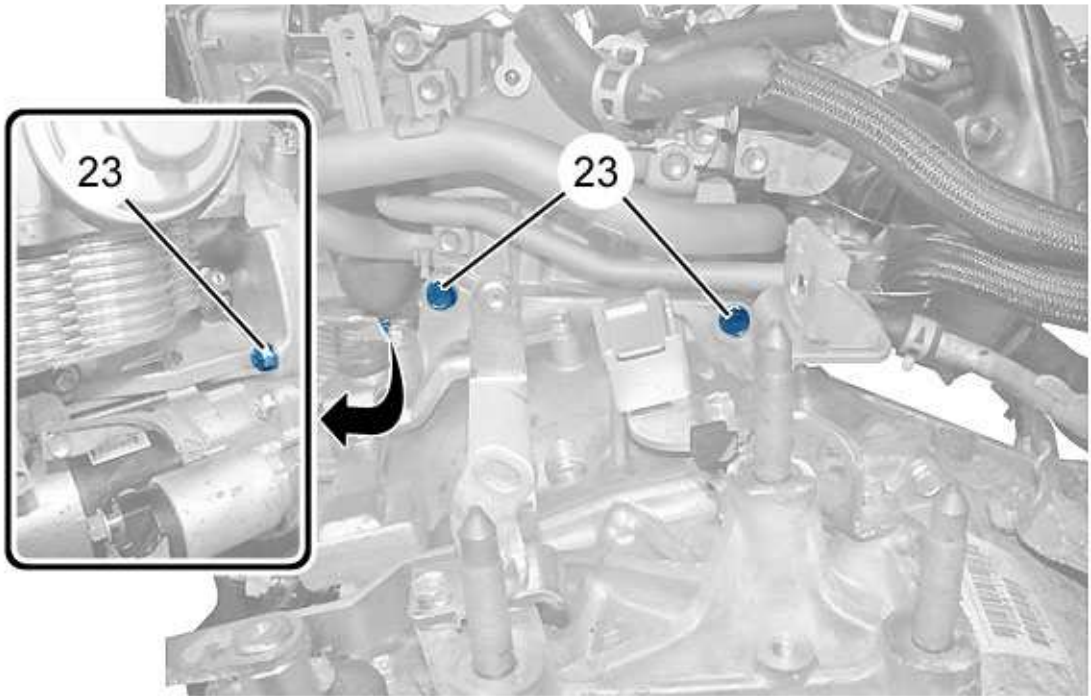

b2cg2l5d

Remove the bolts (23).

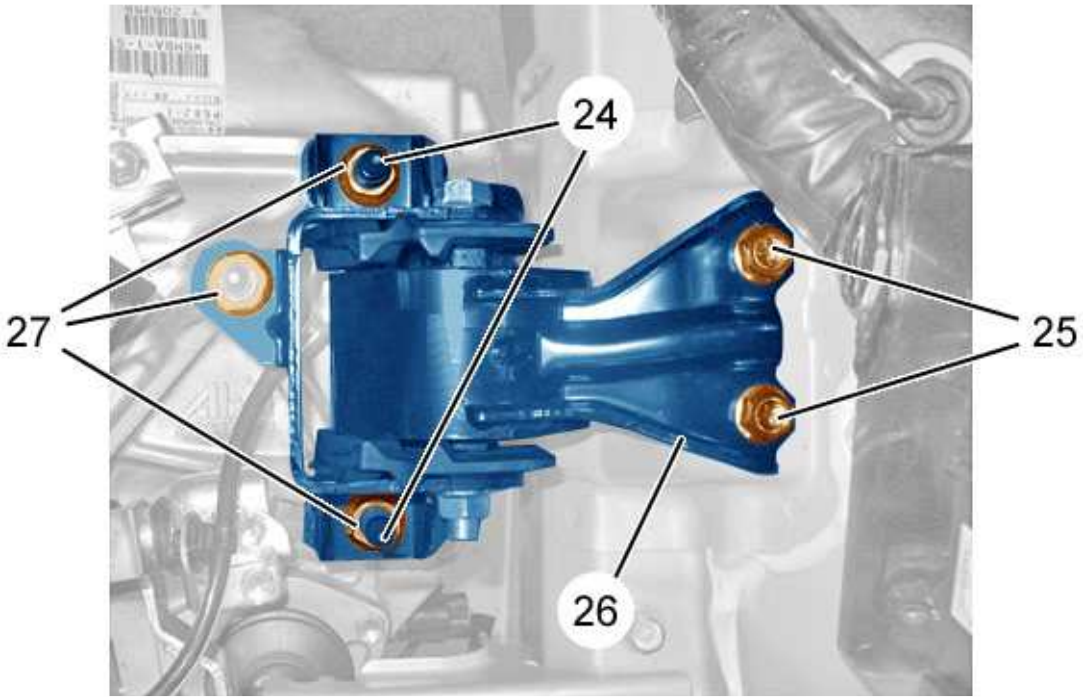

b2cg2l7d

Remove :

- The nuts (27)
- The bolts (25)
- The gearbox mounting (26)
- The studs (24)

> **WARNING :** Do not damage the ancillary drive belt pulleys against the chassis member as the engine-gearbox assembly is being lowered

Lower the power unit assembly ; Using a roller jack and a soft block.

Remove the gearbox.

3 - REFITTING

> **WARNING :** Adhere to the tightening torques

Tightening torques :

- 4N13 engine
- Engine-gearbox assembly mounting
- Engine/gearbox coupling
- Gearbox

Check :

- That there is no leak at the crankshaft seal
- There are no oil leaks at the stop guide seal
- The state of wear of the clutch
- The state of wear of the declutch bearing

NOTE : Rectify (If necessary)

> **WARNING :** Clean the input shaft completely along its entire length, over its entire periphery and in the grooves

Protect the interior of the clutch housing from splashes of grease.

Apply the recommended grease uniformly on the stop guide and the input shaft.

Grease the fingers of the clutch fork.

NOTE : Use MOLYCOTE G-RAPID PLUS grease

Remove the surplus grease on the top of the grooves and the end of the input shaft using a cloth.

> **WARNING :** An excess of grease will contaminate the clutch friction plate and cause noise in neutral, slipping or juddering of the clutch

> **WARNING :** If the clutch disc is reused, the disc hub must be free of traces of oxidation

NOTE : Check that the centring pins are present on the gearbox and on the engine

On refitting, the clutch stop must be on its guide and positioned by the clutch release fork.

Refit the gearbox.

Raise the engine-gearbox assembly ; Using a roller jack and a soft block.

> **WARNING :** Apply a strip of loctite on the studs (24)

Refit :

- The studs (24)
- The gearbox mounting (26)
- The bolts (25)
- The nuts (27)
- The bolts (23)

Take away the roller jack and the soft block supporting the engine.

Remove the sling from the gearbox.

Refit :

- The bolts (22)
- The bracket (21)
- The bolts (20)

Clip in place :

- The electrical harness (at "h")
- The connector (at "g")

Connect the connectors (at "k","j").

Position the tube (19).

Refit bolt (18).

Couple up :

- The tube (19) (at "e","f")
- The control cable (17) (at "d")
- The control cable (16) (at "c")
- The ball joint (15)
- The ball joint (14)

Refit :

- The bracket (13)
- The bolt (12)
- The bolt (11)
- The nut (10)
- The bolt (9)
- The protection plate (8)
- The bolts (7)
- The bracket (6)
- The bolts (5)

Position :

- **The intermediate exhaust line**
- **The starter motor**

SPECIAL FEATURE :

FOR : 1CMJ - DBMCT : 4X2 6-SPEED MANUAL GEARBOX;B0FRQ : 1.8L MMC DIESEL

FOR : 1PMJ - DBMCT : 4X2 6-SPEED MANUAL GEARBOX;B0FRQ : 1.8L MMC DIESEL

Refit :

- **The drive shafts**
- **The subframe**

- The air duct (3)
- The bolts (4)
- The bolt (1)
- The bolt (2)

SPECIAL FEATURE :

FOR : 1PMJ - DBMBP : 4X4 6-SPEED MANUAL GEARBOX;B0FRV : DIESEL 1.8L MMC 103KW

FOR : 1CMJ - DBMBP : 4X4 6-SPEED MANUAL GEARBOX;B0FRV : DIESEL 1.8L MMC 103KW

FOR : 1PMJ - DBMBP : 4X4 6-SPEED MANUAL GEARBOX;B0FRQ : 1.8L MMC DIESEL

FOR : 1CMJ - DBMBP : 4X4 6-SPEED MANUAL GEARBOX;B0FRQ : 1.8L MMC DIESEL

Refit :

- **The drive shafts**
- **The subframe**
- The air duct (3)
- The bolts (4)
- The bolt (1)
- The bolt (2)
- **The transfer box**

Couple up the air duct (3) (at "b","a").

Refit :

- **The engine management ECU**
- **The air filter housing**
- **The ancillaries battery**
- **The front left-hand splash-shield**
- **The protective panel under the engine**

Return the vehicle to its wheels.

> **WARNING :** Perform the operations that are required following a reconnection of the ancillaries battery

Reconnect the ancillaries battery.

DISMANTLING - RE-ASSEMBLY : FRONT MUD FLAPS

ESSENTIAL : Observe the safety and cleanliness recommendations

1 - TOOLING

tool	Reference	Description
[1350-ZZ] 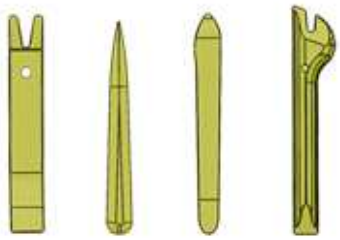 *e5ab03ht*	[1350-ZZ]	Stripping tool

2 - REMOVING

Place the vehicle on a 2-post lift.

Unclip and detach : The trim of the front wing .

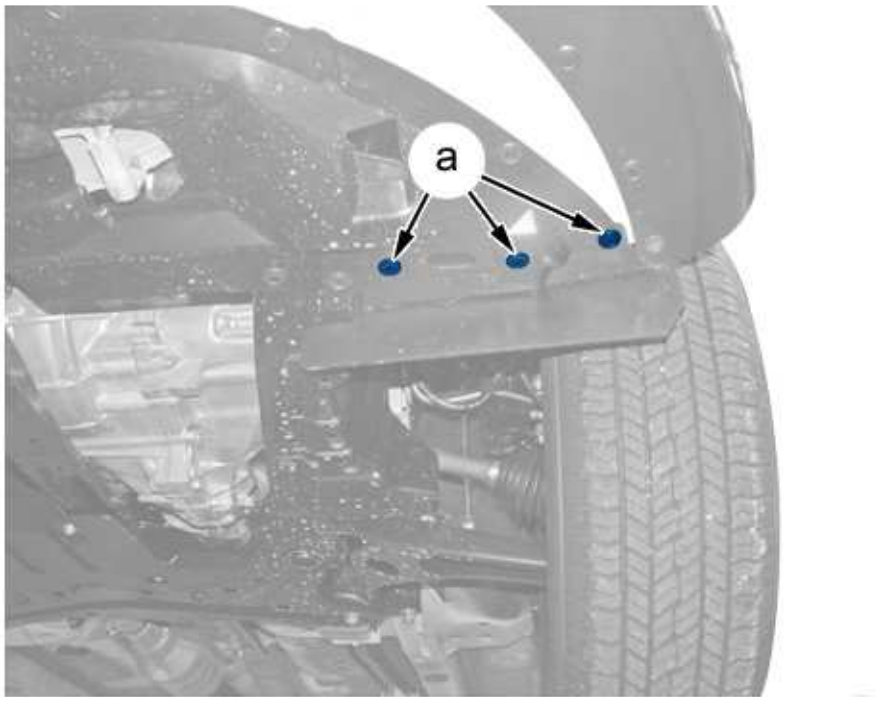

c5jg13kd

Unclip the clips (at "a") ; Using tool [1350-ZZ].

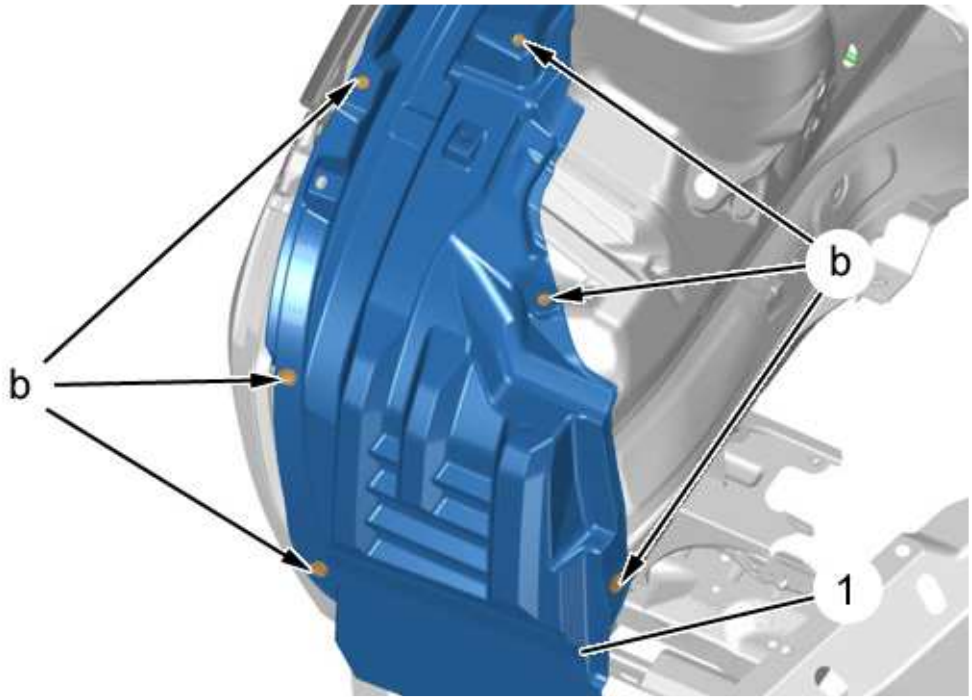

c5jg0z0d

Unclip the clips (at "b") ; Using tool [1350-ZZ].

Partially disengage the front mud flap (1).

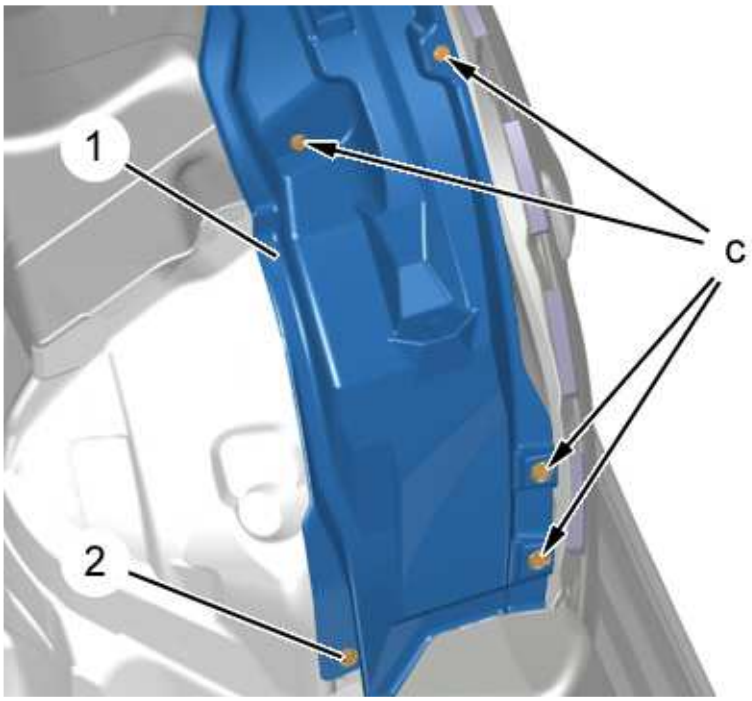

c5jg0z1d

Unclip the clips (at "c") ; Using tool [1350-ZZ].

Remove :

- The securing bolt (2)
- The front splash shield (1)

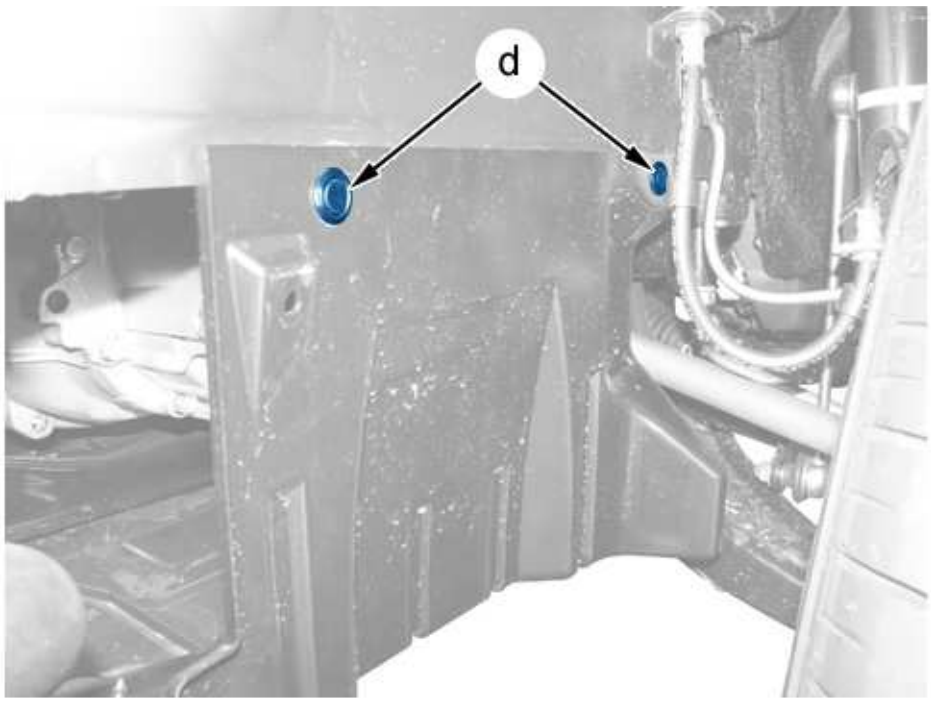

c5jg0z2d

Unclip the clips (at "d") ; Using tool [1350-ZZ].

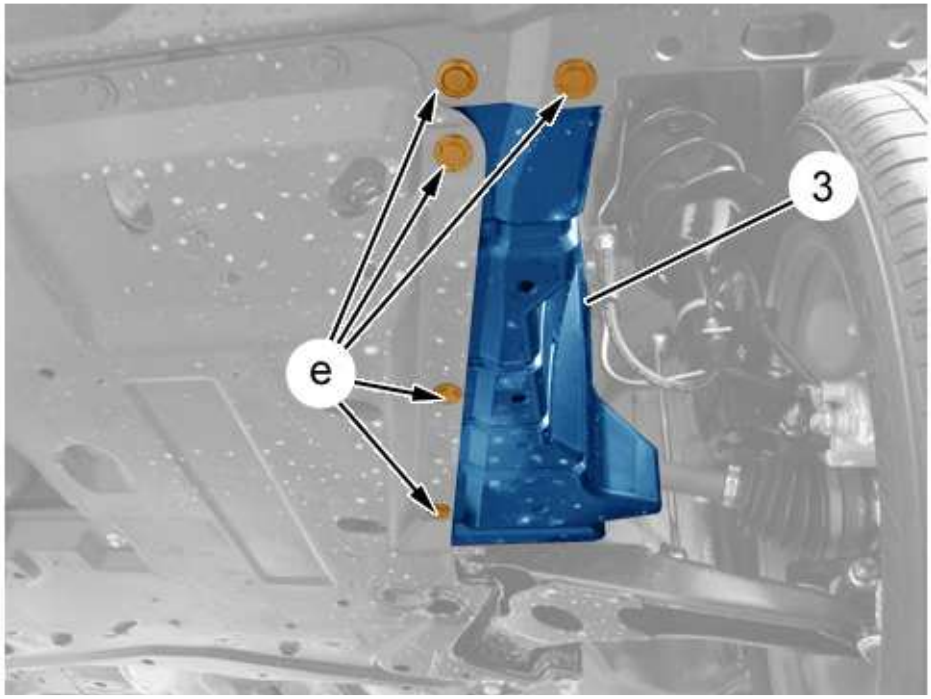

c5jg0z3d

Unclip the clips (at "e") ; Using tool [1350-ZZ].

Remove the protector (3) (Lateral).

3 - REFITTING

Proceed in the reverse order to removal.

NOTE : Check the condition of the securing clips ; Replace if necessary

DISMANTLING - RE-ASSEMBLY : FRONT WING EMBELLISHER

ESSENTIAL : Observe the safety and cleanliness recommendations

1 - TOOLING

tool	Reference	Designation
[1350-ZZ] 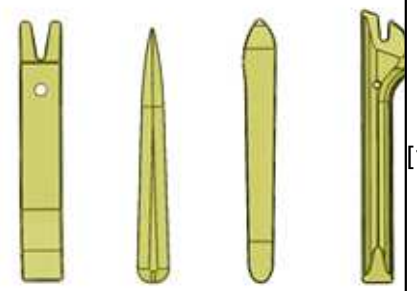 *e5ag02mt*	[1350-ZZ]	Stripping tools

2 - REMOVING

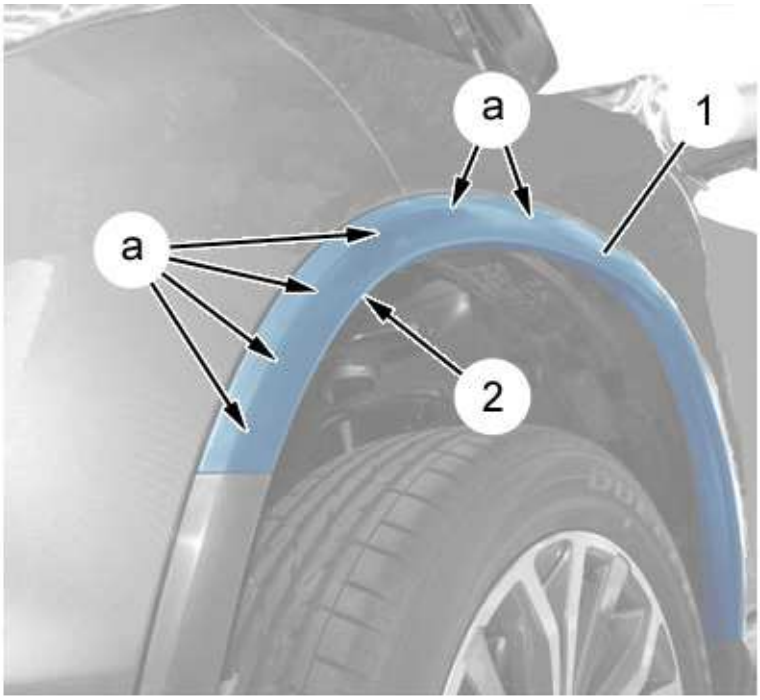

c5jg13wd

Remove the bolt (2).

Unclip : The trim of the front wing (1) (at "a") ; Using tool [1350-ZZ].

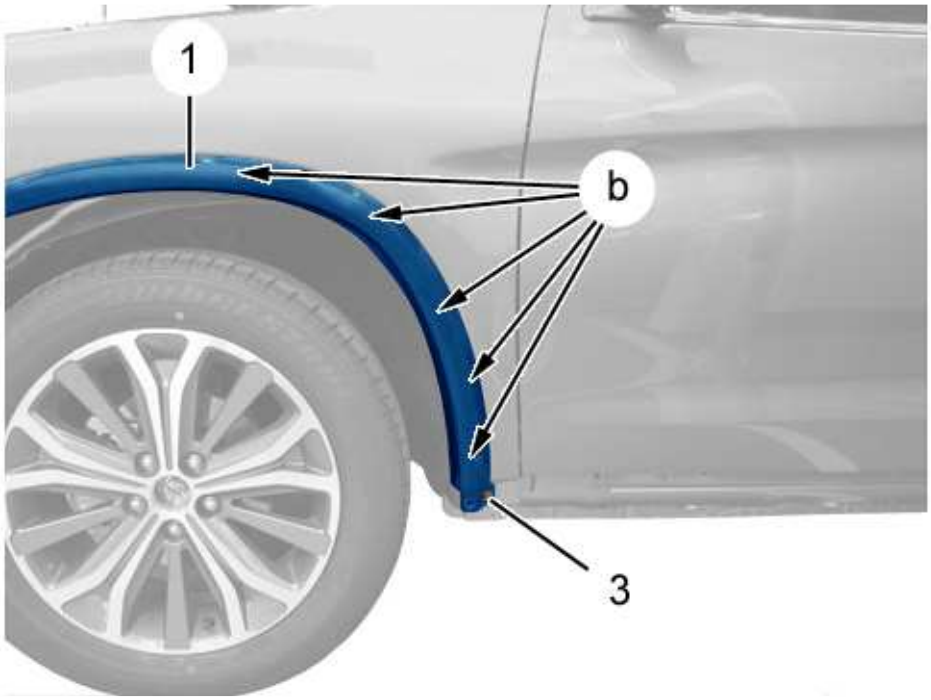

c5jg0zqd

Remove :

- **The sill trim**
- The securing bolt (3)

Unclip : The trim of the front wing (1) (at "b") ; Using tool [1350-ZZ].

Remove the front wing (1) trim .

3 - REFITTING

> **WARNING :** Always replace the faulty clips

Proceed in the reverse order to removal.

DISMANTLING - RE-ASSEMBLY : BODY SILL TRIM

ESSENTIAL : Observe the safety and cleanliness recommendations

1 - TOOLING

Tool	REFERENCE	Designation
[1350-ZZ] 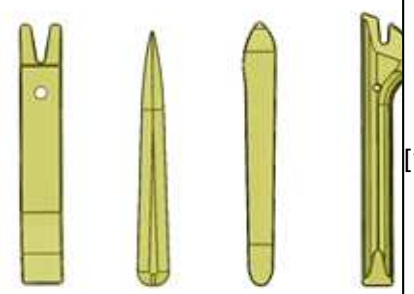 *e5ag02mt*	[1350-ZZ]	Stripping tools

2 - REMOVING

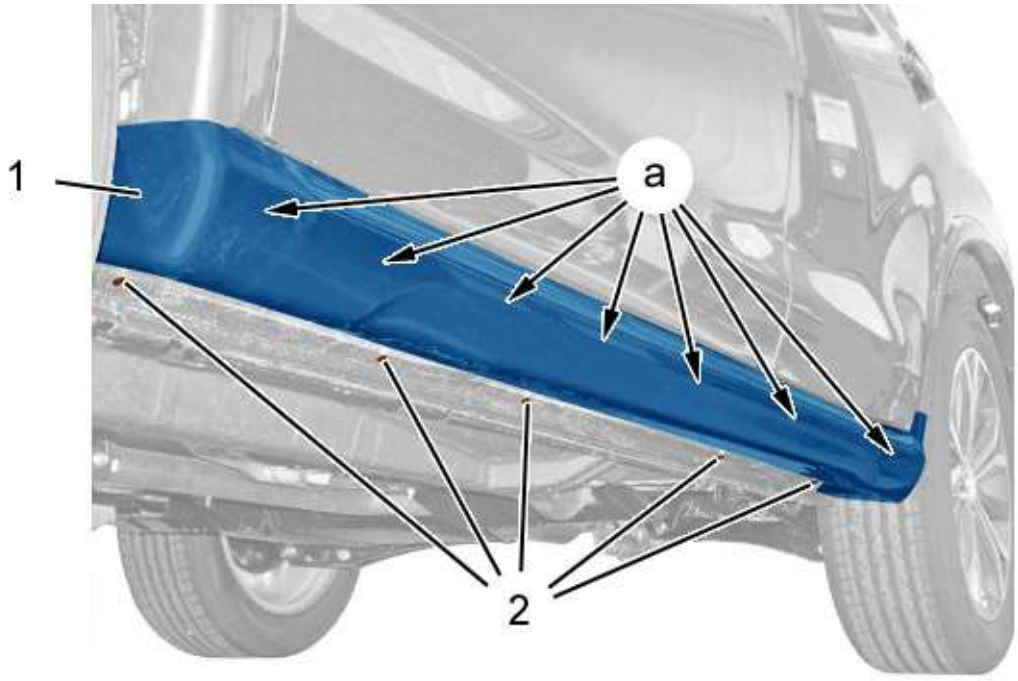

c5jg10bd

Remove the bolts (2).

Open the doors.

Unclip : The sill trim (2) (at "a") ; Using tool [1350-ZZ].

Remove : The sill trim (2).

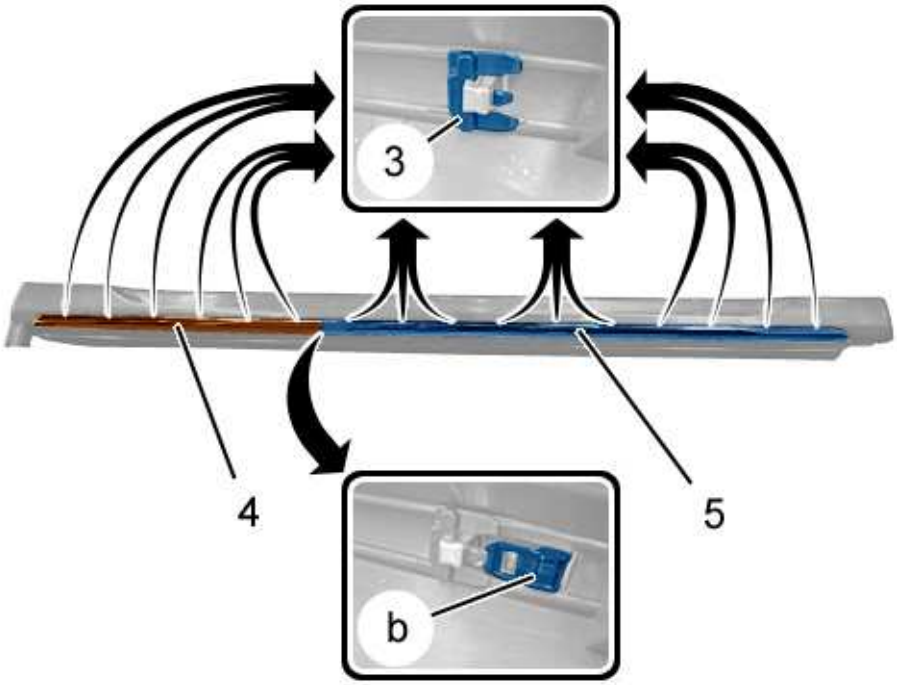

c5jg10cd

Remove the fastener (3).

Unclip : The side chromed strip (4)(as "b") ; Using tool [1350-ZZ].

Detach : The side chromed strip (4).

Remove :

- The side chromed strip (4)
- The side chromed strip (5)

3 - REFITTING

> **WARNING :** Always replace the damaged fixings

Proceed in the reverse order to removal.

DISMANTLING - RE-ASSEMBLY : BATTERY

ESSENTIAL : Observe the safety and cleanliness recommendations

1 - REMOVING

Switch off the ignition.



d1ag0nzd

WARNING : Protect the positive terminal of the battery ; With a plastic cap

Disconnect :

- The battery negative terminal (at "b")
- The positive terminal of the battery (at "a")

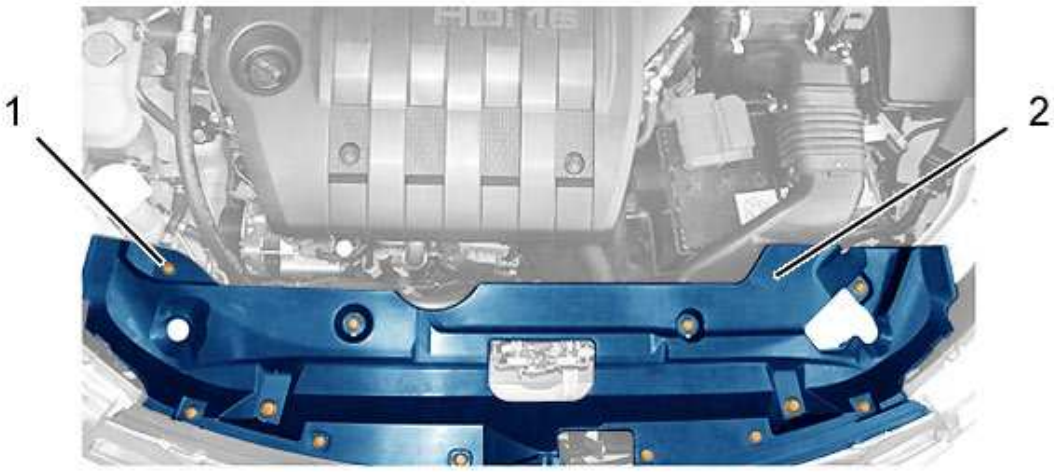

b1bg32md

Remove :

- The pins (1)
- The bumper deflector (2)

SPECIAL FEATURE :

FOR : 1PMJ - B0FRV : DIESEL 1.8L MMC 103KW

FOR : 1CMJ - B0FRV : DIESEL 1.8L MMC 103KW

FOR : 1PMJ - B0FRQ : 1.8L MMC DIESEL

FOR : 1CMJ - B0FRQ : 1.8L MMC DIESEL

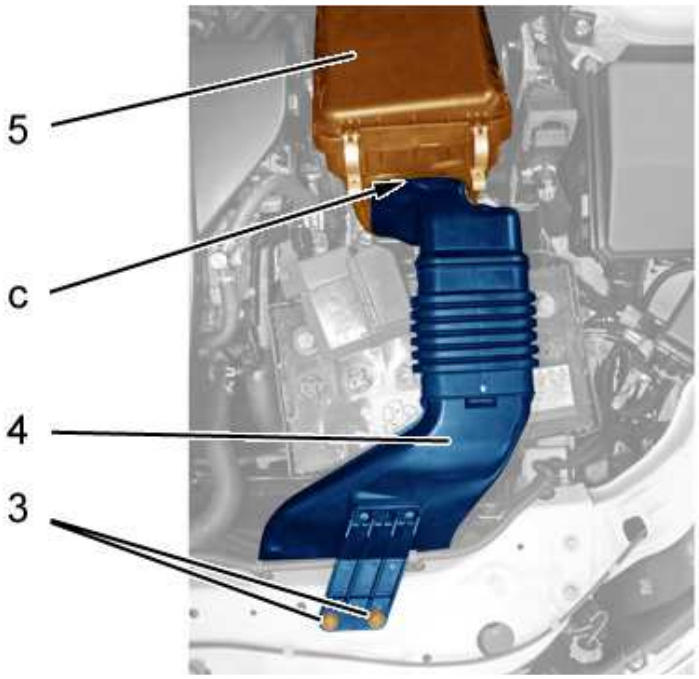

d1ag0o2d

SPECIAL FEATURE :

FOR : 1PMJ - B0FRU : 2.0L MMC EURO5 INJECTION

FOR : 1CMJ - B0FRU : 2.0L MMC EURO5 INJECTION

FOR : 1PMJ - B0FRO : 1.6L MMC INJECTION

FOR : 1CMJ - B0FRO : 1.6L MMC INJECTION

FOR : 1PMJ - B0FRP : EURO4 MMC 2.0L INJECTION

FOR : 1PMJ - B0FRS : EURO2 MMC 2.0L INJECTION

FOR : 1CMJ - B0FRP : EURO4 MMC 2.0L INJECTION

FOR : 1CMJ - B0FRS : EURO2 MMC 2.0L INJECTION

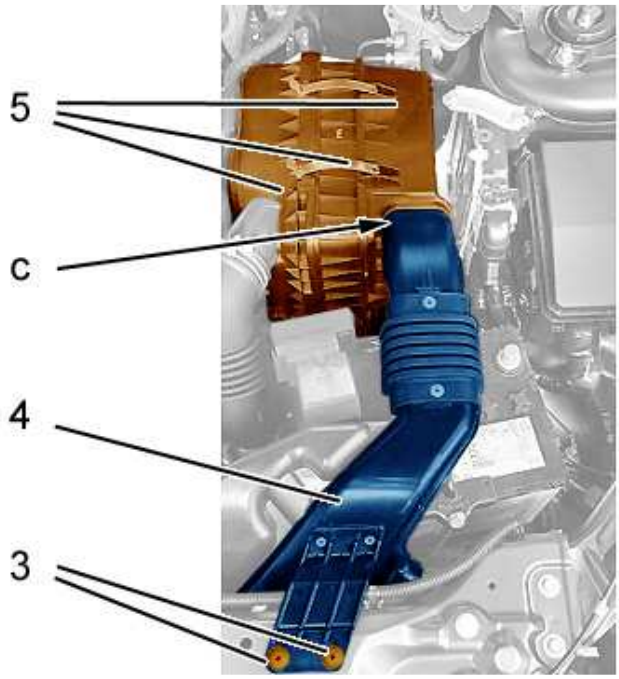

b1bg32nd

Remove the pins (3).

Uncouple the air duct (4) from the air filter housing assembly (5) (at "c").

Remove the air inlet duct (4).

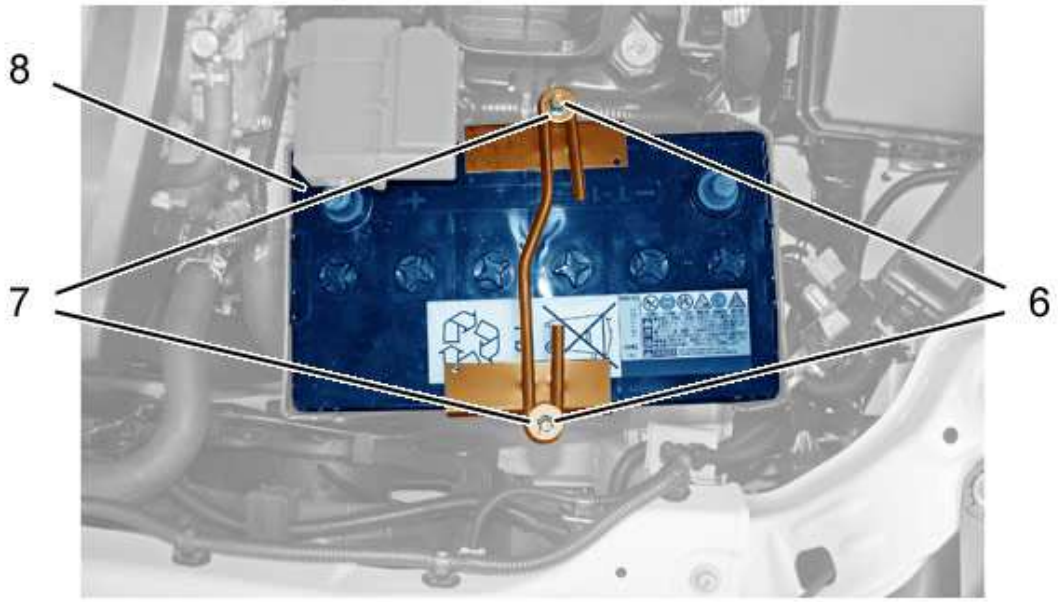

d1ag0opd

Loosen the 2 nuts (6) without removing them.

Remove :

- The fixing lugs (7)
- The battery (8)

2 - REFITTING

> **WARNING :** Take care with the positioning of the fixing lugs (7)



d1ag0o4d

Refit :

- The battery (8)
- The fixing lugs (7)

Tighten the 2 nuts (6).

Refit the air inlet duct (4).

Connect the air duct (4) on the air filter housing assembly (5) (at "c").

Refit :

- The pins (3)
- The bumper deflector (2)
- The pins (1)

> **WARNING :** Perform the operations to be carried out following reconnection of the battery

Reconnect :

- The positive terminal of the battery (at "a")
- The battery negative terminal (at "b")

DISMANTLING - RE-ASSEMBLY : AIR FILTER UNIT

ESSENTIAL : Respect the safety and cleanliness recommendations that are specific to high pressure diesel injection (HDi) engines

1 - FILTERING ELEMENT

1 - 1 - Removing

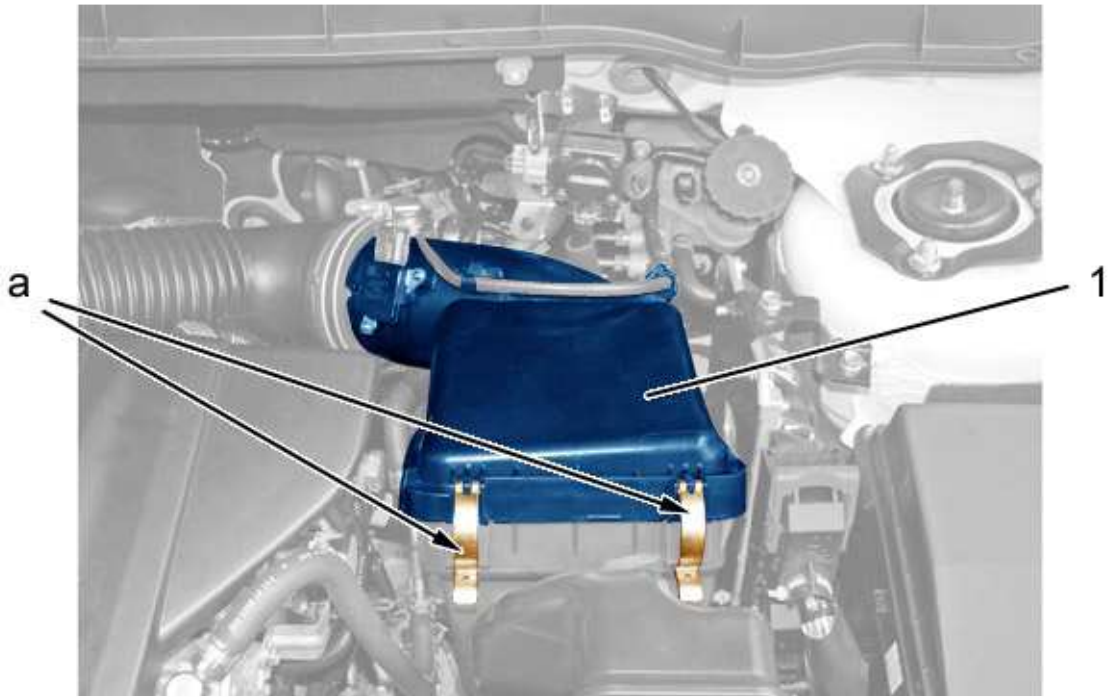

b1hg3hqd

Release the clips (at "a").

Raise the air filter housing cover (1).

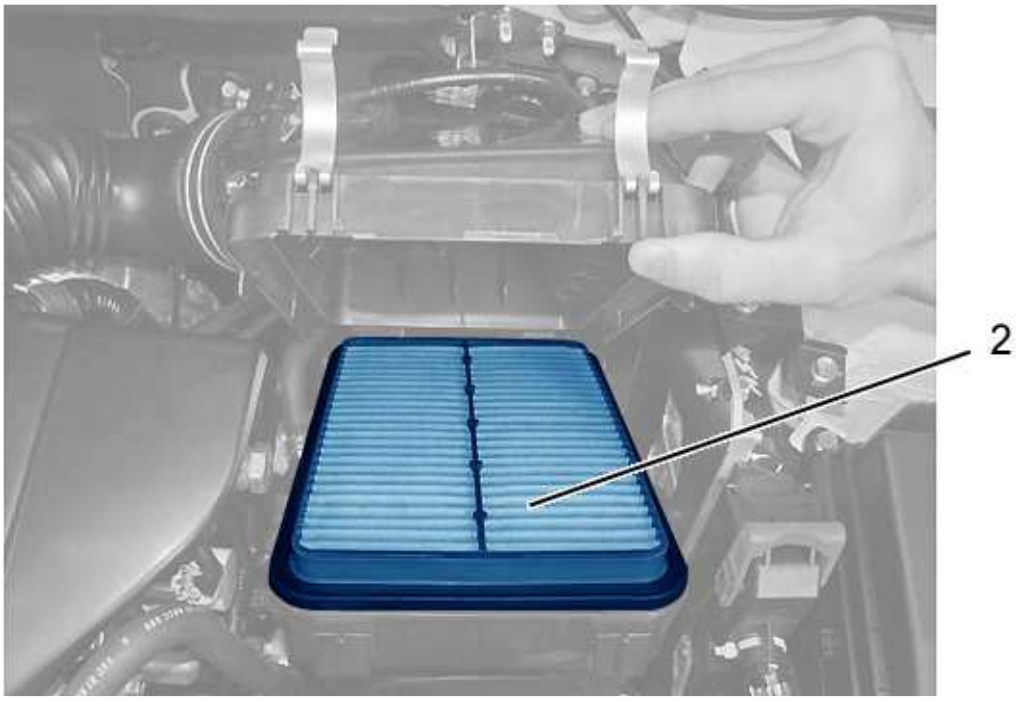

b1hg3hrd

Remove the filter element (2) from the air filter housing.

1 - 2 - Refitting

Refit : The air filter housing filter element (2).

Position : The air filter housing cover (1).

Refit the clips (at "a").

2 - AIR FILTER UNIT

2 - 1 - Removing

Disconnect the battery.

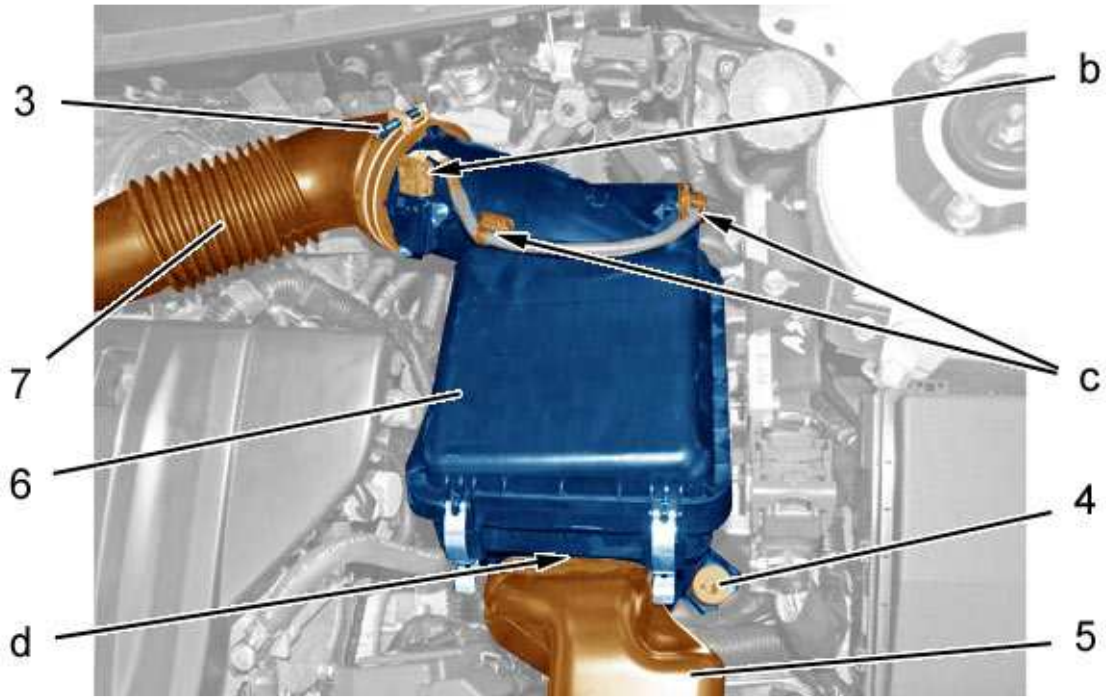

b1hg3hsd

Release and move aside the electrical harness (at "c").

Disconnect the connector (at "b").

Slacken the bolt (3).

Uncouple :

- The air inlet duct (7)
- The air inlet duct (5) (at "d")

Remove :

- The securing bolt (4)
- The air filter (6) box

2 - 2 - Refitting

Refit :

- The air filter (6) box
- The securing bolt (4)

> **WARNING :** Check that the seal is correctly positioned

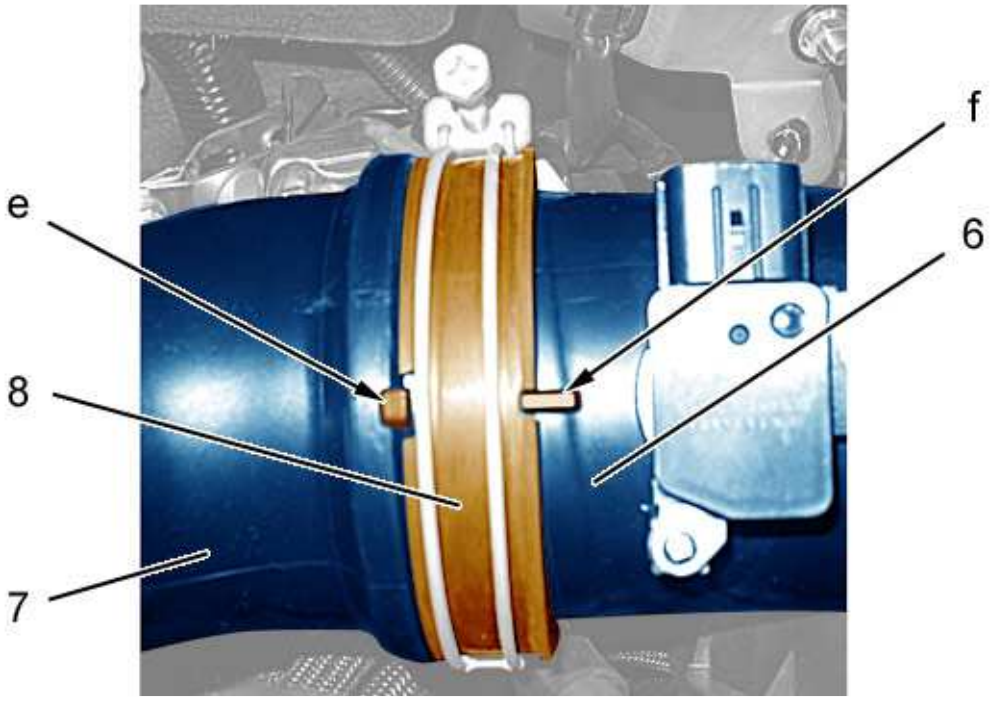

b1hg3htd

Check that the references "e" and "f" are still aligned with the markings on the seal (8).

Couple up :

- The air inlet duct (5) (at "d")
- The air inlet duct (7)

Tighten the bolt (3).

Connect the connector (at "b").

Put in place and clip the electrical harness (at "c").

> **WARNING :** Perform the operations to be carried out following reconnection of the battery

Reconnect the battery.

DISMANTLING - RE-ASSEMBLY : ENGINE MANAGEMENT ECU

ESSENTIAL : Observe the safety and cleanliness recommendations

WARNING : Before adding or replacing any parts, ensure that the customer has not lost their confidential card

1 - REMOVING

Disconnect the ancillaries battery.

Remove the air filter housing .

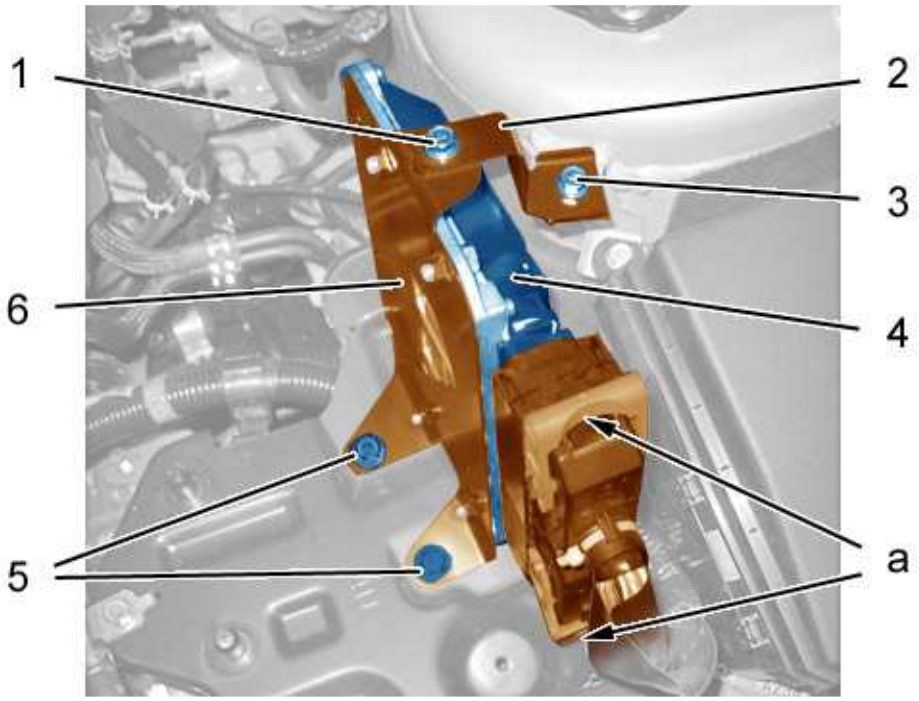

b1hg3mgd

Disconnect the connectors of the engine ECU (at "a").

Remove the bolt (1).

Slacken the bolt (3).

Pivot the mounting lug (2).

Remove :

- The bolts (5)
- The engine management ECU (4) and its mounting (6)



b1hg3mhd

Remove :

- The 4 nuts (7)
- The engine management ECU (4) from its support (6)

2 - REFITTING

Refit :

- The engine management ECU (4) on its support (6)
- The 4 nuts (7)
- The engine management ECU (4) and its mounting (6)
- The bolts (5)

Install support bracket (2).

Refit bolt (1).

Tighten the bolt (3) .

Reconnect the connectors of the engine management ECU (at "a").

Refit the air filter unit.

> **WARNING :** Perform the operations that are required following a reconnection of the ancillaries battery

Reconnect the ancillaries battery.

3 - OPERATIONS TO BE PERFORMED AFTER REPLACING THE ENGINE ECU

WARNING : Always carry out the following operations after replacing an ECU

WARNING : Swapping an engine management ECU between two vehicles means that it will be impossible to start the vehicles

WARNING : Do not replace simultaneously the engine management ECU and the ECUs relating to the immobiliser, as this would make it necessary to replace the starting card

When changing an engine management ECU, it is necessary to carry out using the diagnostic tool the procedure for the replacement of an engine management ECU from the "replacement parts" menu.

Requirements for initialising the immobiliser system :

- Be in possession of the access code to the built-in systems interface (written on the customer's confidential card) (according to equipment)
- Be in possession of a new engine management ECU
- Use the diagnostic tool

Procedure to be followed when the ECU is replaced :

- Recording of the data from the old ECU
- Replacing the ECU
- Configuration (subject to ordering the detached component)
- Register either the vehicle VIN number or the number of the starting card (according to equipment)
- Initialisation of the battery current neutral point
- Injectors classification
- Initialisation of the small injection quantities
- Initialisation of the fuel high pressure pump correction

Perform a forced regeneration of the particle filter.

4 - ENGINE MANAGEMENT ECU DOWNLOADING

Updating of the software of the engine ECU (4) is by downloading.

NOTE : This operation is performed using diagnostic equipment

Perform the downloading of the engine ECU (4) (if necessary).

Perform a forced regeneration of the particle filter.

5 - PROCEDURES FOR RETURNING UNDER WARRANTY

Disconnecting the engine ECU (4) automatically locks it up.

WARNING : If returning the component under warranty, return the engine ECU (4) together with the access code

OPERATIONS TO BE PERFORMED : BEFORE DISCONNECTION AND AFTER RECONNECTION OF THE ANCILLARIES BATTERY

The aim of this document is to describe the procedure to be followed when disconnecting and reconnecting an ancillaries battery.

1 - DISCONNECTION OF THE ANCILLARIES BATTERY

1 - 1 - Position the vehicle in a suitable spot

As a safety precaution, it is recommended that the battery disconnection operation is carried out in the following conditions :

- Ventilated area
- Area with clear access
- Flat area

1 - 2 - Apply the handbrake

For vehicles fitted with an electric handbrake (FSE) : Pull the application button for 3 seconds (A message appears).

> **NOTE :** If the parking brake cannot be released using the electric control, use the manual release system which permits activation of the parking brake mechanical release (Refer to the vehicle's handbook)

1 - 3 - Check the position of the selector lever

For vehicles fitted with an automatic gearbox or piloted manual gearbox :

- Apply the handbrake
- Position the selector lever in the neutral position "N"

1 - 4 - Customer personalisation

Note :

- The radio stations stored in the audio system
- The radio configuration

1 - 5 - Openings and access

> **WARNING :** For vehicles fitted with a "Belgian" type alarm, leave the bonnet open to prevent activation of the alarm

If the vehicle is parked in a covered and secure area, leave at least one window open and check that the other accesses are closed. Otherwise, lock all the doors and remove the key from inside the vehicle.

> **NOTE :** Mechanically lock the lock concerned to deactivate the unnecessary electrical power consuming equipment

WARNING : When the ancillaries battery is disconnected, the boot cannot be opened on vehicles equipped with a motorised boot

When carrying out an "ancillaries battery disconnected" operation requiring opening of the boot, disengage the motorised function of the boot before disconnecting the ancillaries battery.

Method for disengaging the motorised function of the boot :

- Open the boot
- Disengage the motorised function (short manual action down then up)
- Mechanically lock the lock using a tool (which results in the boot light switching off)

NOTE : If disengagement is not possible, close and open the boot electrically. Re-open the boot lock mechanically. Repeat the procedure for disengaging the motorised function of the boot

1 - 6 - Check that the ignition is off and remove the key from the ignition

WARNING : For vehicles fitted with a hands-free starting system, move the remote control more than 3 metres away from the vehicle

Check that nothing is connected on the diagnostic socket.

1 - 7 - Get out of the vehicle and close the door

WARNING : Mechanically lock the lock concerned to deactivate the unnecessary electrical power consuming equipment

The door can be left open for a specific requirement, but the unnecessary electrical power consuming equipment must be deactivated (Refer to paragraph 1.5).

1 - 8 - Waiting time before disconnecting the ancillaries battery

Wait 4 minutes for the vehicle's power consuming equipment to switch to standby before disconnecting the ancillaries battery.

NOTE : For vehicles equipped with a type AL4 automatic gearbox the waiting time before disconnecting the ancillaries battery is 12 minutes

1 - 9 - Disconnect the ancillaries battery

Disconnect the ancillaries battery starting with the negative terminal.

NOTE : If inaccessibility makes this impossible, start by disconnecting the ancillaries battery positive terminal

1 - 10 - Closing of doors

Mechanically unlock the closed doors (paragraph 1.5) if the vehicle is parked outside.

2 - RECONNECTION OF THE ANCILLARIES BATTERY

2 - 1 - Check the safety advice before reconnecting the ancillaries battery

Observe the following safety advice :

- Ventilated area
- Area with clear access
- Flat area
- Ignition off
- Key out of the vehicle
- No one inside the vehicle

2 - 2 - Reconnect the ancillaries battery

SPECIAL FEATURE :

FOR : 1CB1 -

FOR : 1CE3 -

FOR : 1CWF -

FOR : 1CA3 -

FOR : 1CA4 -

FOR : 1CA6 -

FOR : 1CA8 -

FOR : 1CA9 -

FOR : 1CB0 -

FOR : 1CB3 -

FOR : 1CB5 -

FOR : 1CB7 -

FOR : 1CB8 -

FOR : 1CB9 -

FOR : 1CH5 -

FOR : 1CLA -

FOR : 1CMC -

FOR : 1CMJ -

FOR : 1CMP -

FOR : 1CMS -

FOR : 1CM3 -

FOR : 1CM5 -

FOR : 1CM7 -

FOR : 1CNA -

FOR : 1CN2 -

FOR : 1CN6 -

FOR : 1CN7 -

FOR : 1CN8 -

FOR : 1CR7 -

FOR : 1CS8 -

FOR : 1CS9 -

FOR : 1CT2 -

FOR : 1CU6 -

FOR : 1CVD -

FOR : 1CVV -

FOR : 1CVX -

FOR : 1CV8 -

FOR : 1CWA -

FOR : 1CWB -

FOR : 1CWG -

FOR : 1CXA -

FOR : 1CXB -

FOR : 1CXW -

FOR : 1CX1 -

FOR : 1CX3 -

FOR : 1CX4 -

FOR : 1CX6 -

FOR : 1CX7 -

FOR : 1CYA -

FOR : 1C2X -

FOR : 1C58 -

FOR : 1C6N -

FOR : 2CA9 -

FOR : 2CB9 -

FOR : 2CG9 -

FOR : 2CM4 -

FOR : 2CM5 -

FOR : 2CU3 -

FOR : 2CU5 -

FOR : 2CU6 -

FOR : 2CU9 -

FOR : 2CX2 -

It may be necessary to check the condition of the ancillaries battery.

NOTE : Identify the polarities of the ancillaries battery. If possible, reconnect the positive terminal then the negative terminal

2 - 3 - Check the spade terminals of the ancillaries battery

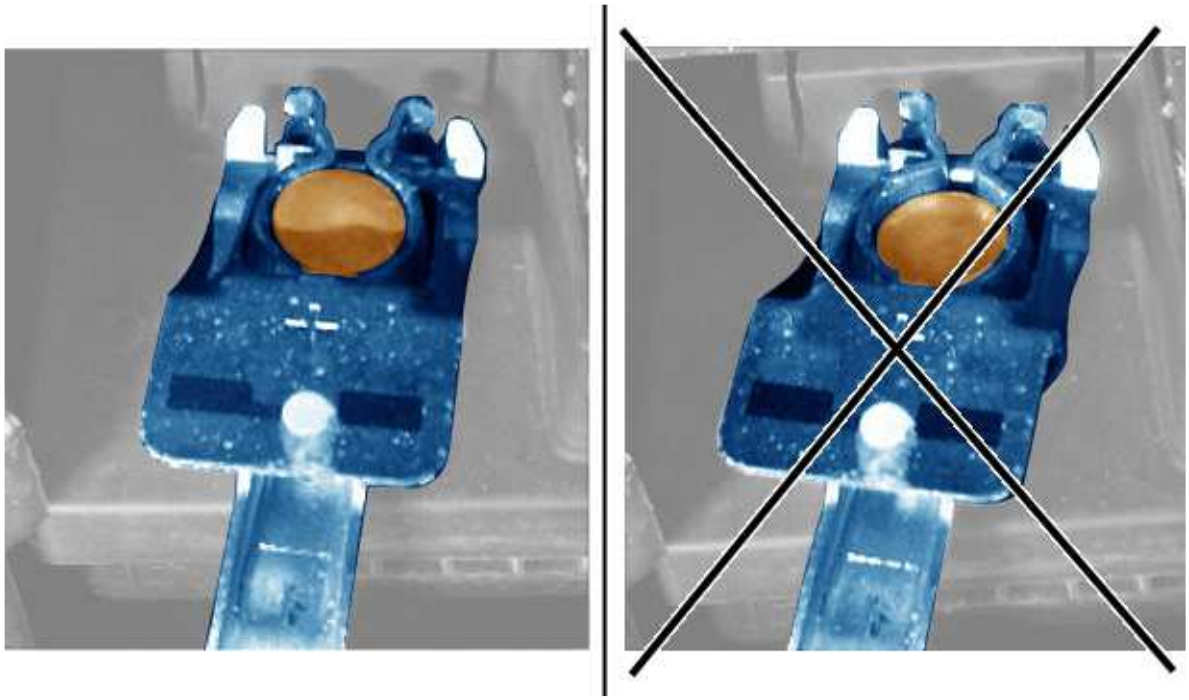

e2ak05kd

> **WARNING :** No one should be inside the passenger compartment during the reconnection of the ancillaries battery

Position the spade terminals of the ancillaries battery in contact with the base of the ancillaries battery terminals.

Check the locking of the ancillaries battery spade terminals.

2 - 4 - Switch on the ignition

> **WARNING :** Do not start the engine

Check that there are no error messages or error indicator lamps.

Analyse any faults and reset ; Using a diagnostic tool (if necessary).

2 - 5 - Restore the operation of the deactivated accesses

Restore the operation of the deactivated accesses.

> **NOTE :** Check the operation

2 - 6 - Observe the waiting time after reconnecting the ancillaries battery

Wait one minute after reconnecting the ancillaries battery.

> **NOTE :** For vehicles fitted with an automatic gearbox or piloted manual gearbox, wait 2

minutes

2 - 7 - Start the engine

Check that the engine starts without any difficulty.

2 - 8 - Check the initialisation of the accesses safety auto-reverse function

Check the correct operation of the following components and items :

- One-touch electric windows
- One-touch sunroofs
- One-touch blind

2 - 9 - Check the operation of the parking brake

For vehicles fitted with an electric parking brake, check that it is operating correctly by applying and releasing it.

2 - 10 - Switch off the ignition

Check that there are no error messages or error indicator lamps.

Analyse any faults and reset ; Using a diagnostic tool (if necessary).

2 - 11 - Check that the central closing operates

Press the buttons of the remote control several times to check its operation.

2 - 12 - Customer personalisation

Repair :

- The time
- The radio stations stored in the audio system
- The radio configuration

2 - 13 - Informing the customer

Inform the customer that certain functions may be temporarily unavailable due to reinitialisation :

- Stop function (stop and start)
- heating/ventilation
- Navigation

NEW VEHICLE PREPARATION : CHECKING THE ANCILLARIES (SERVICE) BATTERY - VEHICLES : CITROËN

ESSENTIAL : Observe the safety and cleanliness recommendations

Whatever its design, an ancillaries battery is subject to slow discharge while on stock, this owing to the following phenomena :

- Natural self-discharging of the ancillaries battery (4 % per month)
- Existence of permanent power consuming equipment as a result of the vehicle not having been inhibited by placing the shunt in the parc position

A regular re-charging of the ancillaries battery will keep its charge intact.

A voltage lower than the nominal voltage (around 12 Volts) corresponds to a critical level of discharge which can lead to the ancillaries battery suffering damage.

The handing over to the customer of a new vehicle fitted with an ancillaries battery that has been stored with its voltage lower than the nominal voltage often engenders problems that spell dissatisfaction to the Customer and cost to the Marque.

Check the state of charge of the ancillaries battery while it is on stock, when destocking and also during the New Vehicle Preparation (PDI), so as to prevent it from reaching the critical level of discharge.

1 - TOOLING

 *e3bd00ct*	Battery tester
 *e3bd00dt*	Voltmeter (*)

Only a battery tester can diagnose the general condition of the ancillaries battery, the tester diagnosing not only the state of charge of the ancillaries battery, but also its ability to be recharged.

SPECIAL FEATURE :

FOR : 1CA3 -

FOR : 1CA9 -

FOR : 1CB0 -

FOR : 1CB1 -

FOR : 1CB3 -

FOR : 1CB5 -

FOR : 1CB7 -

FOR : 1CB8 -

FOR : 1CB9 -

FOR : 1CE3 -

FOR : 1CH5 -

FOR : 1CLA -

FOR : 1CMC -

FOR : 1CMJ -

FOR : 1CMP -

FOR : 1CMS -

FOR : 1CM3 -

FOR : 1CM5 -

FOR : 1CM7 -

FOR : 1CNA -

FOR : 1CN8 -

FOR : 1CR7 -

FOR : 1CVV -

FOR : 1CWA -

FOR : 1CXA -

FOR : 1CXW -

FOR : 1CX6 -

FOR : 1CX7 -

FOR : 1CYA -

FOR : 1C58 -

FOR : 1C6N -

FOR : 2CA9 -

FOR : 2CB9 -

FOR : 2CG9 -

FOR : 2CM5 -

FOR : 2CU9 -

NOTE : The Marque requires you to use the MIDTRONICS PSA battery tester, allowing you either to obtain reimbursement for the recharging, or to replace the ancillaries battery via the SAGAI application

WARNING : Certain commercial battery testers that are not approved technically cannot deliver a reliable diagnosis if the check is performed remotely

WARNING : (*) Use of a voltmeter duly calibrated is tolerated in exceptional circumstances (A voltmeter only enables you to measure the ancillaries battery voltage. The voltmeter does not give you traceability of the checking of the ancillaries battery

2 - CHECKING THE STATE OF CHARGE OF THE ANCILLARIES BATTERY USING A BATTERY TESTER

2 - 1 - Definitions of the ancillaries battery charge status thresholds

Value displayed by the tester	Action
BATTERY OK	None
Battery requires charging	Recharge the ancillaries battery in accordance with the instructions given below
Battery must be replaced	Replace the ancillaries battery in accordance with the instructions given below
Battery in short-circuit	Replace the ancillaries battery in accordance with the instructions given below

2 - 2 - Recommended tools

Designation	make	Tool part numbers
Battery tester MIDTRONICS PSA	MIDTRONICS	EXPP-925
Battery tester + starter circuit check MIDTRONICS PSA	MIDTRONICS	EXPP-925E

Optional.

Designation	make	Tool part numbers
Printer for tester A088	MIDTRONICS	A088 or A089

3 - CHECKING THE STATE OF CHARGE OF THE ANCILLARIES BATTERY USING A VOLTMETER

> **WARNING :** To guarantee a reliable voltage reading, take the measurement on a vehicle at rest

3 - 1 - Definition of the vehicle rest required before reading the voltage

A vehicle is considered to be at rest either if it has remained untouched (its engine not started, its lamps not switched on, the display "READY" not showing in the instrument panel, etc.) for at least one hour prior to the checking of the voltage, or if it has gone through the procedure for being placed at rest as described below.

> **WARNING :** If accessing the ancillaries battery necessitates leaving one of the doors open, manually close the catch of the lock of the door involved, to decoy the electrical system

Procedure for placing the vehicle at rest :

- Switch on the headlamps for 2 minutes
- Switch off the headlamps
- Close the vehicle's doors and do not carry out any action for 10 minutes
- Check the voltage before starting the engine
- If the catch of the lock of the door involved has been manually closed, return it to the open position

3 - 2 - Definitions of the ancillaries battery voltage thresholds when at rest

Battery type Normal or EF	
Value of the voltage measured at rest	Action
Voltage greater than 12,4 V	None
Voltage between 12 V and 12,4 V	Recharge the ancillaries battery in accordance with the instructions given below
Voltage less than 12 V	Replace the ancillaries battery in accordance with the instructions given below

Battery type VRLA / AGM	
Value of the voltage measured at	

rest	Action
Voltage greater than 12,6 V	None
Voltage between 12 V and 12,6 V	Recharge the ancillaries battery in accordance with the instructions given below
Voltage less than 12 V	Replace the ancillaries battery in accordance with the instructions given below

3 - 3 - Recommended tools

WARNING : The Voltmeter used to check the battery must be calibrated at least 1 time per year

Designation	make	Tool part numbers
Digital multimeter with integral current measuring clip	FACOM	712
Digital multimeter	FACOM	714
Digital multimeter	SAM	FL-11
Digital multimeter	SAM	FL-12
Digital multimeter	SAM	FL-16

4 - RECHARGING THE SERVICE BATTERY

4 - 1 - Recommendations and instructions

ESSENTIAL : The 2 ancillaries battery terminals of the BERLINGO Electric vehicle must be disconnected before charging the ancillaries battery (see corresponding chapter)

WARNING : Recharging the ancillaries battery on the vehicle using tooling that does not meet the specifications described below may cause the destruction of the ECUs on the vehicle

The recharging must be carried out in a well-ventilated area.

Do not remove the ancillaries battery from the vehicle to recharge it.

The recharging of the ancillaries battery should be performed with it connected to the vehicle, using a battery charger meeting the following criteria (Types of battery Normal, "EF" or "VRLA / AGM") :

- Voltage limited to 16 V
- Adjustable maximum current
- Programmable or limited duration of charging
- Stopping of charging at a minimum current
- Safety from the risks of inverting the polarity
- Possibility to use the battery charger on a continuous basis

Specifications of the battery charger recommended by the manufacturer (MIDTRONICS PSA) :

- Battery diagnosis (At the start and at the finish of battery charging)
- Rapid charge (Less than 3 hours)
- Traceability for monitoring of the battery charging

NOTE : The range of use of the battery charger recommended by the manufacturer is between 20°C and 70°C

> **WARNING :** Keep to the correct sequence for connecting the battery charger cables on the terminals

Order of connection of the cables (Without disconnection of the terminal leads) :

- Connect the positive cable of the charger on the positive terminal of the ancillaries battery
- Connect the negative cable of the charger on the negative terminal of the ancillaries battery

NOTE : If the ancillaries battery has to be replaced, recharge the new ancillaries battery (of the correct Part No.) prior to fitting it on the vehicle

4 - 2 - Checking after the ancillaries battery has finished recharging

Once recharging of the ancillaries battery has been completed, check the voltage of the ancillaries battery on the vehicle, at rest.

If using a battery tester, check after recharging that the state of charge displayed by the battery tester is : "BATTERY OK".

> **WARNING :** If accessing the ancillaries battery necessitates leaving one of the doors open, manually close the catch of the lock of the door involved, to decoy the electrical system

If using a voltmeter, follow the procedure below :

- Switch on the headlamps for 2 minutes
- Switch off the headlamps
- Close the vehicle doors without locking them (Do not carry out any action for 10 minutes)
- Check the voltage of the ancillaries battery before starting the engine
- Check that the ancillaries battery voltage is greater than 12,8 V
- If the catch of the lock of the door involved has been manually closed, return it to the open position

5 - REPLACEMENT OF THE ANCILLARIES BATTERY

> **ESSENTIAL :** Observe the safety and cleanliness recommendations

Specifications of the replacement ancillaries battery :

- New ancillaries battery (of the correct Part No.) with the same specifications as the original ancillaries battery (Voltage ; Starting current ; Power capacity)
- Usage limit date later than the ancillaries battery replacement date

- Value displayed by the battery tester MIDTRONICS PSA : "BATTERY OK"
- Voltage higher than 12,4 V if using a voltmeter (Types of battery Normal, "EF" or "VRLA / AGM")
- Voltage higher than 12,6 V if using a voltmeter for battery type "VRLA / AGM"

After replacing or removing the ancillaries battery, carry out the operations below.

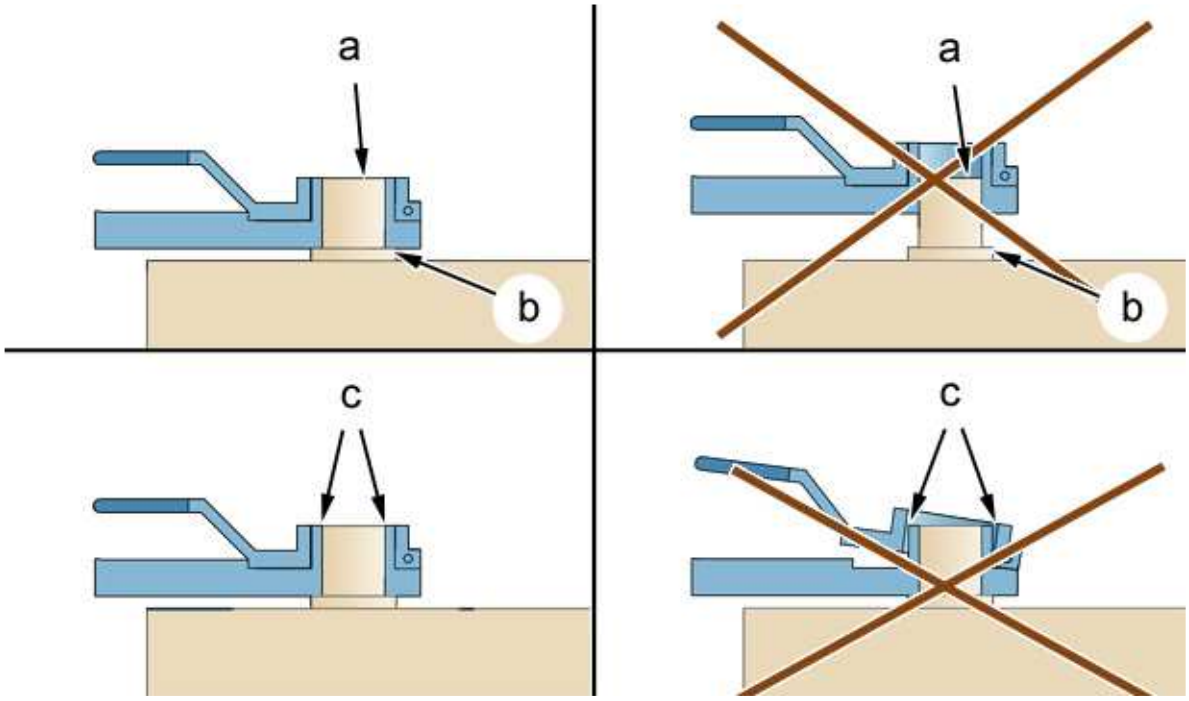

d1am001d

The spade terminals may be of the screw type or of the clip type, referred to as quick-fit spade terminals.

In all cases the method for connecting the ancillaries battery terminals is as follows :

- Open the terminal
- Position the spade terminal connector fully down on the ancillaries battery terminal
- Visually check that the connector is in contact with the base of the ancillaries battery terminal "b"
- Visually check that the connector is flush with the top of the ancillaries battery terminal "a"
- Lock the spade terminal by tightening the screw or by pressing on the lever until the stop "c" is reached
- Move the cable about so as to check that the spade terminal connector is securely held on the ancillaries battery terminal
- Perform the operations that are required following a reconnection of the ancillaries battery

6 - SPECIAL CASE : VEHICLE EQUIPPED WITH A SERVICE BATTERY CHARGE MONITORING UNIT

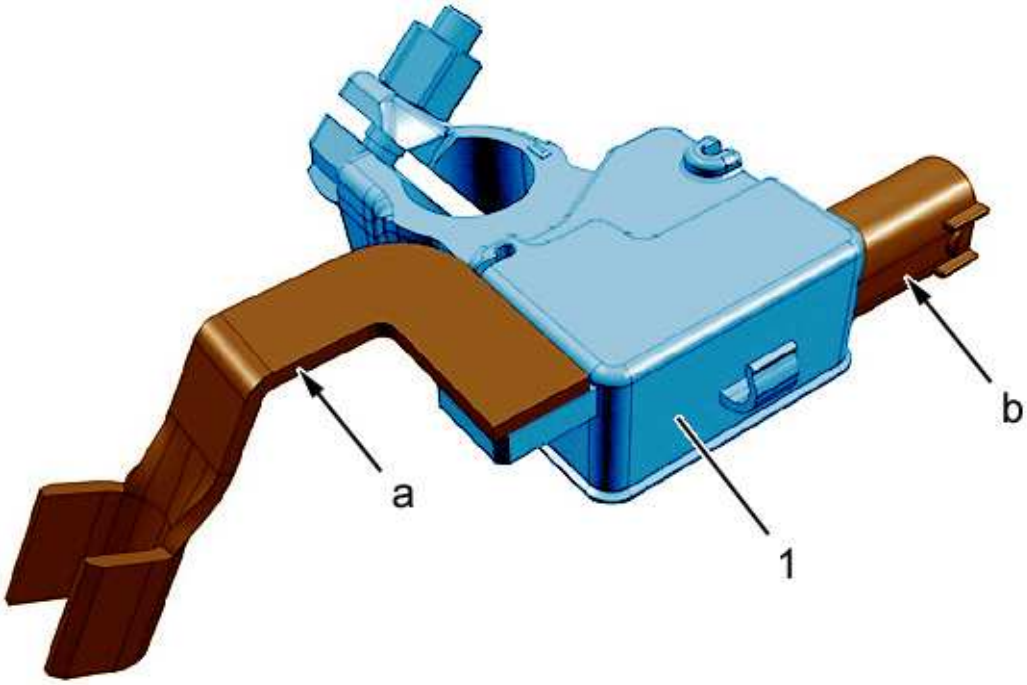

d4am02xd

(1) Ancillaries battery charge status control unit.

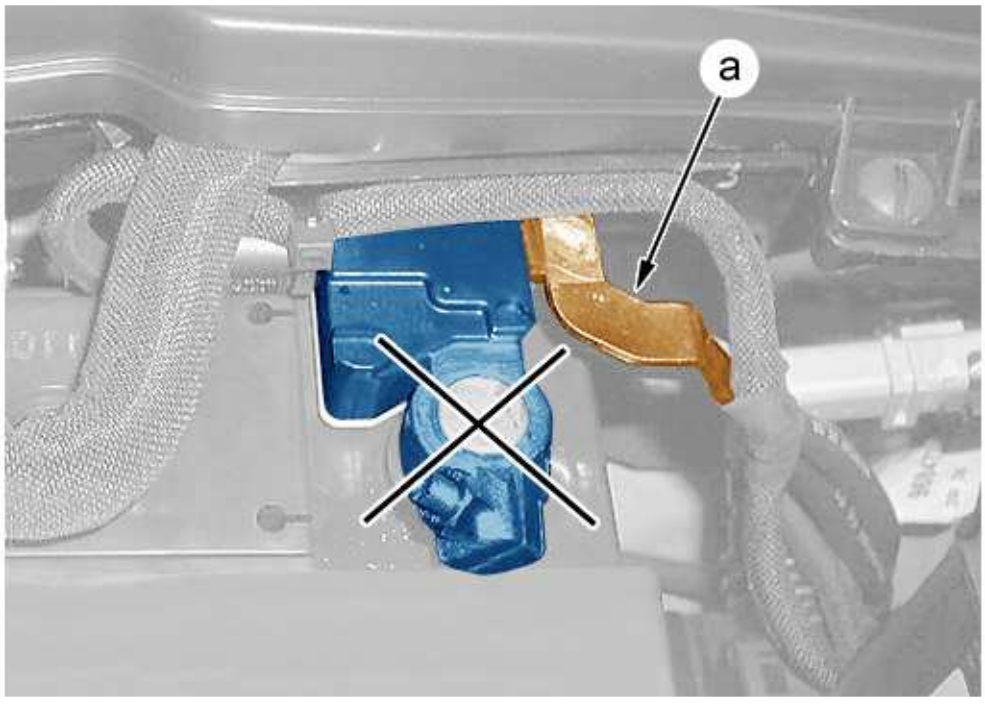

d1cq00td

WARNING : If connecting from an external battery charger : Do not connect directly on the negative terminal of the ancillaries battery ; Connect on the earth cable carrier crimped to the output of the battery check status control unit (at "a") (or on a body

earth nut)

WARNING : If removing the battery charge status control unit, when refitting use the correct tightening torque (0,6 m.daN) for connecting the connector of the battery charge status control unit on the negative terminal of the ancillaries battery ; Always connect the battery charge status unit black 2-way connector last (at "b")

Start the vehicle : The "battery" icon should go off.

Delete the fault codes.

7 - ACCESS FOR CHECKING AND RECHARGING THE ANCILLARIES BATTERY

7 - 1 - CITROËN C-ZERO

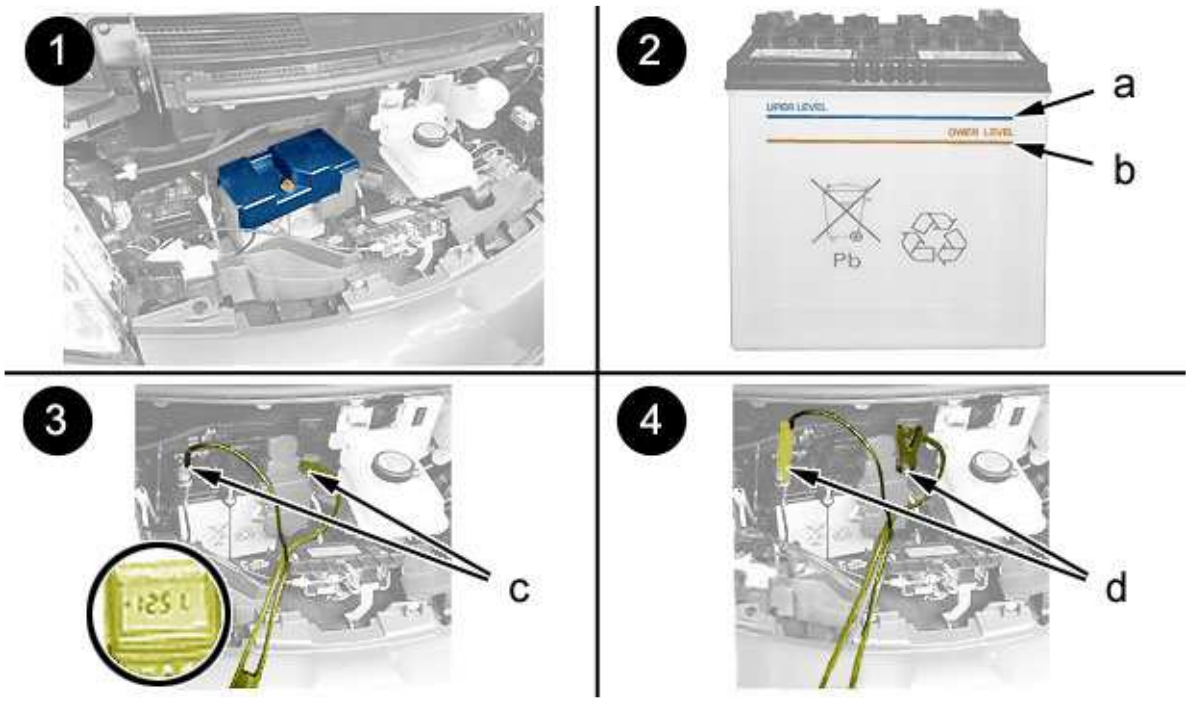

e3bd008d

Figure ① : Location of the ancillaries battery :

- The ancillaries battery is located under the bonnet
- The accessibility is protected by a battery cover

WARNING : If the fluid level is above the mark "upper level" "a", there is a risk of an electrolyte leak. If the fluid level is below the mark "lower level" "b", there is a risk of the ancillaries battery exploding while in use

Figure ② : Check the level of electrolyte in the ancillaries battery :

- Carefully undo the plastic screw of the battery cover
- Pull on the battery cover to remove it
- View the electrolyte filling level by looking at the ancillaries battery from the horizontal
- Check that the level is between the "upper level" "a" and the "lower level" "b"
- Top up, or remove excess electrolyte (if necessary)

Figure ③ : Checking the ancillaries battery using either a battery tester or a voltmeter :

- Carefully undo the plastic screw of the battery cover
- Pull on the battery cover to remove it
- Move the cover aside from the positive terminal of the ancillaries battery
- Check the state of charge of the ancillaries battery using either a battery tester or a voltmeter (the black probe on the negative terminal and the red probe on the positive terminal of the ancillaries battery) (at "c")
- Refit the ancillaries battery cover

> **ESSENTIAL :** Thoroughly clean the top of the ancillaries battery after charging, avoiding any contacts between the electrolyte and your skin. If there is contact, wash the exposed part of your body with copious amounts of clean water

Figure ④ : Recharging the service battery :

- Carefully undo the plastic screw of the battery cover
- Pull on the battery cover to remove it
- Disconnect the negative terminal of the service battery (Isolate the cable using an insulating cover)
- Disconnect the positive terminal of the ancillaries battery (Isolate the cable using an insulating cover)
- Connect a Marque-approved charger to the ancillaries battery at "d" (The black cable on the negative terminal and the red cable on the positive terminal)
- Using the approved charger, commence the recharging of the ancillaries battery, keeping to the manufacturer's instructions
- Reconnect the positive terminal of the ancillaries battery
- Reconnect the negative terminal of the service battery
- Refit the ancillaries battery cover

7 - 2 - CITROËN C1 (B0)

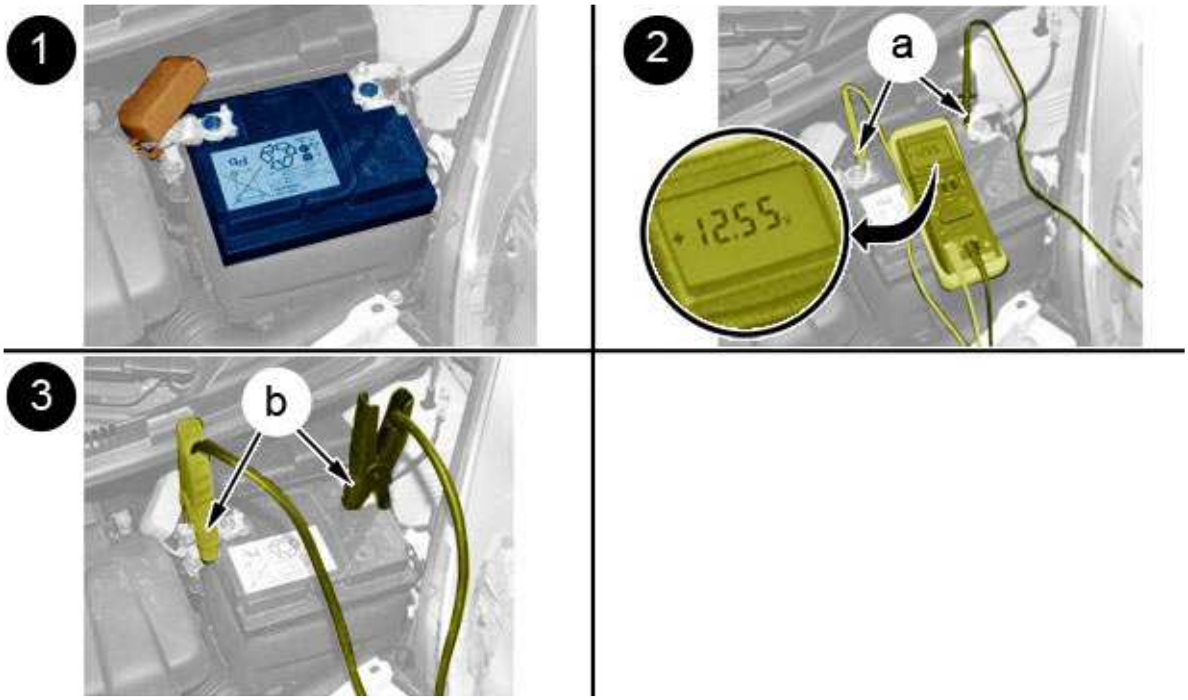

d1ad004d

Figure ① : Location of the ancillaries battery :

- The ancillaries battery is located under the bonnet
- Access is direct (no battery cover)

Figure ② : Checking the ancillaries battery using either a battery tester or a voltmeter :

- Move the cover aside from the positive terminal of the ancillaries battery
- Check the state of charge of the ancillaries battery using either a battery tester or a voltmeter (the black probe on the negative terminal and the red probe on the positive terminal of the ancillaries battery) (at "a")

Figure ③ : Recharging the service battery :

- Move the cover aside from the positive terminal of the ancillaries battery
- Connect a Marque-approved charger to the ancillaries battery at "b" (The black cable on the negative terminal and the red cable on the positive terminal of the ancillaries battery)
- Using the approved charger, commence the recharging of the ancillaries battery, keeping to the manufacturer's instructions

7 - 3 - CITROËN C1 (B3)

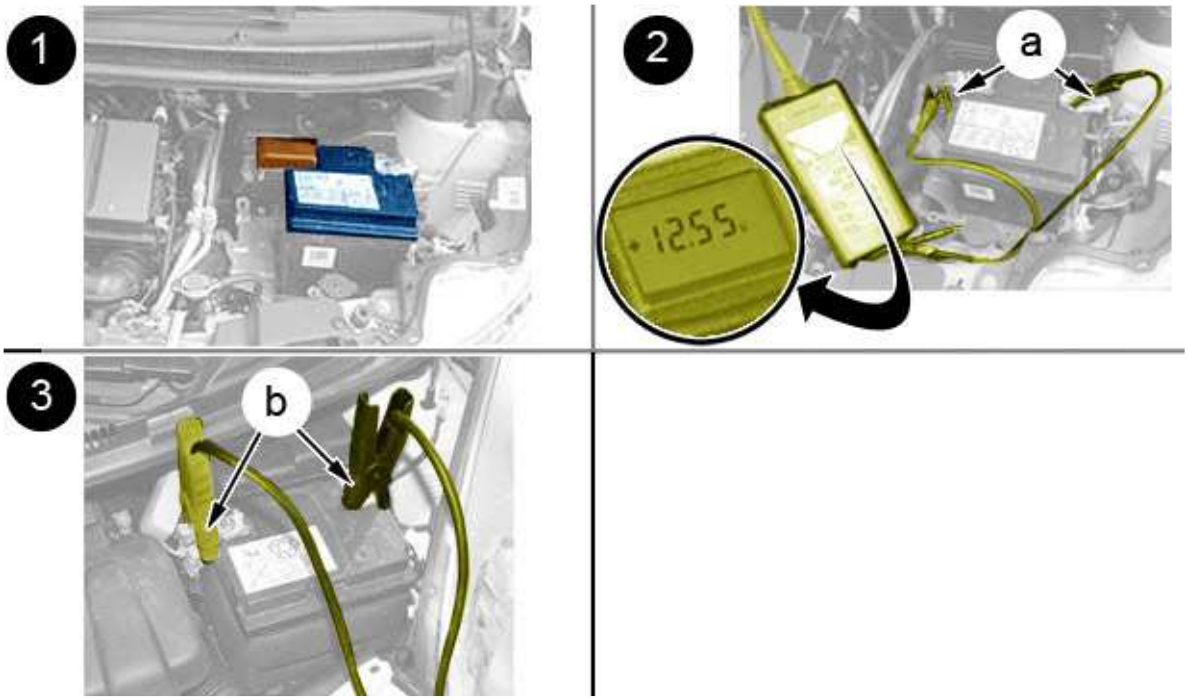

d1ab028d

Figure ① : Location of the ancillaries battery :

- The ancillaries battery is located under the bonnet
- Access is direct (no battery cover)

Figure ② : Checking the ancillaries battery using either a battery tester or a voltmeter :

- Move the cover aside from the positive terminal of the ancillaries battery
- Check the state of charge of the ancillaries battery using either a battery tester or a voltmeter (the black probe on the negative terminal and the red probe on the positive terminal of the ancillaries battery) (at "a")

Figure ③ : Recharging the service battery :

- Move the cover aside from the positive terminal of the ancillaries battery
- Connect a Marque-approved charger to the ancillaries battery at "b" (The black cable on the negative terminal and the red cable on the positive terminal of the ancillaries battery)
- Using the approved charger, commence the recharging of the ancillaries battery, keeping to the manufacturer's instructions
- Disconnect the charger

7 - 4 - CITROËN C3 (A8)

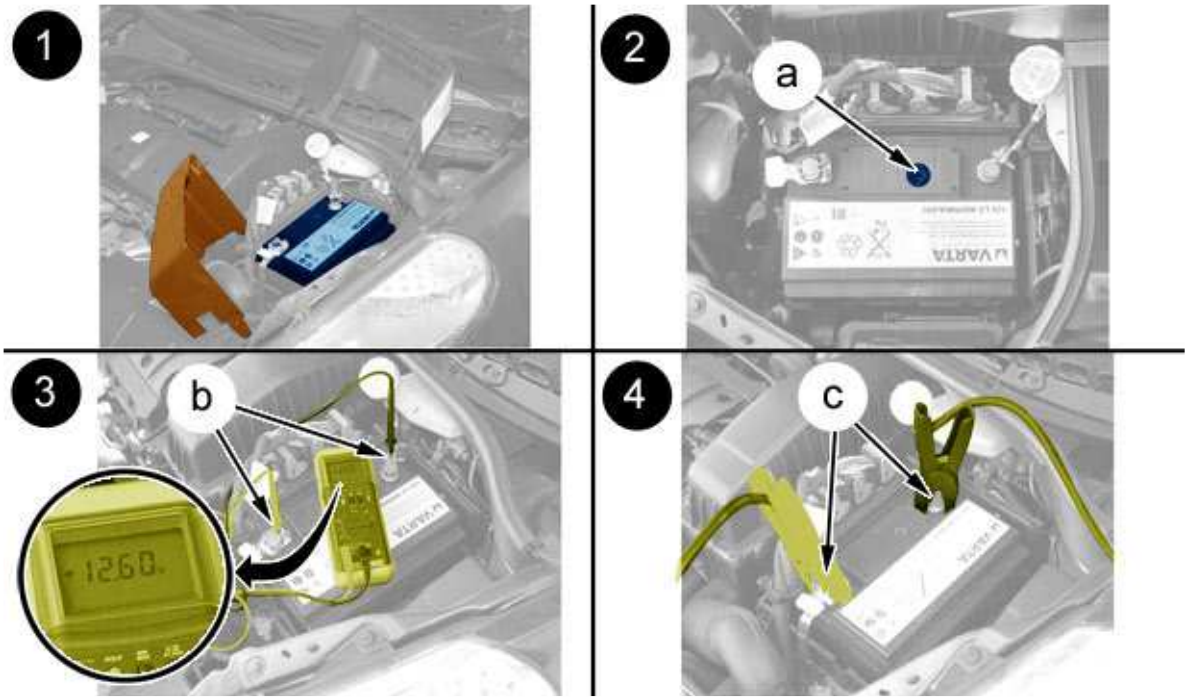

d1am004d

> **WARNING :** : Refit the ancillaries battery style cover before delivery of the vehicle to the customer

Figure ① : Location of the ancillaries battery :

- The ancillaries battery is located under the bonnet
- The ancillaries battery is protected by an ancillaries battery style cover

  NOTE : The ancillaries battery style cover is placed in the boot at the factory to make it easier to check and charge the ancillaries battery before delivery of the vehicle to the customer

Figure ② : Checking the ancillaries battery by reading the charge indicator "a" :

- Open the bonnet
- Remove the ancillaries battery style cover (If necessary)
- View the colour of the charge indicator "a" by looking at the ancillaries battery directly from above
- Refit the ancillaries battery style cover before delivery of the vehicle to the customer

Figure ② : Checking the ancillaries battery using either a battery tester or a voltmeter :

- Open the bonnet
- Remove the ancillaries battery style cover (If necessary)
- Check the state of charge of the ancillaries battery using either a battery tester or a voltmeter "b" (the black probe on the negative terminal and the red probe on the positive terminal of the ancillaries battery)
- Refit the ancillaries battery style cover before delivery of the vehicle to the customer

Figure ③ : Recharging the service battery :

- Open the bonnet
- Remove the ancillaries battery style cover (If necessary)
- Connect a Marque-approved charger to the ancillaries battery at "c" (the black cable on the remote earth and the red cable on the positive terminal)
- Using the approved charger, commence the recharging of the ancillaries battery, keeping to the manufacturer's instructions
- Disconnect the charger
- Refit the ancillaries battery style cover before delivery of the vehicle to the customer

7 - 5 - CITROËN C3 PICASSO - CITROËN C3 AIRCROSS - CITROËN C3 (A51) - CITROËN C3 (AI51) MERCOSUR - CITROËN DS3

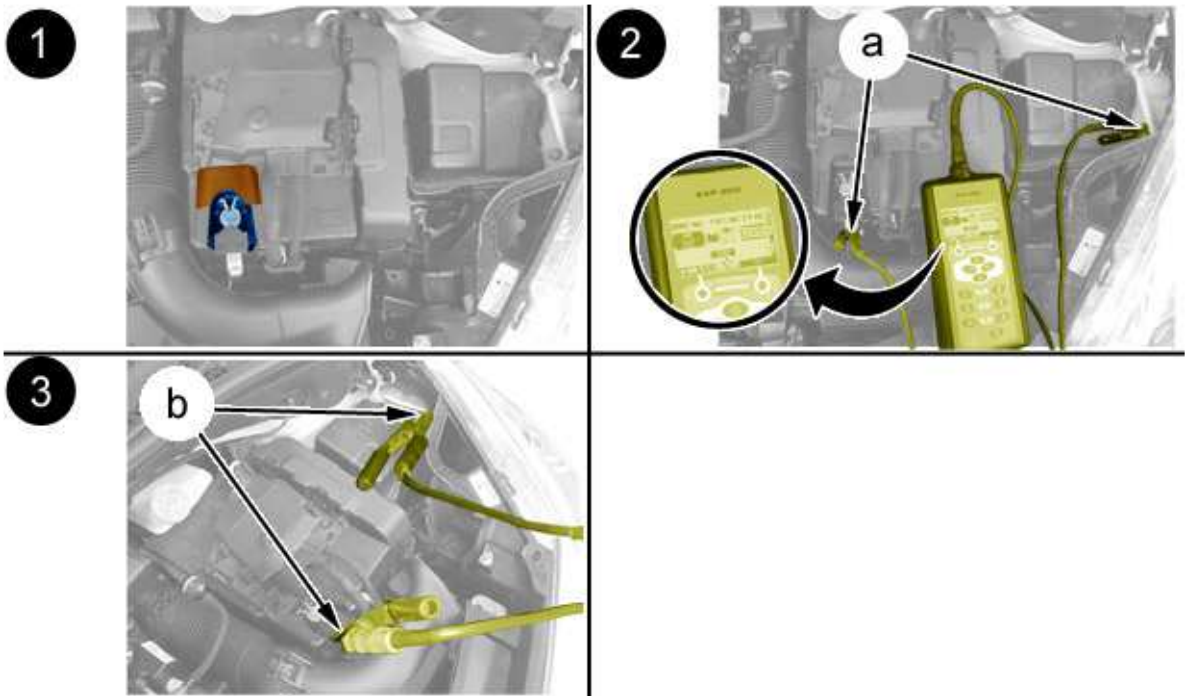

d1ab018d

Figure ① : Location of the ancillaries battery :

- The ancillaries battery is located under the bonnet
- The ancillaries battery is protected by a clip-on cover which is an access flap to the positive terminal
- A remote earth is located on the left-hand front panel

Figure ② : Checking the ancillaries battery using either a battery tester or a voltmeter :

- Open the flap to access the ancillaries battery positive terminal
- Check the ancillaries battery charge status using a battery tester or a voltmeter (the black probe on the remote earth and the red probe on the positive terminal of the ancillaries battery) (at "a")
- Close the flap for access to the positive spade terminal

Figure ③ : Recharging the service battery :

- Open the flap to access the ancillaries battery positive terminal
- Connect a Marque-approved charger to the ancillaries battery at "b" (the black cable on the remote earth and the red cable on the positive terminal)
- Using the approved charger, commence the recharging of the ancillaries battery, keeping to the manufacturer's instructions
- Disconnect the charger
- Close the flap for access to the positive spade terminal

7 - 6 - CITROËN C2 China

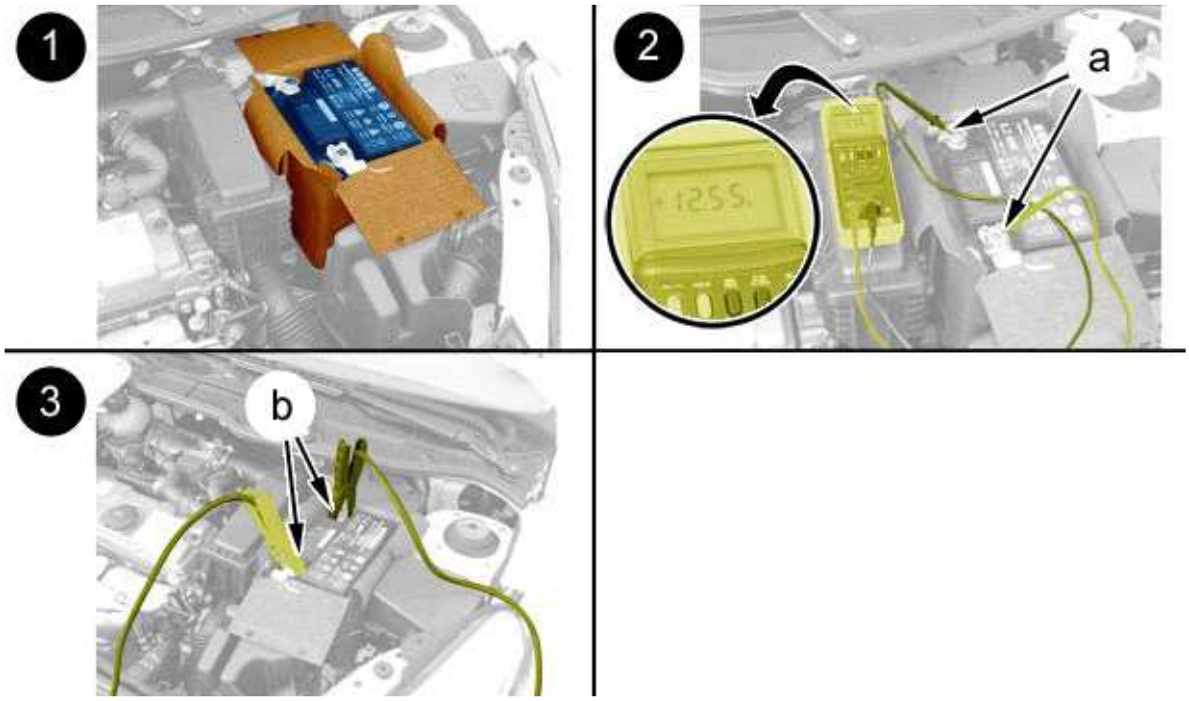

d1ad006d

Figure ① : Location of the ancillaries battery :

- The ancillaries battery is located under the bonnet
- The ancillaries battery is protected by a cover which can be opened

Figure ② : Checking the ancillaries battery using either a battery tester or a voltmeter :

- Open the ancillaries battery cover
- Check the state of charge of the ancillaries battery using either a battery tester or a voltmeter (the black probe on the negative terminal and the red probe on the positive terminal of the ancillaries battery) (at "a")
- Reclose the ancillaries battery protection cover

Figure ③ : Recharging the service battery :

- Open the ancillaries battery cover
- Connect a Marque-approved charger to the ancillaries battery at "b" (The black cable on the negative terminal and the red cable on the positive terminal)
- Using the approved charger, commence the recharging of the ancillaries battery, keeping to the manufacturer's instructions

- Disconnect the charger
- Reclose the ancillaries battery protection cover

7 - 7 - CITROËN C-ELYSÉE

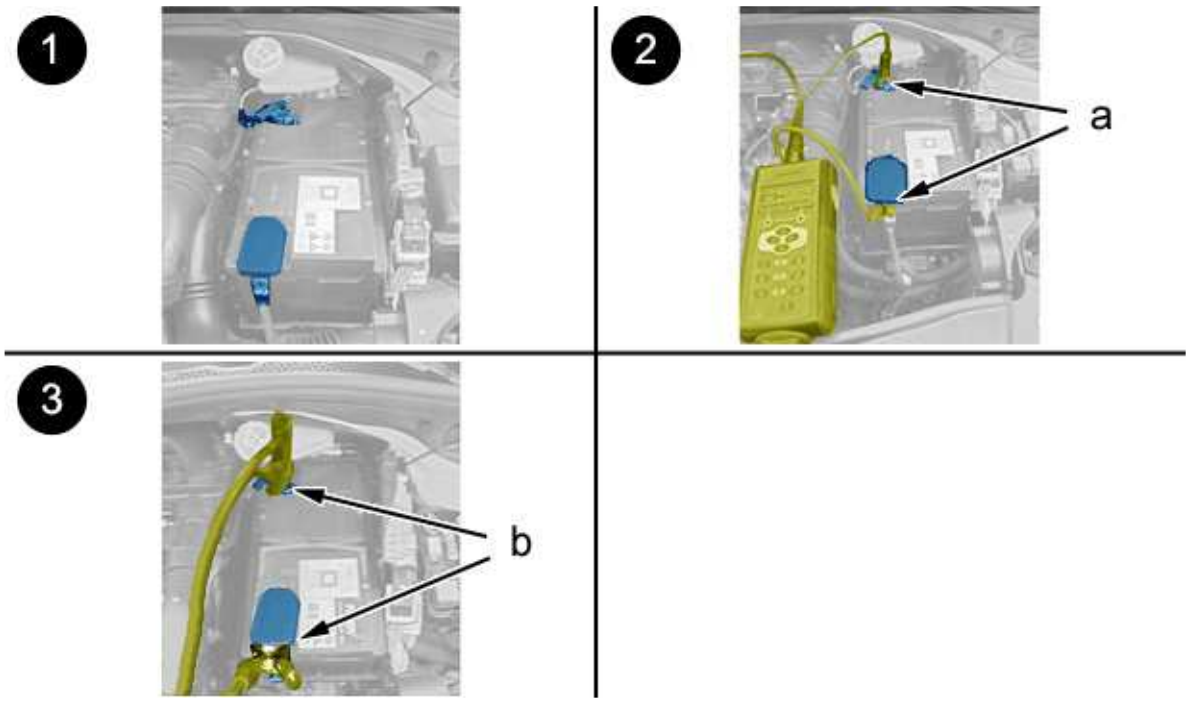

e3bd009d

Figure ① : Location of the ancillaries battery :

- The ancillaries battery is located under the bonnet
- Access is direct (no battery cover)

Figure ② : Checking the ancillaries battery using either a battery tester or a voltmeter :

- Move the cover aside from the positive terminal of the ancillaries battery
- Check the state of charge of the ancillaries battery using either a battery tester or a voltmeter (the black probe on the negative terminal and the red probe on the positive terminal of the ancillaries battery) (at "a")

Figure ③ : Recharging the service battery :

- Connect a Marque-approved charger to the ancillaries battery at "b" (The black cable on the negative terminal and the red cable on the positive terminal)
- Using the approved charger, commence the recharging of the ancillaries battery, keeping to the manufacturer's instructions
- Disconnect the charger

7 - 8 - CITROËN XSARA PICASSO

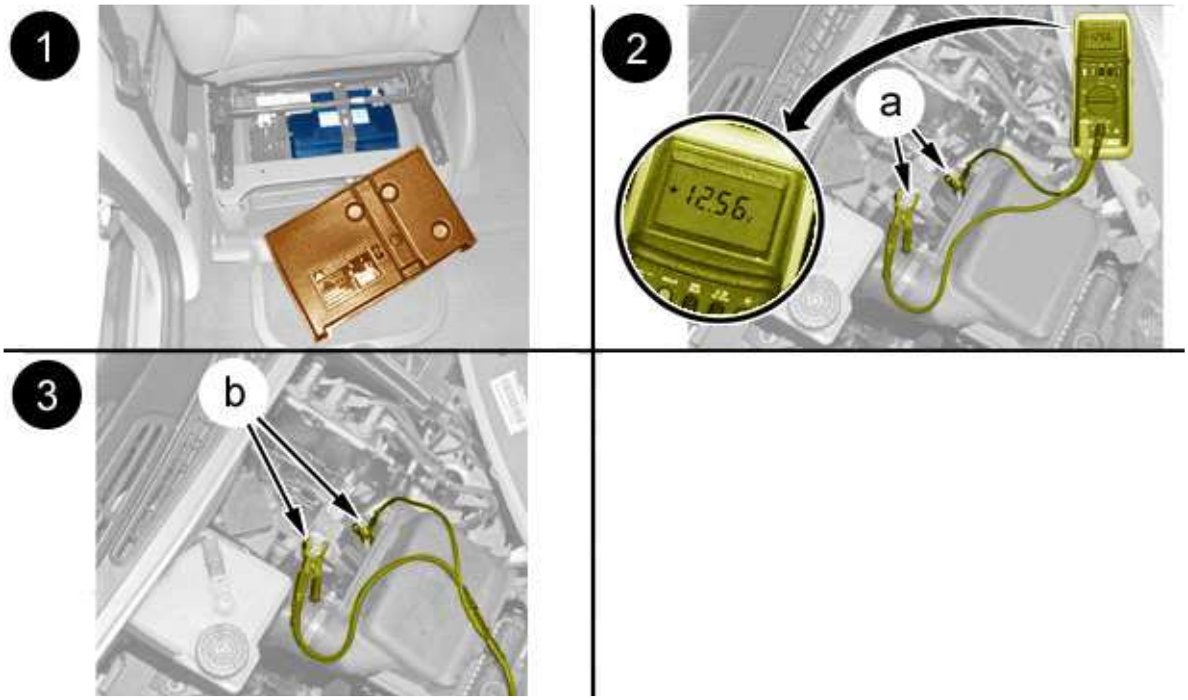

d1ad00od

Figure ① : Location of the ancillaries battery :

- The ancillaries battery is located under the driver's seat
- A remote terminal block (positive terminal and earth) is located under the bonnet

> **WARNING :** Do not use the earth that is behind the bonnet securing hook; this screw being painted, it cannot be used for checking the ancillaries battery

Figure ② : Checking the ancillaries battery using either a battery tester or a voltmeter :

- Open the flap for access to the remote positive terminal
- Check the state of charge of the ancillaries battery using either a battery tester or a voltmeter (the black probe on the remote earth and the red probe on the remote positive terminal) (at "a")
- Close the flap for access to the remote positive terminal

Figure ③ : Recharging the service battery :

- Open the flap for access to the remote positive terminal
- Connect a Marque-approved charger to the ancillaries battery at "b" (the black cable on the remote earth and the red cable on the remote positive terminal)
- Using the approved charger, commence the recharging of the ancillaries battery, keeping to the manufacturer's instructions
- Disconnect the charger
- Close the flap for access to the remote positive terminal

7 - 9 - CITROËN C-QUATRE - CITROËN C-TRIOMPHE - CITROËN C4 PALLAS - CITROËN C4 SEDAN

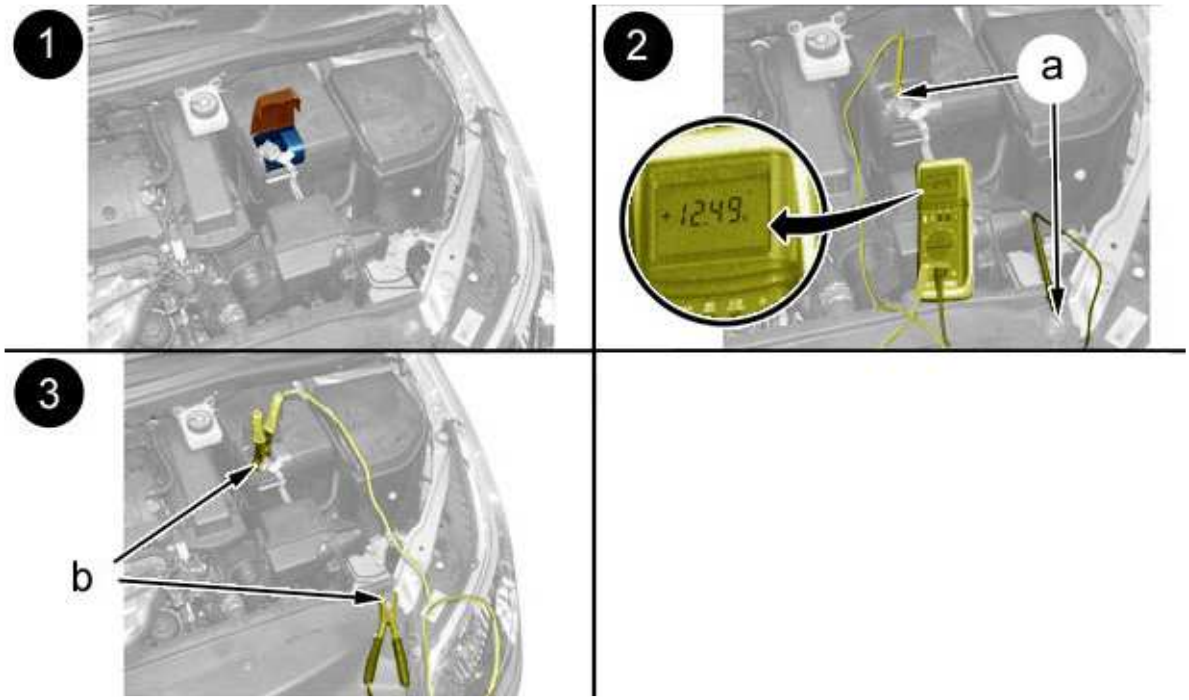

d1ad00pd

Figure ① : Location of the ancillaries battery :

- The ancillaries battery is located under the bonnet
- The ancillaries battery is protected by a clip-on cover which is an access flap to the positive terminal
- A remote earth is located on the left-hand front panel

Figure ② : Checking the ancillaries battery using either a battery tester or a voltmeter :

- Open the flap to access the ancillaries battery positive terminal
- Check the ancillaries battery charge status using a battery tester or a voltmeter (the black probe on the remote earth and the red probe on the positive terminal of the ancillaries battery) (at "a")
- Close the flap for access to the positive spade terminal

Figure ③ : Recharging the service battery :

- Open the flap to access the ancillaries battery positive terminal
- Connect a Marque-approved charger to the ancillaries battery at "b" (the black cable on the remote earth and the red cable on the positive terminal)
- Using the approved charger, commence the recharging of the ancillaries battery, keeping to the manufacturer's instructions
- Disconnect the charger
- Close the flap for access to the positive spade terminal

7 - 10 - CITROËN C4 (B71) - CITROËN DS4 - CITROËN DS5 (B81) - CITROËN C4 L (B7R) - CITROËN C4 L (B73) - CITROËN C4 Lounge (B7M)

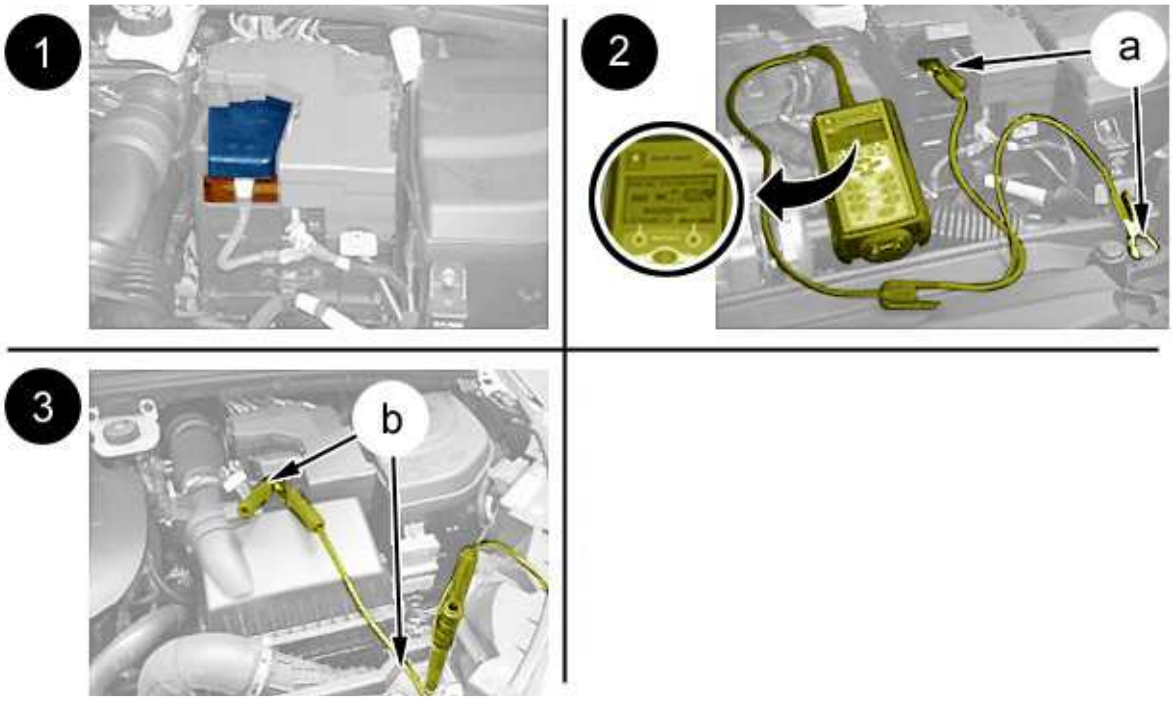

d1ad00ud

Figure ① : Location of the ancillaries battery :

- The ancillaries battery is located under the bonnet
- The ancillaries battery is protected by a clip-on cover which is an access flap to the positive terminal
- A remote earth is located on the left-hand front panel

Figure ② : Checking the ancillaries battery using either a battery tester or a voltmeter :

- Open the flap to access the ancillaries battery positive terminal
- Check the ancillaries battery charge status using a battery tester or a voltmeter (the black probe on the remote earth and the red probe on the positive terminal of the ancillaries battery) (at "a")
- Close the flap for access to the positive spade terminal

Figure ③ : Recharging the service battery :

- Open the flap to access the ancillaries battery positive terminal
- Connect a Marque-approved charger to the ancillaries battery at "b" (the black cable on the remote earth and the red cable on the positive terminal)
- Using the approved charger, commence the recharging of the ancillaries battery, keeping to the manufacturer's instructions
- Disconnect the charger
- Close the flap for access to the positive spade terminal

7 - 11 - CITROËN C4 CACTUS

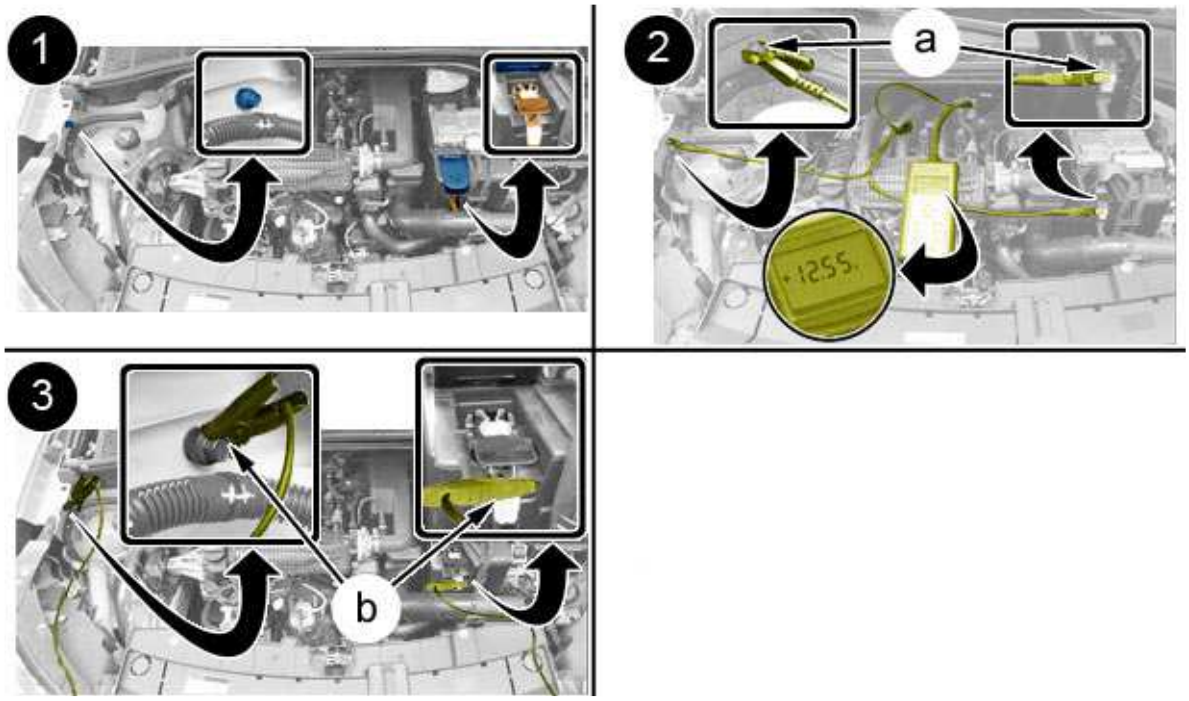

d1ab029d

Figure ① : Location of the ancillaries battery :

- The ancillaries battery is located under the bonnet
- The ancillaries battery is protected by a clip-on cover which is an access flap to the positive terminal
- A remote earth is installed on the front right front panel

Figure ② : Checking the ancillaries battery using either a battery tester or a voltmeter :

- Open the flap to access the ancillaries battery positive terminal
- Check the ancillaries battery charge status using a battery tester or a voltmeter (the black probe on the remote earth and the red probe on the positive terminal of the ancillaries battery) (at "a")
- Close the flap for access to the positive spade terminal

Figure ③ : Recharging the service battery :

- Open the flap to access the ancillaries battery positive terminal
- Connect a Marque-approved charger to the ancillaries battery at "b" (the black cable on the remote earth and the red cable on the positive terminal)
- Using the approved charger, commence the recharging of the ancillaries battery, keeping to the manufacturer's instructions
- Disconnect the charger
- Close the flap for access to the positive spade terminal

7 - 12 - CITROËN C4 PICASSO (B58)

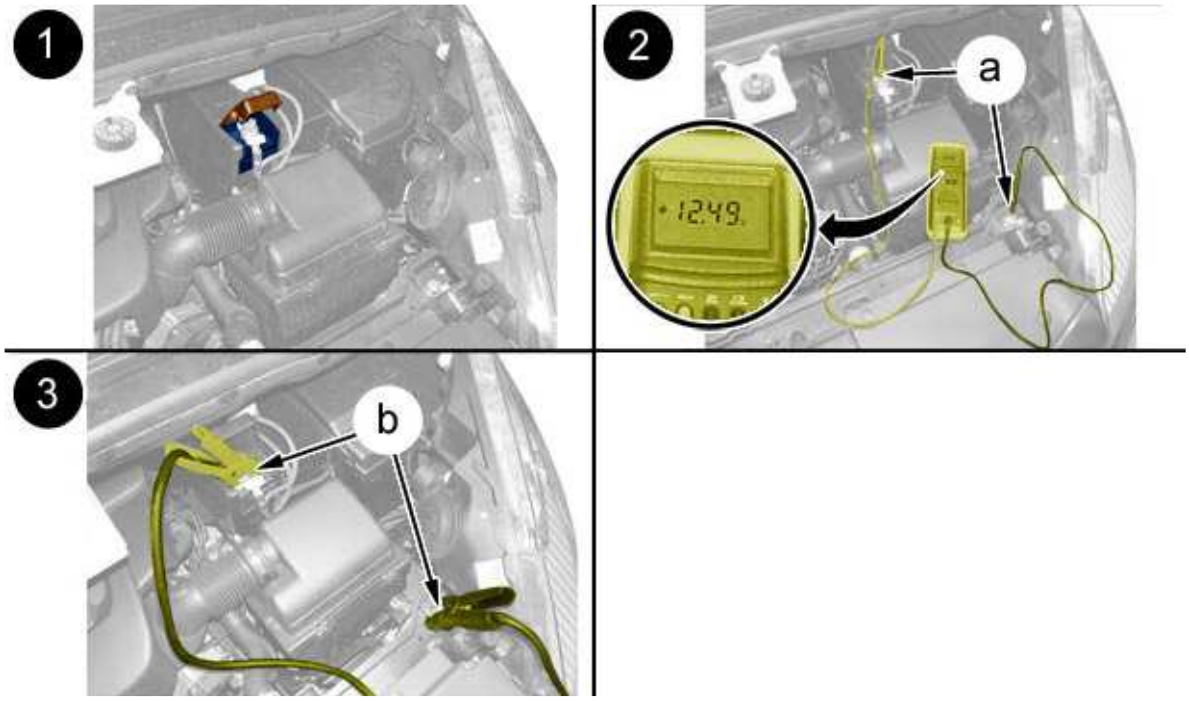

d1ad00qd

Figure ① : Location of the ancillaries battery :

- The ancillaries battery is located under the bonnet
- The ancillaries battery is protected by a clip-on cover which is an access flap to the positive terminal
- A remote earth is located on the left-hand front panel

Figure ② : Checking the ancillaries battery using either a battery tester or a voltmeter :

- Open the flap to access the ancillaries battery positive terminal
- Check the ancillaries battery charge status using a battery tester or a voltmeter (the black probe on the remote earth and the red probe on the positive terminal of the ancillaries battery) (at "a")
- Close the flap for access to the positive spade terminal

Figure ③ : Recharging the service battery :

- Open the flap to access the ancillaries battery positive terminal
- Connect a Marque-approved charger to the ancillaries battery at "b" (the black cable on the remote earth and the red cable on the positive terminal)
- Using the approved charger, commence the recharging of the ancillaries battery, keeping to the manufacturer's instructions
- Disconnect the charger
- Close the flap for access to the positive spade terminal

7 - 13 - CITROËN C4 PICASSO (B78)

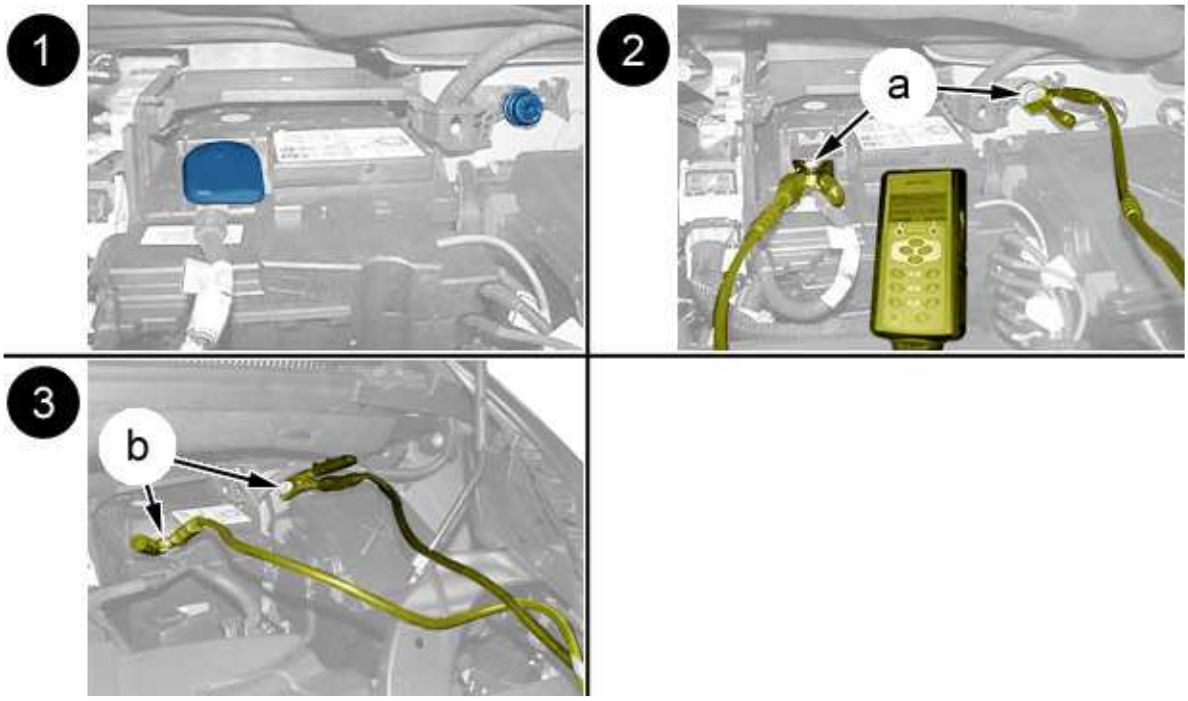

d1ad020d

Figure ① : Location of the ancillaries battery :

- The ancillaries battery is located under the bonnet
- The ancillaries battery is protected by a clip-on cover which is an access flap to the positive terminal
- A remote earth is located on the bulkhead on the left-hand side

Figure ② : Checking the ancillaries battery using either a battery tester or a voltmeter :

- Connect the battery tester or the voltmeter (The black cable on the remote earth and the red cable on the positive terminal under the protective cover)
- Check the ancillaries battery charge status using a battery tester or a voltmeter (the black probe on the remote earth and the red probe on the positive terminal of the ancillaries battery) (at "a")

Figure ③ : Recharging the service battery :

- Connect a Marque-approved charger to the ancillaries battery at "b" (The black cable on the remote earth and the red cable on the positive terminal under the protective cover)
- Using the approved charger, commence the recharging of the ancillaries battery, keeping to the manufacturer's instructions
- Disconnect the charger

7 - 14 - CITROËN C5 (except 2,7 HDi)

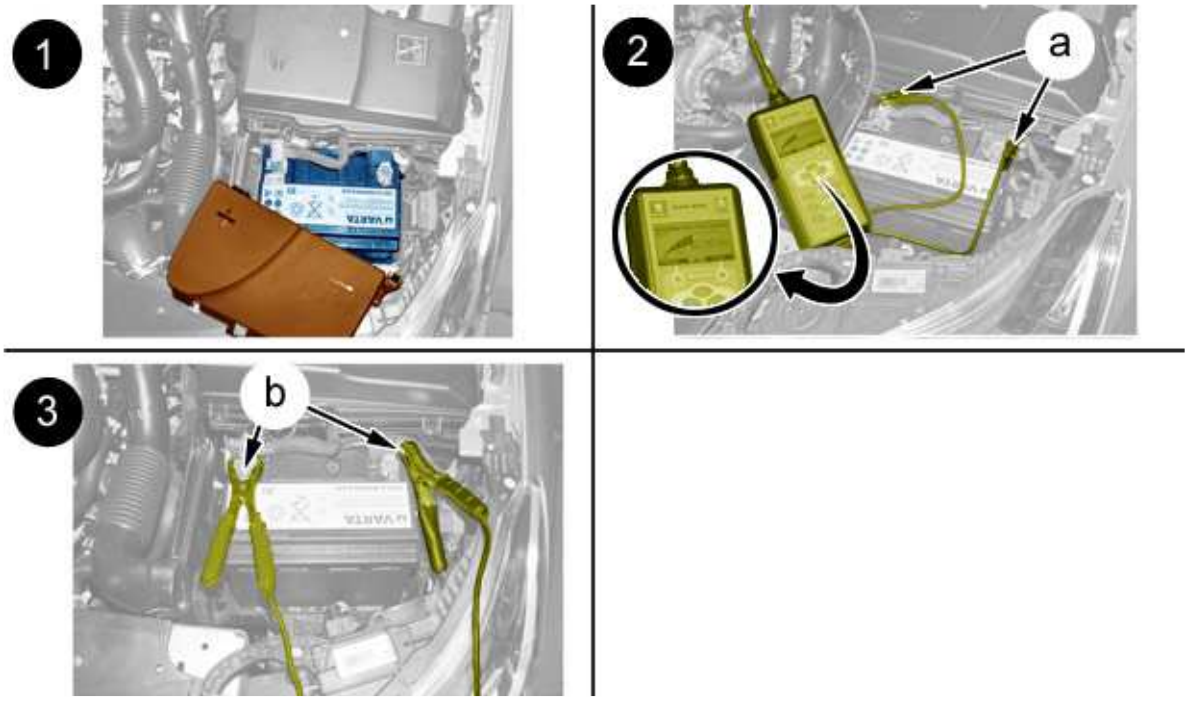

d1ad00rd

Figure ① : Location of the ancillaries battery :

- The ancillaries battery is located under the bonnet
- The ancillaries battery is protected by a clip-on cover

Figure ② : Checking the ancillaries battery using either a battery tester or a voltmeter :

- Remove the ancillaries battery style cover
- Check the state of charge of the ancillaries battery using either a battery tester or a voltmeter (the black probe on the negative terminal and the red probe on the positive terminal of the ancillaries battery) (at "a")
- Refit the ancillaries battery cover

Figure ③ : Recharging the service battery :

- Remove the ancillaries battery style cover
- Connect a Marque-approved charger to the ancillaries battery at "b" (The black cable on the negative terminal and the red cable on the positive terminal)
- Using the approved charger, commence the recharging of the ancillaries battery, keeping to the manufacturer's instructions
- Disconnect the charger
- Refit the ancillaries battery cover

7 - 15 - CITROËN C5 (2,7 HDi)

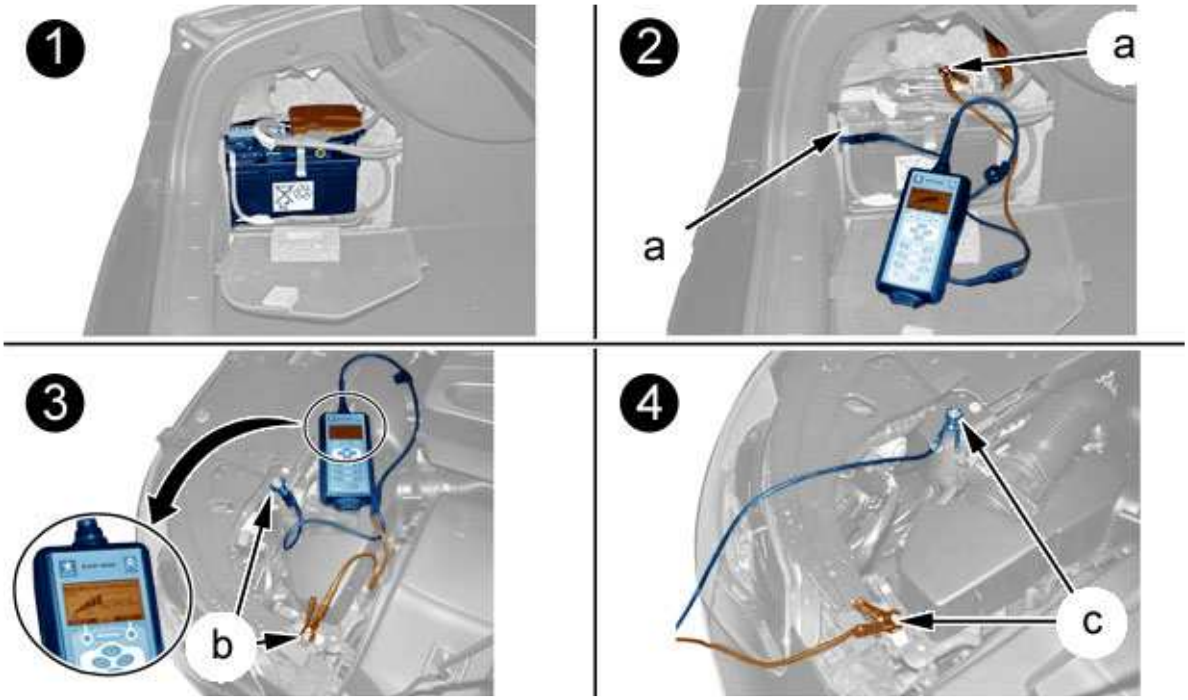

d1am03ud

Figure ① : Location of the ancillaries battery :

- The ancillaries battery is located in the boot, behind the left-hand side trim
- The flap gives you access to the ancillaries battery positive terminal
- A remote terminal block (positive terminal and earth) is located under the bonnet

Figure ② : Checking the ancillaries battery using either a battery tester or a voltmeter (At the battery terminals) (at "a") :

- Remove the ancillaries battery access flap
- Check the state of charge of the ancillaries battery using either a battery tester or a voltmeter (the black probe on the negative terminal and the red probe on the positive terminal of the ancillaries battery)
- Refit the ancillaries battery access flap

NOTE : Unclip the headlamp cover to make access to the remote earth easier

Figure ③ : Checking the ancillaries battery using either a battery tester or a voltmeter :

- Open the flap for access to the remote positive terminal
- Check the state of charge of the ancillaries battery using either a battery tester or a voltmeter (the black probe on the remote earth and the red probe on the remote positive terminal) (at "b")
- Close the flap for access to the remote positive terminal

Figure ④ : Recharging the service battery :

- Open the flap for access to the remote positive terminal
- Connect a Marque-approved charger to the ancillaries battery at "c" (the black cable on the remote earth and the red cable on the remote positive terminal)
- Using the approved charger, commence the recharging of the ancillaries battery, keeping to the

manufacturer's instructions
- Disconnect the charger
- Close the flap for access to the remote positive terminal

7 - 16 - CITROËN C6

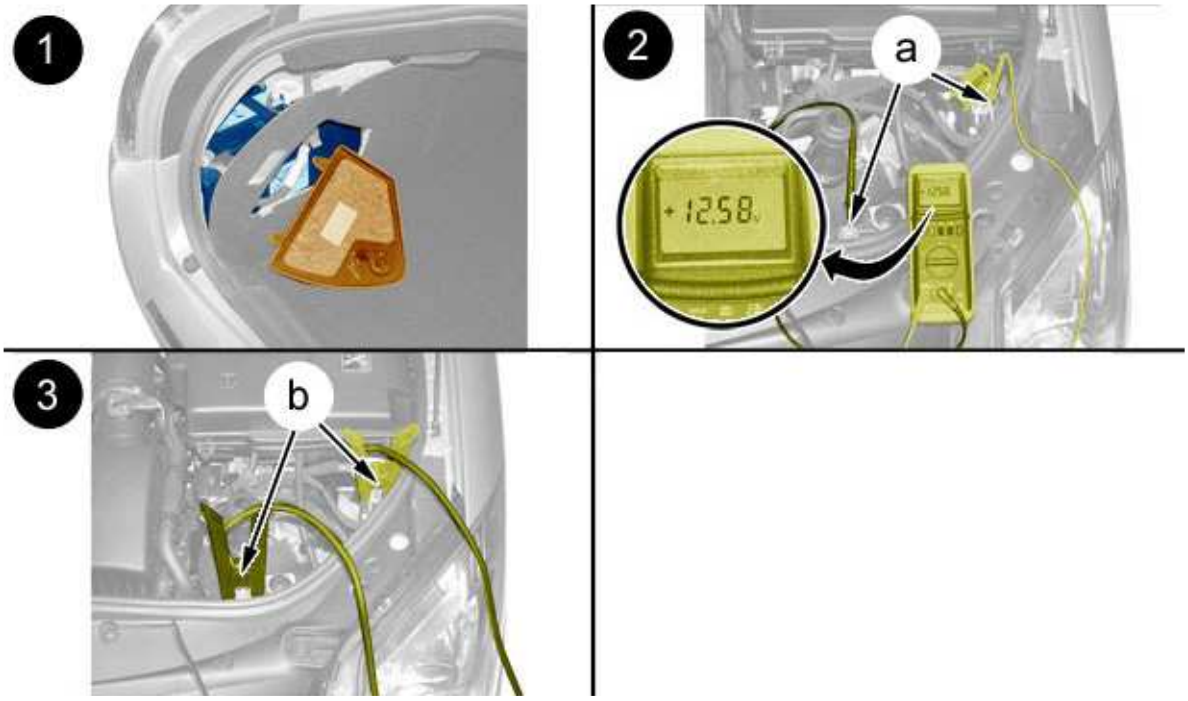

d1ad00sd

Figure ① : Location of the ancillaries battery :

- The ancillaries battery is located in the boot, behind the left-hand side trim
- The flap gives you access to the ancillaries battery positive terminal
- A remote terminal block (positive terminal and earth) is located under the bonnet

Figure ② : Checking the ancillaries battery using either a battery tester or a voltmeter :

- Open the flap for access to the remote positive terminal
- Check the state of charge of the ancillaries battery using either a battery tester or a voltmeter (the black probe on the remote earth and the red probe on the remote positive terminal) (at "a")
- Close the flap for access to the remote positive terminal

Figure ③ : Recharging the service battery :

- Open the flap for access to the remote positive terminal
- Connect a Marque-approved charger to the ancillaries battery at "b" (the black cable on the remote earth and the red cable on the remote positive terminal)
- Using the approved charger, commence the recharging of the ancillaries battery, keeping to the manufacturer's instructions
- Disconnect the charger
- Close the flap for access to the remote positive terminal

7 - 17 - CITROËN C8 - CITROEN DISPATCH 3

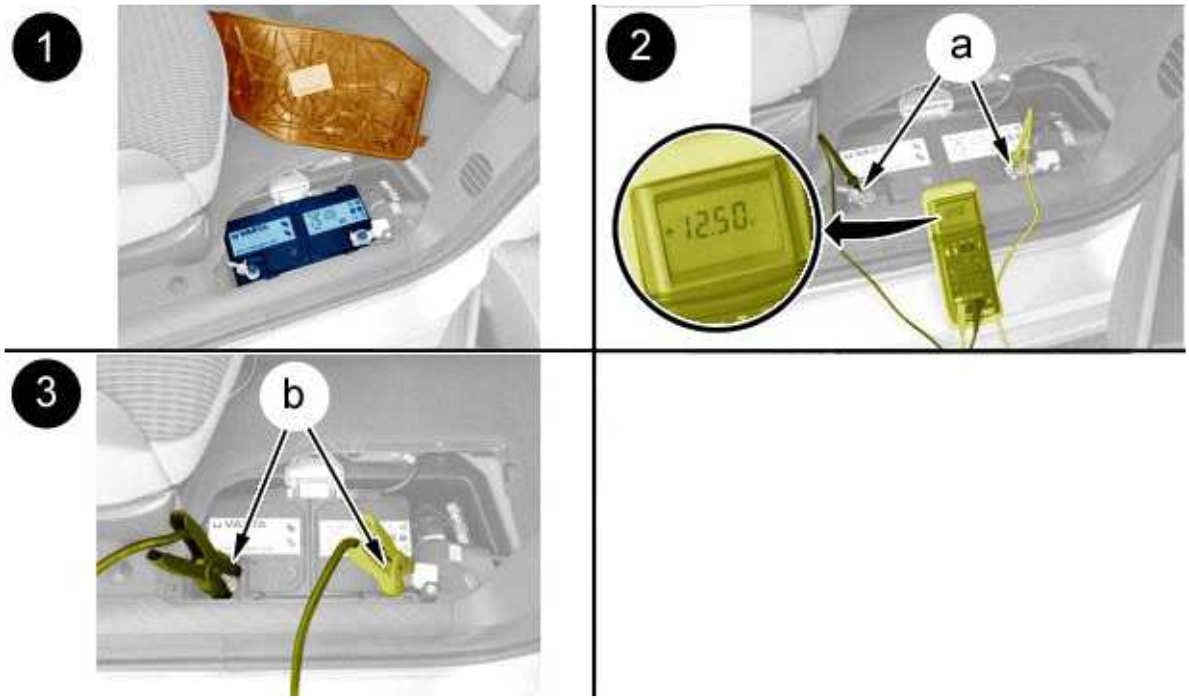

d1ad00dd

Figure ① : Location of the ancillaries battery : The ancillaries battery is located in the passenger footwell.

Figure ② : Checking the ancillaries battery using either a battery tester or a voltmeter :

- Remove the ancillaries battery access flap (If necessary, remove the mat)
- Check the state of charge of the ancillaries battery using either a battery tester or a voltmeter (the black probe on the negative terminal and the red probe on the positive terminal of the ancillaries battery) (at "a")
- Refit the ancillaries battery access flap (If necessary, refit the mat)

Figure ③ : Recharging the service battery :

- Remove the ancillaries battery access flap (If necessary, remove the mat)
- Connect a Marque-approved charger to the ancillaries battery at "b" (The black cable on the negative terminal and the red cable on the positive terminal)
- Using the approved charger, commence the recharging of the ancillaries battery, keeping to the manufacturer's instructions
- Disconnect the charger
- Refit the ancillaries battery access flap (If necessary, refit the mat)

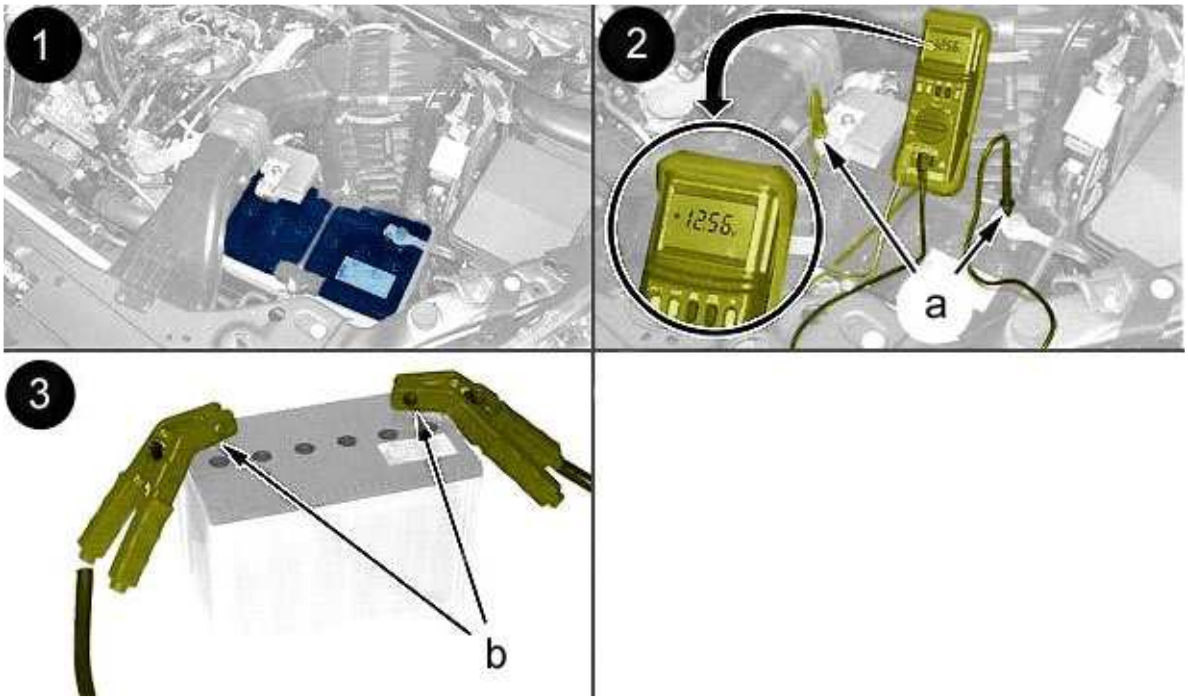

d1ad00ed

Figure ① : Location of the ancillaries battery : The ancillaries battery is located under the bonnet.

Figure ② : Checking the ancillaries battery using either a battery tester or a voltmeter :

- Remove the ancillaries battery style cover
- Check the state of charge of the ancillaries battery using either a battery tester or a voltmeter (the black probe on the negative terminal and the red probe on the positive terminal of the ancillaries battery) (at "a")
- Refit the ancillaries battery cover

> **ESSENTIAL :** Thoroughly clean the top of the ancillaries battery after charging, avoiding any contacts between the electrolyte and your skin. If there is contact, wash the exposed part of your body with copious amounts of clean water

Figure ③ : Recharging the service battery :

- Remove the air intake line
- Remove the ancillaries battery
- Connect a Marque-approved charger to the ancillaries battery at "b" (The black cable on the negative terminal and the red cable on the positive terminal)
- Using the approved charger, commence the recharging of the ancillaries battery, keeping to the manufacturer's instructions (Do a charge to a tenth of the capacity of the ancillaries battery)
- Disconnect the charger
- Clean the top of the ancillaries battery
- Refit the ancillaries battery
- Refit the air intake line

7 - 19 - CITROËN NEMO (Except engine with EURO 5 emission control standard or 1.3 HDi engine with

Stop and Start)

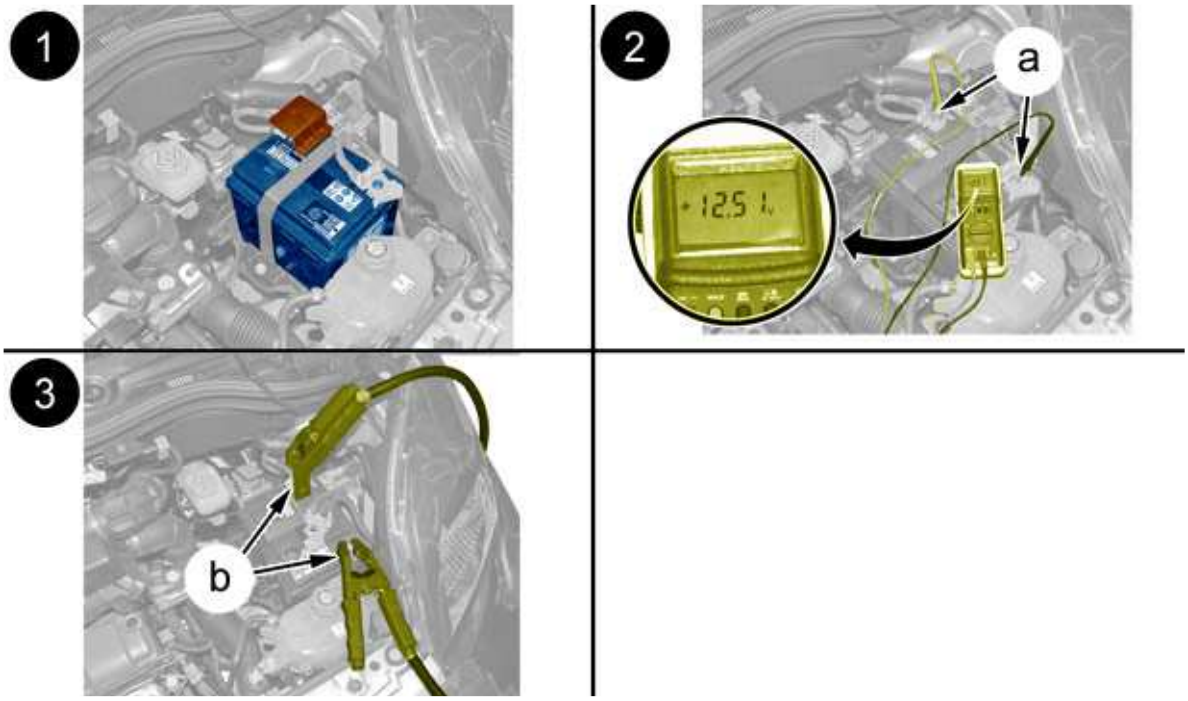

d1ad00fd

Figure ① : Location of the ancillaries battery :

- The ancillaries battery is located under the bonnet
- Access is direct (no battery cover)

Figure ② : Checking the ancillaries battery using either a battery tester or a voltmeter :

- Move the cover aside from the positive terminal of the ancillaries battery
- Check the state of charge of the ancillaries battery using either a battery tester or a voltmeter (the black probe on the negative terminal and the red probe on the positive terminal of the ancillaries battery) (at "a")

Figure ③ : Recharging the service battery :

- Move the cover aside from the positive terminal of the ancillaries battery
- Connect a Marque-approved charger to the ancillaries battery at "b" (The black cable on the negative terminal and the red cable on the positive terminal)
- Using the approved charger, commence the recharging of the ancillaries battery, keeping to the manufacturer's instructions
- Disconnect the charger

7 - 20 - CITROËN NEMO (Engine with EURO 5 emission control standard or 1.3 HDi engine with Stop and Start)

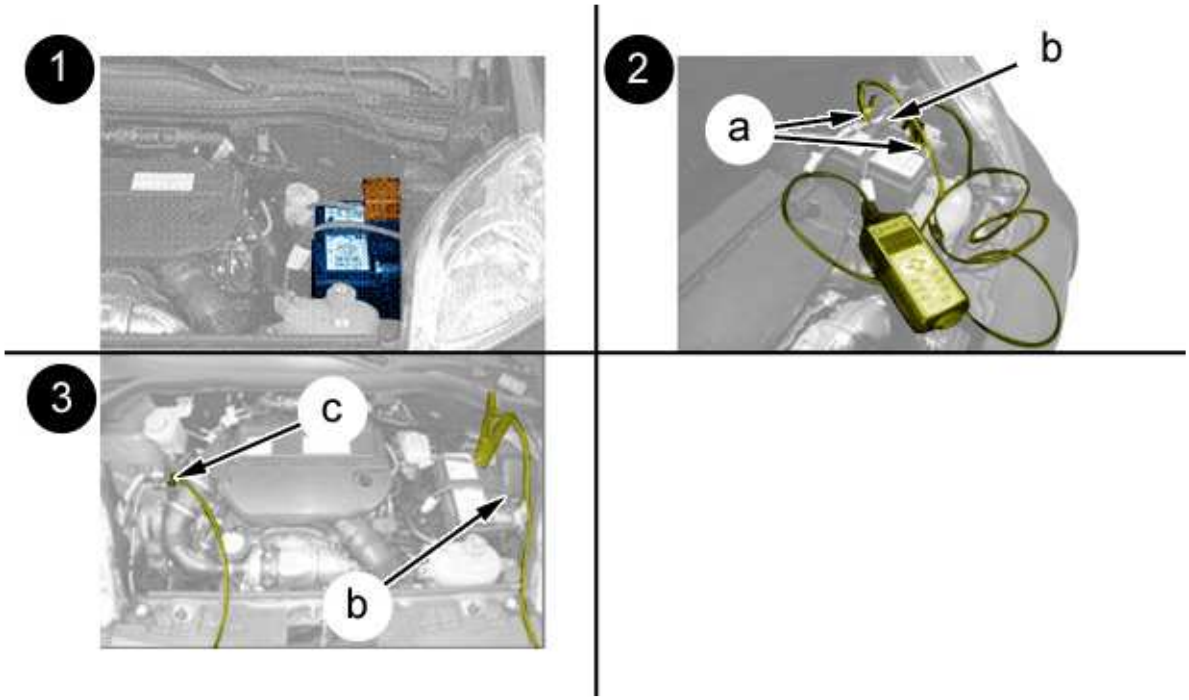

d1ad00vd

Figure ① : Location of the ancillaries battery :

- The ancillaries battery is located under the bonnet
- Access is direct (no battery cover)

Figure ② : Checking the ancillaries battery using either a battery tester or a voltmeter :

- Move the cover aside from the positive terminal of the ancillaries battery
- Disconnect the positive terminal of the service battery (at "b")
- Check the state of charge of the ancillaries battery using either a battery tester or a voltmeter (the black probe on the negative terminal and the red probe on the positive terminal of the ancillaries battery) (at "a")

Figure ③ : Recharging the service battery :

- Disconnect the positive terminal of the service battery (at "b")
- Connect a Marque-approved charger to the ancillaries battery at (The black cable on an earth point at "c" (engine/gearbox) and the red cable on the positive terminal)
- Using the approved charger, commence the recharging of the ancillaries battery, keeping to the manufacturer's instructions
- Disconnect the charger
- Reconnect the positive terminal of the ancillaries battery (at "b")

7 - 21 - CITROËN BERLINGO FIRST

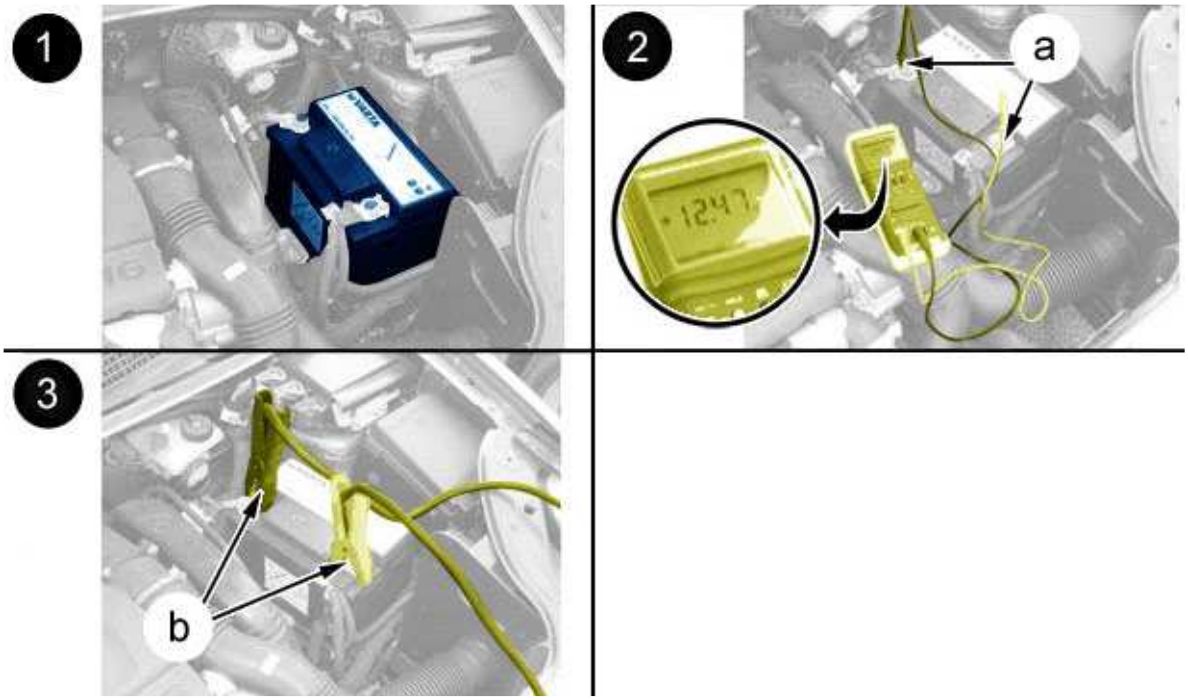

d1ad00gd

Figure ① : Location of the ancillaries battery : The ancillaries battery is located under the bonnet.

Figure ② : Checking the ancillaries battery using either a battery tester or a voltmeter :

- Remove the ancillaries battery style cover
- Check the state of charge of the ancillaries battery using either a battery tester or a voltmeter (the black probe on the negative terminal and the red probe on the positive terminal of the ancillaries battery) (at "a")
- Refit the ancillaries battery cover

Figure ③ : Recharging the service battery :

- Remove the battery cover
- Connect a Marque-approved charger to the ancillaries battery at "b" (The black cable on the negative terminal and the red cable on the positive terminal)
- Using the approved charger, commence the recharging of the ancillaries battery, keeping to the manufacturer's instructions
- Disconnect the charger
- Refit the ancillaries battery cover

7 - 22 - CITROEN BERLINGO (B9) (except electric vehicles)

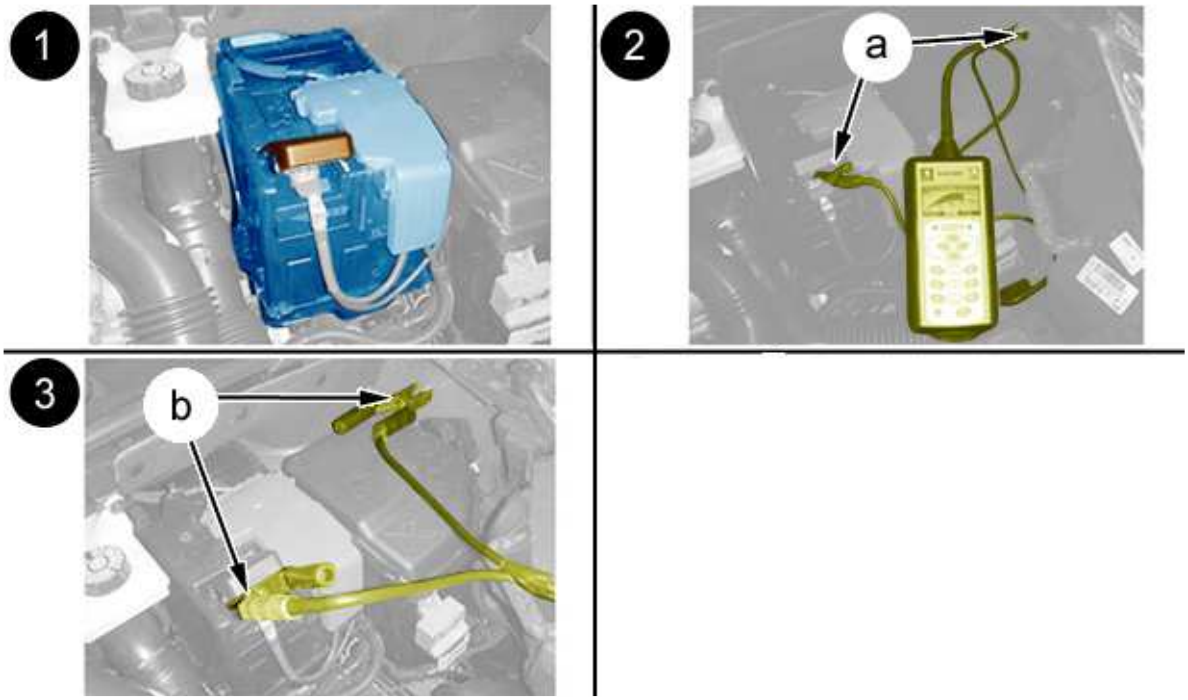

d1ad00hd

Figure ① : Location of the ancillaries battery :

- The ancillaries battery is located under the bonnet
- The ancillaries battery is protected by a clip-on cover which is an access flap to the positive terminal
- A separate earth is located on the front LH wing inner panel

Figure ② : Checking the ancillaries battery using either a battery tester or a voltmeter :

- Open the flap to access the ancillaries battery positive terminal
- Check the ancillaries battery charge status using a battery tester or a voltmeter (the black probe on the remote earth and the red probe on the positive terminal of the ancillaries battery) (at "a")
- Close the flap for access to the positive spade terminal

Figure ③ : Recharging the service battery :

- Open the flap to access the ancillaries battery positive terminal
- Connect a Marque-approved charger to the ancillaries battery at "b" (the black cable on the remote earth and the red cable on the positive terminal)
- Using the approved charger, commence the recharging of the ancillaries battery, keeping to the manufacturer's instructions
- Disconnect the charger
- Close the flap for access to the positive spade terminal

7 - 23 - CITROËN BERLINGO Electric (B9E)

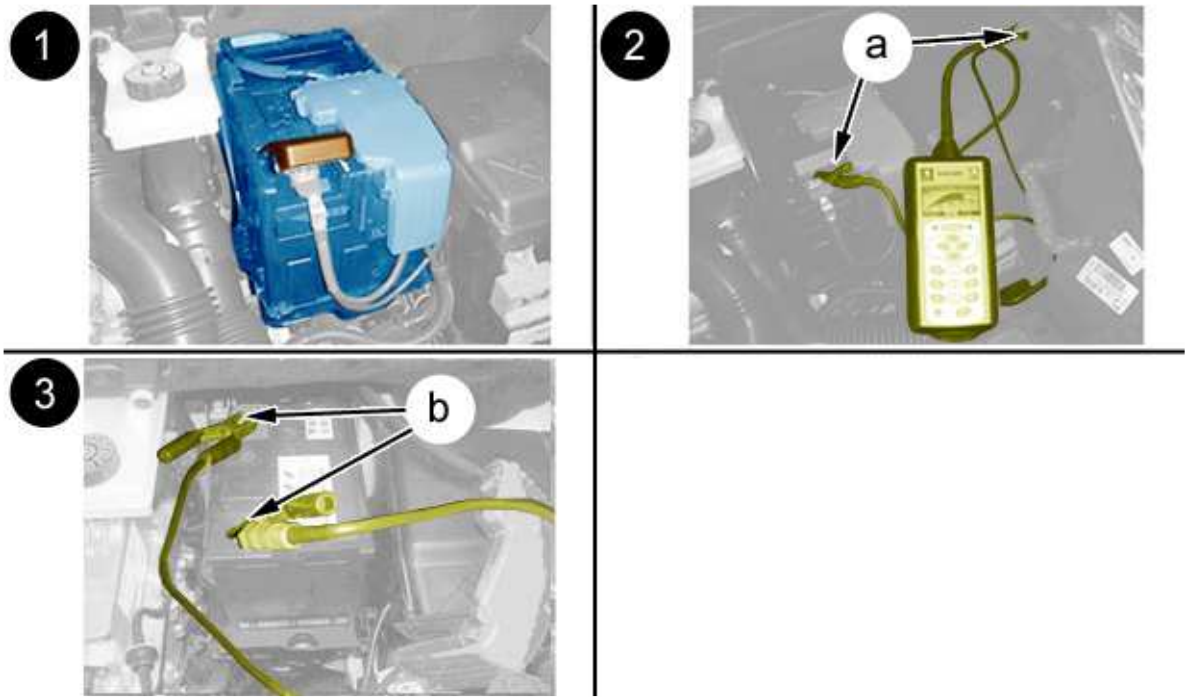

d1ad01yd

Figure ① : Location of the ancillaries battery :

- The ancillaries battery is located under the bonnet
- The ancillaries battery is protected by a clip-on cover which is an access flap to the positive terminal
- A separate earth is located on the front LH wing inner panel

Figure ② : Checking the ancillaries battery using either a battery tester or a voltmeter :

- Open the flap to access the ancillaries battery positive terminal
- Check the ancillaries battery charge status using a battery tester or a voltmeter (the black probe on the remote earth and the red probe on the positive terminal of the ancillaries battery) (at "a")
- Close the flap for access to the positive spade terminal

Figure ③ : Recharging the service battery :

- Remove the ancillaries battery style cover
- Disconnect the negative terminal of the service battery (Isolate the cable using an insulating cover)
- Disconnect the positive terminal of the ancillaries battery (Isolate the cable using an insulating cover)
- Connect a Marque-approved charger to the ancillaries battery at "b" (The black cable on the negative terminal and the red cable on the positive terminal)
- Using the approved charger, commence the recharging of the ancillaries battery, keeping to the manufacturer's instructions
- Disconnect the charger
- Reconnect the positive terminal of the ancillaries battery
- Reconnect the negative terminal of the service battery
- Refit the ancillaries battery cover

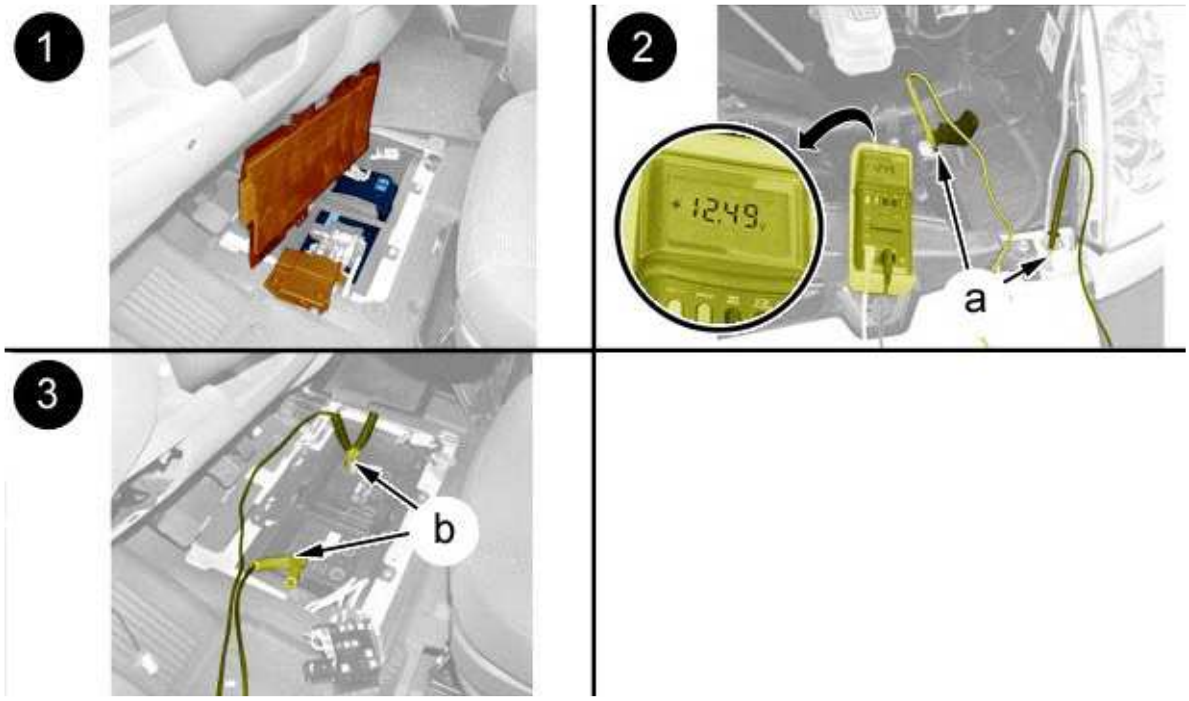

d1ad00jd

Figure ① : Location of the ancillaries battery :

- The ancillaries battery is located in the driver's footwell
- A remote terminal block (positive terminal and earth) is located under the bonnet

Figure ② : Checking the ancillaries battery using a voltmeter :

- Open the flap for access to the remote positive terminal
- Check the ancillaries battery state of charge using a voltmeter (the black tip on the remote earth and the red tip on the remote positive terminal) (at "a")
- Close the flap for access to the remote positive terminal

Figure ③ : Checking the ancillaries battery using a battery tester or charging the ancillaries battery.

Checking the ancillaries battery using a battery tester :

- Remove the ancillaries battery access flap
- Connect a battery tester to the ancillaries battery (the black tip on the negative terminal and the red tip on the positive terminal of the ancillaries battery) (at "b")
- Reclose the ancillaries battery access flap

Recharging the service battery :

- Remove the ancillaries battery access flap
- Disconnect the negative terminal of the service battery
- Disconnect the positive terminal of the ancillaries battery
- Connect a Marque-approved charger to the ancillaries battery at "b" (The black cable on the negative terminal and the red cable on the positive terminal)

- Using the approved charger, commence the recharging of the ancillaries battery, keeping to the manufacturer's instructions
- Disconnect the charger
- Reconnect the positive terminal of the ancillaries battery
- Reconnect the negative terminal of the service battery
- Reclose the ancillaries battery access flap

7 - 25 - CITROEN RELAY 3 (After restyling of the front face)

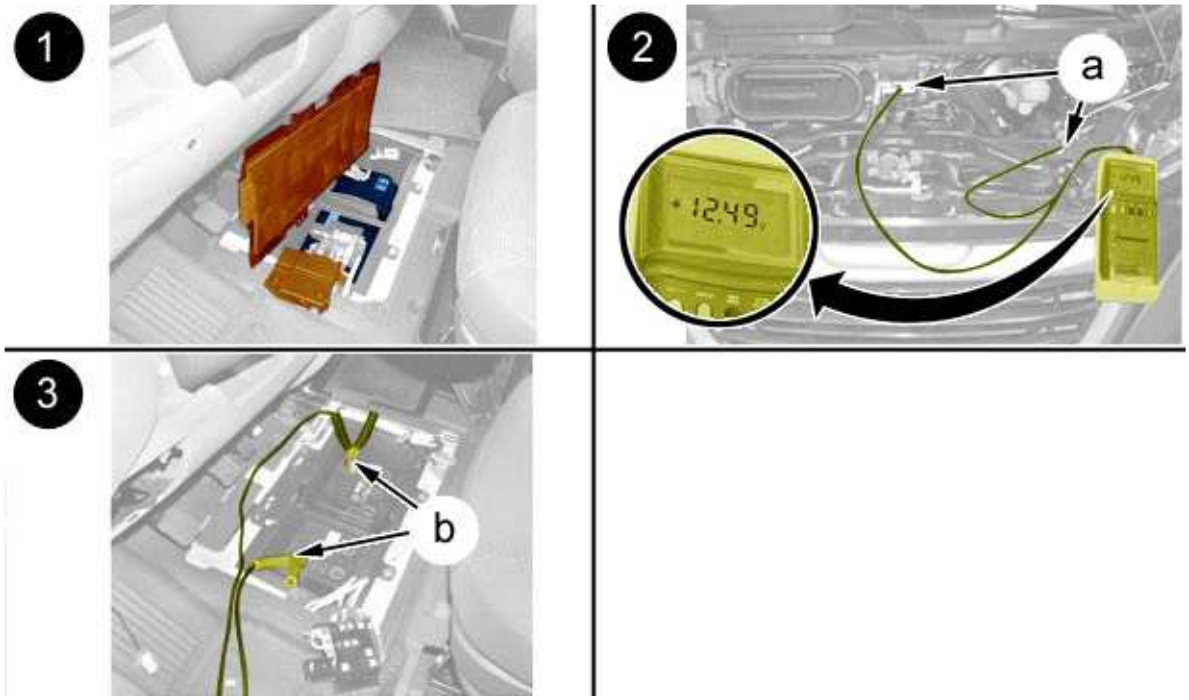

d1ad022d

Figure ① : Location of the ancillaries battery :

- The ancillaries battery is located in the driver's footwell
- The remote positive terminal and earth are located under the bonnet

Figure ② : Checking the ancillaries battery using a voltmeter :

- Open the flap for access to the remote positive terminal
- Check the ancillaries battery state of charge using a voltmeter (the black tip on the remote earth and the red tip on the remote positive terminal) (at "a")
- Close the flap for access to the remote positive terminal

Figure ③ : Checking the ancillaries battery using a battery tester or charging the ancillaries battery.

Checking the ancillaries battery using a battery tester :

- Remove the ancillaries battery access flap
- Connect a battery tester to the ancillaries battery (the black tip on the negative terminal and the red tip on the positive terminal of the ancillaries battery) (at "b")
- Reclose the ancillaries battery access flap

Recharging the service battery :

- Remove the ancillaries battery access flap
- Disconnect the negative terminal of the service battery
- Disconnect the positive terminal of the ancillaries battery
- Connect a Marque-approved charger to the ancillaries battery at "b" (The black cable on the negative terminal and the red cable on the positive terminal)
- Using the approved charger, commence the recharging of the ancillaries battery, keeping to the manufacturer's instructions
- Disconnect the charger
- Reconnect the positive terminal of the ancillaries battery
- Reconnect the negative terminal of the service battery
- Reclose the ancillaries battery access flap

NEW VEHICLE PREPARATION : SAFETY AND CLEANLINESS PRECAUTIONS AND RECOMMENDATIONS

1 - GENERAL INSTRUCTIONS FOR SAFETY AND CLEANLINESS

ESSENTIAL : Operations must be performed by specialist personnel who are aware of the safety instructions and precautions to be taken

WARNING : In the event of LDS fluid coming into contact with the eyes, rinse with copious amounts of water and consult a specialist. In the event of LDS fluid coming into prolonged contact with the skin, wash with soap and water

All operations must be carried out according to the following instructions and regulations :

- Competent health authorities
- Prevention of accidents
- Protection of the environment

1 - 1 - Individual protections

The wearing of personal protective equipment (PPE) is compulsory for New Vehicle Preparation

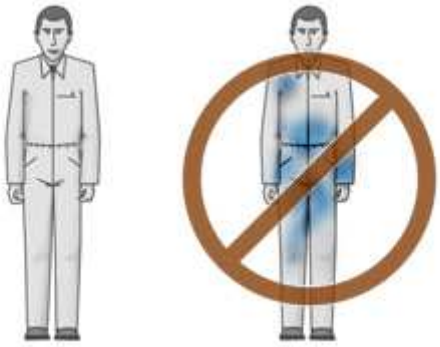

e3bm04ct

The following items of personal protective equipment are compulsory

- Trousers/overalls or suitable combination

- Safety shoes

Depending on the location and the type of operation, additional items of personal protective equipment are compulsory :

- Safety helmet, when operating underneath the vehicle
- Protection goggles, when working on fluid circuits, fuel circuits, air circuits, etc. or for operations that could involve the suspension or projection of particles in the air
- Face masks, for operations that could involve the suspension or projection of particles in the air
- Safety gloves, to guard against cuts or exposure to chemical products
- Ear protections, when working in a noisy environment

1 - 2 - Recommendations

The quality of the New Vehicle Preparation demands observance of the following instructions	
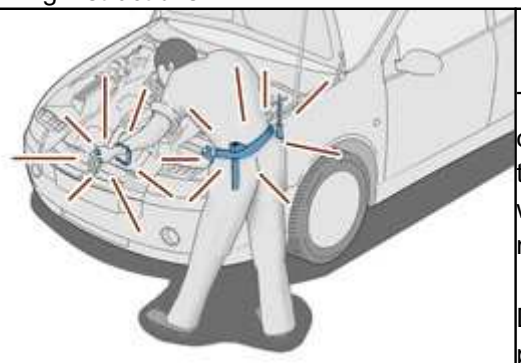 *e3bm04et*	Take off any metallic objects that could scratch the paintwork (Rings, watches, chains, bracelets, metal belts) Do not place tools in your pockets
 *e3bm04ft*	Always work with clean hands and wash them as often as necessary
 *e3bm04gt*	Wear clean shoes when entering the vehicle

1 - 3 - Precautions to be taken

The quality of the New Vehicle Preparation depends on observance of the following precautions	
	Do not use the audio equipment while carrying out the new vehicle

 *e3bm04ht*	preparation except when checking its operation
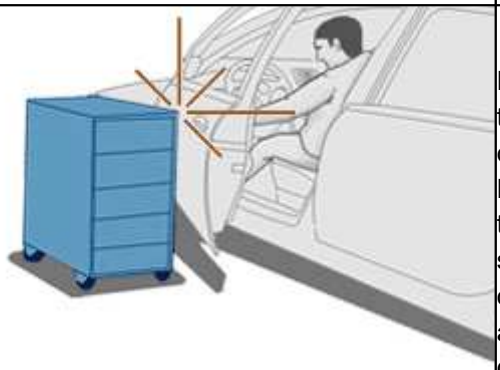 *e3bm04it*	For checking the quality of the work, the work area dedicated to New Vehicle Preparation must be clean, tidy, well-lit and sufficiently spacious to allow the opening of the doors without any risk of them becoming damaged
 *e3bm04jt*	Do not place or rest objects on the vehicle Do not place objects inside the vehicle
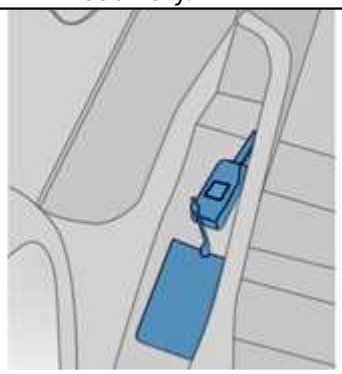 *e3b700lt*	Place the ignition key in the driver's door storage pocket when you stop vehicle preparation that is in progress

1 - 4 - Environment

Respect the environmental regulations (According to legislation in force in the country) :

- Separation and collection of waste
- Ejection of used water
- Air pollution
- Noise emissions

2 - BEFORE TAKING ANY ACTION

ESSENTIAL : Depending on the repair to be carried out, respect the recommendations for lifting and supporting the vehicle (hoist or stands)

WARNING : Perform the operations that are necessary prior to a disconnection of the ancillaries battery

WARNING : Before disconnecting the battery, partially open the door windows (Vehicles with frameless doors)

WARNING : Do not use the windscreen wipers to clear the windscreen of snow : Use the products recommended by the manufacturer

 *e3b700mt*	Deice the windows using a scraper approved by the manufacturer (if necessary)
 *e3b700nt*	Reposition the covers protecting the seats, carpets and driving position (if necessary)

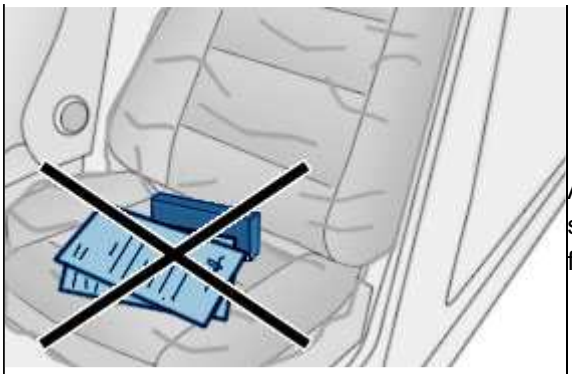 *e3b700ot*	Any documents or objects should be placed in the footwell

3 - AFTER ANY ADJUSTMENT

WARNING : Perform the operations that are required following a reconnection of the ancillaries battery

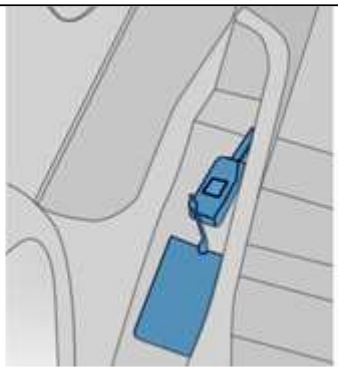 *e3b700lt*	Place the ignition key in the driver's door storage pocket when the vehicle preparation is completed
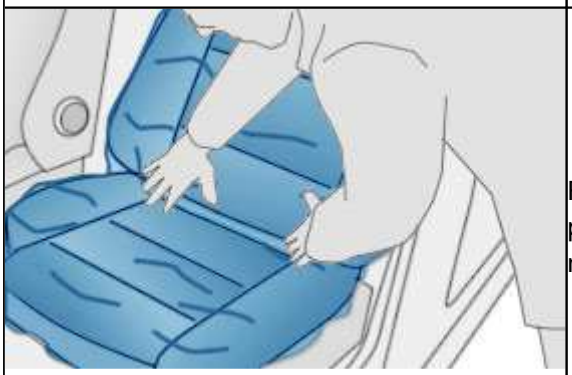 *e3b700nt*	Reposition the driving position protections (if necessary)
	Reposition the carpet protections (if necessary)

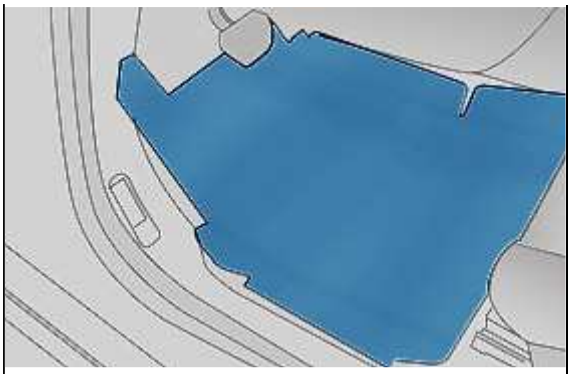

e3b700pt

4 - ELECTRIC OR HYBRID VEHICLES

ESSENTIAL : Only those persons that have received a training specific to electric or hybrid vehicles are qualified to perform the New Vehicle Preparation (please observe the regulations that are in force in the country concerned)

ESSENTIAL : Disconnect the charging cable from the 230 volt mains before carrying out any work on the vehicle (If it is a rechargeable vehicle)

5 - HYDRAULIC SUSPENSION

5 - 1 - Safety instructions

WARNING : After switching off the engine, wait for 30 seconds before starting any repair work

WARNING : The hydraulic circuit must be depressurised with the wheels not hanging

WARNING : If the vehicle is lifted with a vehicle lift that lifts under the body, remove the cap from the LDS fluid reservoir. Refit the cap of the LDS fluid reservoir, once you have lowered the vehicle

5 - 2 - Cleanliness instructions

WARNING : Recovered LDS fluid must not be reused. Any topping up should be with new fluid

6 - PNEUMATIC SUSPENSION

WARNING : Deactivate the pneumatic suspension before lifting the vehicle (2 or 4 post lift, workshop jack or vehicle jack)

NEW VEHICLE PREPARATION : METHOD OF APPLICATION - BATTERY TESTER "MIDTRONICS"

ESSENTIAL : Observe the safety and cleanliness recommendations

1 - PRESENTATION

Roles of the battery tester "MIDTRONICS" :

- To avoid any battery failures arising after handover to the customer
- To remove contraints on accessibility : Software specific to PSA enables a check to be made either on the ancillary battery terminals or on the remote terminals
- Direct reading of the diagnosis on the battery tester (BATTERY OK ; CHARGE THE BATTERY ; REPLACE THE BATTERY)
- Perform a diagnosis based on the reading of the voltage and the state of health of the ancillaries battery
- Justify warranty claims by creating a "test code" transmitted by infrared link to the diagnostic tool (coherence between the result of the test and the action performed by the preparer)

2 - INSPECTION OF THE MIDTRONICS BATTERY TESTER

WARNING : The periodic inspection is the responsibility of the owner of the "MIDTRONICS" battery tester

Have the "MIDTRONICS" battery tester checked and calibrated every / years in an official "MIDTRONICS" approved technical centre.

3 - UPDATING OF THE BATTERY TESTER

Depending on the design of the new vehicles, it may be necessary to update the battery tester.

NOTE : The necessity of updating the battery tester is specified in the note accompanying the launch of the vehicle



d1am04nd

Procedure to be followed (*).

Operation for saving existing data :

- Extract the SD card from the battery tester
- Insert the SD card into a PC
- Save all the files ".csv" that are on the SD card into a directory of the PC (Possible loss of data during the update)
- Remove the SD card from the PC
- Insert the SD card in the battery tester

NOTE : (*) This procedure necessitates the use of a PC that has an SD card reader and a network connection

Identification of the version installed, and the version to be downloaded :

- Switch on the battery tester to gain access to the main menu
- Select "Utility" from the main menu
- Select : "Format" (In the "Utility" menu)
- Select "YES", When the message "On Hold" appears
- Select : "Update", In the "Utility" menu
- Select "Record configuration", then OK or NEXT (according to model)
- Select "Info", In the Main Menu
- Select "Version" (In the "Info" menu)
- The screen displays the version installed in the "MIDTRONICS" battery tester
- Determine the version to be downloaded from the table below

Version installed	Version to be downloaded
192-628A	EXP-925_A

192-628B	EXP-925_B
192-628C	EXP-925_C
192-628D	EXP-925_D
192-628H	EXP-925_H
192-628I	EXP-925_I
192-628J	EXP-925_J (v1.07)
192-628K	No update necessary
192-630I	EXP-925_I
192-631A	EXP-925 EST_A
192-631B	EXP-925 EST_B
192-631C	EXP-925 EST_C
192-631D	EXP-925 EST_D
192-631G	EXP-925 EST_G
192-631H	EXP-925 EST_H
192-631I	EXP-925 EST_I (v1.07)
192-631J	No update necessary
192-110392A	EXP-925_A _Compound (v1.07)

Saving the update files onto the SD card :

- Extract the SD card from the battery tester
- Insert the SD card into a PC (Do not format the SD card)
- On the manufacturer's after sales portal, under "Technical Documentation / Diagnostics", select "General"
- "Static Diagnostics" opens in a new window
- Select the language of use
- Under "MIDTRONICS / MIDTRONICS battery tester update", download the update ".zip" file available
- Extract from the ".zip" file the 2 ".hex" files corresponding to the version that is to be downloaded
- Copy the 2 ".hex" files onto the SD card (Do not copy the directory)
- Remove the SD card from the PC
- Insert the SD card in the battery tester

Updating the microsoftware of the tester :

- Connect the battery tester to a 12 V battery to prevent any loss of power during the update process
- Select "Utility" from the main menu
- Select "Update" (In the "Utility" menu)
- Select "Microsoftware" then "OK" or "NEXT" (according to model)
- Select "YES", When the message "On Hold" appears
- The tester updates the FLASH memory then the EEPROM
- After the message appears indicating that the update is completed, switch the battery tester off and then back on again

Confirmation of the update of the tester microsoftware :

- Select "Utility" from the main menu
- Select : "Update" (In the "Utility" menu)
- Select "Load Config" then "OK" or "NEXT" (according to model)
- After the message has displayed indicating that the configuration is loaded, depower and then repower the MIDTRONICS battery tester

NOTE : The new current version displays on the start-up screen after a few seconds (The version displayed should be version V1.07)

This information is also permanently available in "Version" :

- Select : "INFO" (In the Main Menu)
- Select : "Version" (In the "Info" menu)

Configuration of the tester :

- Select "Utility" from the main menu
- Select : "Configuration of the tester" (In the "Utility" menu)
- Enter and confirm the following parameters : The time display format, the time, the date display format, the date, the type of user and the region of use

  NOTE : For Latin America, select the region of use "LATAM"

4 - METHOD OF OPERATION

SPECIAL FEATURE :

FOR : 1CA3 -

FOR : 1CA9 -

FOR : 1CB0 -

FOR : 1CB3 -

FOR : 1CB5 -

FOR : 1CB7 -

FOR : 1CB8 -

FOR : 1CB9 -

FOR : 1CE3 -

FOR : 1CH5 -

FOR : 1CLA -

FOR : 1CMC -

FOR : 1CMJ -

FOR : 1CMP -

FOR : 1CMS -

FOR : 1CM3 -

FOR : 1CM5 -

FOR : 1CM7 -

FOR : 1CNA -

FOR : 1CN8 -

FOR : 1CR7 -

FOR : 1CT2 -

FOR : 1CVV -

FOR : 1CWA -

FOR : 1CXA -

FOR : 1CXW -

FOR : 1CX6 -

FOR : 1CX7 -

FOR : 1CYA -

FOR : 1C58 -

FOR : 1C6N -

FOR : 2CA9 -

FOR : 2CB9 -

FOR : 2CG9 -

FOR : 2CM5 -

FOR : 2CU9 -

For the measurement to be reliable, perform the battery test at the start of the PDI, respecting the following mode of operation :

- **Check that the BSI shunt is in the "Park" position** (CITROEN)
- Switch on the ignition (*)
- Switch on the dipped headlamps
- Start the engine (**)
- Move the vehicle forwards into the inspection zone
- Release the bonnet using the bonnet release inside the vehicle
- Stop the engine (***) : (Automatic extinction of the vehicle lamps (according to model)
- Switch on the ignition (*)
- Turn on the dipped beams, or place the air blower control in the intermediate position (For the

following vehicles : CITROËN NEMO, CITROEN RELAY)
- Wait 5 seconds
- Turn off the dipped beams, or stop the air blower (according to model)
- Switch off the ignition (****)
- Switch off all the electrical consumers
- Get out of the vehicle
- Close the accesses (If accessing the ancillaries battery necessitates leaving one of the doors open, manually close the catch of the lock of the door involved, to decoy the electrical system)
- Wait 4 minutes
- Perform the battery test

(*) The switching on of the ignition differs depending on the type of vehicle :

- Standard vehicle : Place the key in the "Ignition" position
- Vehicle with hands-free starting : Press button "START" (Without pressing on the brake pedal (automatic gearbox) or on the clutch pedal (manual gearbox))
- Electrical vehicle : Turn the key to position "ON"

(**) Starting the vehicle differs depending on the type of vehicle :

- Standard vehicle : Turn the key to position "Start"
- Vehicle with hands-free starting : Press on the brake pedal (automatic gearbox) or on the clutch pedal (manual gearbox), and press on the "START" button
- Electrical vehicle : Turn the key to position "START" and hold this position until the warning lamp "READY" comes on in the instrument panel

(***) Stopping the vehicle differs depending on the type of vehicle :

- Standard vehicle : Turn the key to position "0"
- Vehicle with hands-free starting : Press button "START"
- Electrical vehicle : Turn the key to position "OFF"

(****) The switching off of the ignition differs depending on the type of vehicle :

- Standard vehicle : Turn the key to position "0"
- Vehicle with hands-free starting : Press button "START" (Without pressing on the brake pedal (automatic gearbox) or on the clutch pedal (manual gearbox))
- Electrical vehicle : Turn the key to position "OFF"

WARNING : When handing over to the customer is not done following the "New vehicle Preparation (PDI)", perform any checks on the ancillaries battery with the BSI shunt in the "customer" position

NOTE : Note down the result of the checking of the ancillaries battery on the FFA ('loose items check sheet') so as to guarantee traceability

5 - PRECAUTIONS TO BE TAKEN DURING USE

ESSENTIAL : Observe the safety and cleanliness recommendations

5 - 1 - Vehicles without a quickfit clip secured on the positive terminal

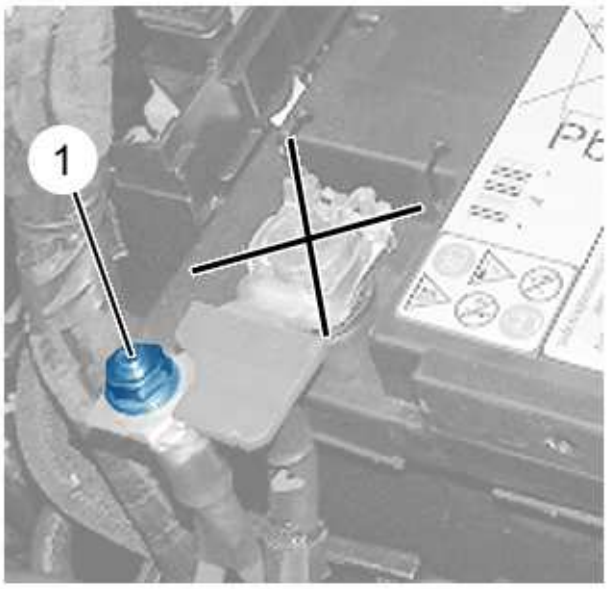

d1am04hd

WARNING : Connect the red clip of the "MIDTRONICS" battery tester on the metal component (1) close to the ancillaries battery terminals, as close as possible to the crimping of the power wire

5 - 2 - Vehicles equipped with a quickfit clip secured on the positive terminal (With studs)

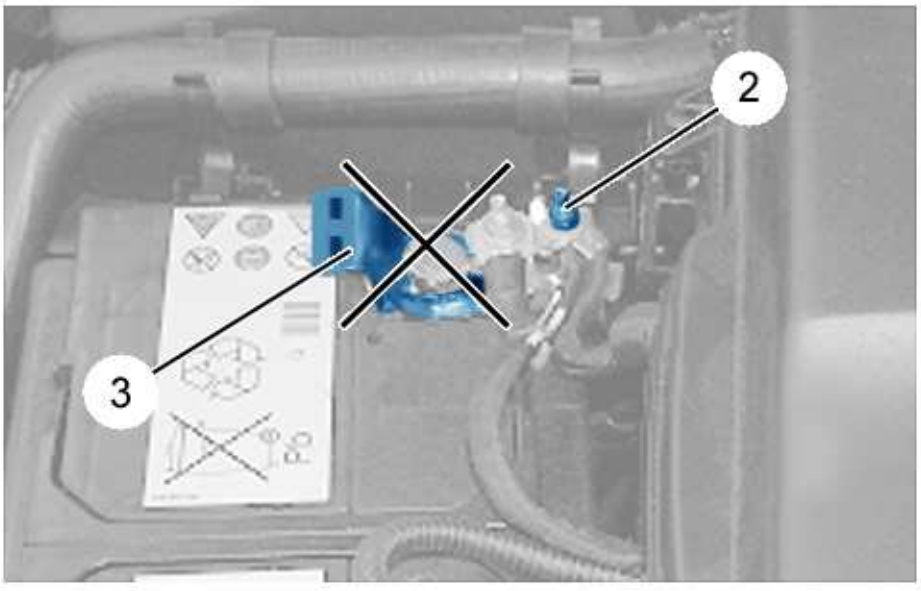

d1am04id

WARNING : Never connect the red clip from the battery tester on the locking cap (3). Connect the red clip of the battery tester on the stud (2)

NOTE : The contact surface between the extremity of the locking cap (3) and the terminal of the ancillaries battery is too weak to be able to transmit the parameters to the "MIDTRONICS" battery tester. In this case, the measurement from the "MIDTRONICS" battery tester could lead you to recharge the ancillaries battery unjustifiably

5 - 3 - Vehicles equipped with a quickfit clip secured on the positive terminal (Without studs)

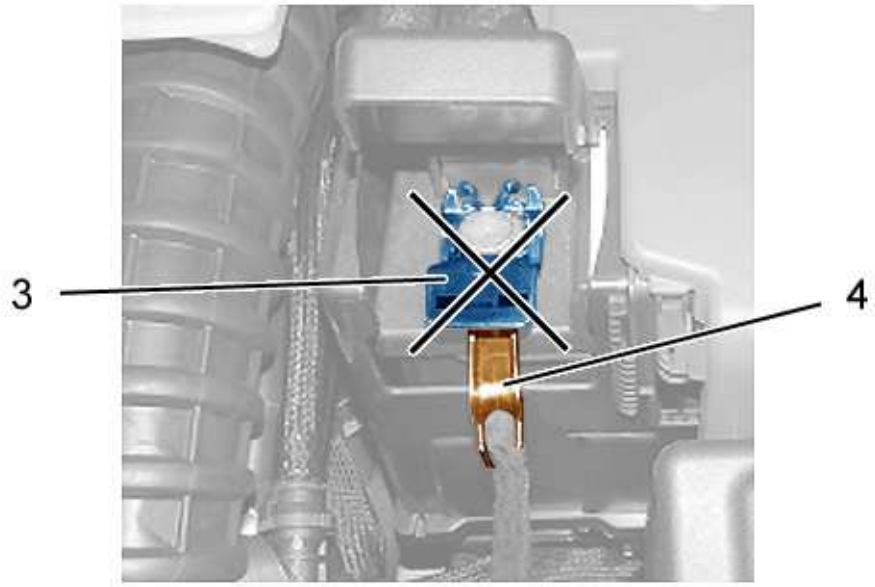

d1am04ud

WARNING : Never connect the red clip from the battery tester on the locking cap (3). Connect the red clip of the "MIDTRONICS" battery tester on the metal component (4) close to the ancillaries battery terminals, as close as possible to the crimping of the power wire

NOTE : The weakness of the contact surface close to the locking cap (3) could lead you to recharge the ancillaries battery unjustifiably

5 - 4 - Vehicles without a battery charge status control unit on the negative terminal

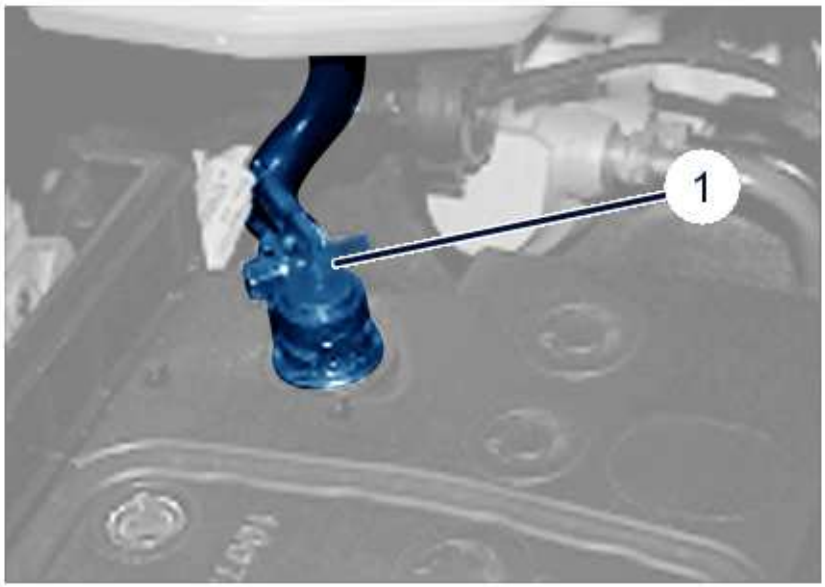

d1am04kd

WARNING : Connect the black clip of the battery tester on a metal component (1) close to the ancillaries battery terminals, as close as possible to the crimping of the power wire

5 - 5 - Vehicles having a battery charge status control unit on the negative terminal

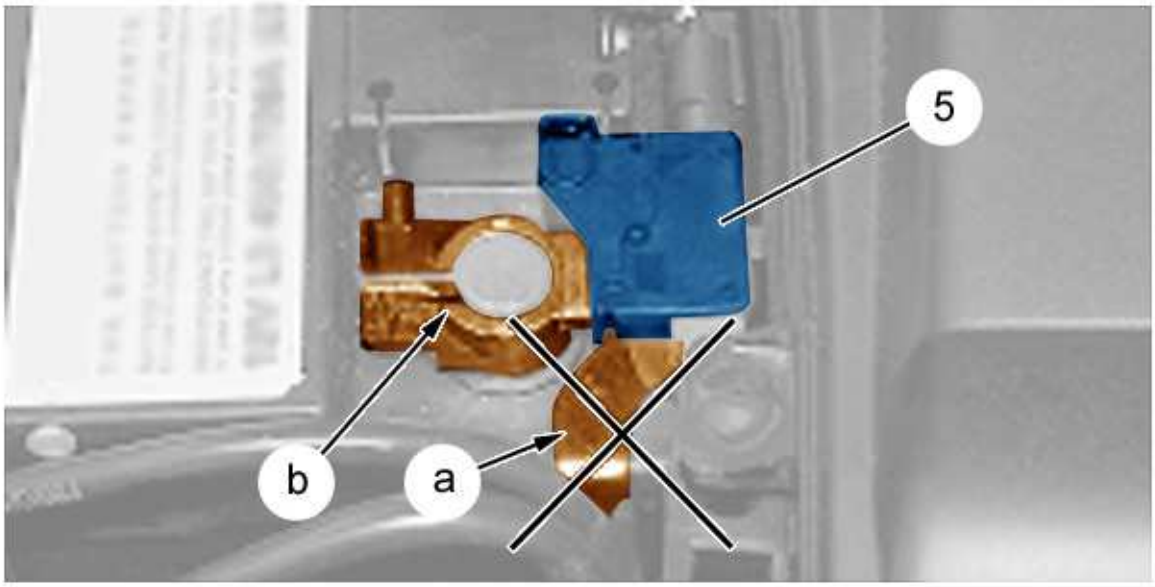

d1am04vd

WARNING : Never connect the black clip of the "MIDTRONICS" battery tester to the earth cable carrier crimped to the outlet of the battery charge status control unit (5) (at "a") (The "MIDTRONICS" tester if connected on the lug "a" activates the battery charge status control unit and the current consumed by the latter results in a tester diagnosis error) . Connect the black clip of the battery tester at the terminal "b" entering the battery charge status control unit (5)

NOTE : The electrical resistance of the battery charge status control unit (5) influences the measuring action of the battery tester. In this case the measurement by the battery tester could cause you to perform a battery recharge needlessly

6 - METHOD OF APPLICATION

WARNING : The accumulators of the "MIDTRONICS" battery tester should be charged up to avoid any risk of cut-off and the test being lost

NOTE : The illustrations below are presented with selection of the language given in French

6 - 1 - Connection of the "MIDTRONICS" battery tester



d1am04cd

WARNING : The temperature during use has to be between 0 and 50°C. The storage temperature has to be between 20 and 70°C

Connect the "MIDTRONICS" battery tester to the ancillaries battery.

The battery tester is supplied with voltage.

Press on button "c" to supply the battery tester with voltage (if necessary).

The version displayed should be version V1.07.

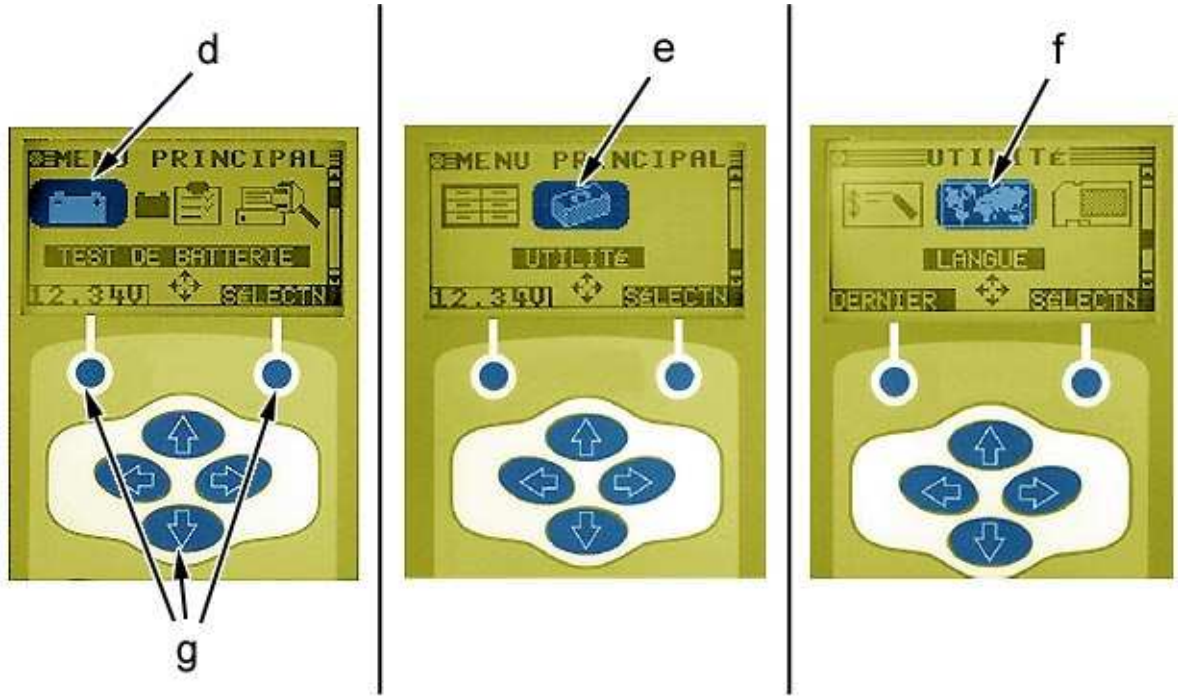

d1am04dd

Select the desired menu via the direction arrows and the selection buttons "g" :

- Battery test : Menu "d"
- Selection of language : Menu "e" then menu "f"

6 - 2 - Location of the ancillaries battery

Select the menu : "Location of battery" :

- Under the bonnet
- Under the seat
- In the boot
- Footwell
- Outside the vehicle

6 - 3 - Location of measurement points

Select the menu : "Location test".

Location of measurement points	Definitions	Technical justification
	The black clip is connected to a body earth. The red clip	The ancillaries

Ancillaries battery recharging terminals	is connected on the ancillaries battery positive terminal (In compliance with the procedure indicated in the user precautions)	battery negative terminal is inaccessible
	The red clip is connected to a separate terminal under the bonnet. The black clip is connected to a body earth	The ancillaries battery is difficult to access as a result of being located in the boot or under the seat
Ancillaries battery terminals	The 2 clips are connected directly on the ancillaries battery terminals	

SPECIAL FEATURE :

FOR : 1CA3 -

FOR : 1CA9 -

FOR : 1CB0 -

FOR : 1CB1 -

FOR : 1CB3 -

FOR : 1CB5 -

FOR : 1CB7 -

FOR : 1CB8 -

FOR : 1CB9 -

FOR : 1CE3 -

FOR : 1CH5 -

FOR : 1CLA -

FOR : 1CMC -

FOR : 1CMJ -

FOR : 1CMP -

FOR : 1CMS -

FOR : 1CM3 -

FOR : 1CM5 -

FOR : 1CM7 -

FOR : 1CNA -

FOR : 1CN8 -

FOR : 1CR7 -

FOR : 1CT2 -

FOR : 1CVV -

FOR : 1CWA -

FOR : 1CXA -

FOR : 1CXW -

FOR : 1CX6 -

FOR : 1CX7 -

FOR : 1CYA -

FOR : 1C58 -

FOR : 1C6N -

FOR : 2CA9 -

FOR : 2CB9 -

FOR : 2CG9 -

FOR : 2CM5 -

FOR : 2CU9 -

In the case of measurements being taken on remote terminals (recharging terminals), select the vehicle platform	
Vehicle	Platform
C3 (A51), DS3, C4 Cactus	1
C4, DS4, DS5, BERLINGO, C4 Picasso (B78)	2
Not applicable	3

In the case of measurements on the remote terminals of a platform 2	
C4, DS4, DS5, BERLINGO	Old platform
C4 Picasso (B78)	New platform (EMP2)

6 - 4 - Identification of the ancillaries battery type

Select the menu : "Battery type".

SPECIAL FEATURE :

FOR : 1CA3 -

FOR : 1CA9 -

FOR : 1CB0 -

FOR : 1CB1 -

FOR : 1CB3 -

FOR : 1CB5 -

FOR : 1CB7 -

FOR : 1CB8 -

FOR : 1CB9 -

FOR : 1CH5 -

FOR : 1CLA -

FOR : 1CMC -

FOR : 1CMJ -

FOR : 1CMP -

FOR : 1CMS -

FOR : 1CM3 -

FOR : 1CM5 -

FOR : 1CM7 -

FOR : 1CNA -

FOR : 1CN8 -

FOR : 1CR7 -

FOR : 1CT2 -

FOR : 1CVV -

FOR : 1CWA -

FOR : 1CXA -

FOR : 1CXW -

FOR : 1CX6 -

FOR : 1CX7 -

FOR : 1CYA -

FOR : 1C58 -

FOR : 1C6N -

FOR : 2CA9 -

FOR : 2CB9 -

FOR : 2CG9 -

FOR : 2CM5 -

FOR : 2CU9 -

Type of battery written in the menu of the tester	Reference on the ancillaries battery	Application PSA
NORMAL	EF ou EN	- All PSA vehicles (except the vehicles below) - NEMO (HDI engines 75)
AGM	VRLA	- E-HDi engines - CITROEN C5 (HDi 200 engine)
Spiralled	-	Not used on PSA vehicles
GEL	-	Not used on PSA vehicles

6 - 5 - Identification of the ancillaries battery norm

Select the menu : "Norm".

SPECIAL FEATURE :

FOR : 1CA3 -

FOR : 1CA9 -

FOR : 1CB0 -

FOR : 1CB1 -

FOR : 1CB3 -

FOR : 1CB5 -

FOR : 1CB7 -

FOR : 1CB8 -

FOR : 1CB9 -

FOR : 1CE3 -

FOR : 1CH5 -

FOR : 1CLA -

FOR : 1CMC -

FOR : 1CMJ -

FOR : 1CMP -

FOR : 1CMS -

FOR : 1CM3 -

FOR : 1CM5 -

FOR : 1CM7 -

FOR : 1CNA -

FOR : 1CN8 -

FOR : 1CR7 -

FOR : 1CT2 -

FOR : 1CVV -

FOR : 1CWA -

FOR : 1CXA -

FOR : 1CXW -

FOR : 1CX6 -

FOR : 1CX7 -

FOR : 1CYA -

FOR : 1C58 -

FOR : 1C6N -

FOR : 2CA9 -

FOR : 2CB9 -

FOR : 2CG9 -

FOR : 2CM5 -

FOR : 2CU9 -

Ancillaries battery norm written in the menu of the "MIDTRONICS" battery tester	CITROËN make
EN	- All PSA vehicles (except the vehicles below) - NEMO (HDI engines 75)
JIS	C-CROSSER ; C-Zero ; C4 Aircross
EN2	RELAY ; NEMO (Except HDi 75 engine)
DIN	Not used on PSA vehicles
IEC	Not used on PSA vehicles
SAE	Not used on PSA vehicles
CCA	Not used on PSA vehicles

6 - 6 - Identification of the ancillaries battery power

WARNING : Take account of the EN norm amperage, not the PSA amperage

Indication of the amperage of the battery or battery reference according to the norm		
 *d1am04wt*	Norm EN	Amperage written on the battery label E.g. : 450 = PSA current 720 A = Norm EN current

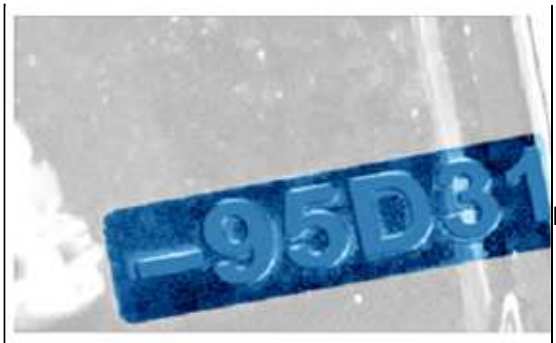 *d1am04yt*	Norm JIS	Reference marked on the battery E.g. : 95D31

SPECIAL FEATURE :

FOR : 1CA3 -

FOR : 1CA9 -

FOR : 1CB0 -

FOR : 1CB1 -

FOR : 1CB3 -

FOR : 1CB5 -

FOR : 1CB7 -

FOR : 1CB8 -

FOR : 1CB9 -

FOR : 1CE3 -

FOR : 1CH5 -

FOR : 1CLA -

FOR : 1CMC -

FOR : 1CMJ -

FOR : 1CMP -

FOR : 1CMS -

FOR : 1CM3 -

FOR : 1CM5 -

FOR : 1CM7 -

FOR : 1CNA -

FOR : 1CN8 -

FOR : 1CR7 -

FOR : 1CT2 -

FOR : 1CVV -

FOR : 1CWA -

FOR : 1CWG -

FOR : 1CXA -

FOR : 1CXW -

FOR : 1CX6 -

FOR : 1CX7 -

FOR : 1CYA -

FOR : 1C58 -

FOR : 1C6N -

FOR : 2CA9 -

FOR : 2CB9 -

FOR : 2CG9 -

FOR : 2CM5 -

FOR : 2CU9 -

Indication of the amperage of the battery or battery reference according to the norm		
 *d1am04xt*	Norm EN	Amperage written on the battery label : NEMO (HDI engines 75)

Vehicles manufactured from RPO 11801 have information on the type of battery and the current of the battery on the Service and Parts label stuck inside the driver's door aperture, with the exception of the following vehicles :

- C-ZERO
- C-CROSSER
- C4 Aircross
- NEMO
- RELAY

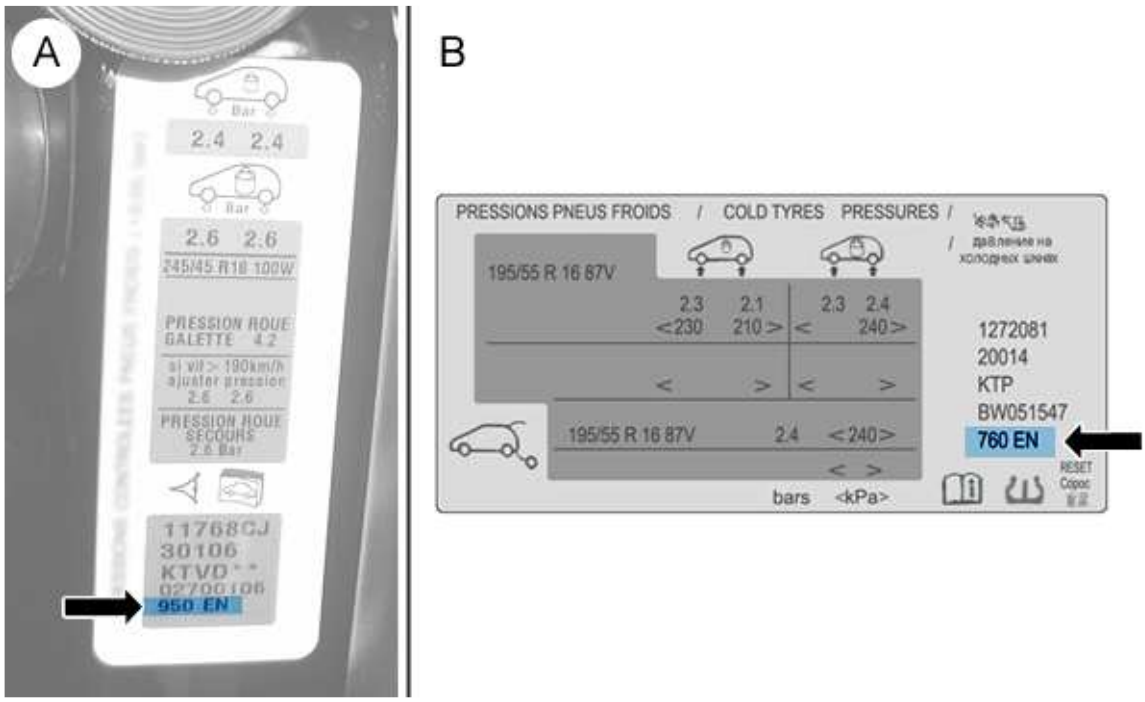

e3bm08od

Types of Service and Parts labels (according to model) :

- "A" : First possibility
- "B" : Second possibility

Enter either the ampères or the part no. of the ancillaries battery, depending on the battery norm.

6 - 7 - Ancillaries battery test

Confirm the starting of the test with a press on the "OK" button.

When the measurement of temperature is requested, position the battery tester 5 cm away from the ancillaries battery and do the temperature measurement.

7 - BATTERY TEST RESULTS

> **NOTE :** The illustrations below are presented with selection of the language given in French

7 - 1 - Actions recommended depending on the result displayed on the "MIDTRONICS" battery tester

Results	Action to be carried out
BATTERY OK	-
CHARGE THE BATTERY	Recharge the battery
REPLACE THE BATTERY.	Test the new ancillaries battery away from the vehicle Replace the battery
SHORT-CIRCUIT	Test the new ancillaries battery away from the vehicle Replace the battery

7 - 2 - Result screens

The result of the testing of the ancillaries battery is displayed on the screen in 4 windows that can be accessed via the direction arrows available on the keypad of the "MIDTRONICS" battery tester.

Result screens	Interpretation
 *d1am04zt*	Results of the test and display of the values measured
 *d1am050t*	General state of the battery and capacity to produce the performance specified in relation to a new battery
	Graphic representing the general state of the battery

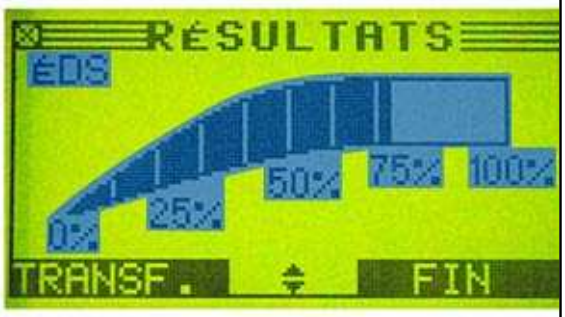 *d1am051t*	
 *d1am052t*	Test code enabling traceability and monitoring by warranty

8 - TRANSFER OF THE RESULTS INTO THE DIAGNOSTIC TOOL

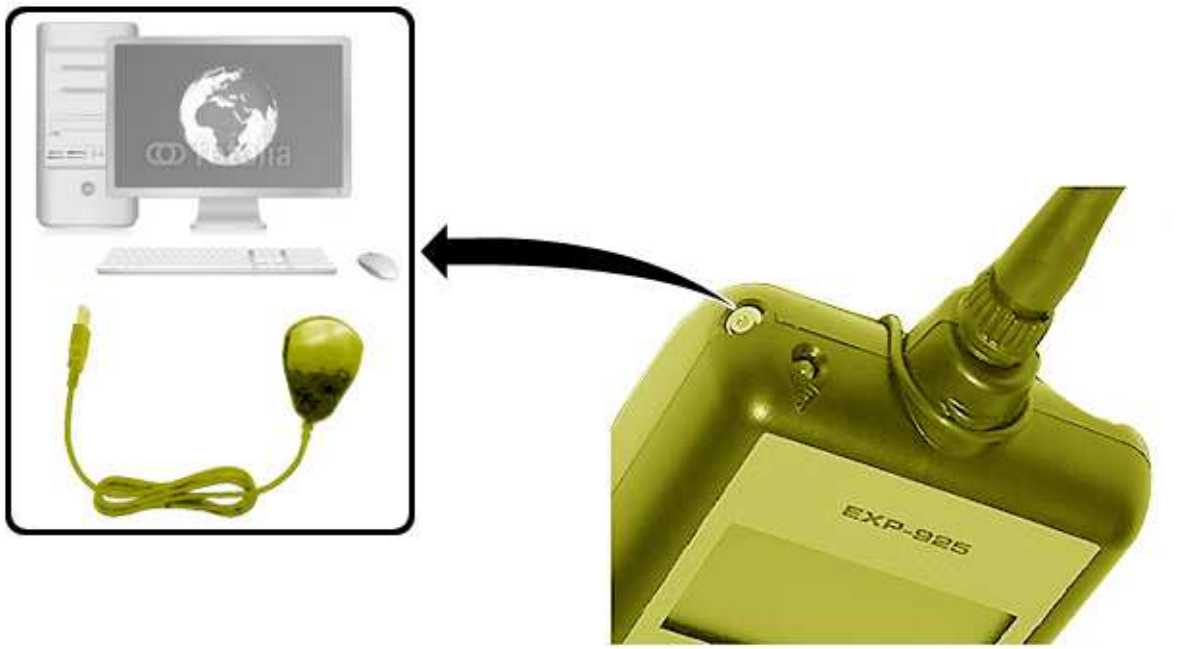

d1am053d

NOTE : The automatic retrieval of the "MIDTRONICS" battery tester result function is only available on the "new vehicle preparation" menu and on the "battery" menu

When the "MIDTRONICS" battery tester displays the result of the check :

- Connect the USB/infrared link to the diagnostic tool DIAGBOX ("MIDTRONICS" battery tester kit)
- Direct the "MIDTRONICS" battery tester to the USB/infrared link
- Press 2 times on the button "TRANSF" (Battery tester)
- Follow the instructions given in the diagnostic tool

9 - RETRIEVAL OF THE RESULTS IN THE DIAGNOSTIC TOOL

> **NOTE :** If replacing the diagnostic tool DIAGBOX, keep a back-up of the "New Vehicle Preparation (PDI)" dossier

The records of ancillaries battery checks, transferred into the diagnostic tool DIAGBOX, can be retrieved in the "New Vehicle Preparation" report which is memorised automatically via the diagnostic tool into the dossier c:\OUD\traces.

NEW VEHICLE PREPARATION : POSITION OF THE SHUNT FOR VEHICLE CONFIGURATION TO CUSTOMER MODE

ESSENTIAL : Observe the safety and cleanliness recommendations

The park mode is a function which saves ancillaries battery consumption while the vehicle is stored in a park, by deactivating some of the vehicle's equipment..

WARNING : The vehicle has to be handed over to the customer in "customer mode" (Configuration for normal usage)

WARNING : When the shunt is in the park position : It is necessary to press the clutch pedal in order to start the engine (depending on the BSI version)

NOTE : Depending on the vehicle, the removable shunts and fuses are to be found either in the glovebox, in the ashtray, or in the front LH door storage pocket, or in reserve in the fusebox

1 - CITROËN C-ZERO

NOTE : The shunt system of this vehicle does not require the repositioning of a fuse but instead uses a reversible push fuse. The reversible push fuse is linked mechanically to the box with 2 stable positions

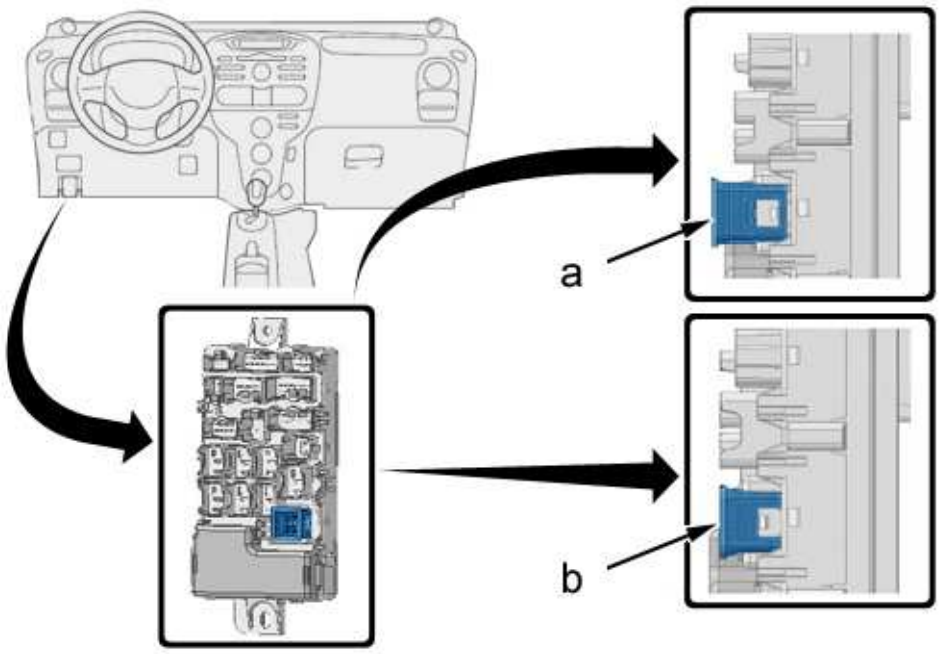

c5fm0v9d

"a" Park shunt in park configuration.

"b" Park shunt in customer configuration.

Operation to be carried out :

- Switch off the ignition
- Remove the flap to access the fuses
- Manually push in the shunt fuse to place the vehicle in customer configuration (at "b")
- Refit the fuse access flap
- Check that the fuse access flap is flush

> **WARNING :** In park configuration, it is not possible to recharge the traction battery and the service battery is not charged by the vehicle's onboard converter

2 - CITROËN C1 (B0)

Vehicle which does not have a "parc / customer" shunt.

3 - CITROËN C1 (B4)

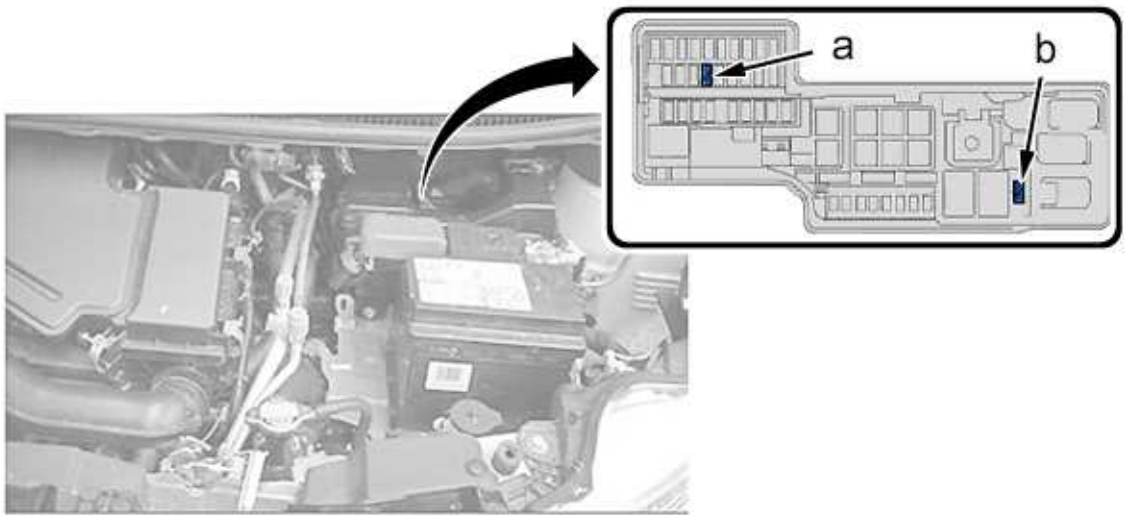

e3b707rd

> **ESSENTIAL :** An incorrect positioning of the shunt in customer configuration may risk a disconnection of the shunt during driving

Method of operation :

- Switch off the ignition
- Open the bonnet
- Remove the cover of the engine compartment fusebox

- Take the fuse located in the fuse reserve (at "b")
- Place the fuse in customer position "a"
- Refit the fuse box cover
- Close the bonnet

4 - CITROËN XSARA PICASSO - CITROËN BERLINGO FIRST - CITROËN BERLINGO MERCOSUR - CITROËN C2 CHINA

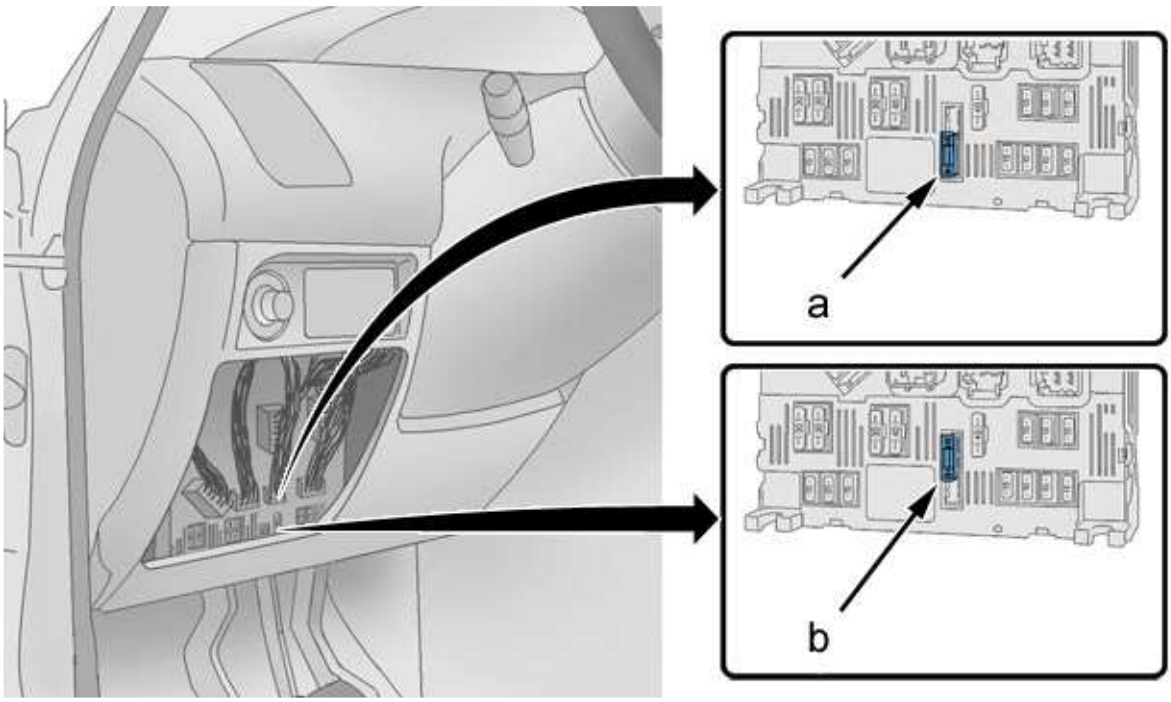

c5fm007d

"a" : Transit configuration.

"b" : Customer configuration.

> **ESSENTIAL :** An incorrect positioning of the shunt in customer configuration may risk a disconnection of the shunt during driving

Method of operation :

- Switch off the ignition
- Remove the flap to access the fuses
- Lift the fuse "a" from the park position
- Place the fuse in the fuse reserve
- Take the shunt located in the ashtray
- Place the shunt in the customer position "b"
- Press the shunt / further in, to force it fully into its housing
- Refit the fuse access flap
- Check that the fuse access flap is flush

5 - CITROËN C3 PICASSO - CITROËN C3 AIRCROSS - CITROËN C3 (A51) - CITROËN C3 (AI51)

MERCOSUR - CITROËN DS3 - CITROËN DS3 CABRIO

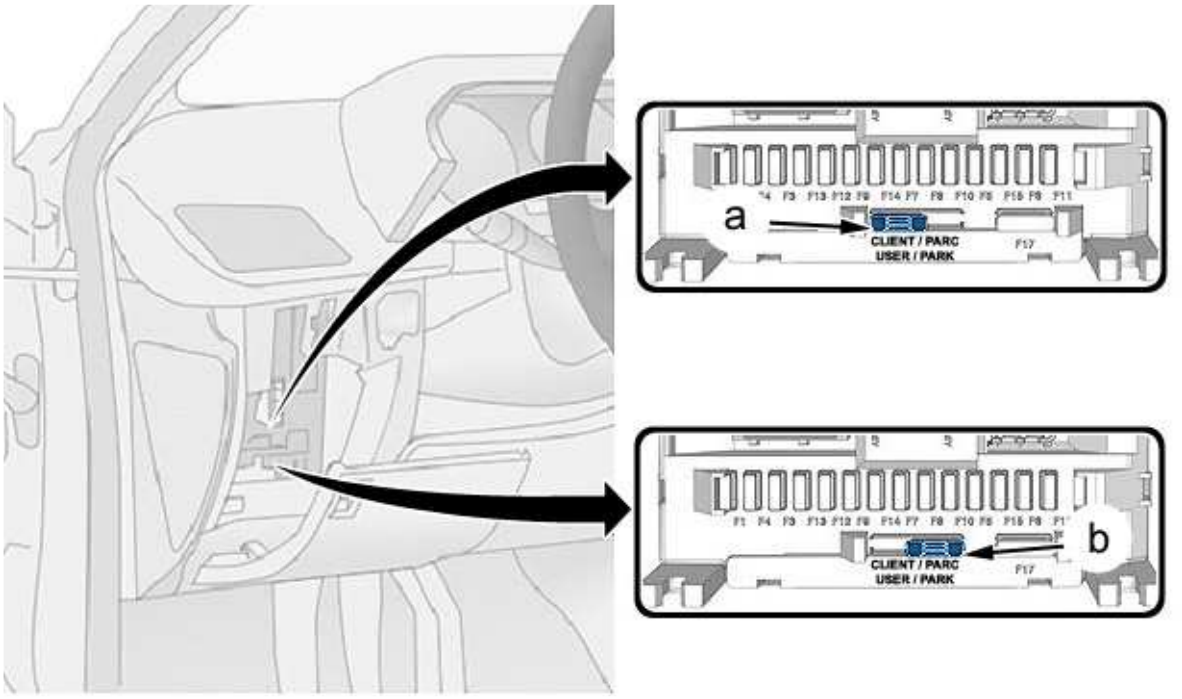

c5fm0ved

"a" : Customer configuration.

"b" : Transit configuration.

> **ESSENTIAL :** An incorrect positioning of the shunt in customer configuration may risk a disconnection of the shunt during driving

Method of operation :

- Switch off the ignition
- Wait 2 minutes for the BSI to switch to standby
- Remove the flap to access the fuses
- Remove the shunt from the park position "b"
- Place the shunt in the customer position "a"
- Press the shunt further in, to force it fully into its housing
- Refit the fuse access flap
- Check that the fuse access flap is flush

6 - CITROËN C-ÉLYSÉE

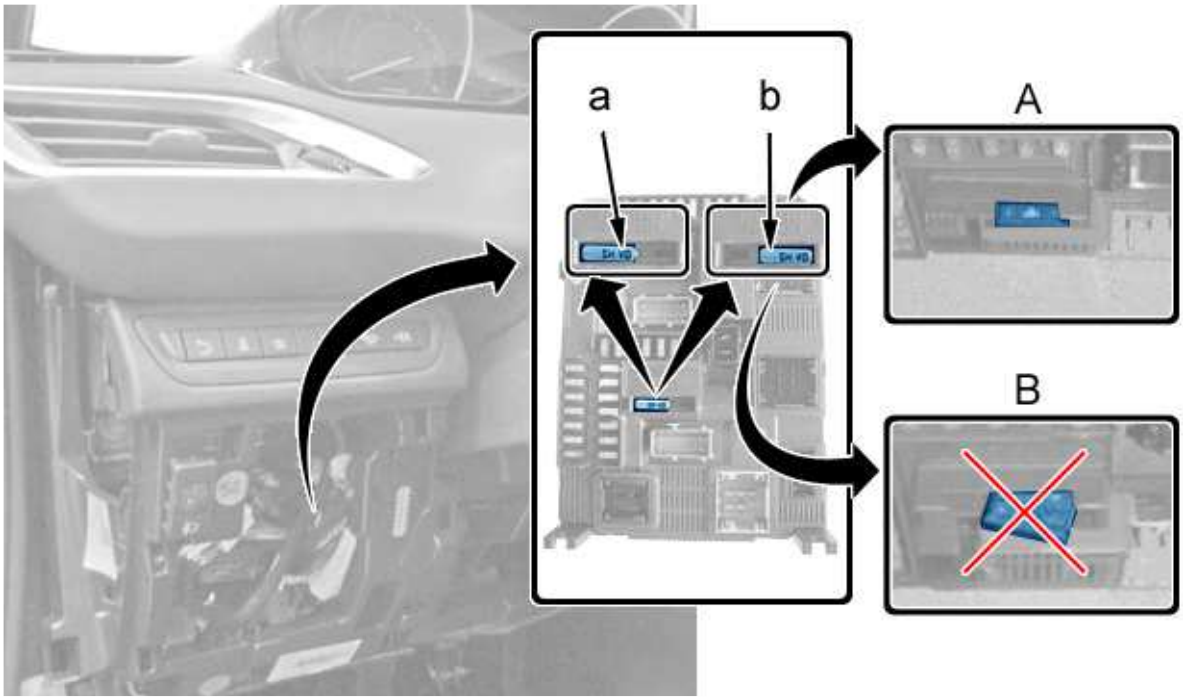

c5fm0vfd

"a" : Transit configuration.

"b" : Customer configuration.

"A" Correctly fitted in customer configuration.

"B" Not correctly fitted in customer configuration.

> **ESSENTIAL :** Because of the difficulty accessing the shunt, and the awkwardness of the angle, there is a risk of the shunt not being positioned correctly in customer configuration. An incorrect positioning of the shunt in customer configuration may risk a disconnection of the shunt during driving

Method of operation :

- Position the vehicle in a suitable spot
- If the vehicle is equipped with an automatic gearbox : Check that the selection lever is on either "P" or on "N"
- Open the front LH door and decoy the electrical system by manually closing the catch of the door lock
- Check that the vehicle's other doors are closed
- Remove the flap to access the fuses
- Check that the ignition is switched off and remove the key
- Check that nothing is connected on the diagnostic socket

> **WARNING :** Wait 4 minutes without actioning any electrical equipment

Method of operation (continued) :

- Remove the shunt from the park position "a"
- Wait for 15 seconds
- Place the shunt in the customer position "b" ; Using insulation pliers
- Press simultaneously on both extremities of the shunt ; Using insulation pliers
- Check that the shunt is correctly in position, using suitable lighting
- Reposition the catch of the door lock
- Switch on the ignition again
- Wait one second
- Switch off the ignition
- Refit the fuse access flap
- Check that the fuse access flap is flush

7 - CITROEN BERLINGO (B9) - CITROËN C-QUATRE - CITROËN C-TRIOMPHE - CITROËN C4 PALLAS - CITROËN C4 SEDAN - CITROËN C4 PICASSO (B58) - CITROËN C5 - CITROËN C6

> **NOTE :** There are two types of BSI which differ by the location of the park shunt above or below the range of fuses. The operating procedure is identical in both cases

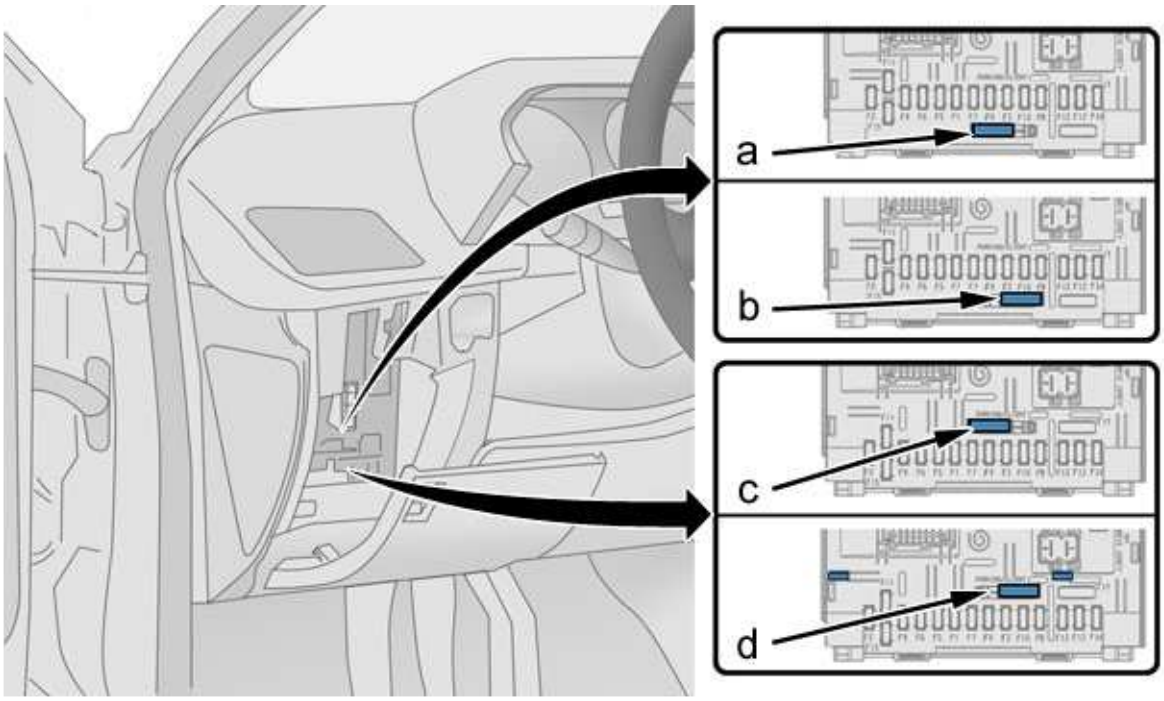

c5fm008d

"a" or "c" : Transit configuration.

"b" or "d" : Customer configuration.

> **ESSENTIAL :** An incorrect positioning of the shunt in customer configuration may risk a disconnection of the shunt during driving

Method of operation :

- Switch off the ignition
- Wait 2 minutes for the BSI to switch to standby
- Remove the flap to access the fuses
- Remove the shunt from the park position ("a" or "c")
- Place the shunt in the customer position ("b" or "d")
- Press the shunt further in, to force it fully into its housing
- Refit the fuse access flap
- Check that the fuse access flap is flush

Vehicles fitted with the radiotelephone option NG4 (Navidrive 3D) and the service module unit ; Summary of the operations to be carried out (*) :

- Wait 15 seconds between disconnecting the park mode and connecting the customer mode
- Press on the "Marque" button and check that the "Assistance" menu appears on the screen

(*) Failure to apply this method has the following effects :

- Impossible to make a telephone call using the SIM card inserted in the vehicle
- Impossible to make an emergency call or an assistance call to the marque

8 - CITROËN C4 (B7) - CITROËN DS4 - CITROËN DS5 - CITROËN C4 L (B7R) - CITROËN C4 L (CHINA) (BX3) - CITROËN C4 LOUNGE (B7M)

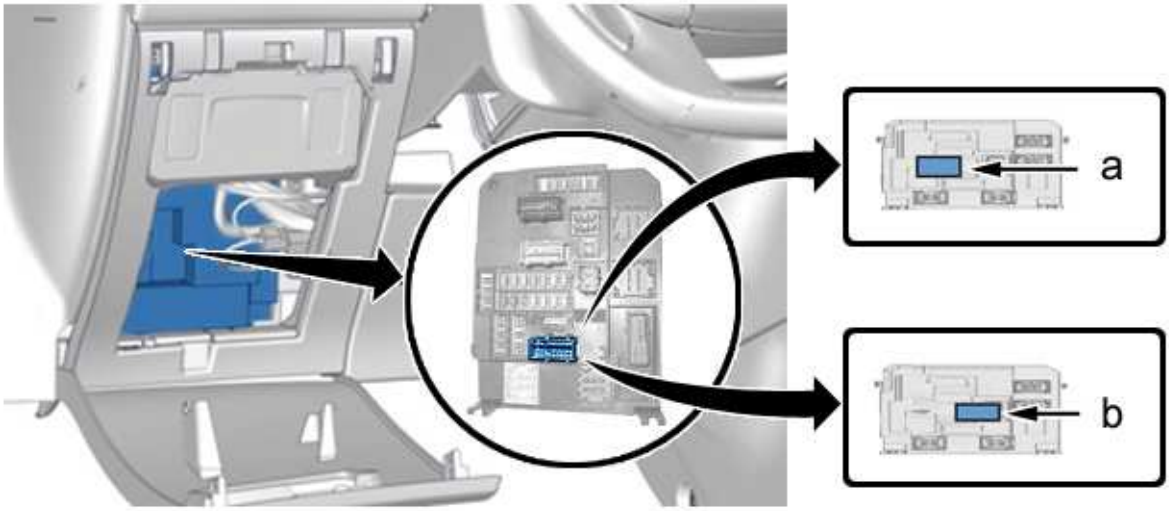

e3b7001d

"a" : Transit configuration.

"b" : Customer configuration.

ESSENTIAL : An incorrect positioning of the shunt in customer configuration may risk a

disconnection of the shunt during driving

Method of operation :

- Position the vehicle in a suitable spot
- If the vehicle is equipped with an automatic gearbox : Check that the selection lever is on either "P" or on "N"
- If the vehicle has an electric parking brake : Lifting the electric parking brake for more than 3 seconds applies the parking brake with the maximum effort (*)
- Open the front LH door and decoy the electrical system by manually closing the catch of the door lock
- Check that the vehicle's other doors are closed
- Check that the ignition is switched off and remove the key
- Check that nothing is connected on the diagnostic socket

WARNING : Wait 4 minutes without actioning any electrical equipment

Method of operation (continued) :

- Remove the flap to access the fuses
- Remove the shunt from the park position "a"
- Wait for 15 seconds
- Place the shunt in the customer position "b"
- Press the shunt further in, to force it fully into its housing
- Reposition the catch of the door lock
- Switch on the ignition again
- Wait one second
- Switch off the ignition
- Refit the fuse access flap
- Check that the fuse access flap is flush

NOTE : (*) Display on the instrument panel of a symbol and of a message "parking brake applied" in the dot matrix for a period of 3 s (applied position)

9 - CITROËN C4 CACTUS

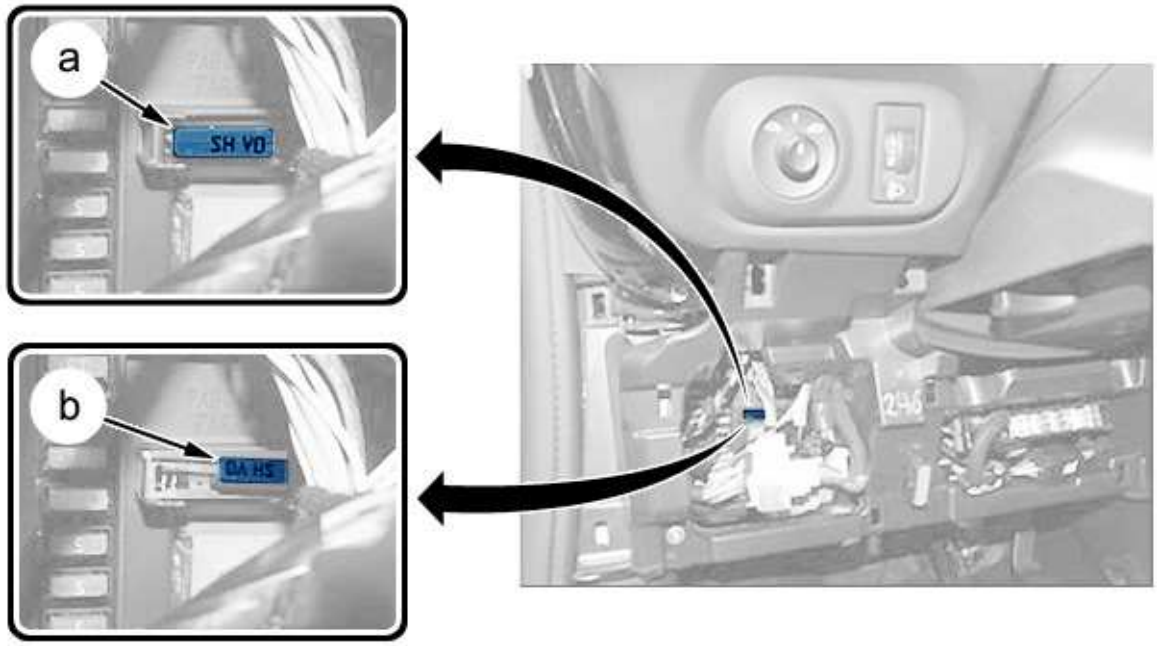

e3b707fd

"a" : Transit configuration.

"b" : Customer configuration.

> **ESSENTIAL :** An incorrect positioning of the shunt in customer configuration may risk a disconnection of the shunt during driving

Method of operation :

- Position the vehicle in a suitable spot
- If the vehicle is equipped with an automatic gearbox : Check that the selection lever is on either "P" or on "N"
- If the vehicle has an electric parking brake : Lifting the electric parking brake for more than 3 seconds applies the parking brake with the maximum effort (*)
- Open the front LH door and decoy the electrical system by manually closing the catch of the door lock
- Check that the vehicle's other doors are closed
- Check that the ignition is switched off and remove the key
- Check that nothing is connected on the diagnostic socket

> **WARNING :** Wait 4 minutes without actioning any electrical equipment

Method of operation (continued) :

- Remove the flap to access the fuses
- Remove the shunt from the park position "a"
- Wait for 15 seconds

- Place the shunt in the customer position "b"
- Press the shunt further in, to force it fully into its housing
- Reposition the catch of the door lock
- Switch on the ignition again
- Wait one second
- Switch off the ignition
- Refit the fuse access flap
- Check that the fuse access flap is flush

NOTE : (*) Display on the instrument panel of a symbol and of a message "parking brake applied" in the dot matrix for a period of 3 s (applied position)

10 - CITROËN C4 PICASSO (B78)

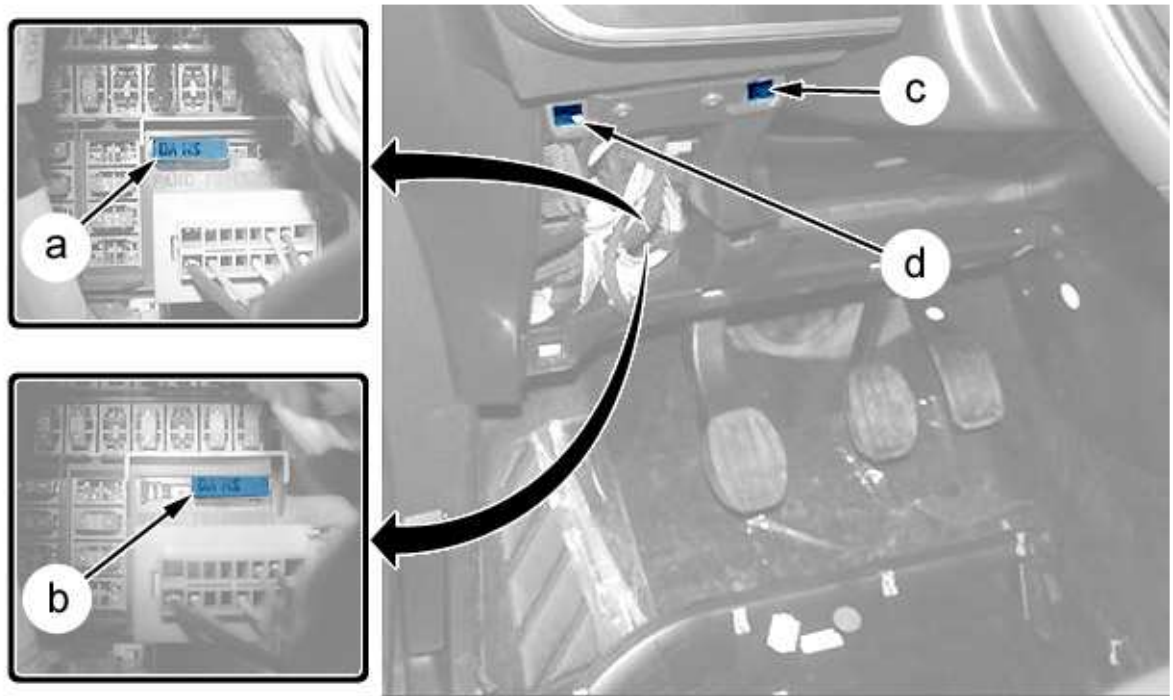

e3b7048d

"a" : Transit configuration.

"b" : Customer configuration.

ESSENTIAL : An incorrect positioning of the shunt in customer configuration may risk a disconnection of the shunt during driving

Method of operation :

- Position the vehicle in a suitable spot
- If the vehicle is equipped with an automatic gearbox : Check that the selection lever is on either "P" or on "N"
- If the vehicle has an electric parking brake : Lifting the electric parking brake for more than 3 seconds applies the parking brake with the maximum effort (*)

- Open the front LH door and decoy the electrical system by manually closing the catch of the door lock
- Check that the vehicle's other doors are closed
- Check that the ignition is switched off and remove the key
- Check that nothing is connected on the diagnostic socket

> **WARNING :** Wait 4 minutes without actioning any electrical equipment

Method of operation (continued) :

- Remove the shunt from the park position "a"
- Wait for 15 seconds
- Place the shunt in the customer position "b"
- Press the shunt further in, to force it fully into its housing
- Reposition the catch of the door lock
- Switch on the ignition again
- Wait one second
- Switch off the ignition
- Refit the fuse access flap : Starting with the top part (At "c" then at "d")
- Check that the fuse access flap is flush

NOTE : (*) Display on the instrument panel of a symbol and of a message "parking brake applied" in the dot matrix for a period of 3 s (applied position)

11 - CITROËN C8 - CITROEN DISPATCH 3

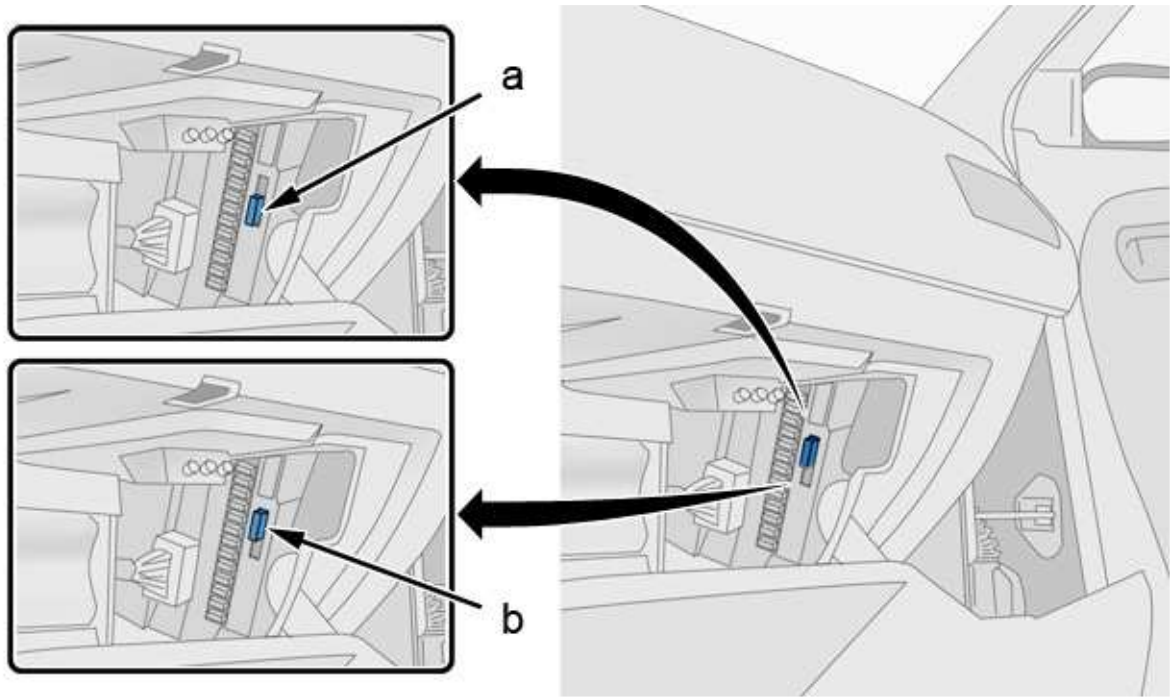

c5fm009d

"a" : Transit configuration.

"b" : Customer configuration.

> **ESSENTIAL :** An incorrect positioning of the shunt in customer configuration may risk a disconnection of the shunt during driving

Method of operation :

- Switch off the ignition
- Open the glove box
- Remove the flap to access the fuses
- Remove the shunt from the park position "a"
- Place the shunt in the customer position "b"
- Press the shunt further in, to force it fully into its housing
- Refit the fuse access flap
- Check that the fuse access flap is flush

12 - CITROEN RELAY 3 - CITROËN NEMO

Check that the vehicle is configured in customer mode and not in park mode ; Using the diagnostic equipment :

- Carry out an global test
- Choose from the list of ECUs : BSI1
- In the menu "ECU functioning mode" : Change to customer mode

13 - CITROËN C-CROSSER - CITROËN C4 AIRCROSS

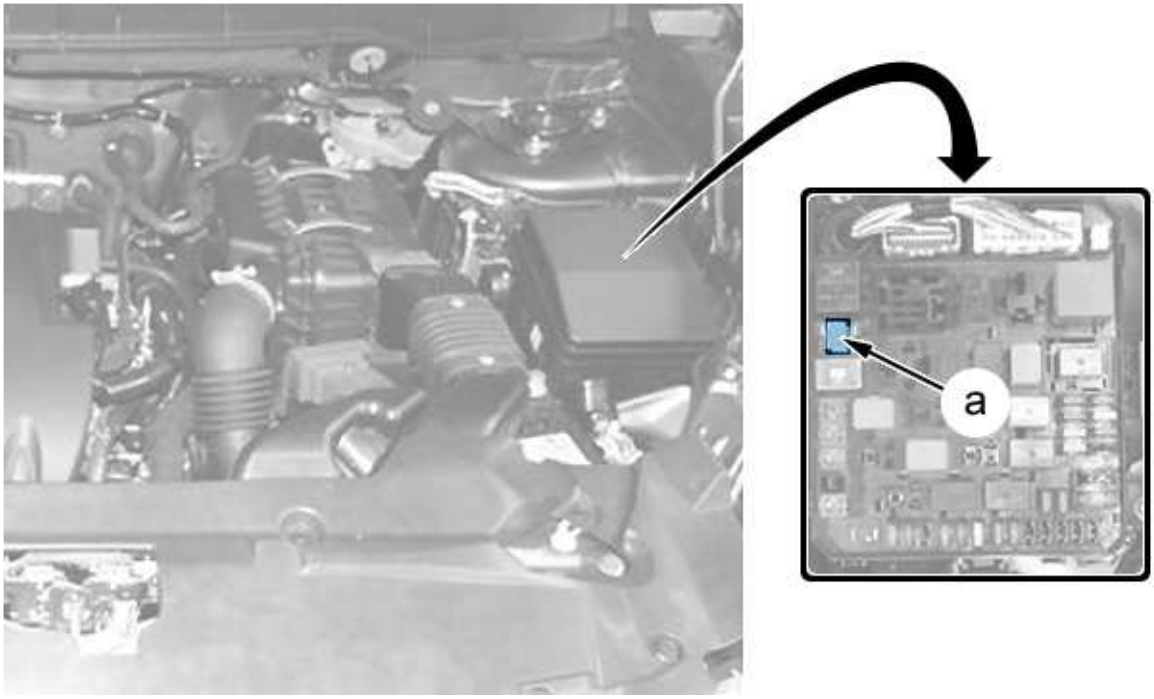

b1bmu1ud

NOTE : The shunt system of this vehicle does not require the repositioning of a fuse but

instead uses a reversible push fuse. The reversible push fuse is linked mechanically to the box with 2 stable positions. No supply available before the ignition positive with the exception of the electric seat adjustments. In disconnected mode (park shunt) the nominal consumption is only 2,2

Operation to be carried out :

- Switch off the ignition
- Remove the cover from the engine fuse box (Under bonnet)
- Press the shunt fuse down manually (at "a")
- Refit the lid of the engine fuse box

DISMANTLING - RE-ASSEMBLY : TRANSFER BOX

ESSENTIAL : Observe the safety and cleanliness recommendations

1 - TOOLING

Tool	Reference	Designation
[0414-C]  *e5ab0jqt*	[0414-C]	Transfer box seal inserter (Road wheel side)
[0414-B] 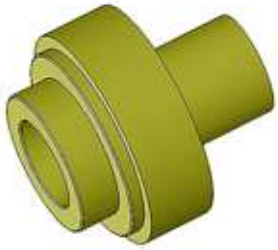 *e5ab0jrt*	[0414-B]	Transfer box seal inserter (rear axle end)

2 - REMOVING

Place the vehicle on a 2-post lift.

Disconnect the battery.

Remove :

- The front right wheel
- The protection plates under the engine
- The front right mud guard

Drain :

- The gearbox
- The transfer box

Remove :

- The front right transverse drive shaft
- **The longitudinal drive shaft**

SPECIAL FEATURE :

FOR : 1PMJ - B0FRU : 2.0L MMC EURO5 INJECTION

FOR : 1CMJ - B0FRU : 2.0L MMC EURO5 INJECTION

FOR : 1CMJ - B0FRP : EURO4 MMC 2.0L INJECTION

FOR : 1CMJ - B0FRS : EURO2 MMC 2.0L INJECTION

FOR : 1PMJ - B0FRP : EURO4 MMC 2.0L INJECTION

FOR : 1PMJ - B0FRS : EURO2 MMC 2.0L INJECTION

Remove the front intermediate exhaust pipe .

SPECIAL FEATURE :

FOR : 1CMJ - B0FRO : 1.6L MMC INJECTION

FOR : 1PMJ - B0FRO : 1.6L MMC INJECTION

Remove the pre-catalyst.

SPECIAL FEATURE :

FOR : 1PMJ - B0FRV : DIESEL 1.8L MMC 103KW

FOR : 1CMJ - B0FRV : DIESEL 1.8L MMC 103KW

FOR : 1PMJ - B0FRQ : 1.8L MMC DIESEL

FOR : 1CMJ - B0FRQ : 1.8L MMC DIESEL

Remove catalytic converter .

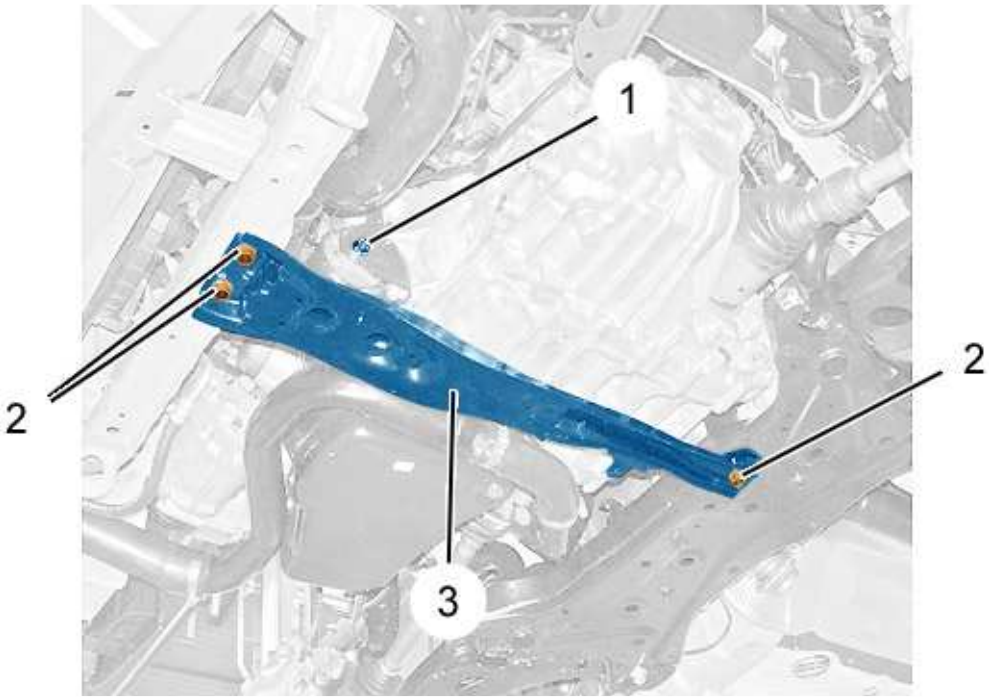

b2dg00sd

Remove :

- The bolt/nut assembly (1)
- The bolts (2)
- The subframe extension (3)

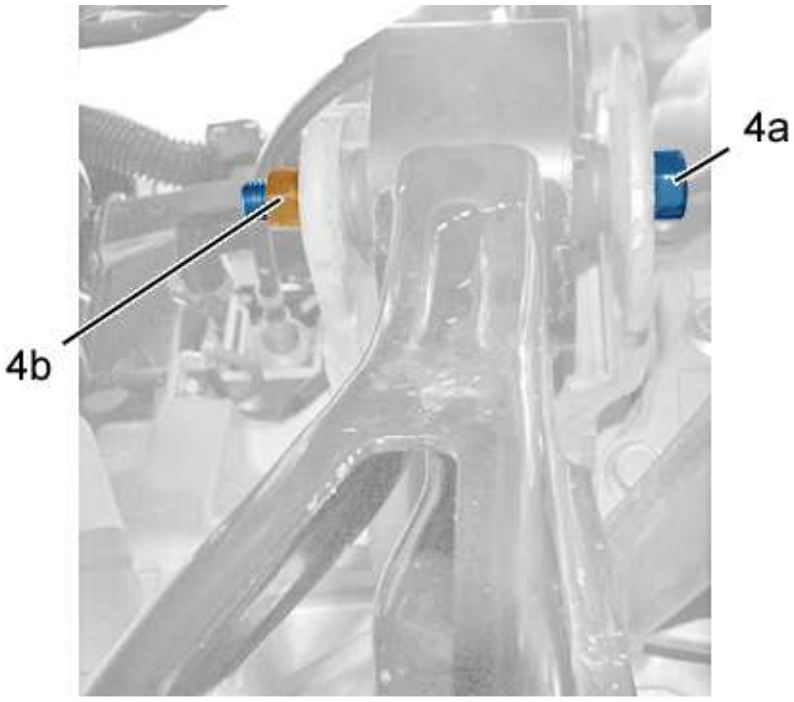

b2dg00td

Remove : The bolt/nut assembly (4).

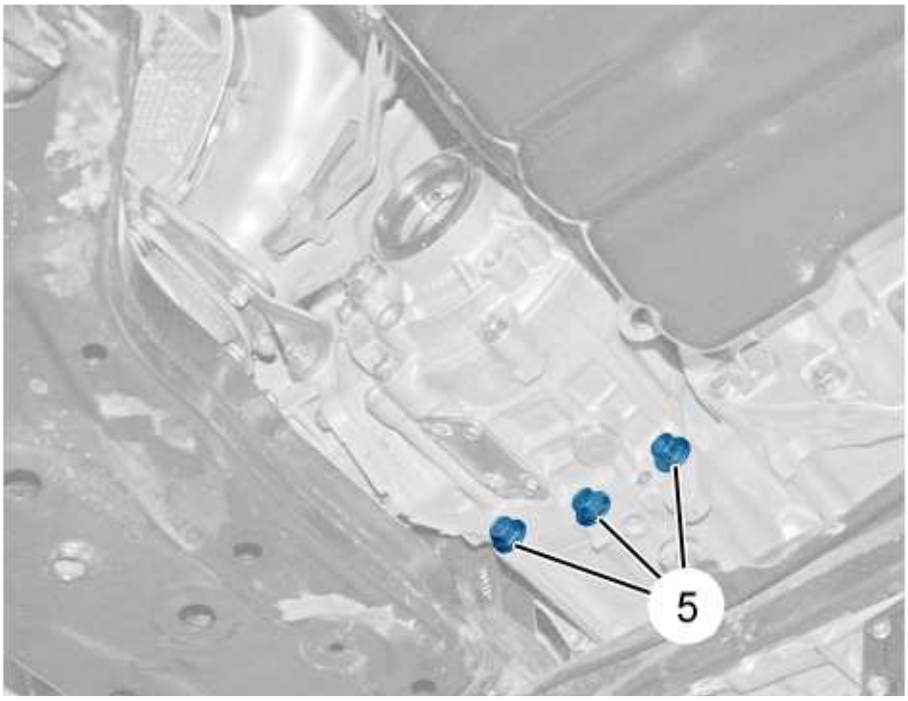

b2dg00ud

Remove the bolts (5).

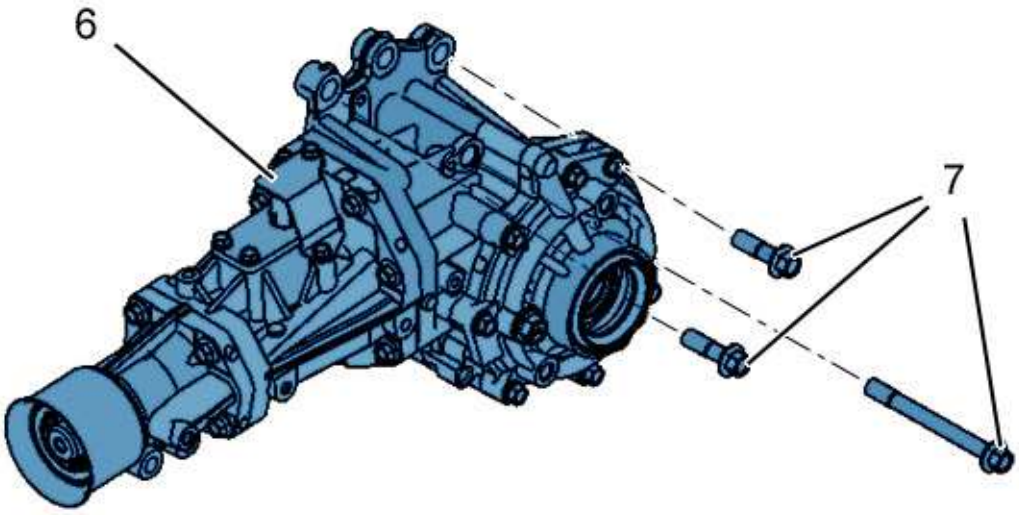

b2dg00vd

Remove the bolts (7).

NOTE : The following operation requires two operators

Tilt the engine forward.

Remove : The transfer box (6).

3 - REFITTING

Adhere to the tightening torques.

SPECIAL FEATURE :

FOR : 1CMJ - B0FRU : 2.0L MMC EURO5 INJECTION

FOR : 1CMJ - B0FRV : DIESEL 1.8L MMC 103KW

FOR : 1CMJ - B0FRP : EURO4 MMC 2.0L INJECTION

FOR : 1CMJ - B0FRS : EURO2 MMC 2.0L INJECTION

FOR : 1CMJ - B0FRQ : 1.8L MMC DIESEL

FOR : 1CMJ - B0FRO : 1.6L MMC INJECTION

Tightening torques :

- **Road wheels**
- **Driveshafts**
- **Front suspension**
- **Transfer box**

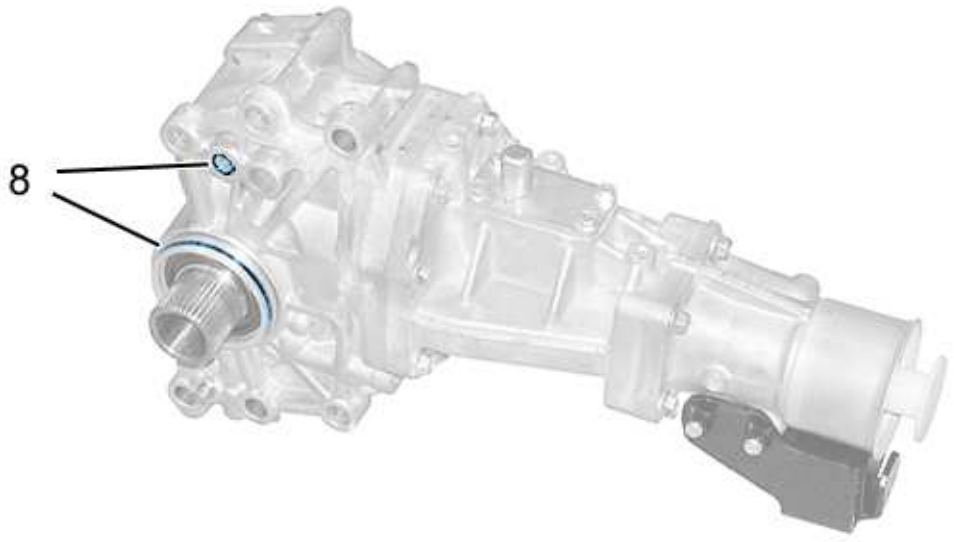

b2dg00wd

Check the condition of the O-rings (8) ; Replace them if necessary.

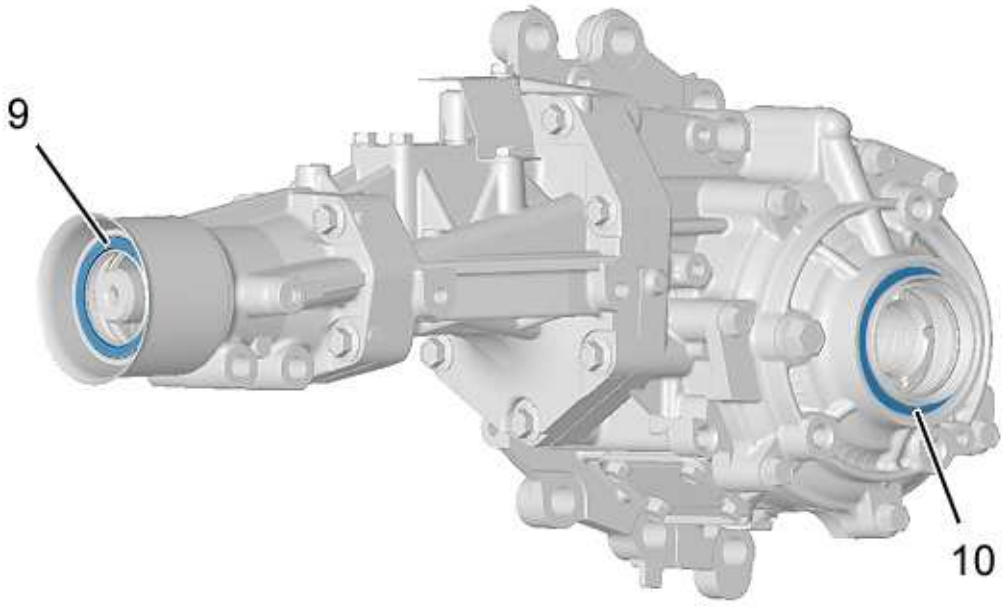

b2dg00xd

Replace :

- The seal (9) ; Using tool [0414-B]
- The seal (10) ; Using tool [0414-C]

NOTE : The following operation requires two operators

Tilt the engine forward.

Refit :

- The transfer box (6)
- The screws (5) and (7)

Refit :

- The bolt/nut assembly (4)
- The subframe extension (3)
- The bolts (2)
- The bolt/nut assembly (1)
- **The longitudinal drive shaft**
- The front right transverse drive shaft

SPECIAL FEATURE :

FOR : 1PMJ - B0FRU : 2.0L MMC EURO5 INJECTION

FOR : 1CMJ - B0FRU : 2.0L MMC EURO5 INJECTION

FOR : 1CMJ - B0FRP : EURO4 MMC 2.0L INJECTION

FOR : 1CMJ - B0FRS : EURO2 MMC 2.0L INJECTION

FOR : 1PMJ - B0FRS : EURO2 MMC 2.0L INJECTION

FOR : 1PMJ - B0FRP : EURO4 MMC 2.0L INJECTION

Refit the front intermediate exhaust pipe .

SPECIAL FEATURE :

FOR : 1CMJ - B0FRO : 1.6L MMC INJECTION

FOR : 1PMJ - B0FRO : 1.6L MMC INJECTION

Refit the pre-catalytic converter .

SPECIAL FEATURE :

FOR : 1PMJ - B0FRU : 2.0L MMC EURO5 INJECTION

FOR : 1CMJ - B0FRU : 2.0L MMC EURO5 INJECTION

FOR : 1PMJ - B0FRV : DIESEL 1.8L MMC 103KW

FOR : 1CMJ - B0FRV : DIESEL 1.8L MMC 103KW

FOR : 1CMJ - B0FRQ : 1.8L MMC DIESEL

FOR : 1PMJ - B0FRQ : 1.8L MMC DIESEL

Refit the catalytic converter .

Carry out :

- Filling of the gearbox
- The filling and topping up of the transfer box

Refit :

- The front right mud guard
- The protection plates under the engine
- The front right wheel

> **WARNING :** Perform the operations to be carried out following reconnection of the battery

Reconnect the battery.

DISMANTLING - RE-ASSEMBLY : PROPELLER SHAFT

ESSENTIAL : Observe the safety and cleanliness recommendations

1 - TOOLING

Tool	Reference	Designation
[0414-B]  *e5ab0jrt*	[0414-B]	Transfer box lip seal fitting drift

2 - REMOVING

Drain the transfer box.

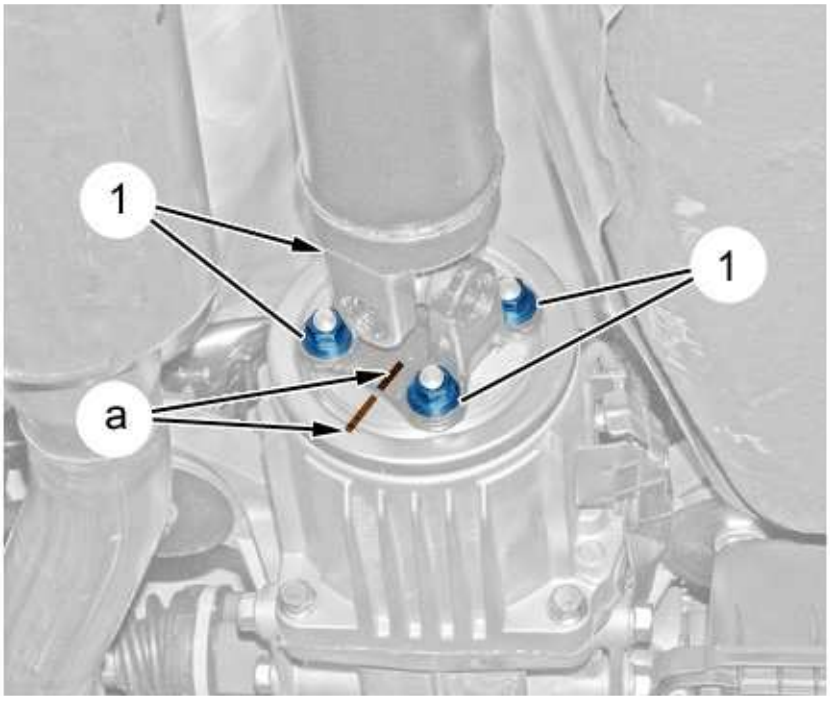

b2fm00nd

WARNING : If the longitudinal driveshaft is to be reused, mark the driveshaft and the rear axle piloted clutch (at "a")

Remove the nuts (1).

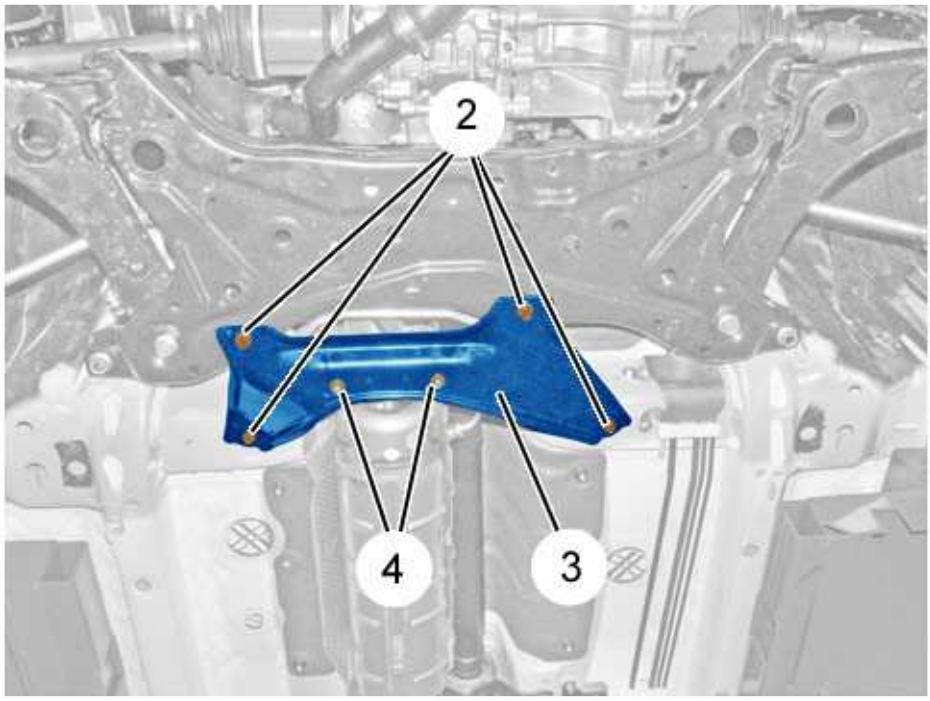

b2fm00pd

Remove (according to engine) :

- The nuts (4)
- The bolts (2)
- The support plate (3)

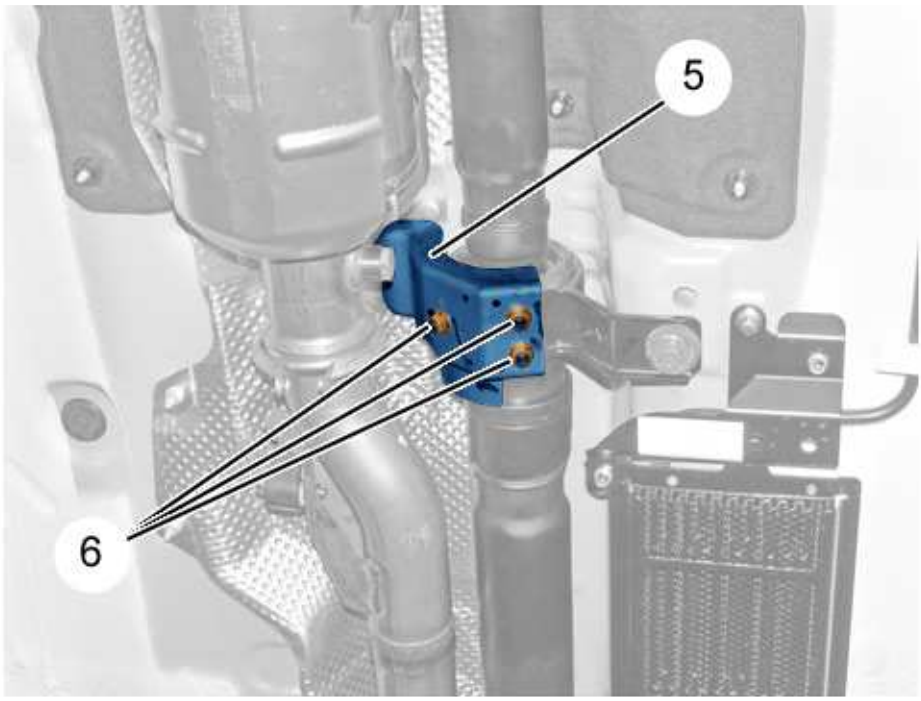

b2fm00qd

Remove :

- The nuts (6)
- Protection plate (5)

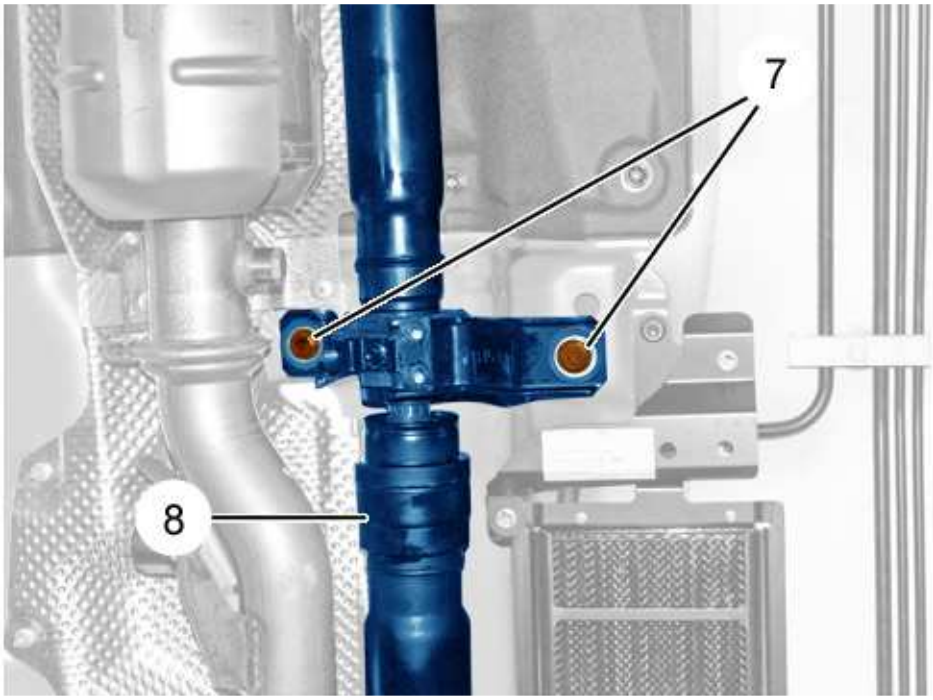

b2fg091d

Remove :

- The bolts (7)
- The longitudinal drive shaft (8)

3 - REFITTING

SPECIAL FEATURE :

FOR : 1CMJ - B0G0H : CONTINUOUS TRANSMISSION 4X4

FOR : 1CMJ - B0G0Y : 6-SPEED MANUAL GEARBOX TYPE STT 4X4

FOR : 1CMJ - B0G0C : BVM5 4X4

FOR : 1CMJ - B0G0G : 4X4 6-SPEED MANUAL GEARBOX

WARNING : Adhere to the tightening torques

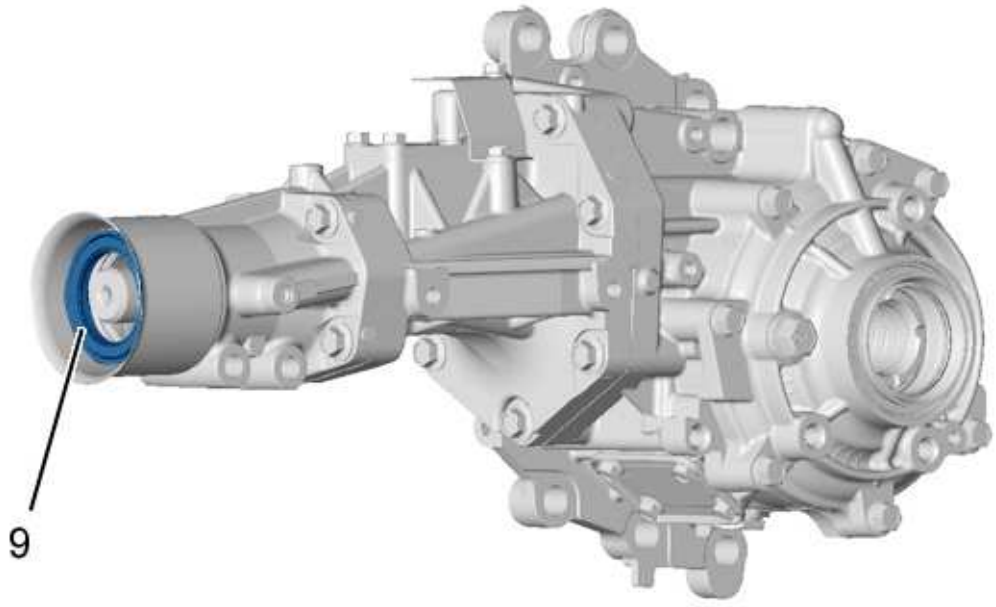

b2fg092t

Extract the lip seal (9).

Refit lipped seal (9) (new) ; Using tool [0414-B].

NOTE : Coat the end of the driveshaft (transfer box end) with transfer box oil

Refit :

- The longitudinal drive shaft (8)
- The bolts (7)
- The nuts and washers (1)
- Protection plate (5)
- The nuts (6)

Refit (according to engine) :

- The support plate (3)
- The bolts (2)
- The nuts (4)

Fill the transfer box.

DRAIN - REFILL : TRANSFER BOX

ESSENTIAL : Observe the safety and cleanliness recommendations

1 - TOOLING

Facom 376A type manual oil syringe.

2 - DRAINING INTERVALS

Changing the oil :

- Engines: diesel : 60 000 kms
- Petrol engine : 75 000 kms

3 - DRAIN AND REFILL

WARNING : The transfer box housing is separate from the gearbox housing ; Drain and lubricate the transfer box separately

WARNING : The transfer box is lubricated with a special oil

Lift and support the vehicle.

Remove the under engine protection .

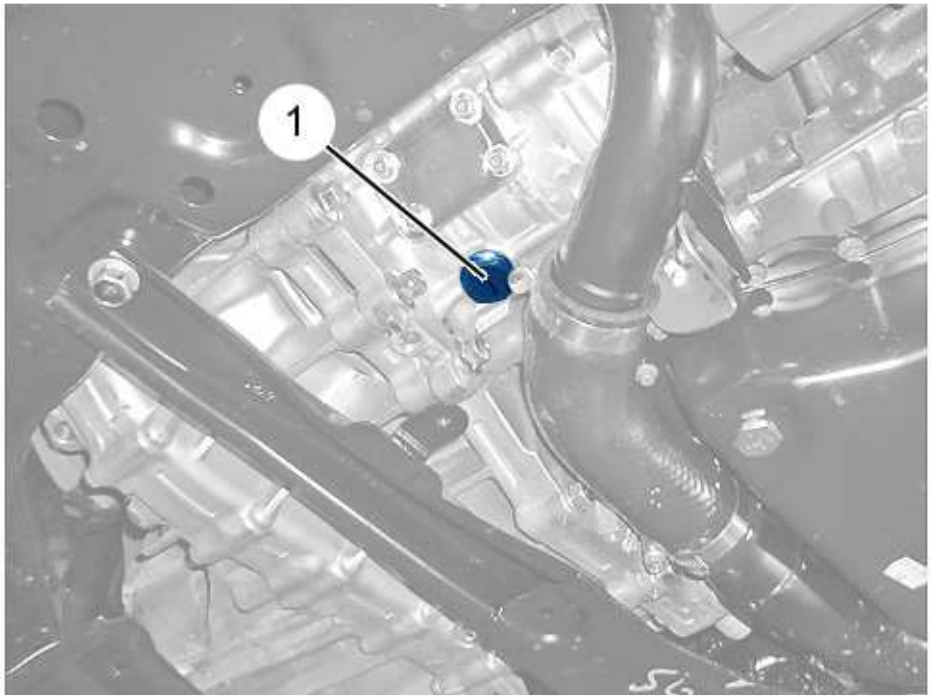

b2cm01ed

Remove the drain plug (1).

NOTE : About 0,5 litres of oil should drain out

4 - REFILLING

WARNING : Adhere to the tightening torques

Engine flywheel retaining pin (1).

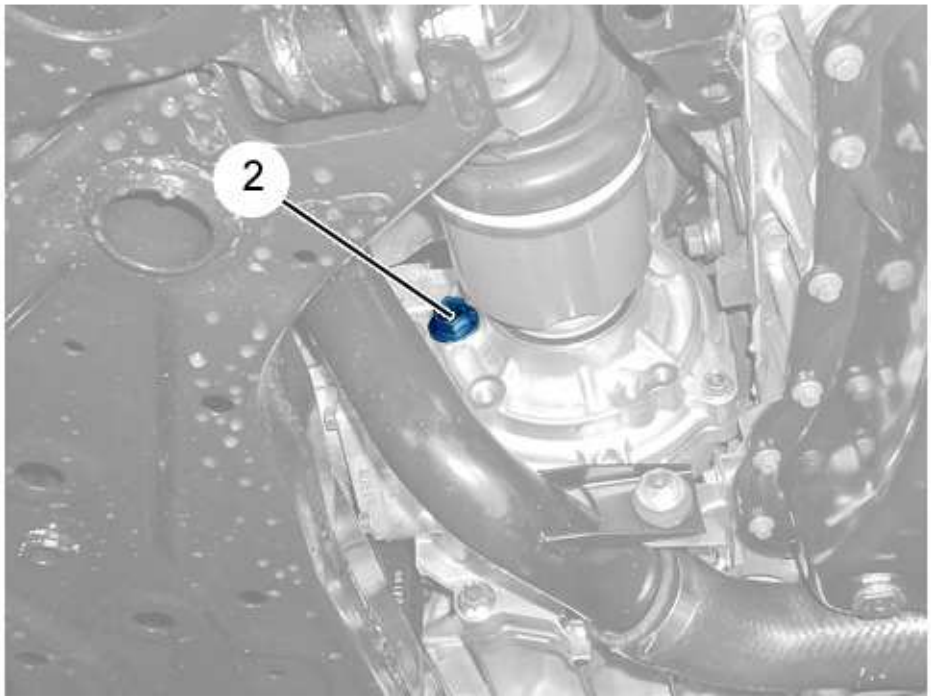

b2cm01fd

Remove the filler plug (2).

Fill and top up with the recommended oil ; Using a FACOM 376A type manual oil syringe.

Oil capacity of the transfer box :

- 0,54 litre for manual gearboxes
- 0,49 litre for CVT gearboxes

Type of oil : TOTAL TRANSMISSION X4 .

Classification : GL-5 SAE 80.

5 - FLUID LEVEL

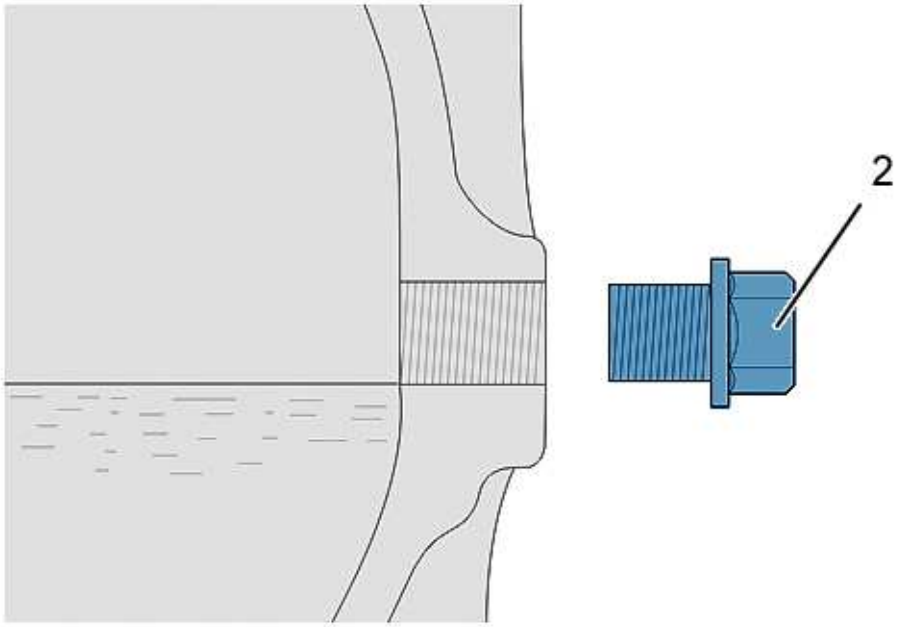

b1fm00bd

Check that the oil level is just below the lower edge of the filling hole.

Refit the filler plug (2).

Refit the under-engine protection .

TIGHTENING TORQUES : TRANSFER BOX - REAR AXLE

1 - TRANSFER BOX

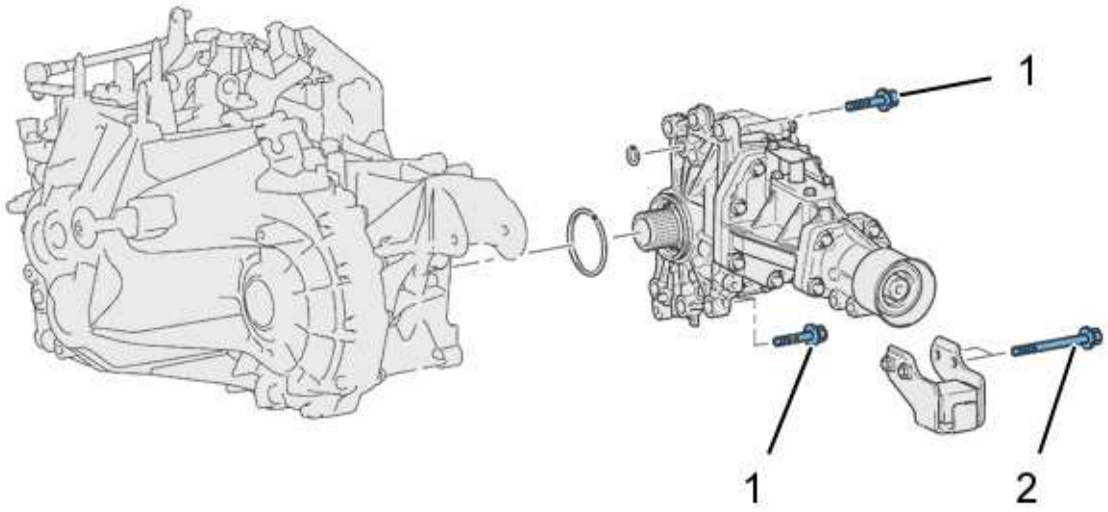

b2dm001d

Referen	Designation	Tightening torque
(1)	bolts : Transfer box/ gearbox	6,9 daNm
(2)	Bracket bolt(s)/Transfer box	4,5 daNm

2 - REAR AXLE

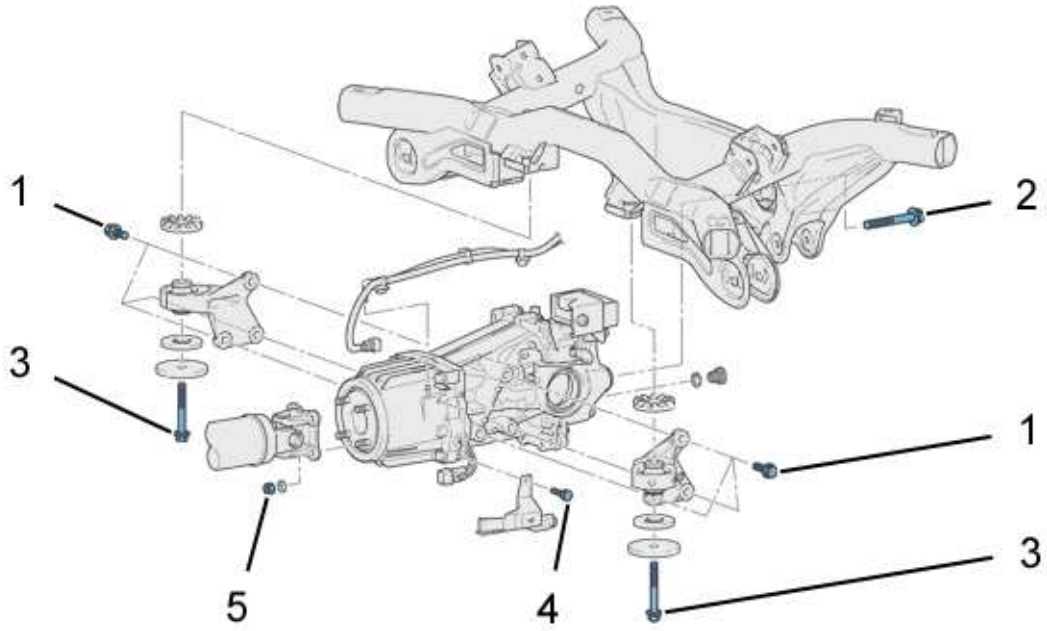

b2eb003d

Referen	Designation	Tightening torque
(1)	bolts : Axle support / Rear axle	9,5 daNm
(2)	bolts : Rear axle / Rear sub-frame	11 daNm
(3)	bolts : Axle support / Rear sub-frame	7,1 daNm
(4)	bolts : Connector protection	1 daNm
(5)	Nut : Propeller shaft / Rear axle	5,4 daNm

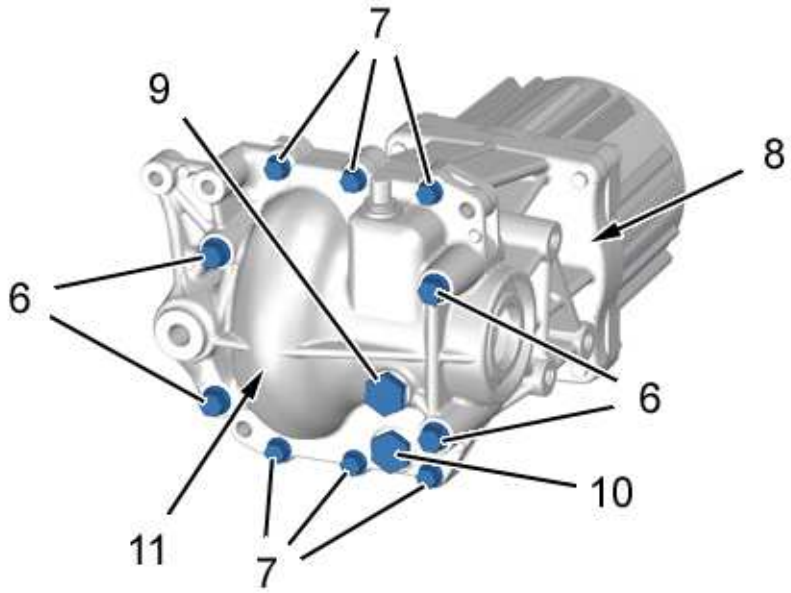

b2eb004d

(6)	Casing bolts (Bearing)	4,8 daNm
(7)	Casing bolts	2,3 daNm
(8)	Axle shaft nut	19 daNm
(9)	Level plug	3,2 daNm
(10)	drain plug	3,2 daNm
(11)	bolts : crown wheel	4,1 daNm

3 - REAR AXLE PILOTED CLUTCH

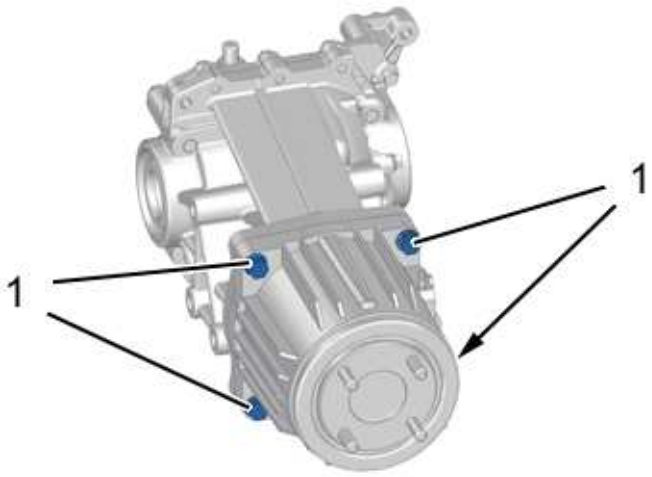

b2eb005d

Referen	Designation	Tightening torque
(1)	bolts : Rear axle piloted clutch / Rear axle	4,8 daNm

DISMANTLING - RE-ASSEMBLY : EXHAUST SYSTEM

ESSENTIAL : Observe the safety and cleanliness recommendations

1 - TOOLING

Equipment : Component lift.

2 - EXHAUST SILENCER

Put the vehicle on a hoist.

2 - 1 - Removing

ESSENTIAL : Wait at least one hour before carrying out any work on the exhaust line

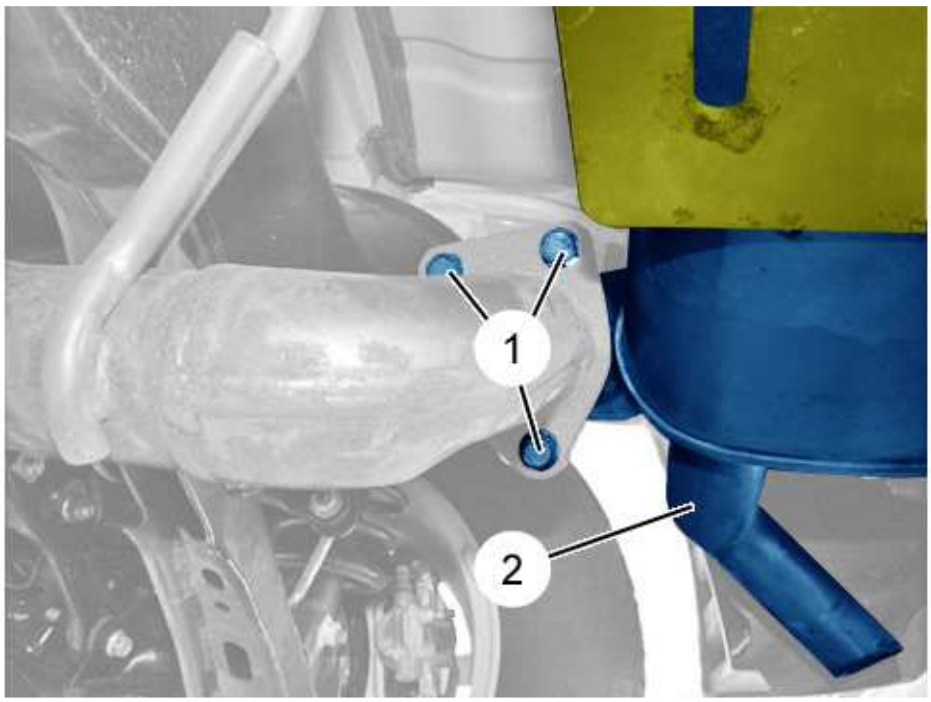

b1jg0o6d

Place the component lift under the exhaust silencer (2).

Remove the 3 bolts (1).

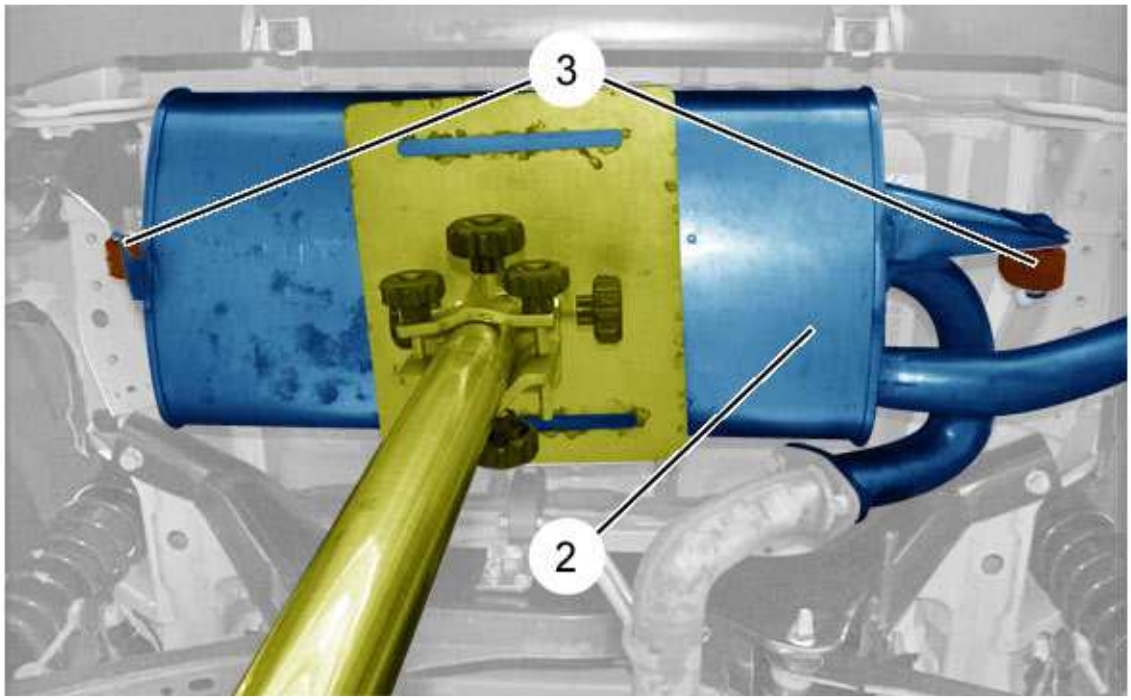

b1jg0o7d

Uncouple the hangers (3) from the silencer (2).

Remove the exhaust silencer (2) ; (with the seal) ; Using the component lift .

2 - 2 - Refitting

WARNING : Adhere to the tightening torques

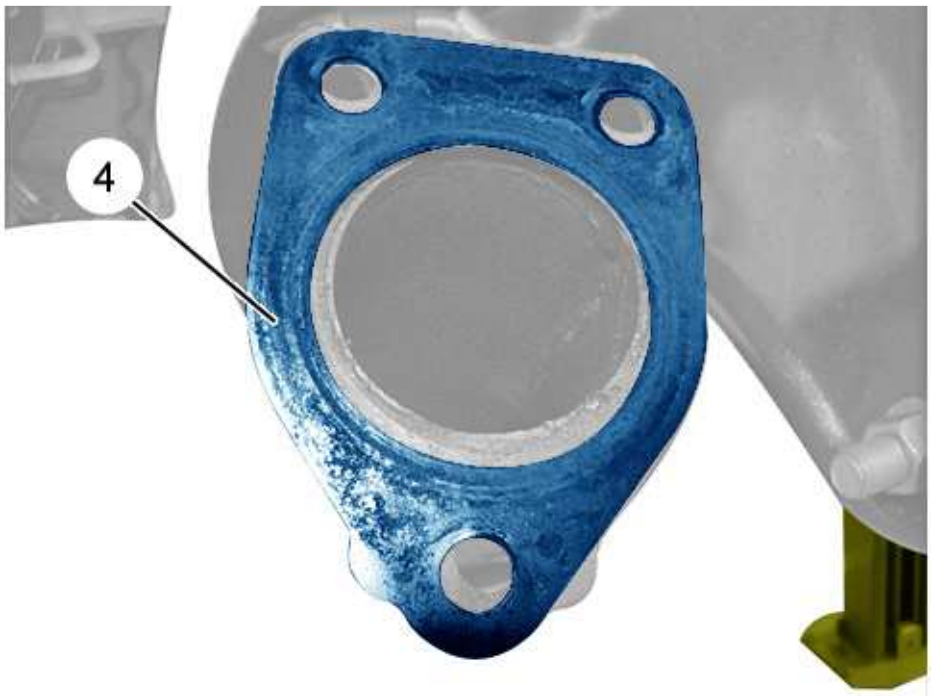

b1jg0o8d

> **WARNING :** Always replace the seal (4)

> **WARNING :** Always replace the 3 bolts (1)

Refit :

- The seal (4) of the silencer (2) (New)
- The exhaust silencer (2) ; Using the component lift
- The 3 bolts (1)

> **WARNING :** Replace the faulty exhaust flexible mountings

Couple up the flexible mountings (3).

Remove the unit lifting jack.

Start the engine.

Check that there are no leaks.

3 - INTERMEDIATE EXHAUST LINE

3 - 1 - Removing

> **ESSENTIAL :** Wait at least one hour before carrying out any work on the exhaust line

Put the vehicle on a hoist.

Disconnect the ancillaries battery.

Remove the upstream and downstream oxygen sensors (according to equipment).

Support the intermediate exhaust line ; Using the component lift).

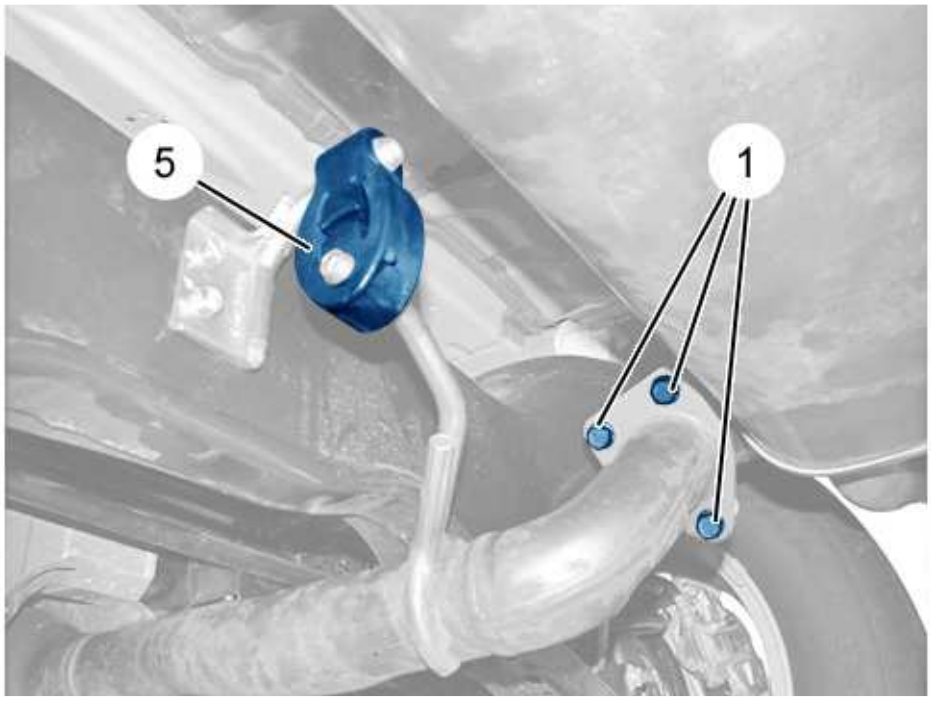

b1jg0o9d

Remove the 3 bolts (1).

Uncouple the hanger (5).

Remove the seal (4).

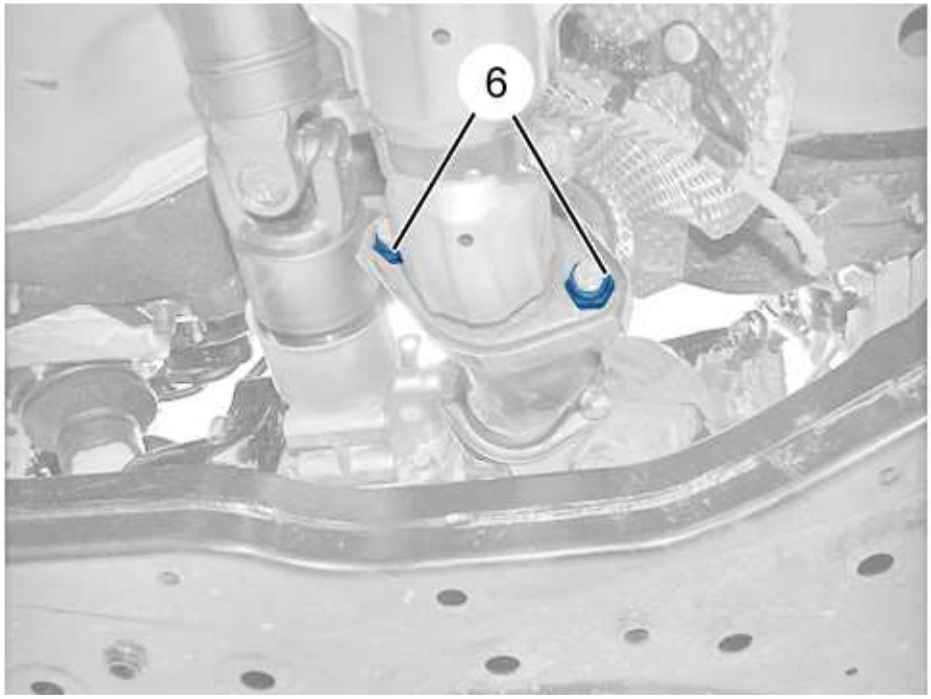

b1jg0owd

Remove :

- The nuts (6)
- The seal on the exhaust front pipe

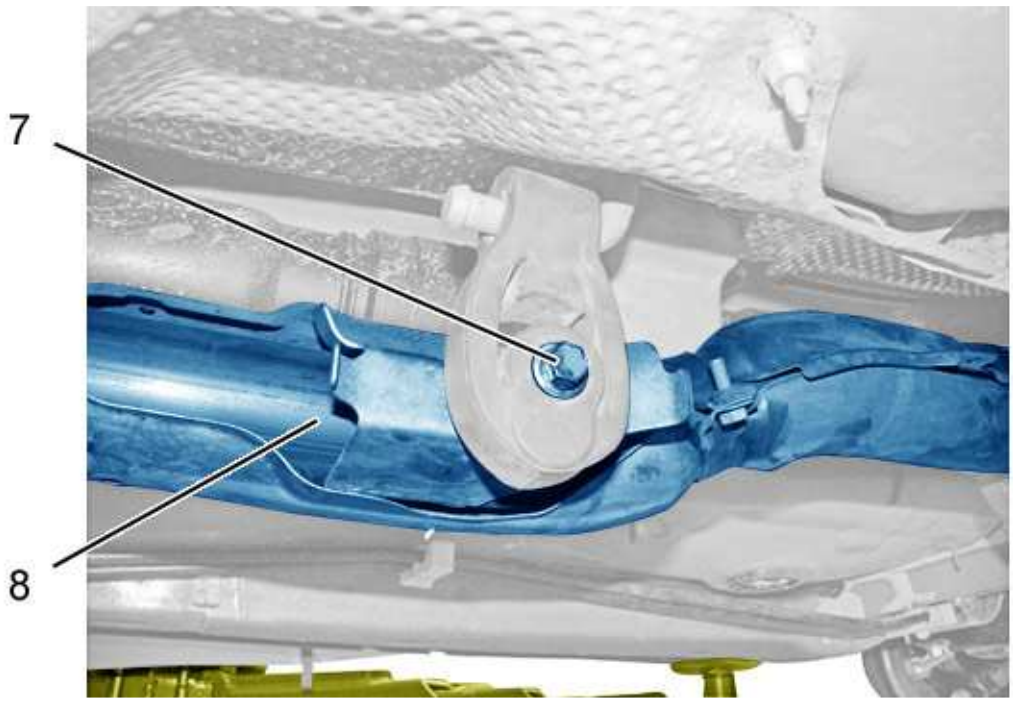

b1jg0oxd

Remove :

- The bolt (7)
- The intermediate exhaust line (8) ; Using the component lift

3 - 2 - Refitting

> **WARNING :** Adhere to the tightening torques

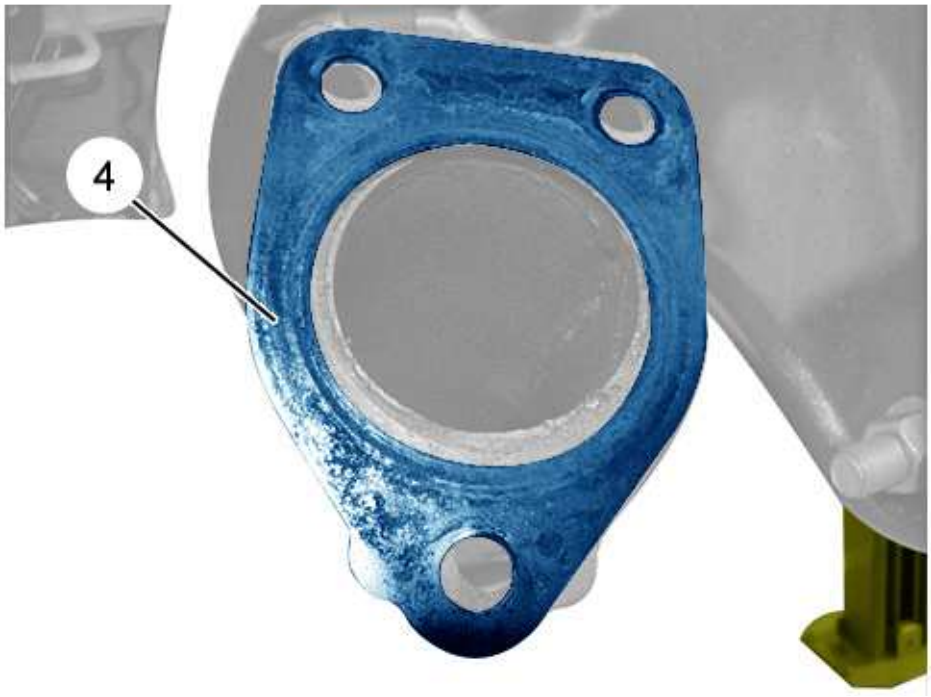

b1jg0o8d

> **WARNING :** Always replace the seal (4)

> **WARNING :** Always replace the 3 bolts (1)

> **WARNING :** Always replace : The seal on the exhaust front pipe

Refit :

- The seal (4) of the silencer (2) (New)
- The intermediate exhaust line (8) ; Using the component lift
- The 3 bolts (1) (new)
- The seal on the exhaust front pipe (new)
- The nuts (6)
- The (7) bolt

Couple up the hanger (5).

Remove the unit lifting jack.

Refit the upstream and downstream oxygen sensors (according to equipment).

> **WARNING :** Perform the operations that are required following a reconnection of the ancillaries battery

Reconnect the ancillaries battery.

Start the engine.

Check that there are no leaks.

4 - FRONT EXHAUST PIPE

4 - 1 - Removing

Put the vehicle on a hoist.

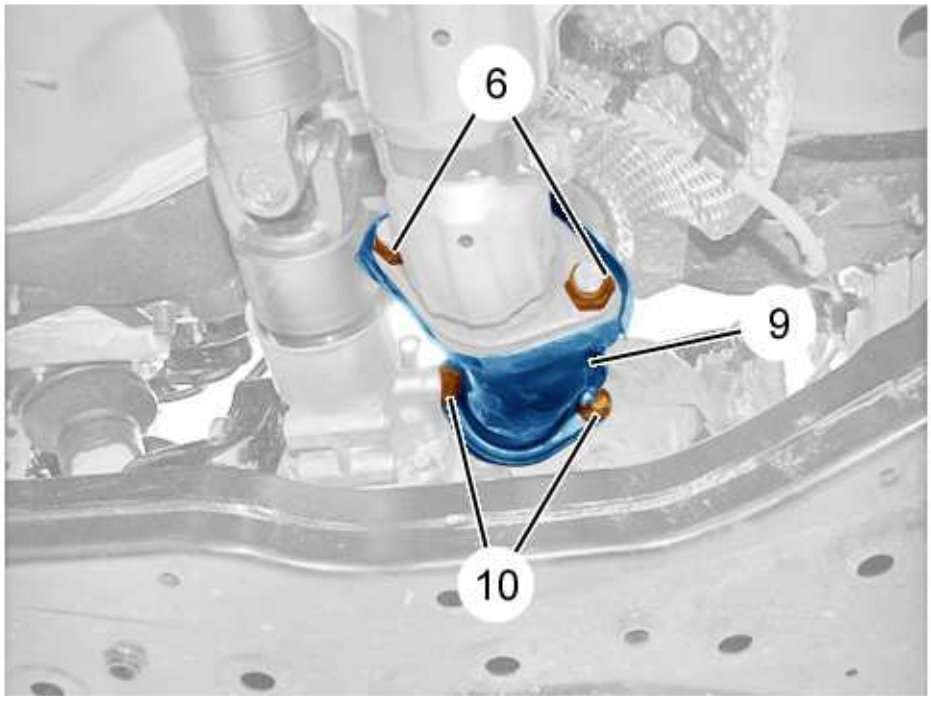

b1jg0oyd

Remove :

- Remove the bolts (10) complete with their springs
- The nuts (6)
- The front exhaust pipe (9) (With the seals)

4 - 2 - Refitting

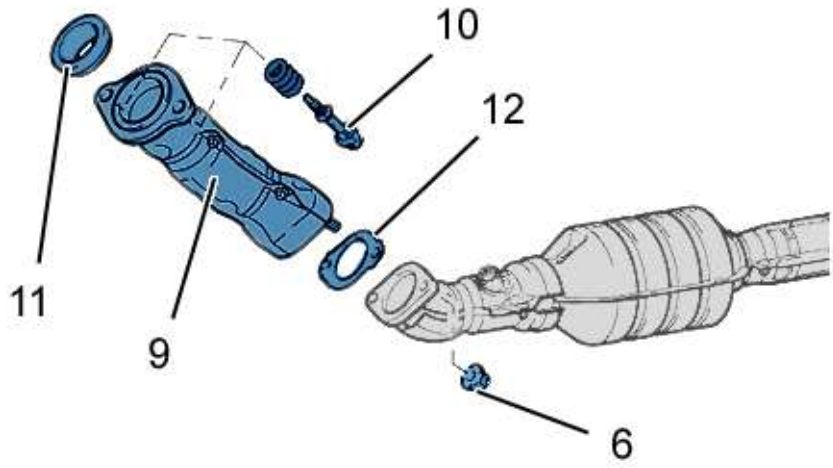

b1jg0ozd

WARNING : Always replace the bolts (10)

WARNING : Replace the seals (11), (12)

Refit :

- The exhaust front pipe (9) with the seals (11), (12)
- The bolts (10) together with their springs
- The nuts (6)

Start the engine.

Check that there are no leaks.

TIGHTENING TORQUES : EXHAUST LINE (1.8 DIESEL (4X4), (4X2))

WARNING : Adhere to the tightening torques

1 - CATALYTIC CONVERTER

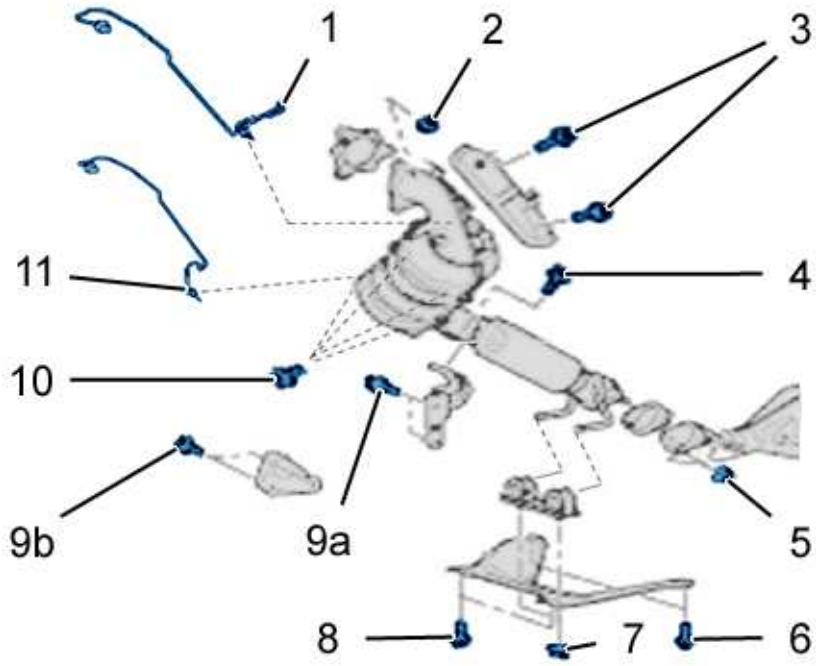

b1jb0g6d

Referenc	Designation	Tightening torque
(1)	Upstream temperature sensor	3 daNm
(2)	nuts (Catalytic converter fixing / Turbocharger)	4,1 daNm
(3)	bolts (Heat screen fixings)	1,6 daNm
(4)	bolts (Catalytic converter fixing / Bracket)	4,7 daNm
(5)	nuts (Catalytic converter fixing / Particle filter)	5,9 daNm
(6)	bolts (Fixing of support plate / Chassis)	2 daNm
(7)	nuts (Catalytic converter hanger fixing)	0,95 daNm
(8)	bolts (Fixing of support plate / Front subframe)	4,7 daNm
(9a)	bolts (Fixing of catalytic converter support / (4x2) gearbox)	4,7 daNm
(9b)	bolts (Fixing of catalytic converter support / 4X4 transfer box)	4,7 daNm
(10)	Nut (Heat screen fixings)	1,6 daNm
(11)	Downstream temperature sensor	3 daNm

2 - PARTICLE FILTER

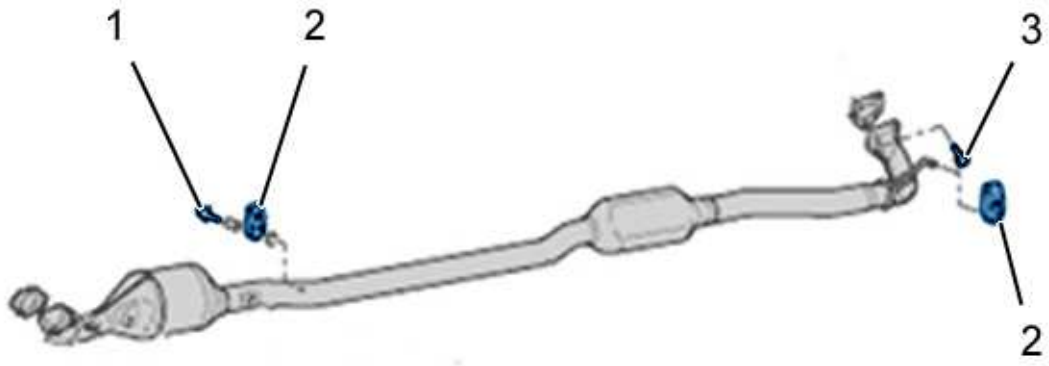

b1jb0eyd

Reference	Designation	Tightening torque
(1)	bolts (Front hanger fixing)	0,95 daNm
(2)	Hangers	-
(3)	bolts (Particle filter fixing / Rear silencer)	4,1 daNm

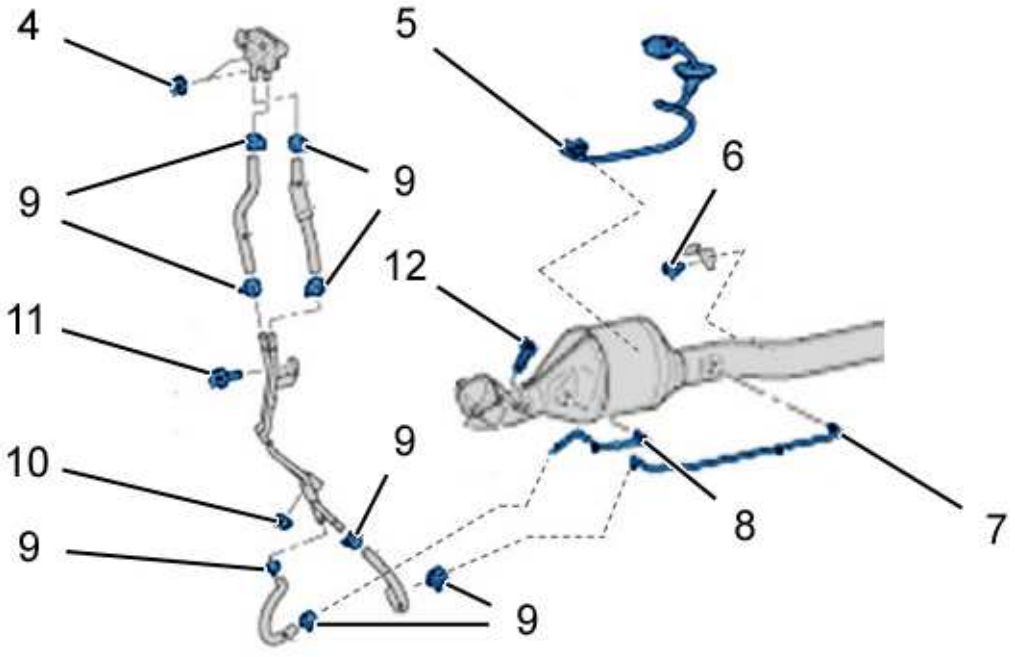

b1jb0ezd

Referenc	Designation	Tightening torque
(4)	nuts (Fixing of particle filter differential	0,5 daNm

	pressure sensor)	
(5)	Exhaust gas temperature sensor	3 daNm
(6)	bolts (Exhaust temperature sensor harness support)	1,1 daNm
(7)	Downstream pressure take-off pipe union	3,6 daNm
(8)	Upstream pressure take-off pipe union	3,6 daNm
(9)	Spring clip	-
(10)	Nut (Fixing of exhaust gas pressure take-off pipes)	0,95 daNm
(11)	bolts (Fixing of exhaust gas pressure take-off pipes)	2,3 daNm
(12)	bolts (Flange of downstream/upstream pressure take-off pipes)	0,8 daNm

3 - CATALYTIC CONVERTER AND PARTICLE FILTER

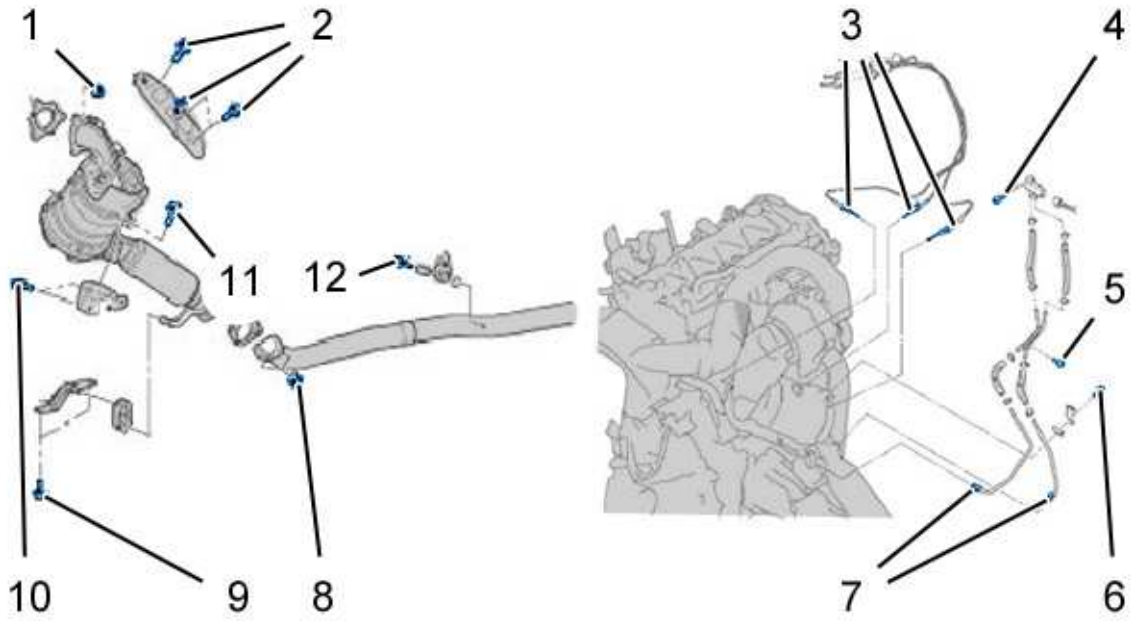

b1jb0g7d

Reference	Designation	Tightening torque
(1)	nuts (Catalytic converter fixing)	4,1 daNm
(2)	bolts (Heat screen fixings)	1,6 daNm
(3)	Temperature sensor	3 daNm
(4)	nuts (Fixing of particle filter differential pressure sensor)	0,5 daNm
(5)	bolts (Fixing of exhaust gas pressure take-off pipes)	1,1 daNm
(6)	bolts (Fixing of exhaust gas pressure take-off pipes)	8 daNm
(7)	Union (Exhaust gas pressure take-off pipes)	3 daNm
(8)	nuts (Catalytic converter fixing)	5,9 daNm

(9)	bolts (Fixing of support plate / Front subframe)	4,7 daNm
(10)	bolts (Fixing of catalytic converter support)	4,7 daNm
(11)	bolts (Catalytic converter fixing / Bracket)	4,7 daNm
(12)	bolts (Flexible mountings fixing)	0,95 daNm

4 - REAR SILENCER

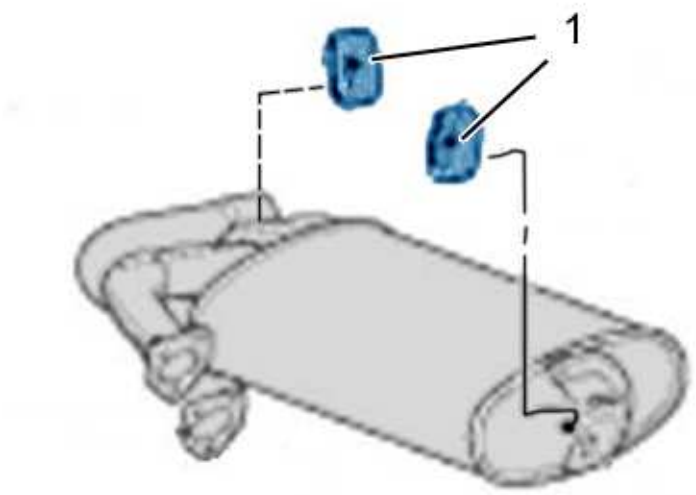

b1jb0f0d

Reference	Designation	Tightening torque
(1)	Hangers	-

DISMANTLING - RE-ASSEMBLY : OXYGEN SENSOR

ESSENTIAL : Observe the safety and cleanliness recommendations

WARNING : For any operation on an oxygen sensor : The oxygen sensor connector must be cleaned dry. It is strictly prohibited to use solvents or contact greases for cleaning the connectors of the upstream and downstream oxygen sensors

1 - TOOLING

tool	Reference	Designation
[4386-T] 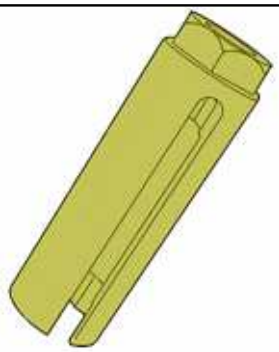 *e5ag07ct*	[4386-T]	slit socket 22 mm
[1350-ZZ] 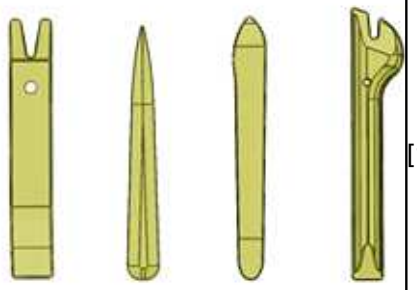 *e5ag02mt*	[1350-ZZ]	Stripping tools

2 - LOCATION

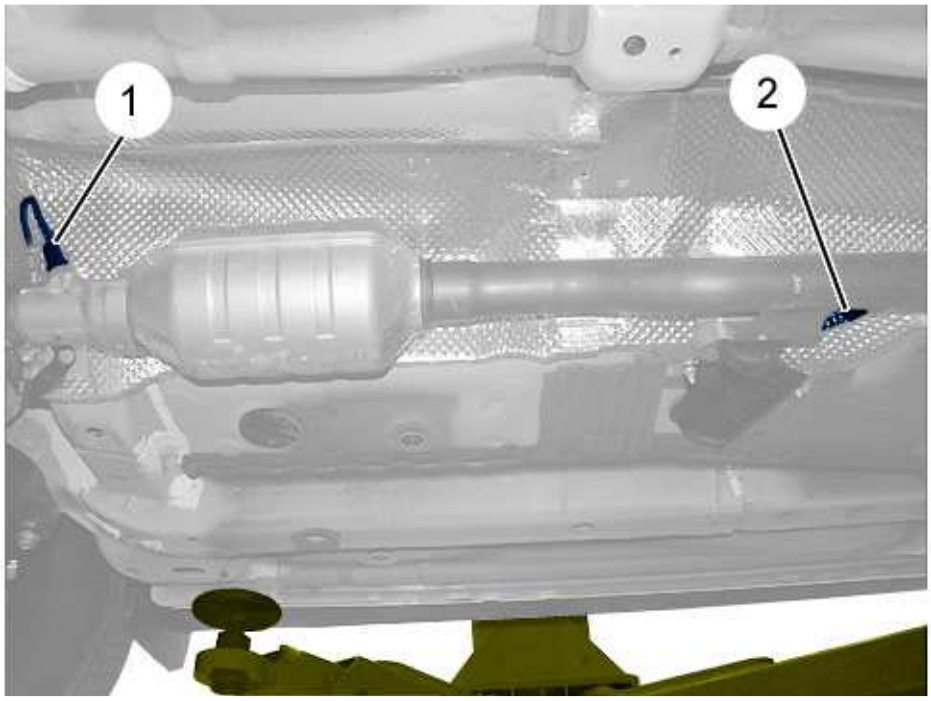

b1jg0pbd

(1) upstream oxygen sensor.

(2) Downstream oxygen sensor (according to engine).

3 - UPSTREAM OXYGEN SENSOR

3 - 1 - Removing (Through the interior of the vehicle)

> **ESSENTIAL :** Wait at least one hour before carrying out any work on the exhaust line

Disconnect the ancillaries battery.

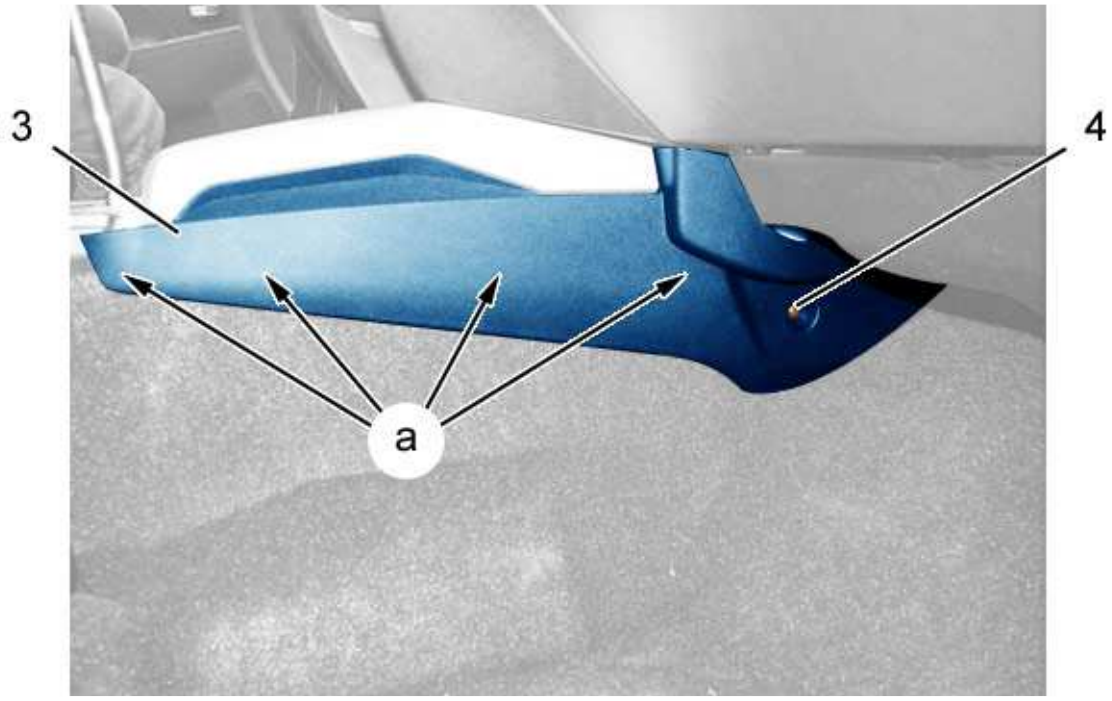

b1jg0pcd

Remove the bolt (4).

Unclip the centre console right-hand trim piece (3) (at "a") ; Using tool [1350-ZZ].

Remove the centre console right-hand trim piece (3).

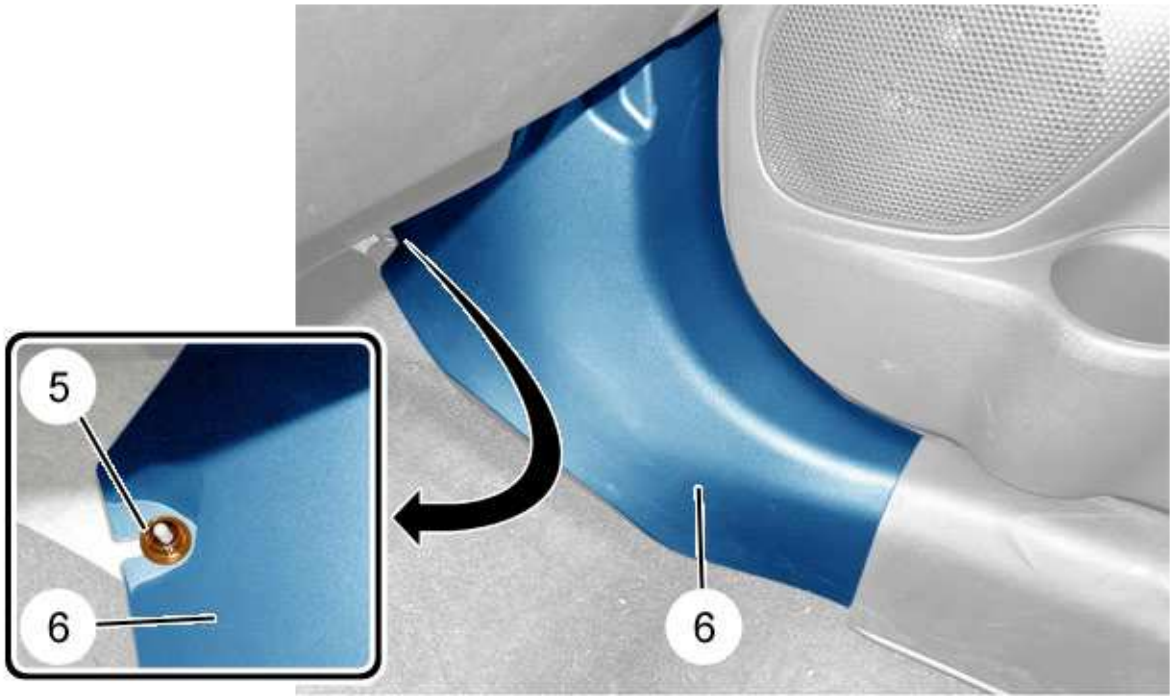

b1jg0pdd

Remove :

- The nut (5)
- The front pillar lower trim (6)

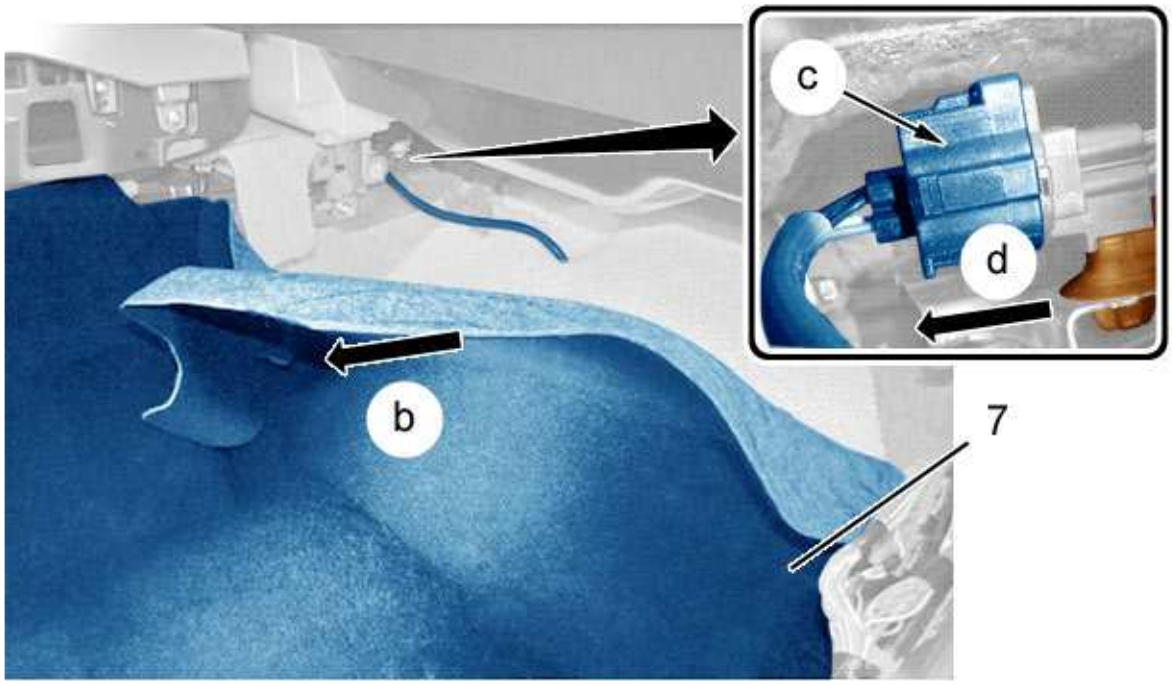

b1jg0ped

Lift the carpet (7) (At "b").

Unclip the connector from the support (At "d").

Disconnect the connector of the upstream oxygen sensor (1) (at "c").

3 - 2 - Removing (From below the vehicle)

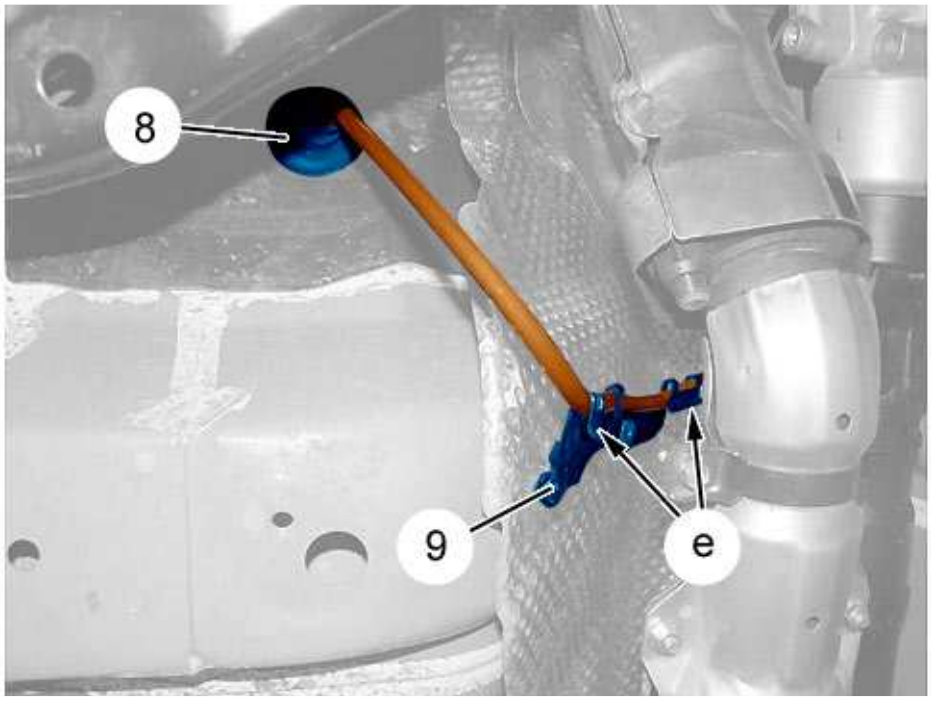

b1jg0pfd

Release and pull away :

- Sealing blanking piece (8) from grommet (downwards) (Downwards)
- The electrical harness and the connector of the upstream oxygen sensor (1) ((towards the outside of the vehicle))

Unclip the electrical harness of the upstream oxygen sensor (1) from the support (9) (at "e").

Remove the upstream oxygen sensor (1) ; Using tool [4386-T].

3 - 3 - Refitting (From below the vehicle)

> **WARNING :** Adhere to the tightening torques

> **WARNING :** Check the positioning of the grommet

Refit the upstream oxygen sensor (1) ; Using tool [4386-T].

Clip the electrical harness of the upstream oxygen sensor (1) on the support (9) (at "e").

Pass the electrical harness and the connector of the upstream oxygen sensor (1) through the grommet (Towards the inside of the vehicle).

Refit the sealing blanking piece (8) from the grommet .

3 - 4 - Refitting (Through the interior of the vehicle)

Connect the upstream oxygen sensor (1) connector (at "c").

Clip the connector on its support .

Refit :

- The front floor carpet (7)
- The front pillar lower trim (6)
- The nut (5)
- The right-hand trim of the centre console (3)
- The (4) bolt

4 - DOWNSTREAM OXYGEN SENSOR

4 - 1 - Removing (Through the interior of the vehicle)

> **ESSENTIAL :** Wait at least one hour before carrying out any work on the exhaust line

Disconnect the ancillaries battery.

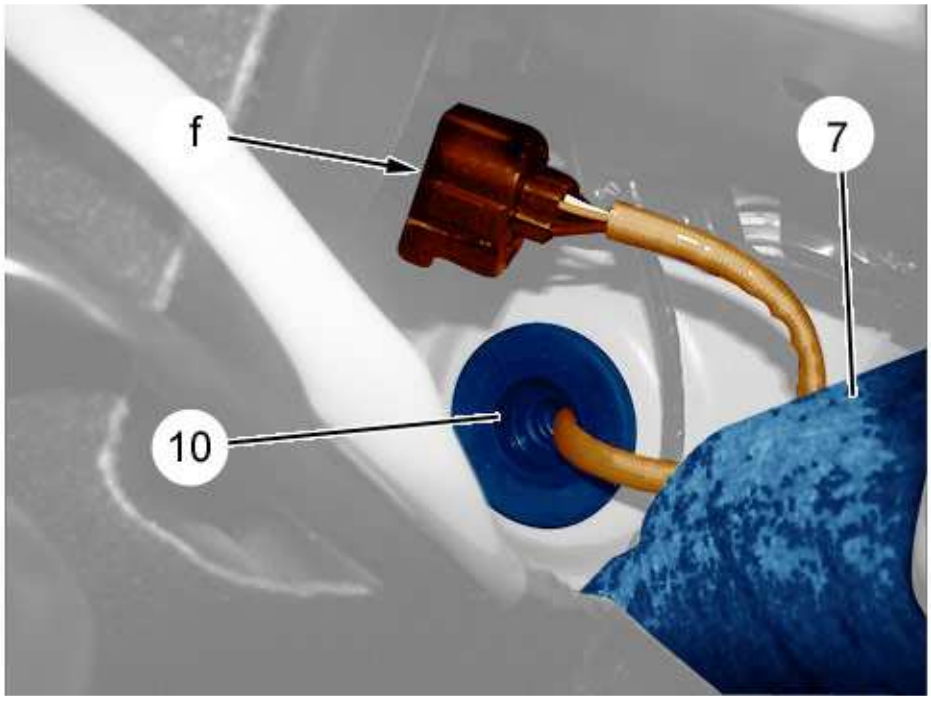

b1jg0pgd

Detach the front carpet (7) (under the passenger's seat).

Unclip and disconnect : The connector (at "f").

Release and pull away : Sealing blanking piece (10) from grommet (downwards) (Downwards).

4 - 2 - Removing (From outside the vehicle)

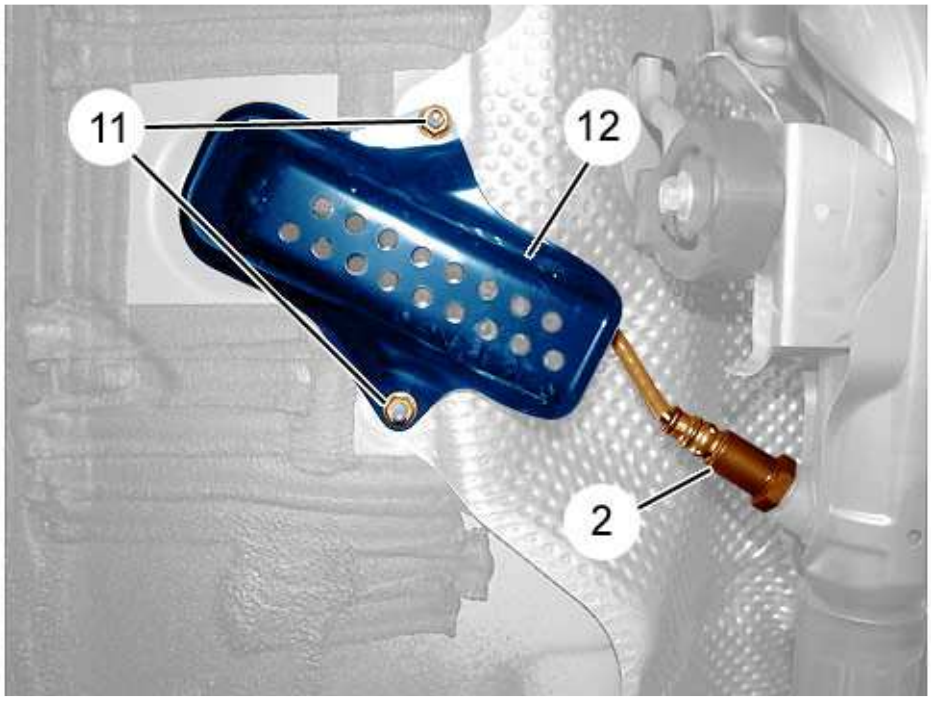

b1jg0phd

Remove :

- The nuts (11)
- The protector (12)
- The downstream oxygen sensor (2) ; Using tool [4386-T]

4 - 3 - Refitting (From outside the vehicle)

WARNING : Adhere to the tightening torques

WARNING : Check the positioning of the grommet

Pass the electrical wiring harness and connector for downstream oxygen sensor (2) through grommet (Towards the inside of the vehicle).

Refit :

- The sealing closer (10)
- The downstream oxygen sensor (2) ; Using tool [4386-T]
- The protector (12)
- The nuts (11)

4 - 4 - Refitting (Through the interior of the vehicle)

Connect and clip : The connector (at "f").

Refit : The front floor carpet (7).

5 - ADDITIONAL OPERATIONS

> **WARNING :** Perform the operations that are required following a reconnection of the ancillaries battery

Reconnect the ancillaries battery.

Delete the fault codes.

TIGHTENING TORQUES : EXHAUST SYSTEM

1 - PRESENTATION

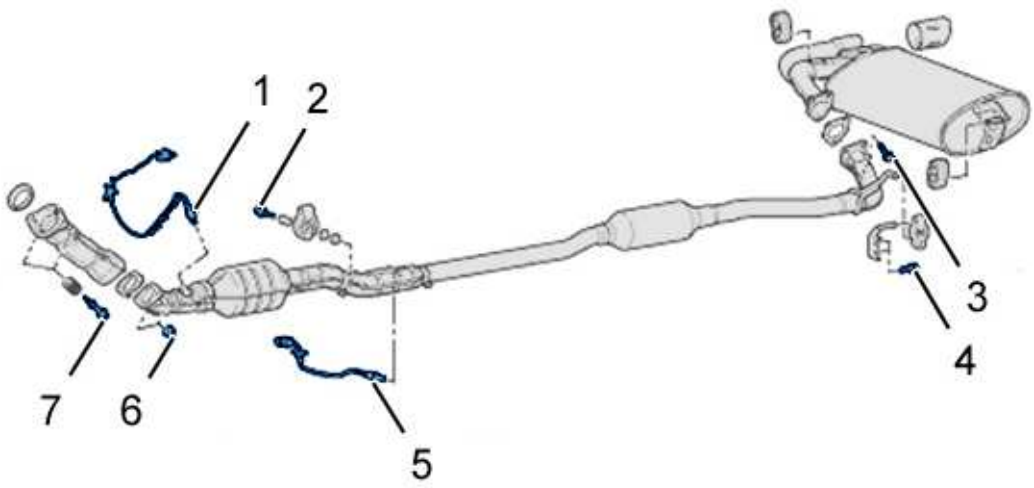

b1jb0f3d

2 - TIGHTENING TORQUES

Reference	Designation	Tightening torque
(1)	Upstream oxygen sensor	5 daNm
(2)	bolts (Exhaust hanger)	1 daNm
(3)	bolts (Rear silencer fixing)	4 daNm
(4)	bolts (Exhaust hanger)	1 daNm
(5)	Downstream oxygen sensor	5 daNm
(6)	fixing nuts (Intermediate pipe / Catalytic converter)	6 daNm
(7)	bolts (Downpipe fixing)	4 daNm

DISMANTLING - RE-ASSEMBLY : CATALYTIC CONVERTER

ESSENTIAL : Observe the safety and cleanliness recommendations

1 - TOOLING

tool	Reference	Designation
[4386-T] 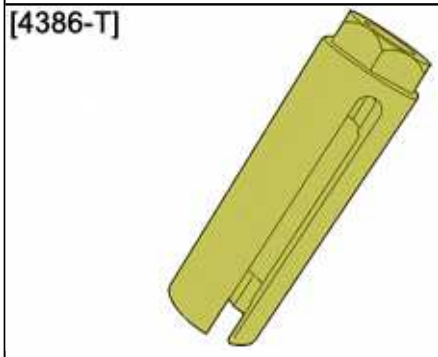 *e5ag07ct*	[4386-T]	slit socket 22 mm

2 - REMOVING

ESSENTIAL : Wait at least one hour before carrying out any work on the exhaust line

Disconnect the battery.

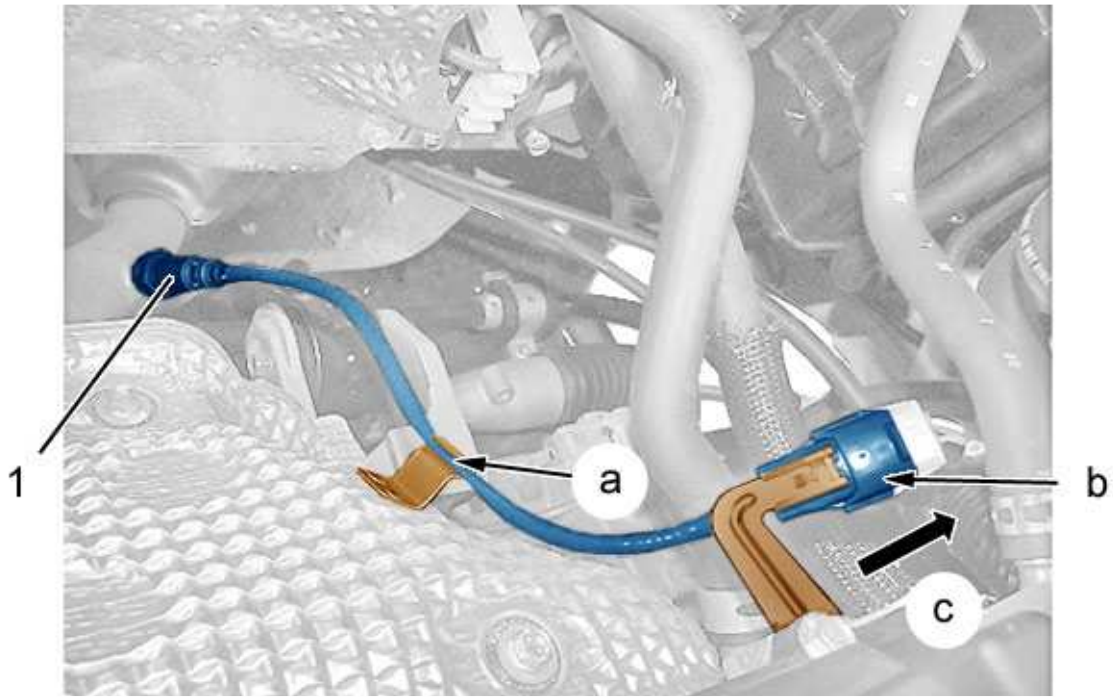

b1jg0nvd

Unclip the connector from the support (At "c").

Disconnect connector of the upstream oxygen sensor (as "b").

Detach the harness of the upstream oxygen sensor (1) (as "a").

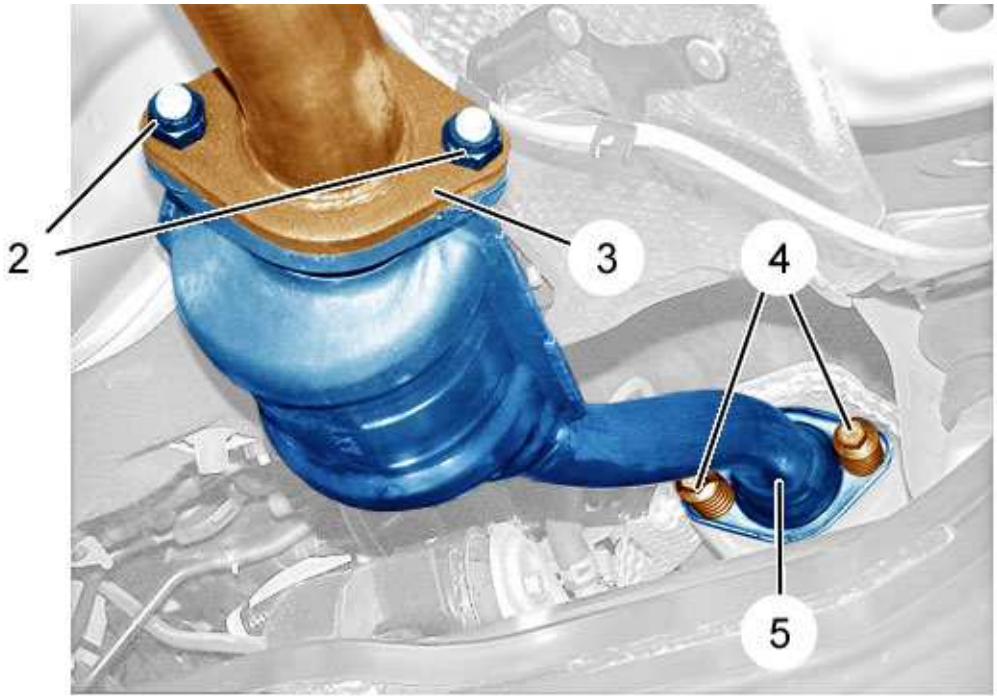

b1jg0odd

Remove the 2 nuts (2) fixing the exhaust line (3) on the catalytic converter (5).

Remove the 2 bolts (4) complete with their springs.

Move the catalytic converter (5) away from the exhaust manifold (Towards the rear of the vehicle).

Detach the catalytic converter (5) from the exhaust manifold (Towards the left and then towards the front of the vehicle).

Remove catalytic converter (5).

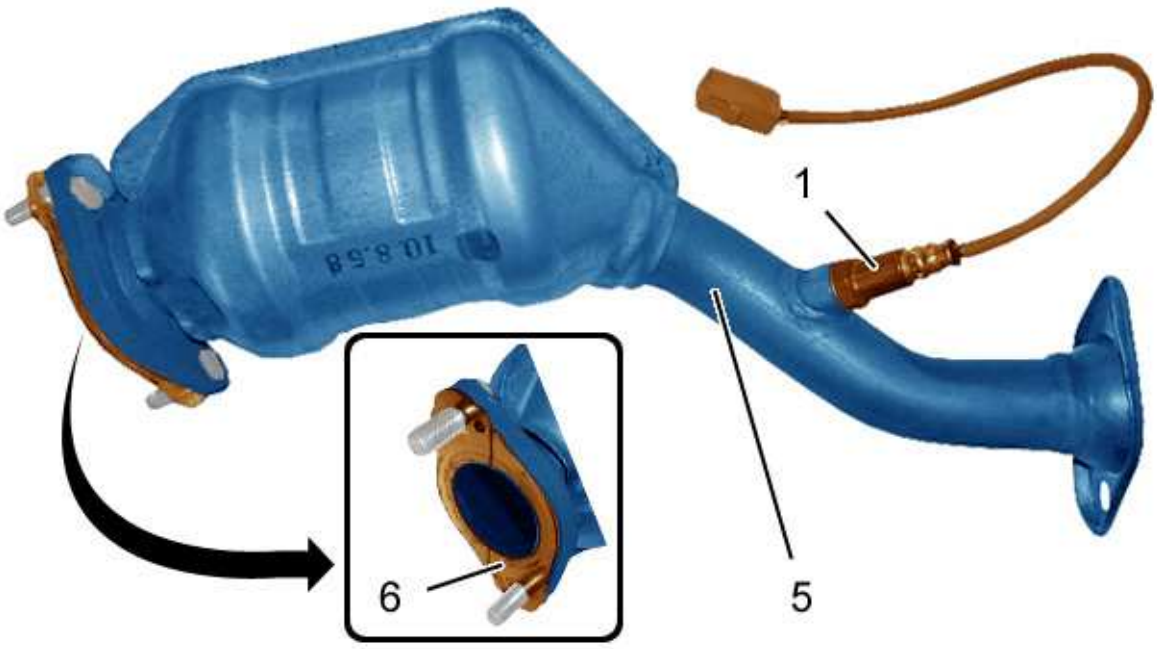

b1jg0oed

Remove the seal (6) from the catalytic converter (5).

Remove the upstream oxygen sensor (1) ; Using tool [4386-T].

3 - REFITTING

WARNING : Adhere to the tightening torques

WARNING : Systematically replace the exhaust manifold seal

WARNING : Always replace the catalytic converter (5) seal (6)



b1jg0ofd

Refit :

- The exhaust manifold (8) outlet seal (7) (new seal)
- The upstream oxygen sensor (1) ; Using tool [4386-T]
- The seal (6) of the catalytic converter (5) (new seal)
- The catalytic converter (5)
- The 2 bolts (4) together with their springs
- The 2 nuts (2) fixing the exhaust line (3) on the catalytic converter (5)

Connect the upstream oxygen sensor connector(as "b").

Clip the connector on its support .

Attach the harness of the upstream oxygen sensor (as "a").

> **WARNING :** Perform the operations to be carried out following reconnection of the battery

Reconnect the battery.

Delete the fault codes.

TIGHTENING TORQUES : 4A92 ENGINE TYPE

1 - CYLINDER HEAD

1 - 1 - Tightening torques

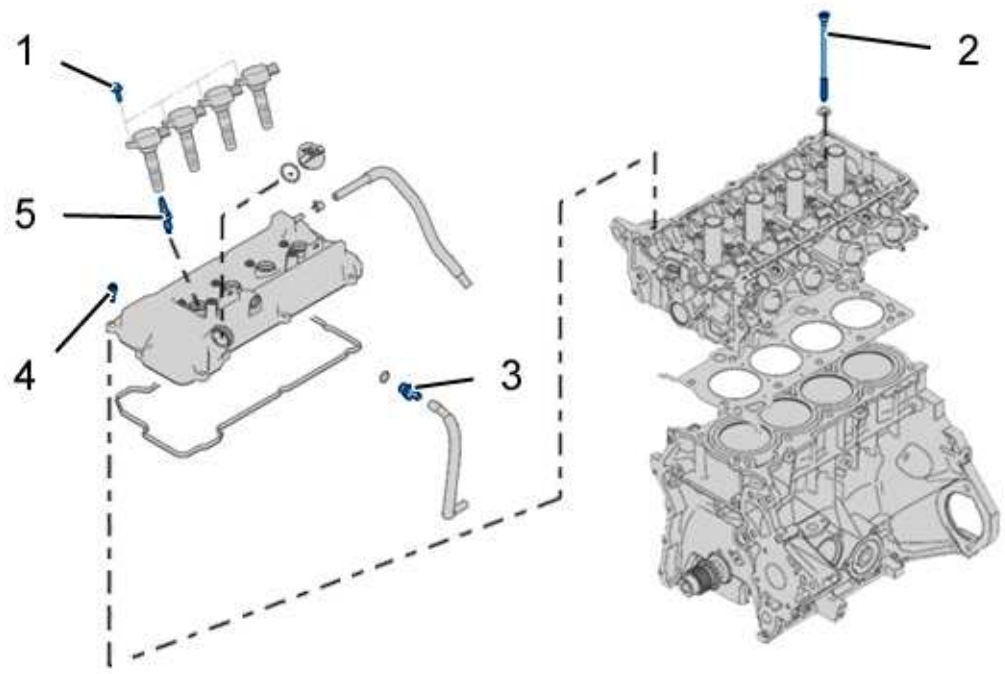

b1bb1idd

Referen	Designation	Stage	Tightening torque
(1)	bolts (Ignition coil)	Tightening	0,95 daNm
(2)	bolts (Cylinder head) (*) (**)	Pre-tighten	2,5 daNm
		Angular tightening	182°
(3)	Oil vapours recycling union	Tightening	0,25 daNm
(4)	bolts (Cylinder head cover) (*)	Pre-tighten	0,3 daNm
		Tightening	0,55 daNm
(5)	Spark plugs	Tightening	2,5 daNm
(*) Follow the tightening sequence			
(**) Always to be replaced whenever removed			

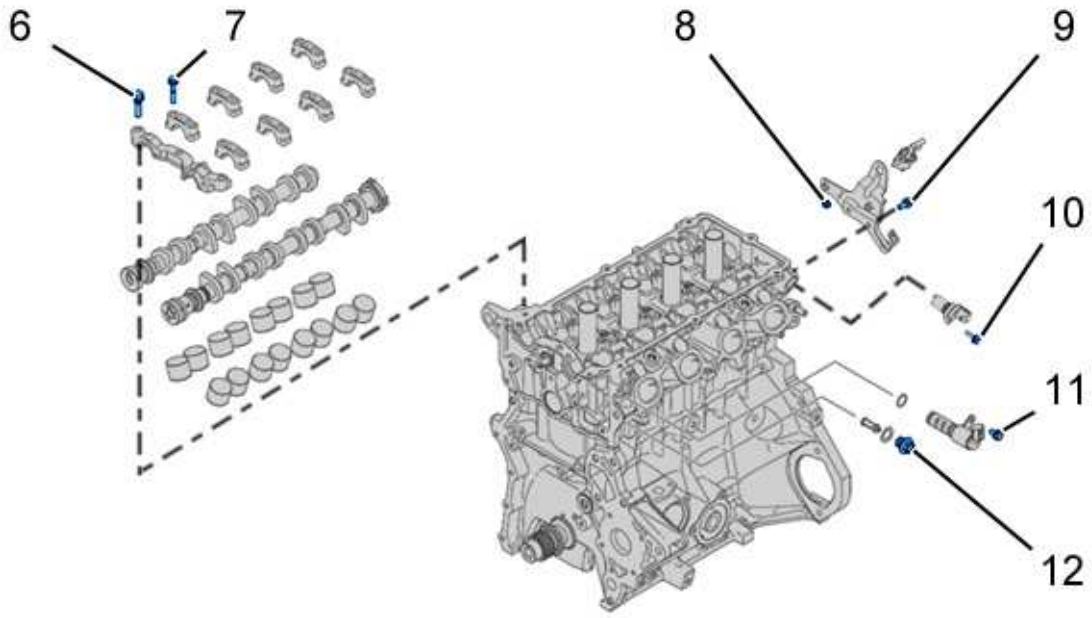

b1bb1ied

Referen	Designation	Stage	Tightening torque
(6)	bolts (Double camshaft bearing cap) (*)	Pre-tighten	0,5 daNm
		Tightening	1,1 daNm
		Tightening	2 daNm
(7)	bolts (Camshaft bearing caps) (*)	Pre-tighten	0,5 daNm
		Tightening	1.1 daNm
(8)	Nut (Canister)	Tightening	0,76 daNm
(9)	bolts (Engine sling hook)	Tightening	2,6 daNm
(10)	bolts (Camshaft position sensor)	Tightening	1 daNm
(11)	bolts (Variable lift solenoid valve)	Tightening	1 daNm
(12)	Plug	Tightening	4,4 daNm
(*) Follow the tightening sequence			

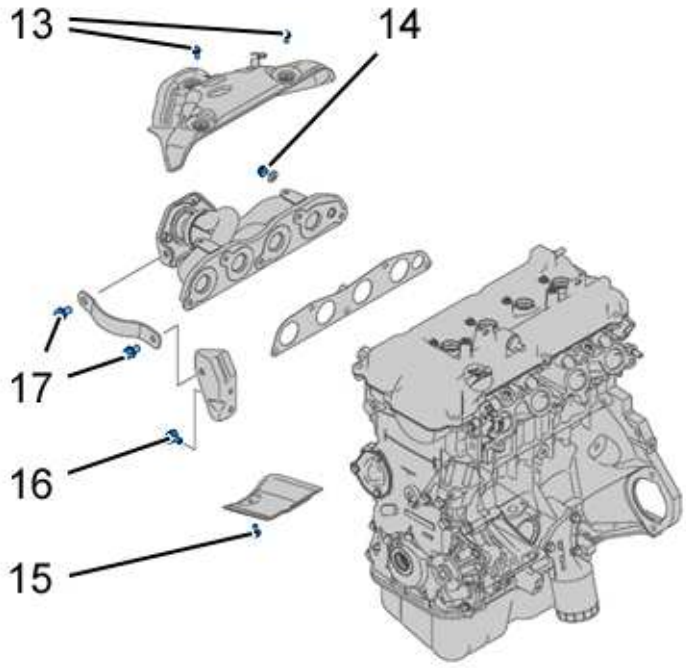

b1bb1ifd

Referen	Designation	Stage	Tightening torque
(13)	bolts (Exhaust manifold upper heat shield)	Tightening	0,95 daNm
(14)	Nut (Exhaust manifold) (*)	Tightening	3,4 daNm
(15)	bolts (Exhaust manifold lower heat shield)	Tightening	0,95 daNm
(16)	bolts (Exhaust manifold support) (*)	Tightening	2,3 daNm
(17)	bolts (Exhaust manifold support) (*)	Tightening	3,6 daNm
(*) Follow the tightening sequence			

1 - 2 - Order of tightening of the cylinder head bolts (2)

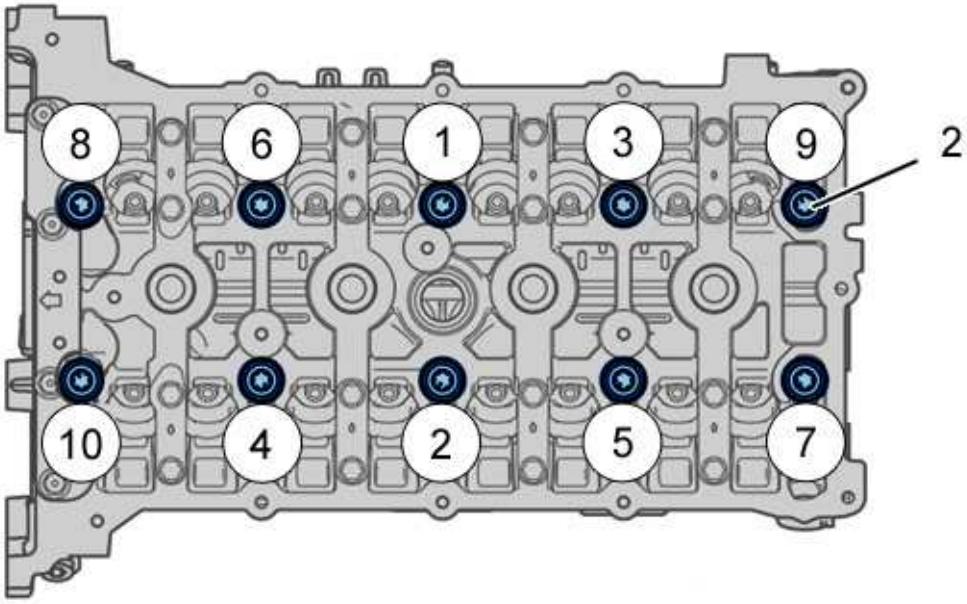

b1db032d

WARNING : Follow the tightening sequence

Tightening procedure :

- Pre-tightening of the 10 bolts (2) to 2,5 m.daN (from 1 to 10)
- Angular tightening of the 10 bolts (2) to 182° (from 1 to 10)

1 - 3 - Order of tightening : Cylinder head cover bolts (4)

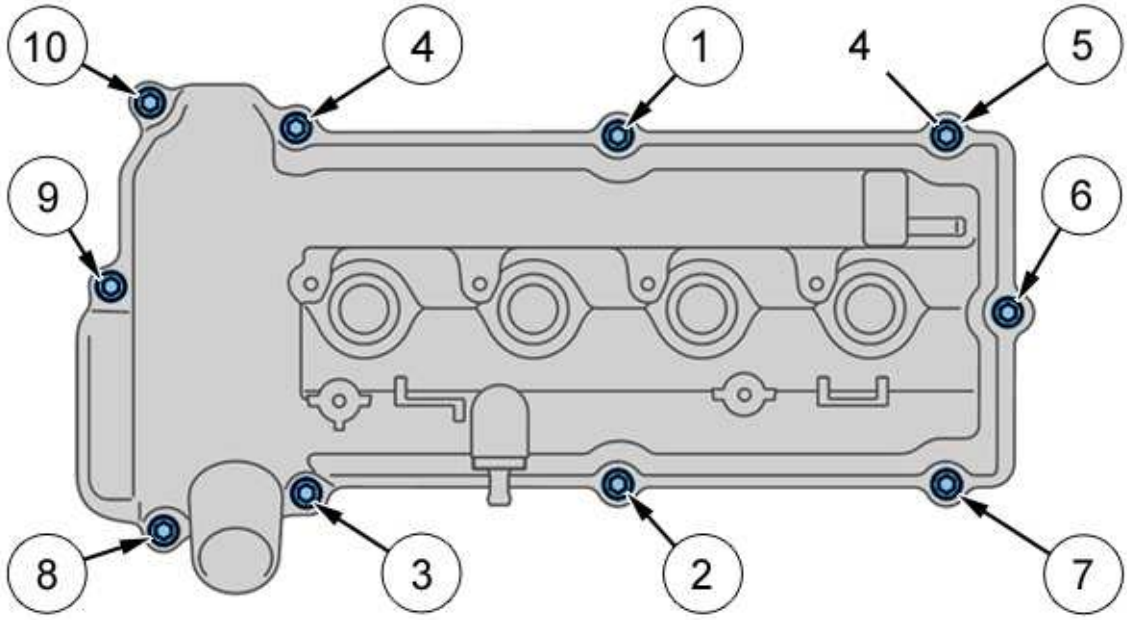

b1db033d

WARNING : Follow the tightening sequence

Tightening procedure :

- Pre-tightening of the 10 bolts (4) to 0,3 m.daN (from 1 to 10)
- Tightening of the 10 bolts (2) to 0,55 m.daN (from 1 to 10)

1 - 4 - Order of tightening : Double camshaft bearing cap bolts (6)

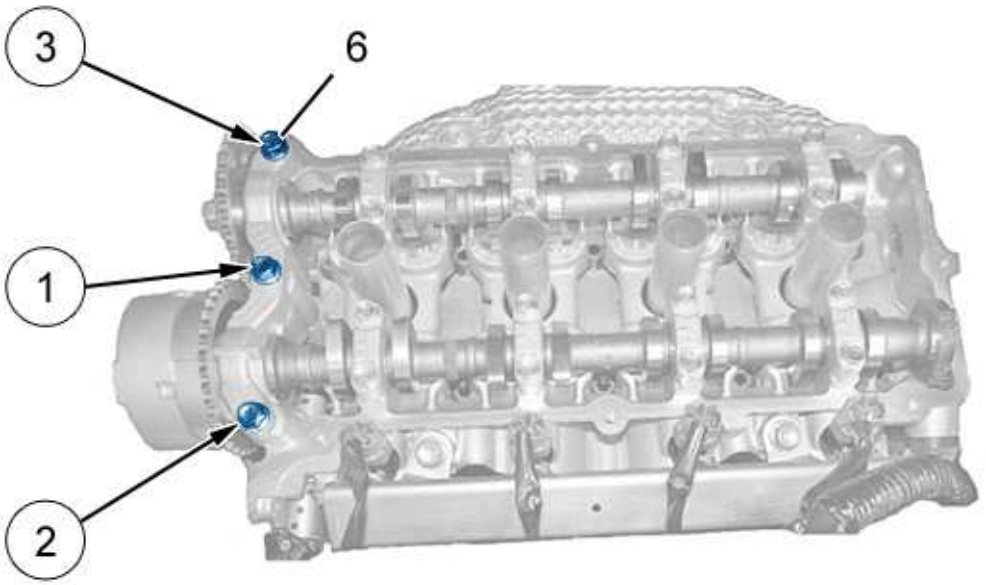

b1bb1iid

WARNING : Follow the tightening sequence

Tightening procedure :

- Pre-tightening of the 3 bolts (6) to 0,5 m.daN (from 1 to 3)
- Tightening of the 3 bolts (6) to 1,1 m.daN (from 1 to 3)
- Tightening of the 3 bolts (6) to 2 m.daN (from 1 to 3)

1 - 5 - Order of tightening : Camshaft bearing caps bolts (7)

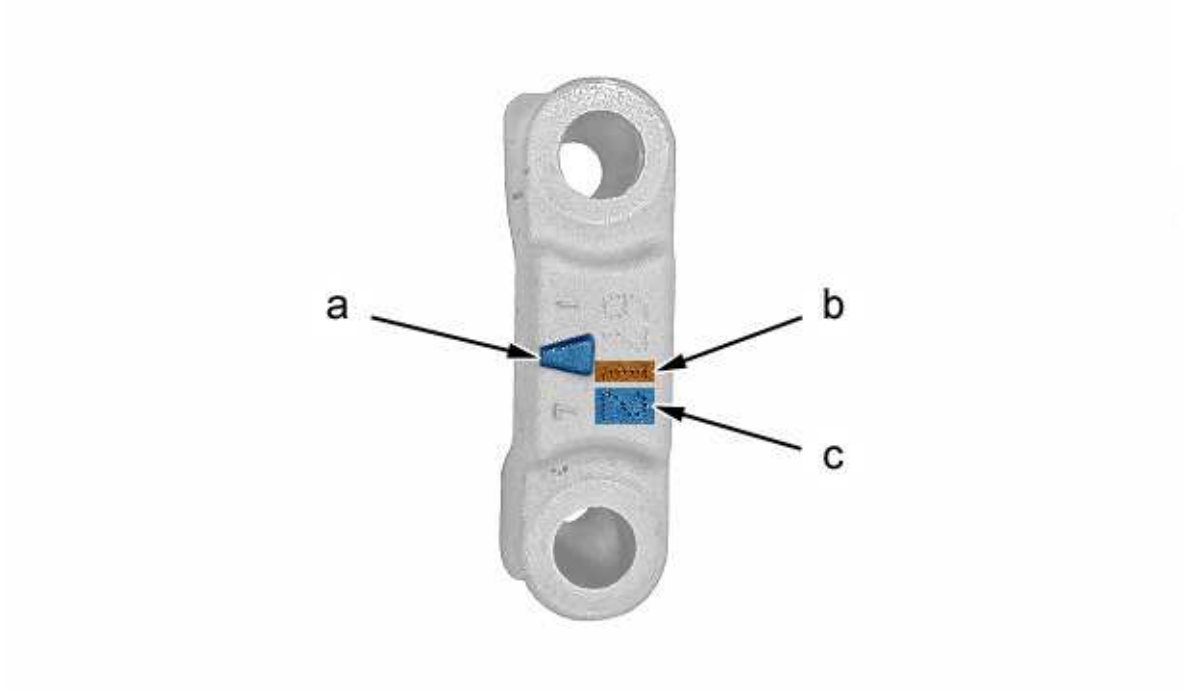

b1bb1o6d

Camshaft bearing caps.

"a" Orientation of the bearing caps (Timing chain side).

"b" Identification of the bearing caps.

"c" Fitting position of the main bearing caps .

> **WARNING :** The camshaft bearing caps are marked (at "a") for the orientation (at "c") for the position, and (at "b") for identification of the bearing -"E" for the exhaust -"I" for the inlet

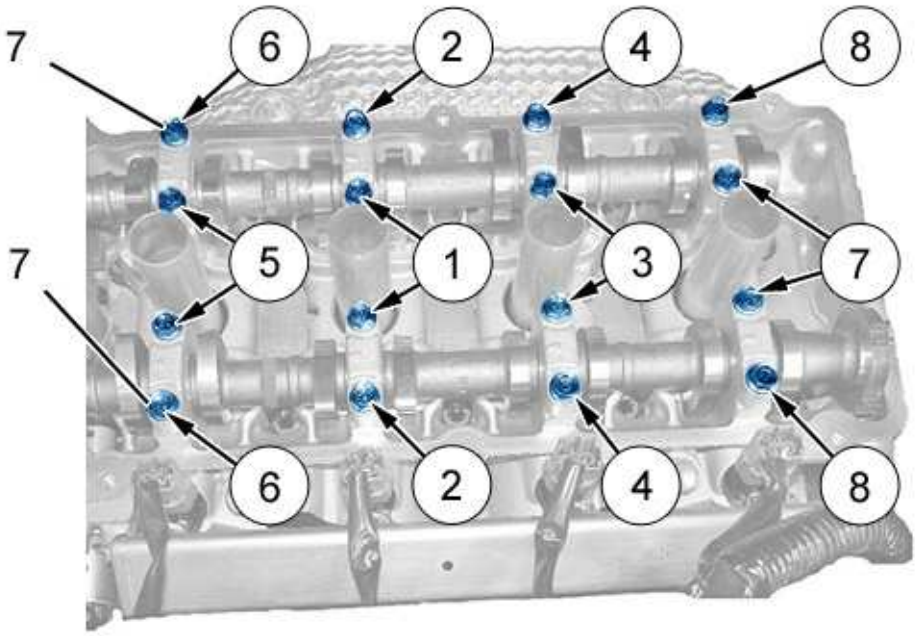

b1bb1ikd

WARNING : Follow the tightening sequence

Tightening procedure :

- Pre-tightening of the 8 bolts (7) to 0,5 m.daN (from 1 to 8)
- Tightening of the 8 bolts (7) to 1,1 m.daN (from 1 to 8)

1 - 6 - Order of tightening : Exhaust manifold mounting nuts (14)

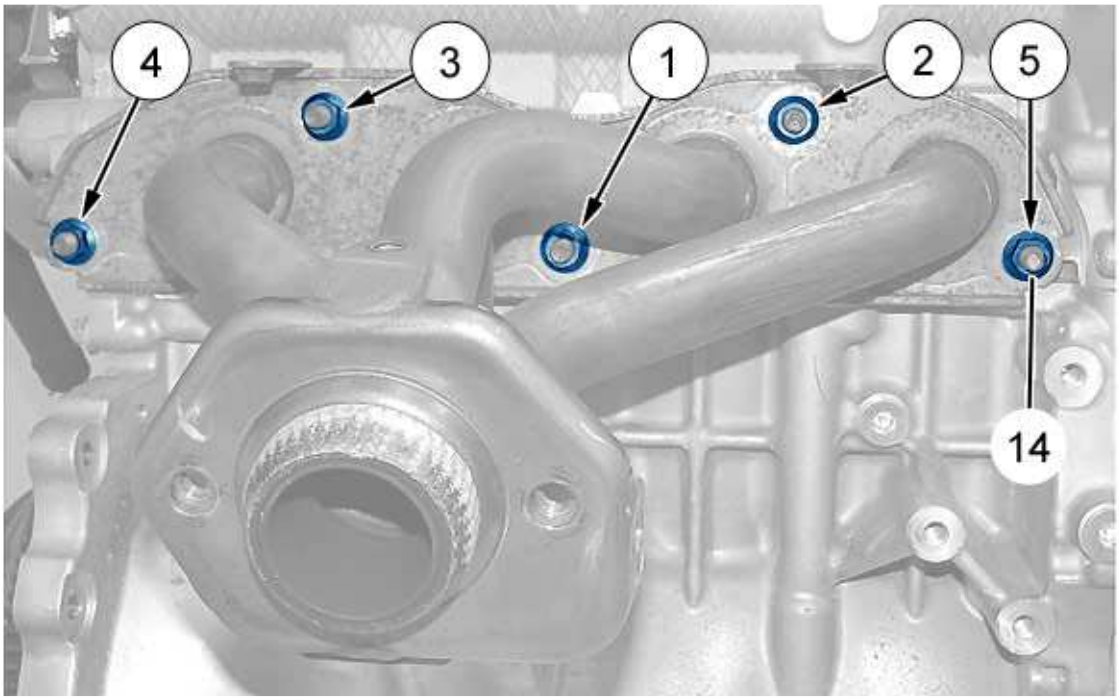

b1jb0f5d

WARNING : Follow the tightening sequence

Tightening of the 5 bolts (14) to 3,4 m.daN (from 1 to 5).

1 - 7 - Order of tightening of the exhaust manifold support bolts (16), (17)

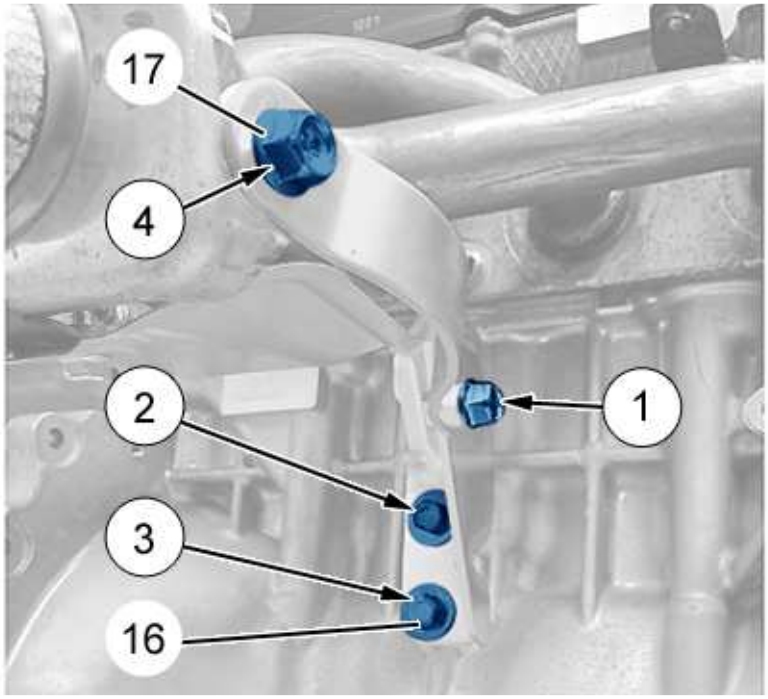

b1jb0f6d

WARNING : Follow the tightening sequence

Tightening procedure :

- Tightening of the bolt (17) to 3,6 daN.m (De 1)
- Tightening of the 2 bolts (16) to 2,3 m.daN (from 2 to 3)
- Tightening of the bolt (17) to 3,6 daN.m (De 4)

2 - CYLINDER BLOCK

2 - 1 - Tightening torques

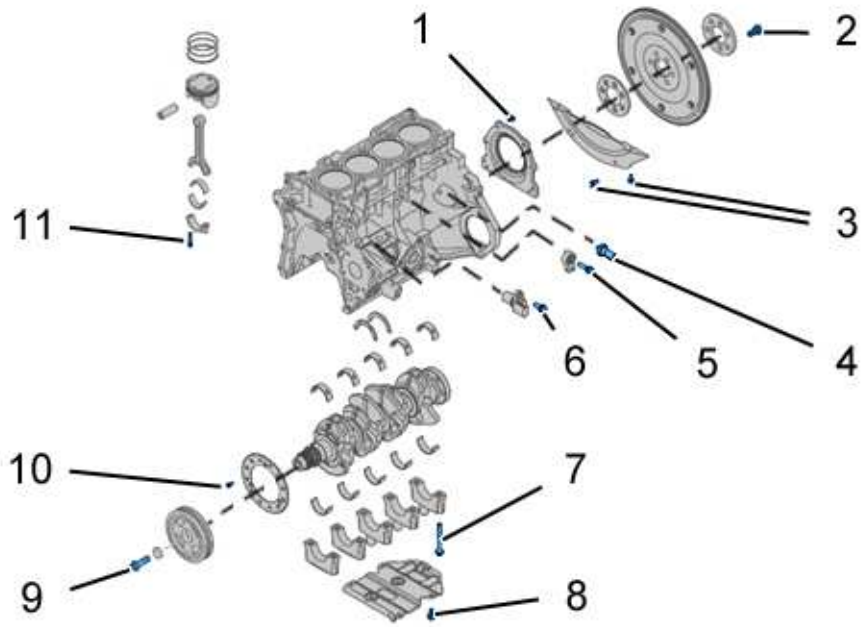

b1bb1ind

Referen	Designation	Stage	Tightening torque
(1)	bolts : Closing plate (Gearbox end) (*)	Tightening	1,1 daNm
(2)	bolts (Engine flywheel) (*)	Pre-tighten	5 daNm
		Tightening	10 daNm
(3)	bolts (Protection shield)	Tightening	1,1 daNm
(4)	Oil pressure sensor	Tightening	1 daNm
(5)	bolts (Knock detector)	Tightening	2 daNm
(6)	bolts (Engine speed sensor)	Tightening	0,95 daNm
(7)	bolts (Crankshaft main bearing caps) (*) (**)	Tightening	3,5 daNm
		Angular tightening	60°

(8)	Cylinder block stiffener bolts) (*)	Tightening	2,6 daNm
(9)	bolts (Accessories drive pulley)	Tightening	5 daNm
		Angular tightening	60°
(10)	Engine speed sensor target bolt (*)	Tightening	1 daNm
(11)	bolts (Conrods) (**)	Tightening	1,47 daNm
		Angular tightening	90°
(*) Follow the tightening sequence			
(**) Always to be replaced whenever removed			

2 - 2 - Order of tightening : Closing plate fixing screws (Gearbox end) (1)



b1bb1iod

WARNING : Follow the tightening sequence

Tightening of the 6 bolts (1) to 1,1 m.daN (from 1 to 6).

2 - 3 - Order of tightening : Engine flywheel bolt (2)

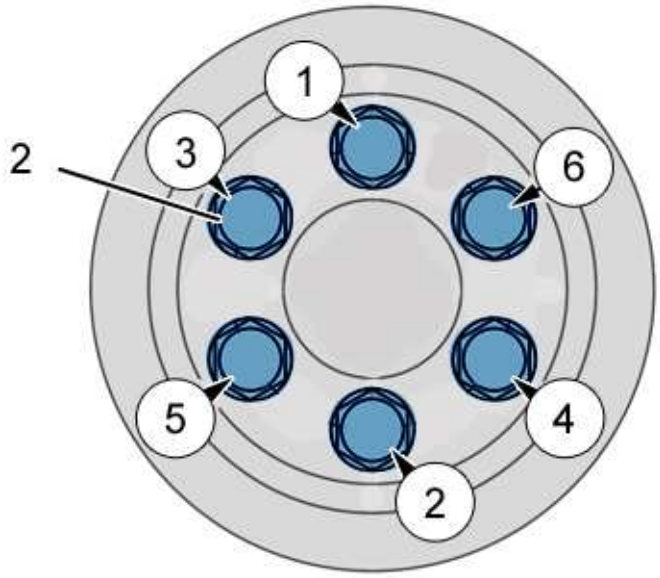

b1bb1ipd

WARNING : Follow the tightening sequence

Tightening procedure :

- Pre-tightening of the 6 bolts (2) to 5 m.daN (from 1 to 6)
- Tightening of the 6 bolts (2) to 10 m.daN (from 1 to 6)

2 - 4 - Order of tightening : Crankshaft bearing cap bolts (7)

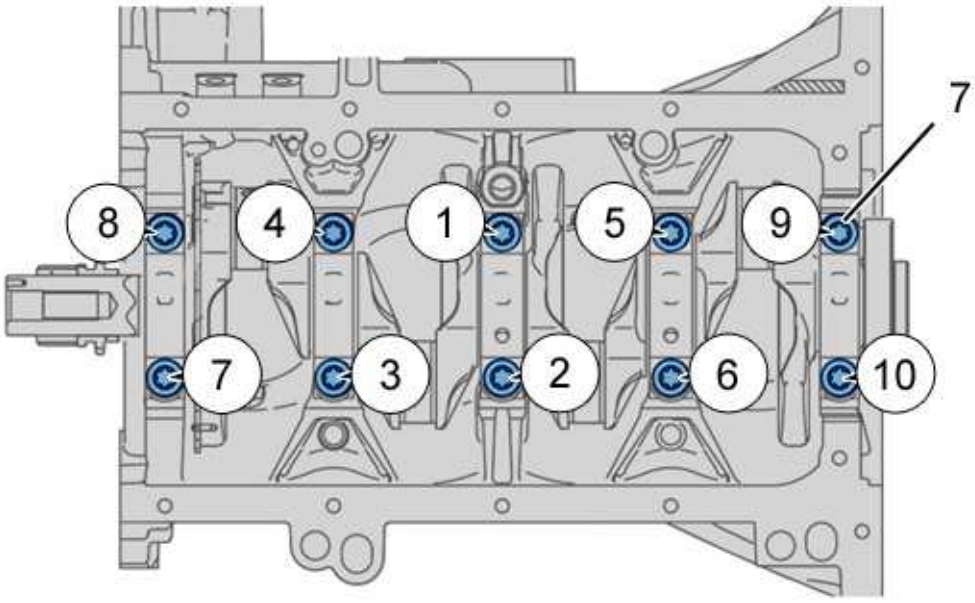

b1bb1iqd

WARNING : Follow the tightening sequence

Tightening procedure :

- Pre-tightening of the 10 bolts (7) to 3,5 m.daN (from 1 to 10)
- Angular tightening of the 10 bolts (7) to 60° (from 1 to 10)

2 - 5 - Order of tightening : Cylinder block stiffener bolts (8)

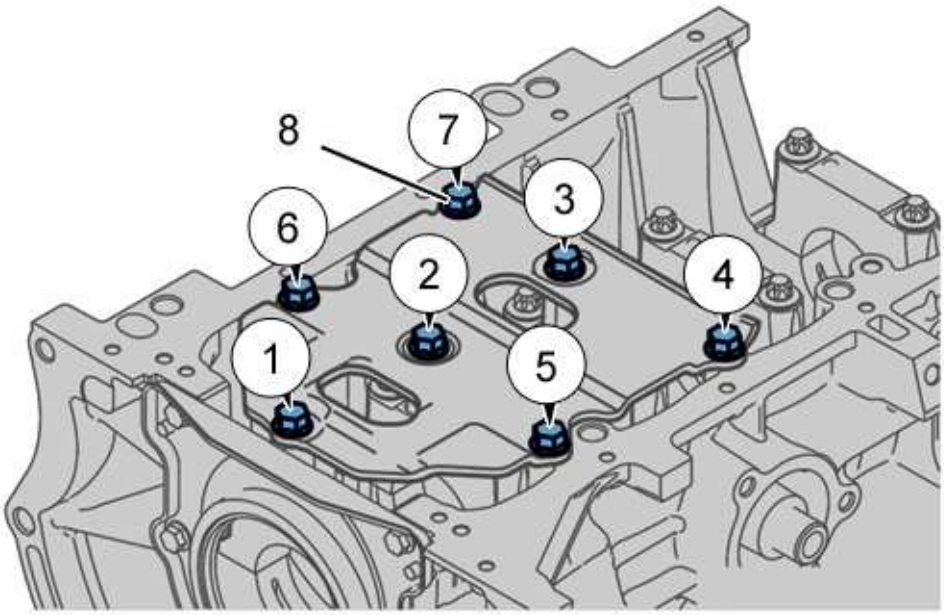

b1bb1ird

WARNING : Follow the tightening sequence

Tightening of the 7 bolts (8) to 2,6 m.daN (from 1 to 7).

2 - 6 - Order of tightening : Engine speed sensor target bolt (10)

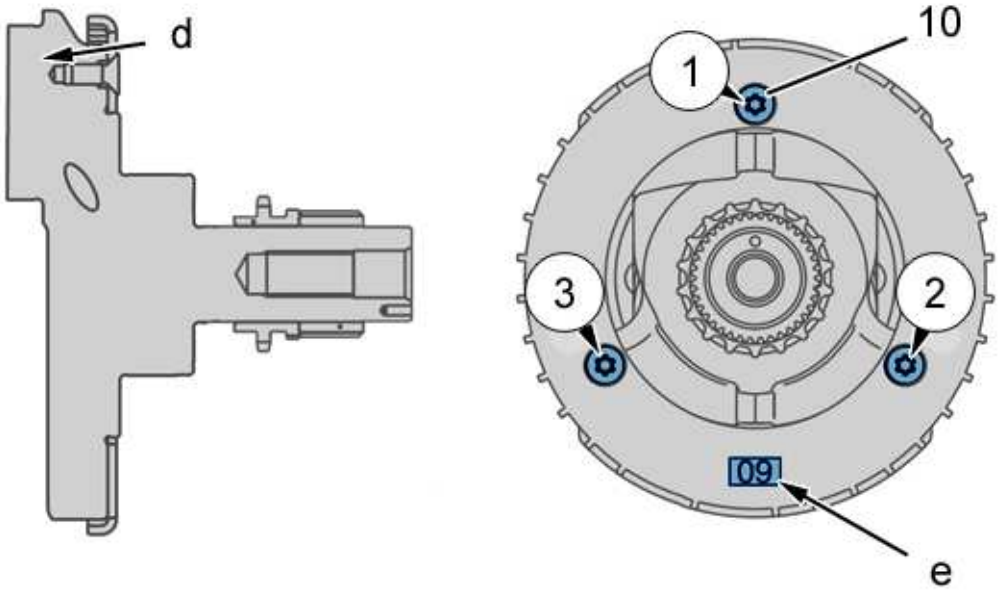

b1bb1isd

WARNING : Place the crank pin of cylinder n°1 at top dead centre (as shown in the diagram above) (at "d")

WARNING : The mark on the target must be visible (as shown in the diagram above) (at "e")

WARNING : Follow the tightening sequence

Tightening of the 3 bolts (10) to 1 m.daN (from 1 to 3).

3 - LUBRICATION

3 - 1 - Tightening torques

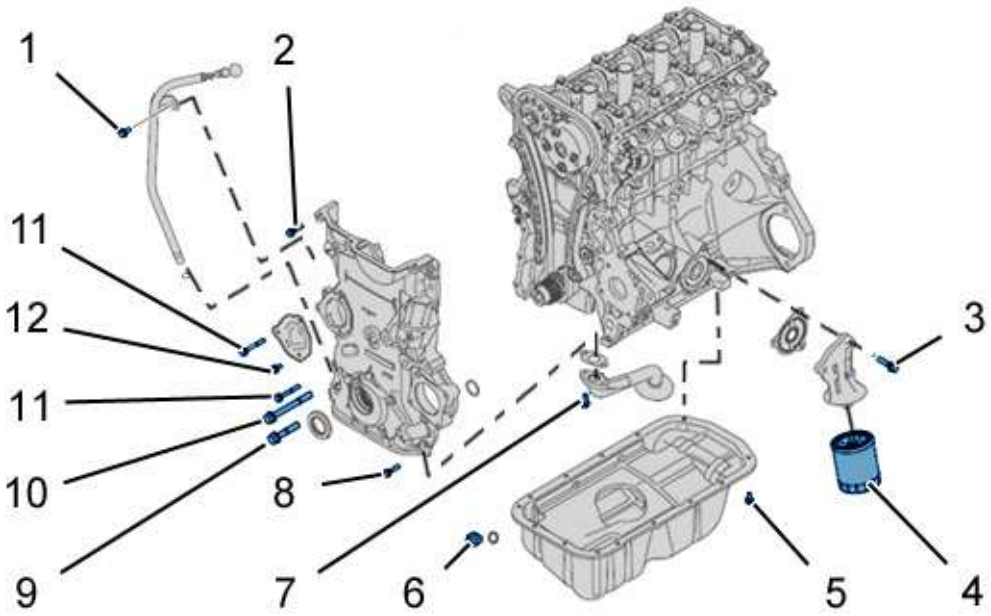

b1bb1itd

Referenc	Designation	Stage	Tightening torque
(1)	bolts (Dipstick guide tube)	Tightening	1,1 daNm
(2)	bolts (Timing cover) (*)	Tightening	0,95 daNm
(3)	bolts (Oil filter support)	Tightening	2,3 daNm
(4)	Oil filter	Tightening	1.4 daNm
(5)	bolts (Sump) (*)	Tightening	1,1 daNm
(6)	Drain cap	Tightening	4 daNm
(7)	bolts (Oil suction strainer)	Tightening	1,8 daNm
(8)	bolts (Timing cover) (*)	Tightening	0,95 daNm
(9)	bolts (Timing cover) (*)	Pre-tighten	0,95 daNm
		Tightening	4,2 daNm

(10)	bolts (Timing cover) (*)	Pre-tighten	0,95 daNm
		Tightening	4,2 daNm
(11)	bolts (Timing cover) (*)	Tightening	0,95 daNm
(12)	bolts (Hydraulic tensioner cover)	Tightening	0,95 daNm
(*) Follow the tightening sequence			

3 - 2 - Order of tightening : Fixing bolts (5) of the oil sump

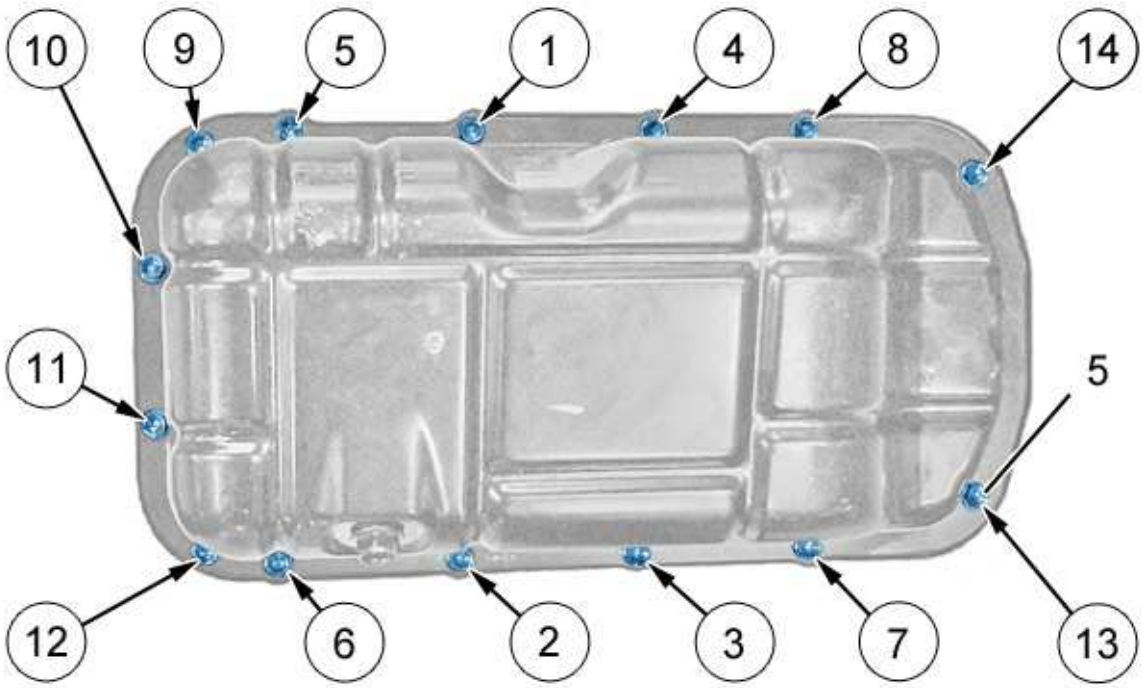

b1fb02od

WARNING : Follow the tightening sequence

Tightening of the 14 bolts (5) to 1,1 m.daN (from 1 to 14).

3 - 3 - Order of tightening : Timing cover bolt (2), (8), (9), (10), (11)

(2) Timing cover fixing bolt (bolts M6x25).

(8) Timing cover fixing bolt (Bolt M6x30).

(9) Timing cover fixing bolt (Bolt M10x50).

(10) Timing cover fixing bolt (Bolt M10x90).

(11) Timing cover fixing bolt (bolts M6x45).

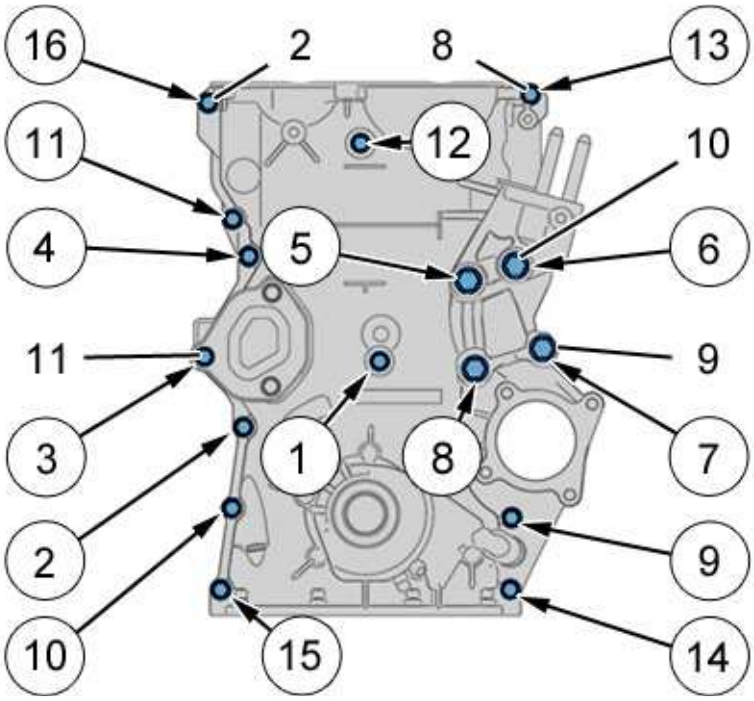

b1eb02ad

WARNING : Follow the tightening sequence

Tightening procedure :

- Tightening of the bolt (11) to 0,95 daN.m (De 1)
- Tightening of the bolt (2) to 0,95 daN.m (De 2)
- Tightening of the bolt (11) to 0,95 daN.m (De 3)
- Tightening of the bolt (8) to 0,95 daN.m (De 4)
- Pre-tightening of the 2 bolts (10) to 0,95 m.daN (from 5 to 6)
- Pre-tightening of the 2 bolts (9) to 0,95 m.daN (from 7 to 8)
- Tightening of the 4 bolts (2) to 0,95 m.daN (from 9 to 12)
- Tightening of the 2 bolts (8) to 0,95 m.daN (from 13 to 14)
- Tightening of the 2 bolts (2) to 0,95 m.daN (from 15 to 16)
- Tightening of the 2 bolts (10) to 4,2 m.daN (from 5 to 6)
- Tightening of the 2 bolts (9) to 4,2 m.daN (from 7 to 8)

4 - TIMING GEAR

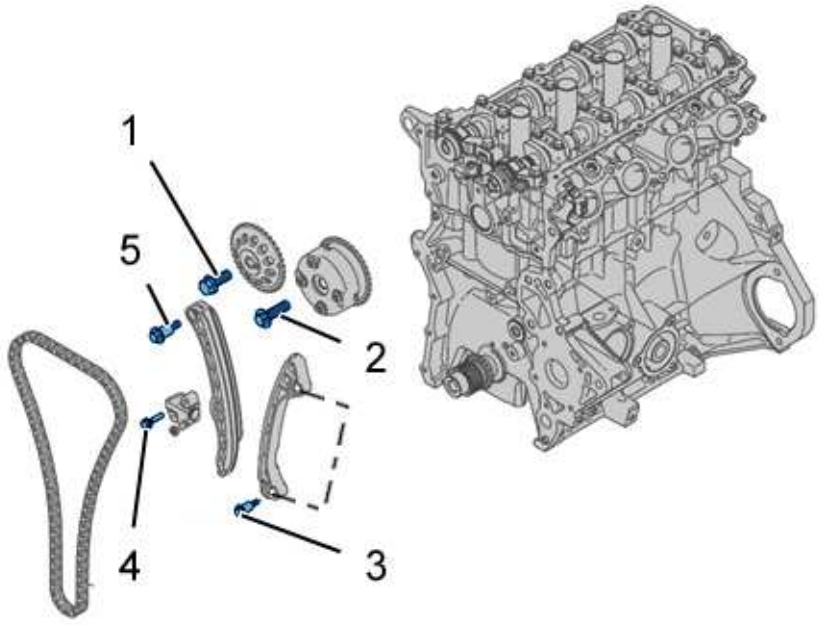

b1eb02cd

Referenc	Designation	Stage	Tightening torque
(1)	bolts (Exhaust camshaft pulley)	Tightening	9,2 daNm
(2)	bolts (Induction camshaft pulley)	Tightening	6,5 daNm
(3)	bolts (Fixed plate)	Tightening	0,95 daNm
(4)	bolts (Hydraulic tensioner)	Tightening	0,95 daNm
(5)	bolts (Tensioner pad)	Tightening	2,3 daNm

5 - ENGINE AIR SUPPLY CIRCUIT

5 - 1 - Tightening torques

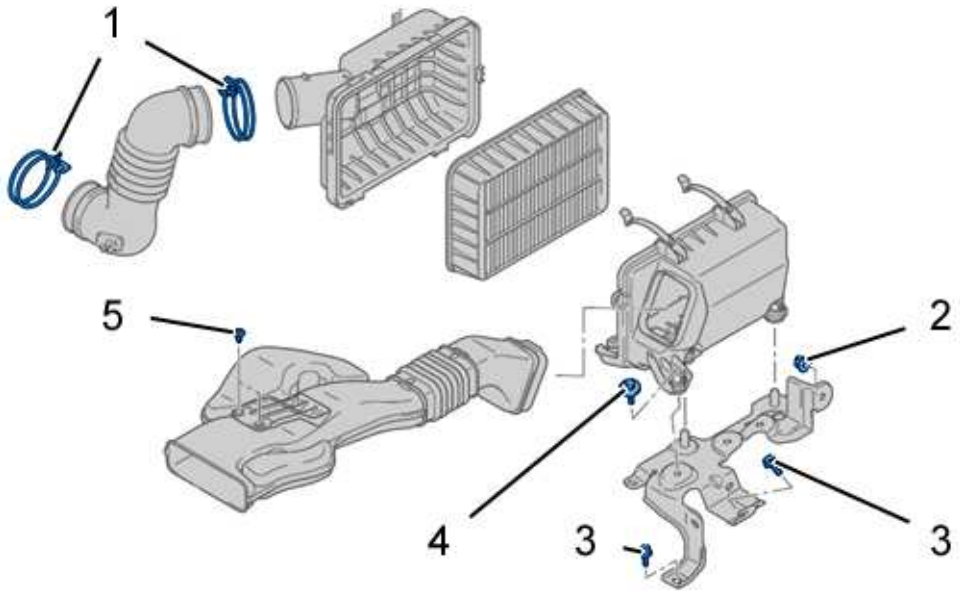

b1hb126d

Referenc	Designation	Stage	Tightening torque
(1)	Clip (Air inlet pipes)	Tightening	0,4 daNm
(2)	Nut (Air filter unit mounting)	Tightening	1,1 daNm
(3)	bolts (Air filter unit mounting)	Tightening	0,95 daNm
(4)	bolts (Air filter unit)	Tightening	0,1 daNm
(5)	Clip	Tightening	-

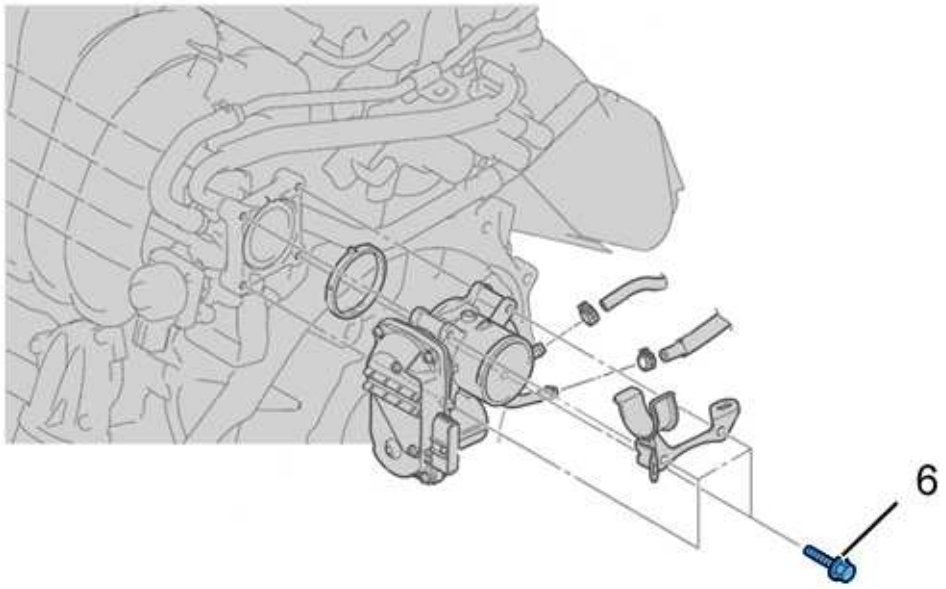

b1hb127d

Referenc	Designation	Stage	Tightening torque
(6)	bolts (Motorised throttle unit)	Tightening	0,95 daNm

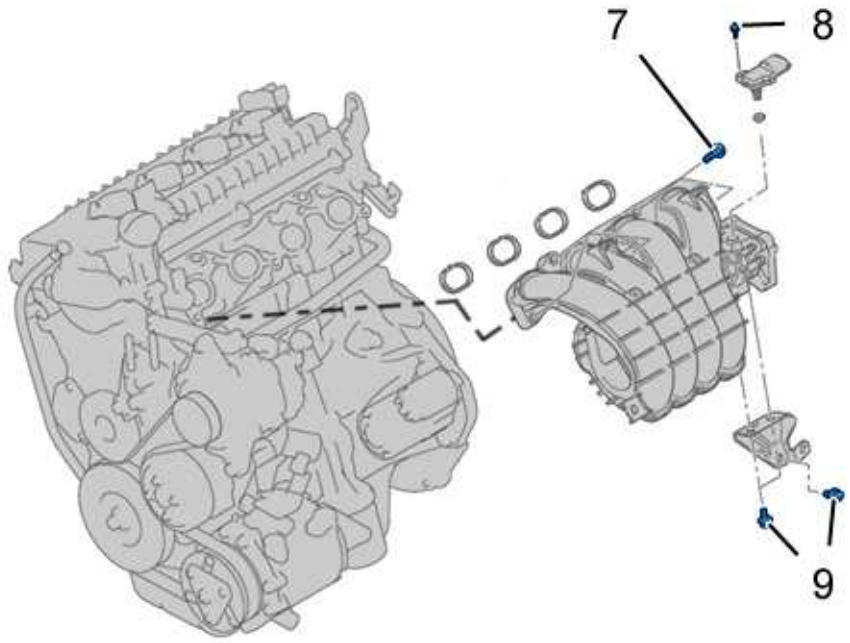

b1hb129d

Referenc	Designation	Stage	Tightening torque
(7)	bolts (Air inlet manifold) (*)	Tightening	1,9 daNm
(8)	bolts (Air temperature sensor)	Tightening	0,55 daNm
(9)	bolts (Air inlet manifold support) (*)	Tightening	1,9 daNm
(*) Follow the tightening sequence			

5 - 2 - Order of tightening : Air inlet manifold bolts and nuts (7), (9)

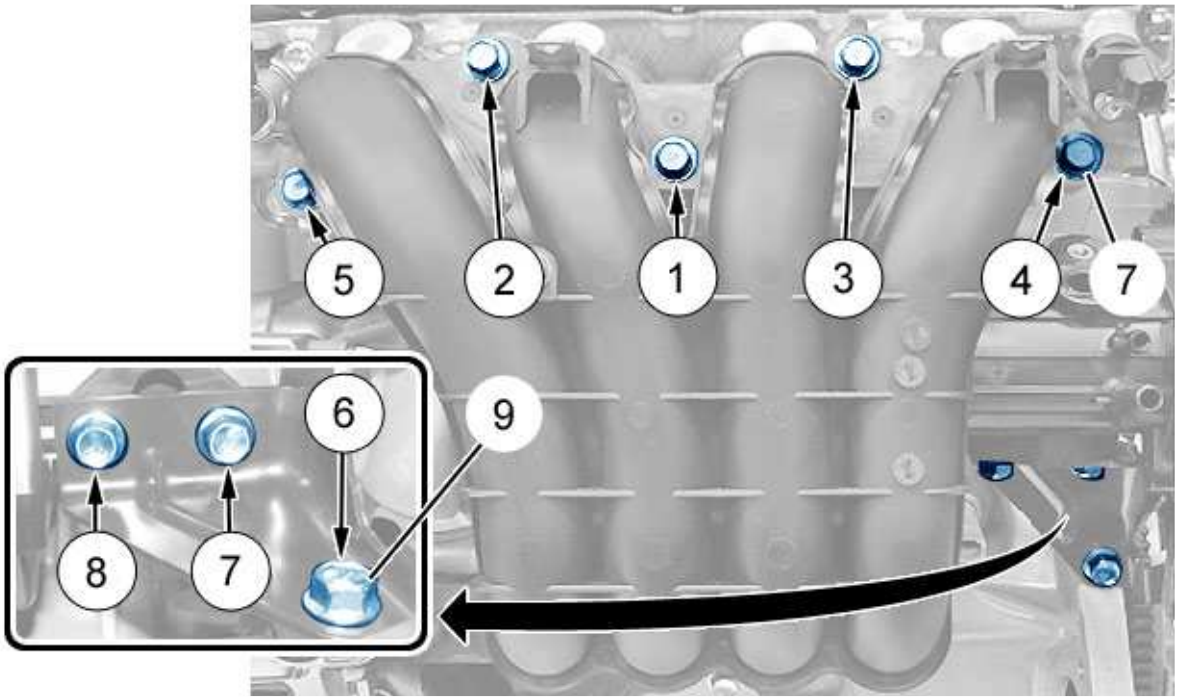

b1hb12ad

WARNING : Follow the tightening sequence

Tightening procedure :

- Tightening of the 5 bolts (7) to 1,9 m.daN (from 1 to 5)
- Tightening of the bolt (9) to 1,9 daN.m (De 6)
- Tightening of the 2 bolts (9) to 1,9 m.daN (from 7 to 8)

6 - COOLING SYSTEM

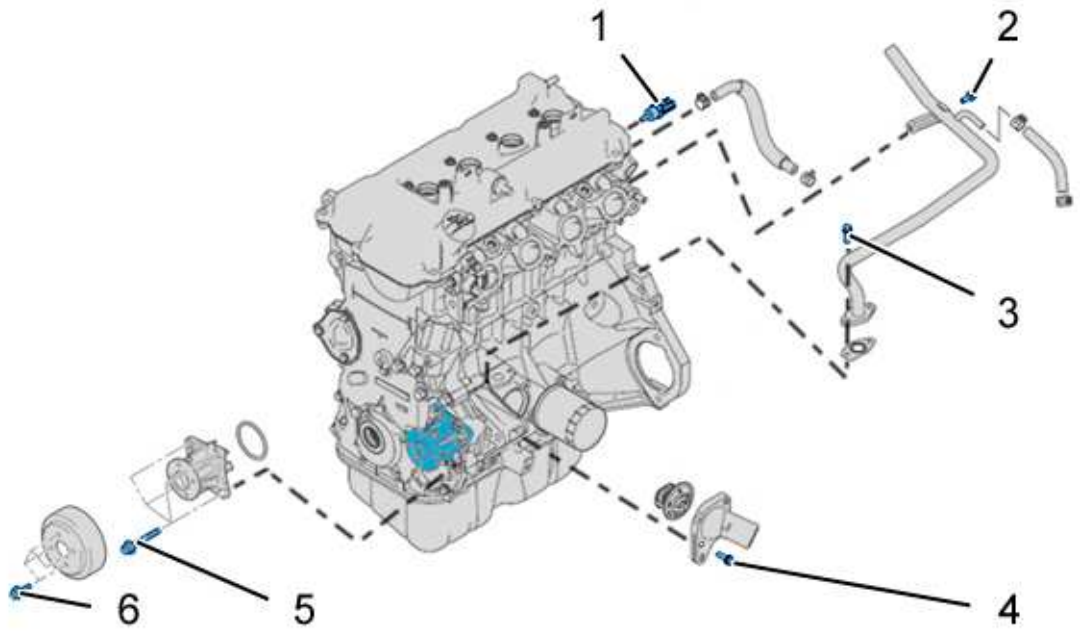

b1bb1iud

Referen	Designation	Stage	Tightening torque
(1)	Coolant temperature sensor	Tightening	3 daNm
(2)	bolts (Coolant pipe / Cylinder head)	Tightening	1,1 daNm
(3)	bolts (Coolant pipe / Cylinder block)	Tightening	1,1 daNm
(4)	bolts (Thermostat cover)	Tightening	1,1 daNm
(5)	bolts (Coolant pump)	Tightening	1,1 daNm
(6)	bolts (Coolant pump pulley)	Tightening	1,1 daNm

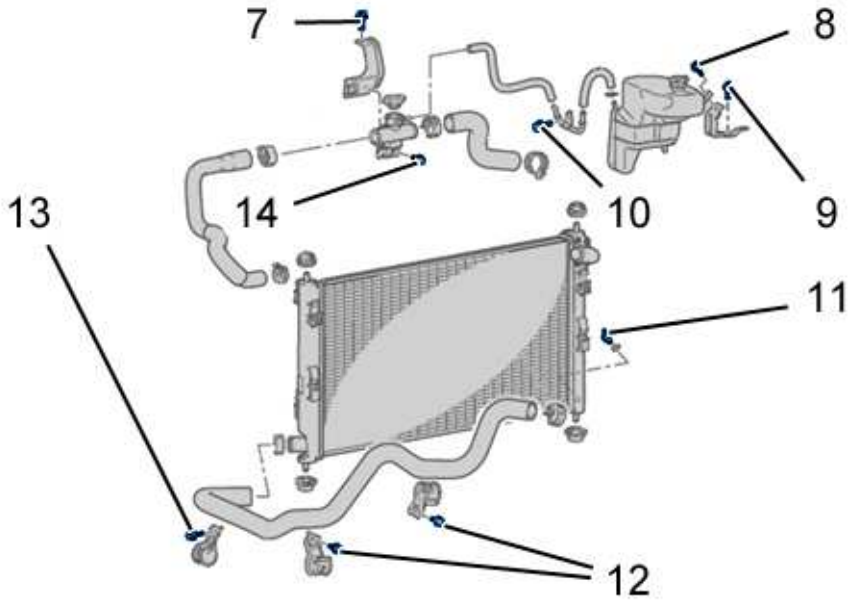

b1gb01yd

Referen	Designation	Stage	Tightening torque
(7)	bolts (Upper coolant pipe support)	Tightening	0,95 daNm
(8)	bolts (Coolant reservoir / Bracket)	Tightening	0,95 daNm
(9)	bolts (Coolant reservoir support / Body)	Tightening	0,5 daNm
(10)	bolts (Connecting pipe / Body)	Tightening	0,4 daNm
(11)	Engine cooling radiator drain screw	Tightening	0,30 daNm
(12)	bolts (Clamp on body)	Tightening	0,85 daNm
(13)	bolts (Clamp on body)	Tightening	0,95 daNm
(14)	bolts (Upper coolant pipe)	Tightening	0,95 daNm

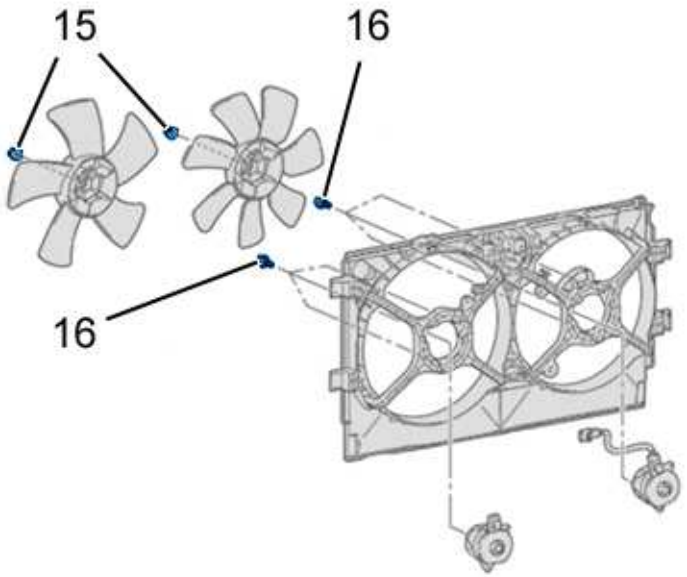

b1gb01zd

Referen	Designation	Stage	Tightening torque
(15)	Nut (Fan)	Tightening	0,34 daNm
(16)	bolts (Cooling fan)	Tightening	0,44 daNm

7 - INJECTION SYSTEM

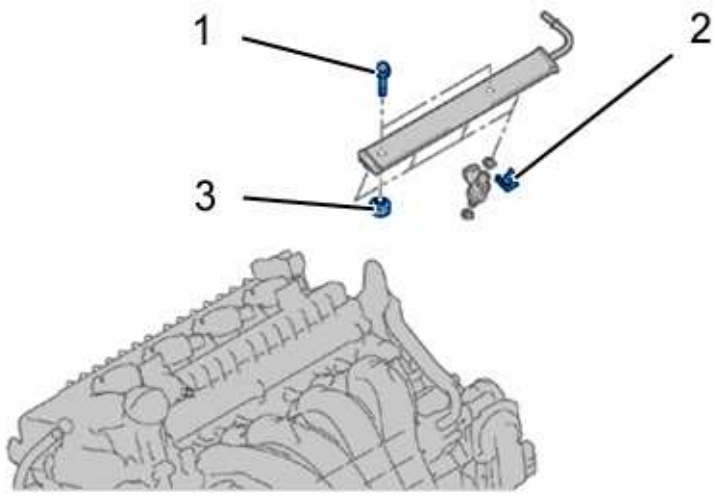

b1hb12bd

Referenc	Designation	Stage	Tightening torque
(1)	bolts (Injection rail)	Tightening	1,4 daNm
(2)	Clip	Tightening	-
(3)	Spacer	Tightening	-

8 - ALTERNATOR

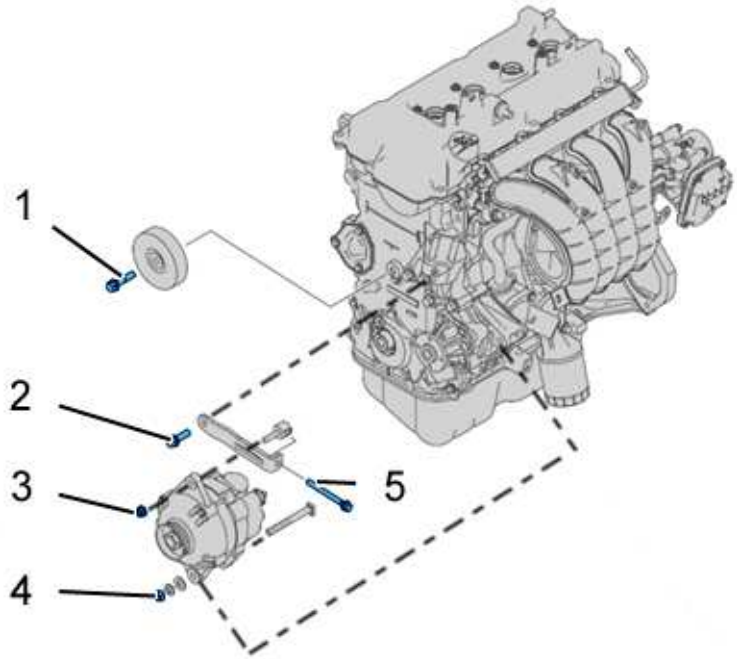

b1hb12cd

Referenc	Designation	Stage	Tightening torque
(1)	bolts (Ancillary drive belt idler roller)	Tightening	4,9 daNm
(2)	bolts (Alternator upper support)	Tightening	3,7 daNm
(3)	Nut (Alternator upper fixing)	Tightening	2,3 daNm
(4)	Nut (Alternator lower fixing)	Tightening	4,7 daNm
(5)	Ancillary drive belt tension bolt	Tightening	0,5 daNm
	Nut (Power circuit)	Tightening	1,2 daNm

9 - AIR CONDITIONING COMPRESSOR

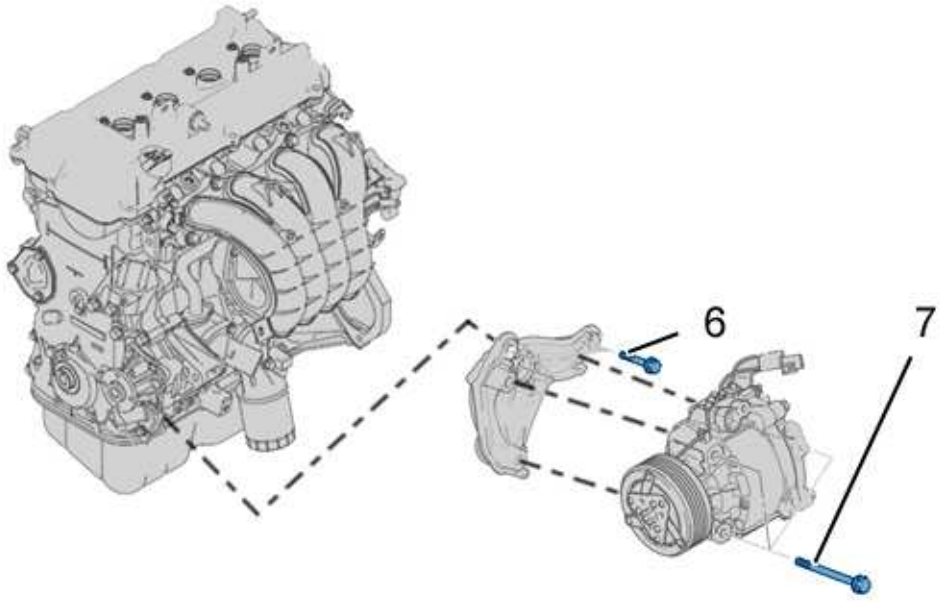

b1hb12dd

Referenc	Designation	Stage	Tightening torque
(6)	bolts (Air conditioning compressor support)	Tightening	2,3 daNm
(7)	bolts (Air conditioning compressor)	Tightening	2,3 daNm

10 - STARTER

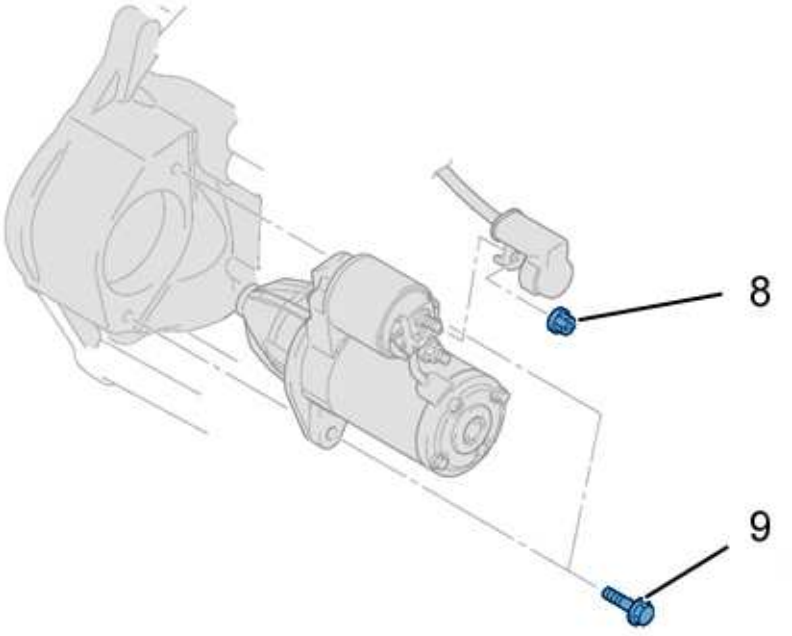

d1bb00jd

Referenc	Designation	Stage	Tightening torque
(8)	Nut (Starter supply cable)	Tightening	1,1 daNm
(9)	bolts (Starter)	Tightening	2,4 daNm

DISMANTLING - RE-ASSEMBLY : EXHAUST CATALYTIC CONVERTER

ESSENTIAL : Observe the safety and cleanliness recommendations

ESSENTIAL : Respect the safety and cleanliness requirements relating to the particle filter

ESSENTIAL : Engine hot : Wait at least one hour before carrying out any work on the exhaust line

1 - REMOVING

Put the vehicle on a hoist.

Disconnect the battery.

Remove :

- The engine style cover
- The upstream exhaust gas temperature sensor

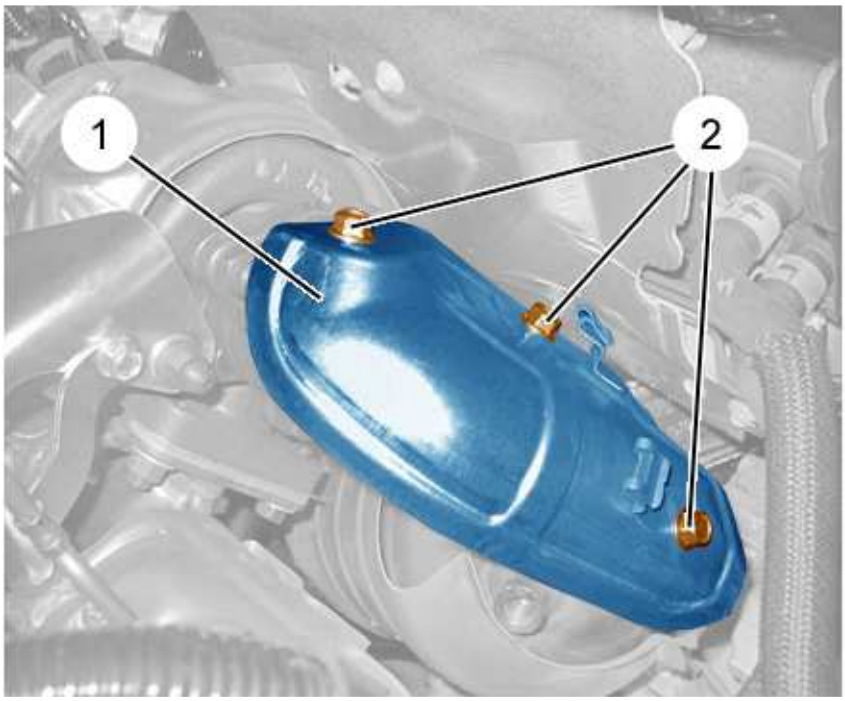

b1jg0nbd

Remove :

- The bolts (2)
- The heat shield (1)

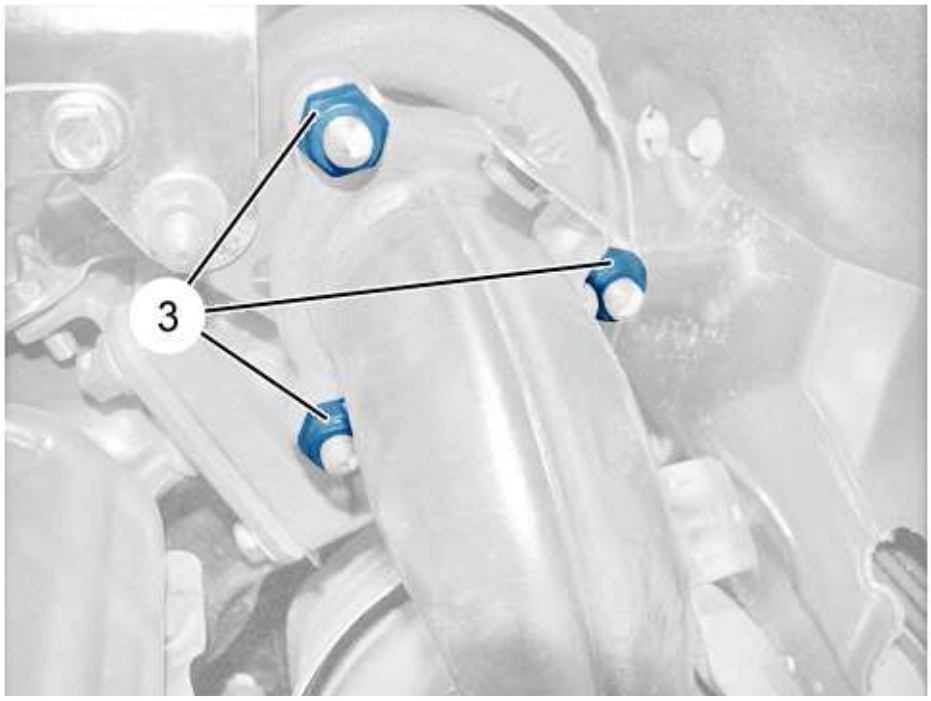

b1jg0ncd

Remove : The nuts (3).

Release : **The intermediate exhaust line**.

Remove the downstream exhaust gas temperature sensor.

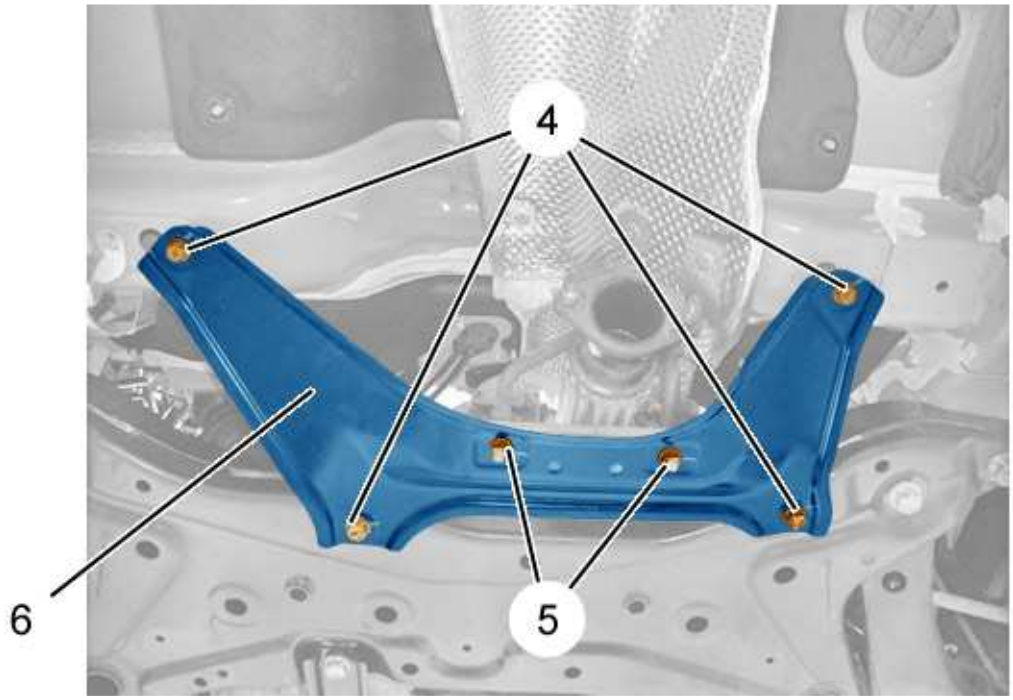

b1jg0ndd

Remove :

- The nuts (5)
- The bolts (4)
- The bracket (6)

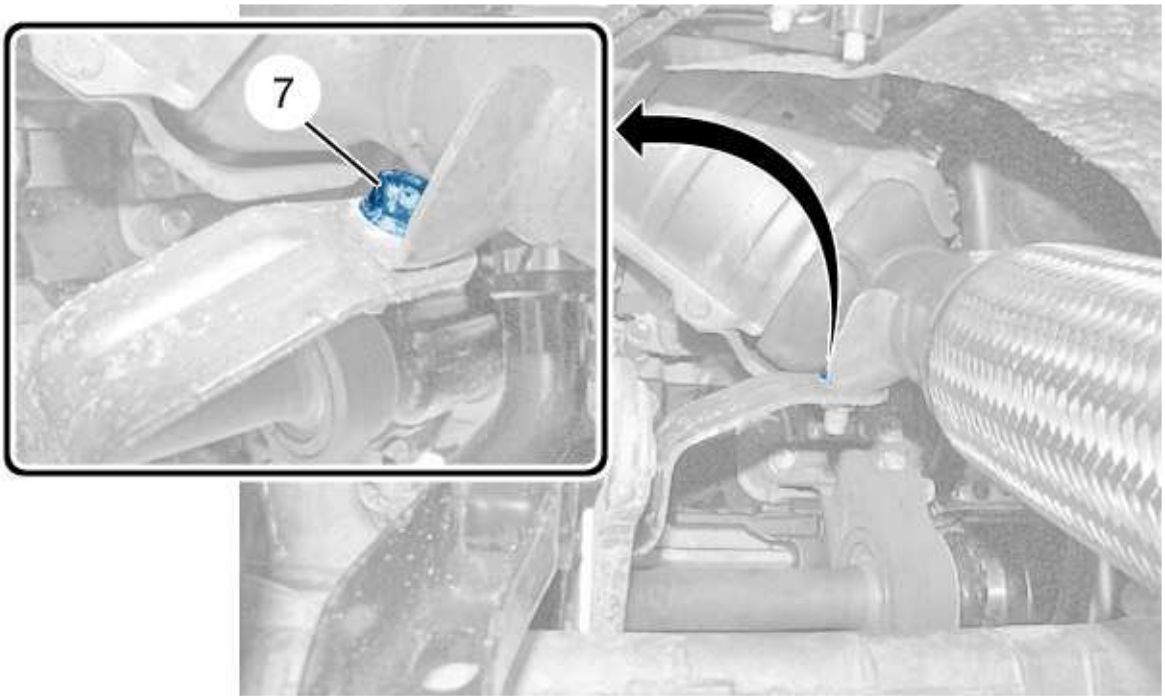

b1jg0ned

Remove the bolt (7).

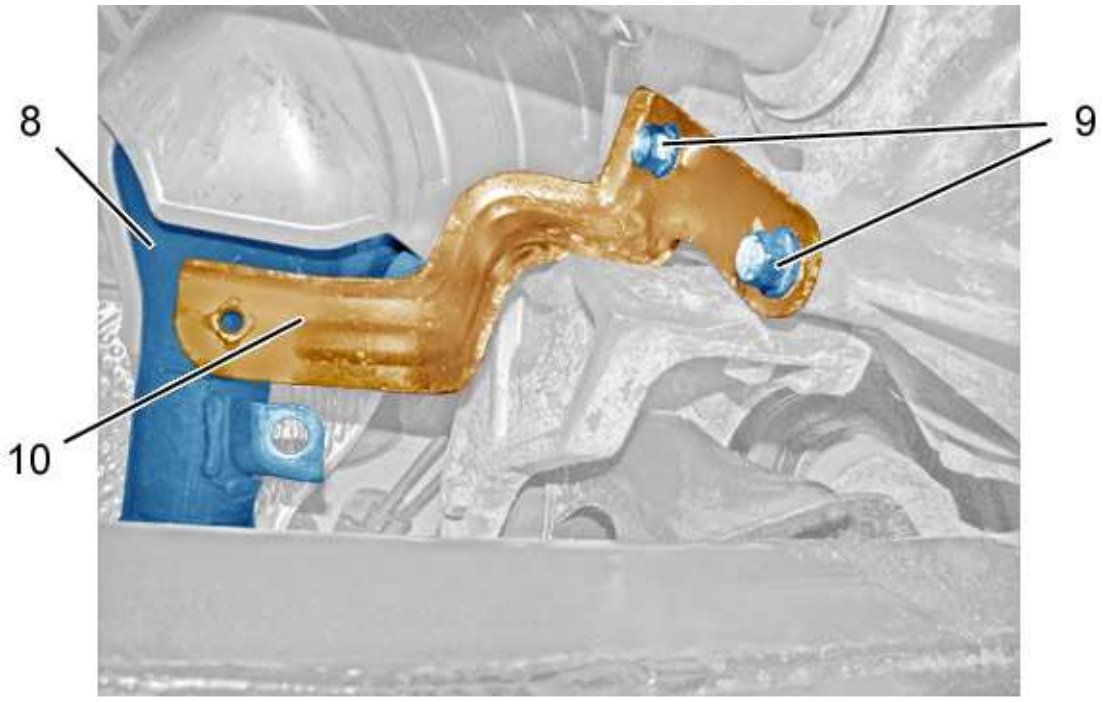

b1jg0nfd

Remove :

- The bolts (9)
- The bracket (10)
- The catalytic converter (8) (from underneath the vehicle)

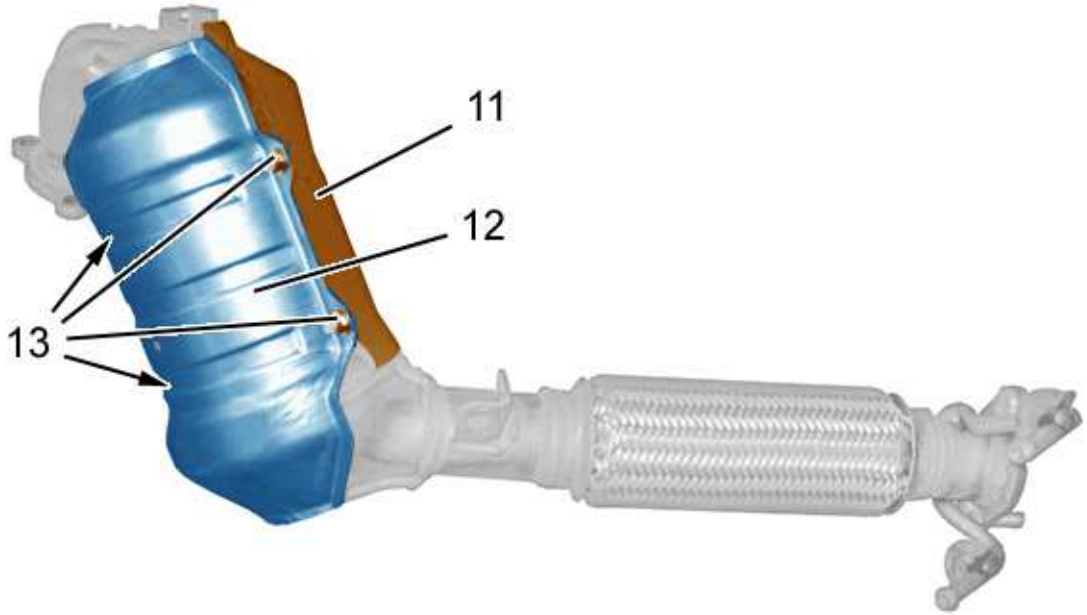

b1jg0ngd

Remove :

- The bolts (13)
- The heat shields (11), (12)

2 - REFITTING

> **WARNING :** Adhere to the tightening torques

Refit :

- The heat shields (11), (12)
- The bolts (13)



b1jg0nhd

> **WARNING :** Always replace the seal (14)

Refit :

- The catalytic converter (8) (from underneath the vehicle)
- The bracket (10)

> **WARNING :** Systematically replace the nuts (3)

Finger tighten :

- The bolts (9)
- The securing bolt (7)
- The nuts (3)

Tighten to the specified torque :

- The nuts (3)
- The securing bolt (7)
- The bolts (9)

Refit :

- The bracket (6)
- The bolts (4)
- The bolts (5)

Refit the downstream exhaust gas temperature sensor.

Position : The intermediate exhaust line.

Refit :

- The vehicle to its wheels
- The heat shield (1)
- The bolts (2)
- The upstream exhaust gas temperature sensor
- The engine style cover

> **WARNING :** Perform the operations to be carried out following reconnection of the battery

Reconnect the battery.

Perform a forced regeneration of the particle filter.

3 - REQUIREMENTS FOR SENDING THE USED CATALYTIC CONVERTER

Block the holes of the catalytic converter with the plugs and cover from the new catalytic converter.

Place the used catalytic converter (8) in the bag of the new catalytic converter.

Place this in the original packaging.

DISMANTLING - RE-ASSEMBLY : EXHAUST GAS TEMPERATURE SENSOR

ESSENTIAL : Observe the safety and cleanliness recommendations

1 - TOOLING

Equipment : Diagnostic tool.

tool	Reference	Designation
[1603-ZZ] 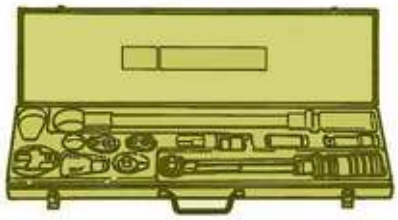 *e5ag06gt*	[1603-ZZ]	Tightening kit

ESSENTIAL : Respect the safety and cleanliness requirements relating to the particle filter

ESSENTIAL : Engine hot : Wait at least one hour before carrying out any work on the exhaust line

2 - UPSTREAM EXHAUST GAS TEMPERATURE SENSOR

2 - 1 - Location (old and new fit)

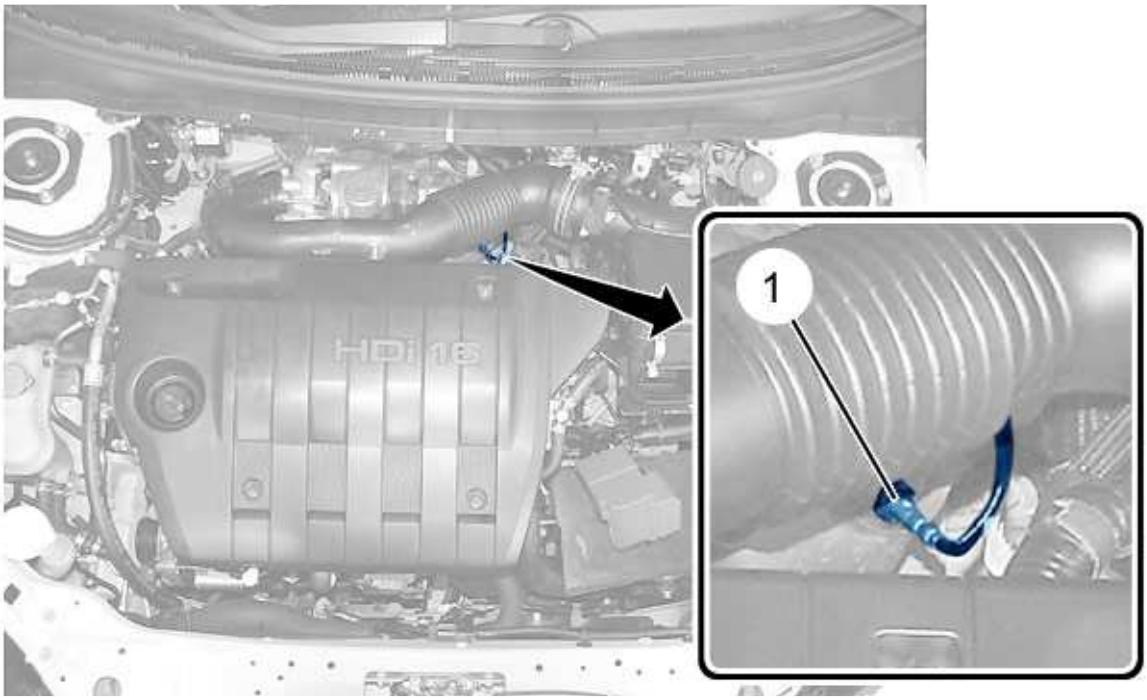

b1bg328d

(1) Upstream exhaust gas temperature sensor.

2 - 2 - Removing

Disconnect the ancillaries battery.

Remove the engine style cover .

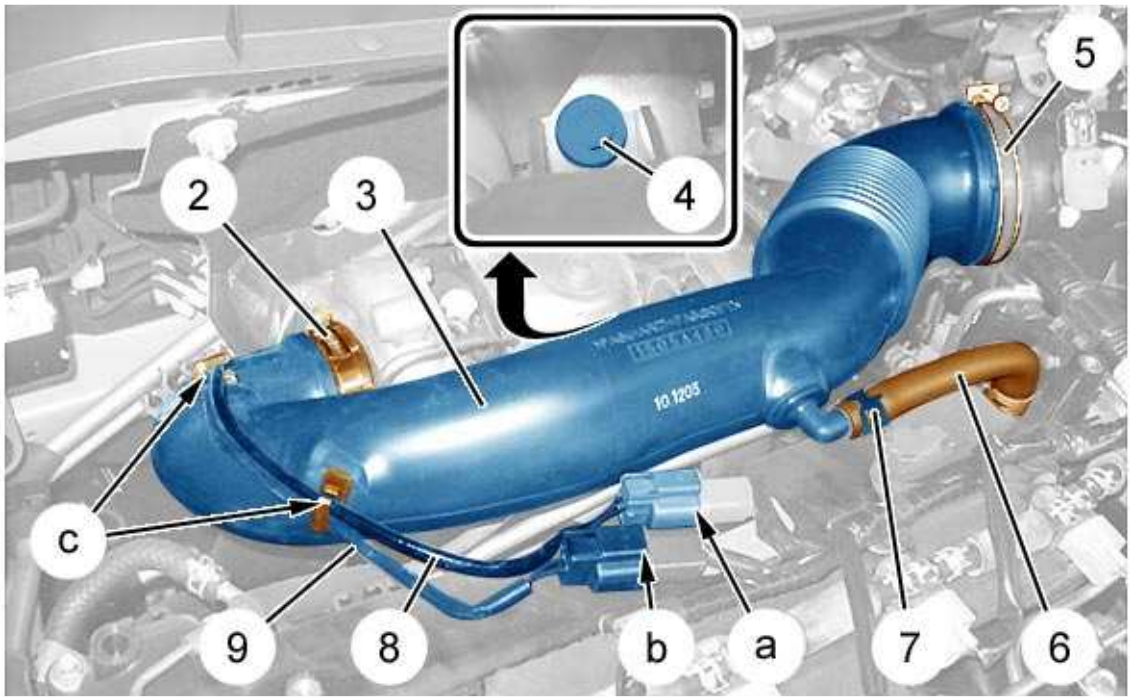

b1bg38pd

Unscrew :

- The clip (2)
- The clip (5)

Push back the collar (7).

Uncouple the pipe (6).

Unplug :

- The connector (at "a")
- The connector (at "b")

Unfasten and move aside :

- The electrical harness (8) (at "c")
- The electrical harness (9) (at "c")

Remove the bolt (4).

Remove the air intake union (3).

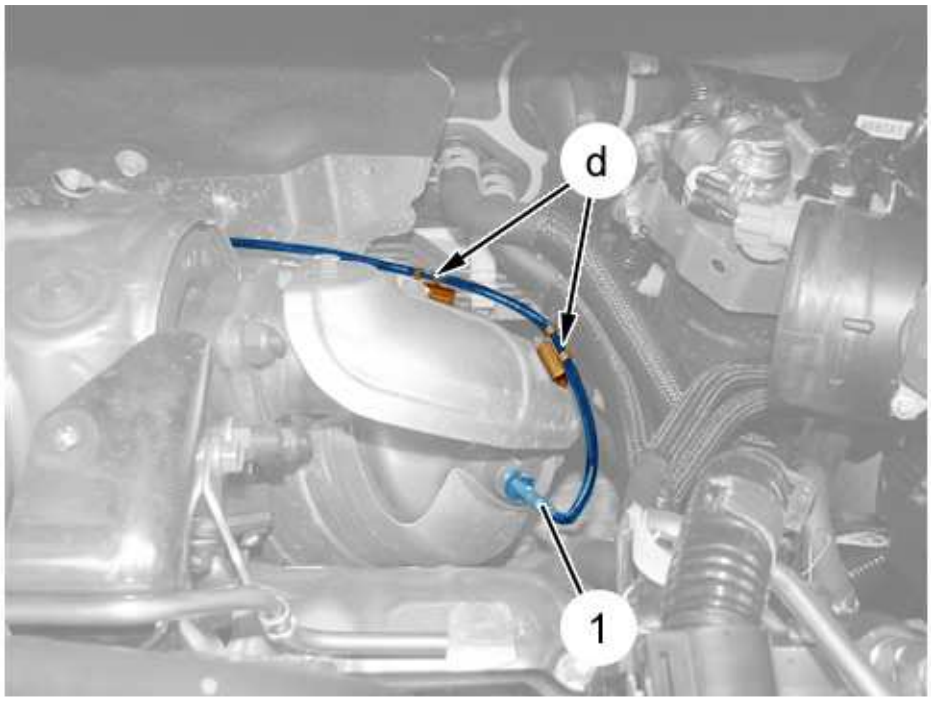

b1kg0g1d

Move aside the electrical harness (at "d").

Déposer la sonde (1) de température des gaz d'échappement amont ; Using the tools [1603-ZZ].

2 - 3 - Refitting

WARNING : Adhere to the tightening torques

Reposer la sonde (1) de température des gaz d'échappement amont ; Using the tools [1603-ZZ].

Put the electrical harness in place (at "d").

Refit the air intake union (3).

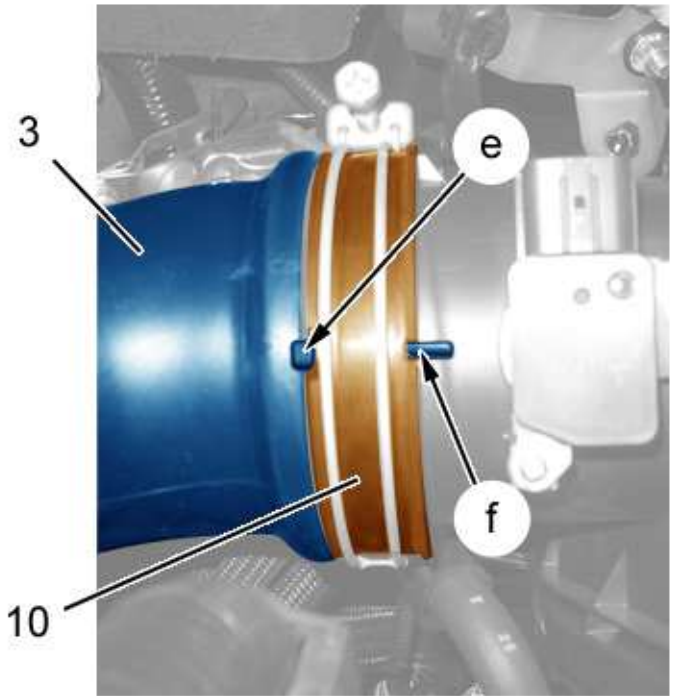

b1kg0g2d

WARNING : Check that the seal (10) is correctly positioned

Check that the references "e" and "f" are still in line with the references on the seal (10).

Refit bolt (4).

Put in place and clip :

- The electrical harness (9) (at "c")
- The electrical harness (8) (at "c")

Connect the connectors (at "a" and "b").

Connect the hose (6).

Put the clip (7) in place.

Tighten :

- The clip (2)
- The clip (5)

Refit the engine style cover .

> **WARNING :** Perform the operations that are required following a reconnection of the ancillaries battery

Reconnect the ancillaries battery.

Deletion of fault codes ; Using the diagnostic equipment.

Perform a forced regeneration of the particle filter.

3 - DOWNSTREAM EXHAUST GAS TEMPERATURE SENSOR

3 - 1 - Location

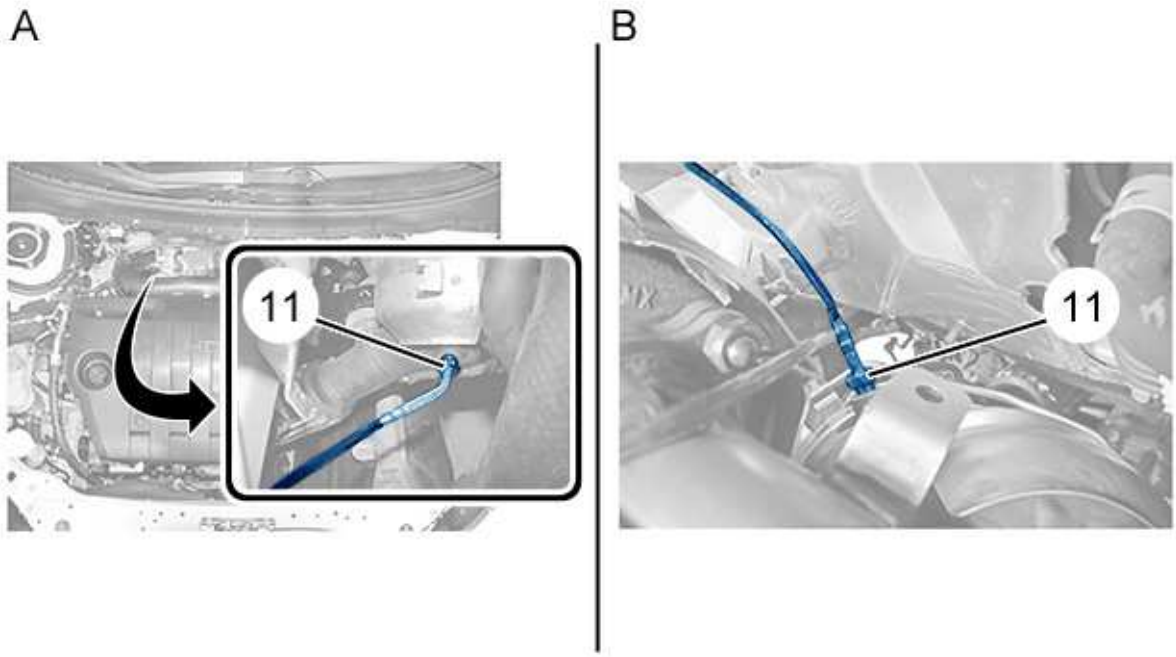

b1kg0ipd

(11) Downstream exhaust gas temperature sensor.

3 - 2 - Removing (Previous assembly)

Disconnect the ancillaries battery.

Remove the engine style cover .

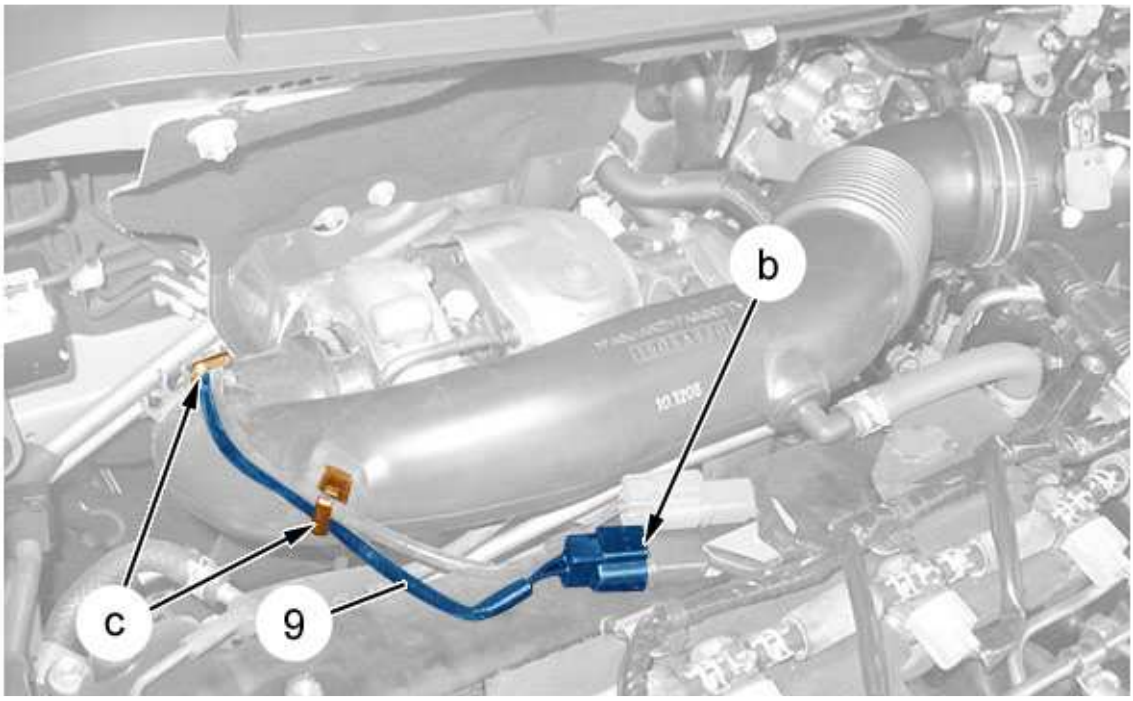

b1bg32bd

Disconnect the connector (at "b").

Release and move aside the electrical harness (9) (at "c").

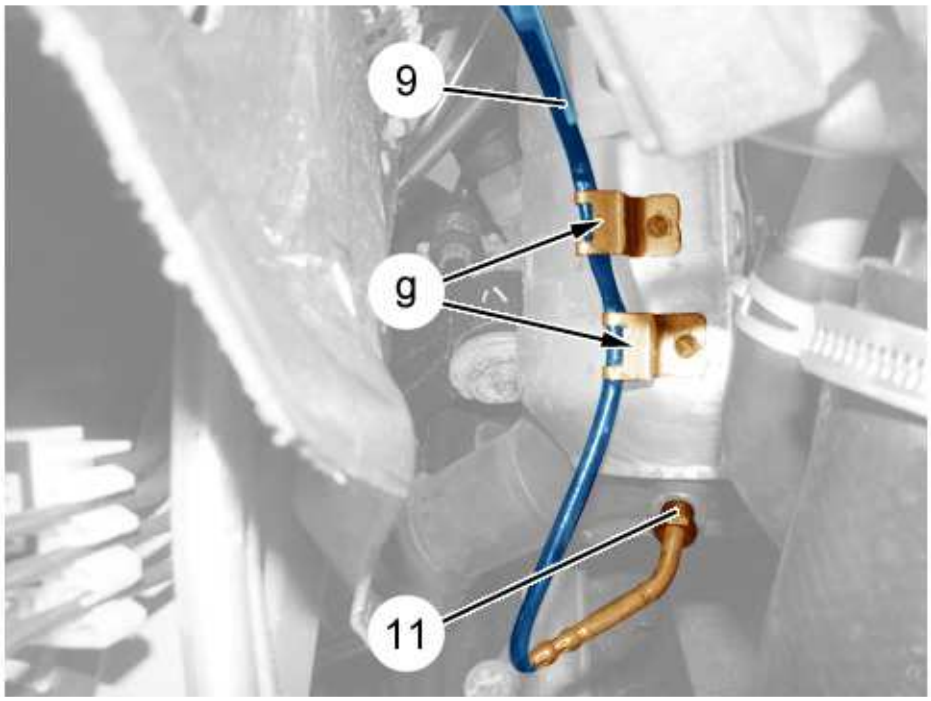

b1kg0g3d

Remove the under-engine protection.

Move aside the electrical harness (9) (at "g").

WARNING : Note the orientation of the downstream exhaust gas temperature sensor (11)

Déposer la sonde (11) de température des gaz d'échappement aval ; Using tool [1603-ZZ].

3 - 3 - Removing (New assembly)

Remove the engine style cover .

Disconnect the ancillaries battery.

Disconnect the connector of the downstream exhaust gas temperature sensor (11).

Déposer la sonde (11) de température des gaz d'échappement aval ; Using the tools [1603-ZZ].

3 - 4 - Refitting (Previous assembly)

WARNING : Adhere to the tightening torques

Reposer la sonde (11) de température des gaz d'échappement aval ; Using tool [1603-ZZ].

Put the electrical harness (9) in place (at "g").

Refit :

- The protective panel under the engine
- The vehicle to its wheels

Put in place and clip the electrical harness (9) (at "c").

Connect the connector (at "b").

Refit the engine style cover .

WARNING : Perform the operations that are required following a reconnection of the ancillaries battery

Reconnect the ancillaries battery.

3 - 5 - Refitting (New assembly)

WARNING : Adhere to the tightening torques

Reposer la sonde (11) de température des gaz d'échappement aval ; Using the tools [1603-ZZ].

Reconnect the connector of the downstream exhaust gas temperature sensor (11).

Refit the engine style cover .

> **WARNING :** Perform the operations that are required following a reconnection of the ancillaries battery

Reconnect the ancillaries battery.

Deletion of fault codes ; Using the diagnostic equipment.

Perform a forced regeneration of the particle filter.

4 - PARTICLE FILTER EXHAUST GAS TEMPERATURE SENSOR

4 - 1 - Location

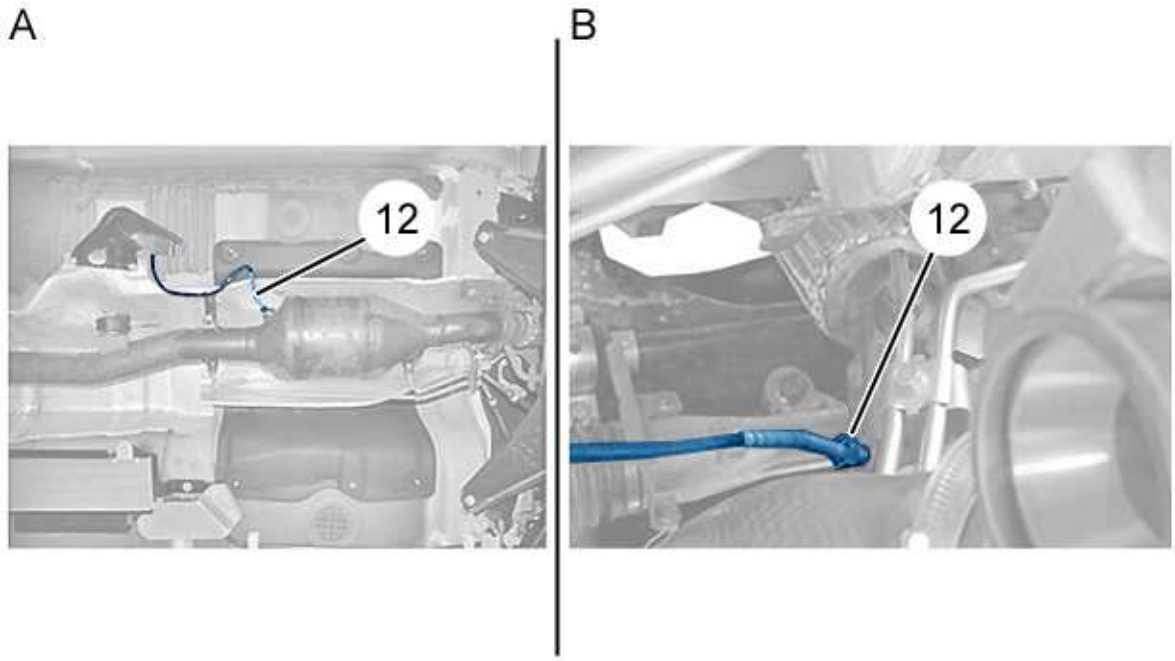

b1kg0iqd

(12) Particle filter exhaust gas temperature sensor.

4 - 2 - Removing (Previous assembly)

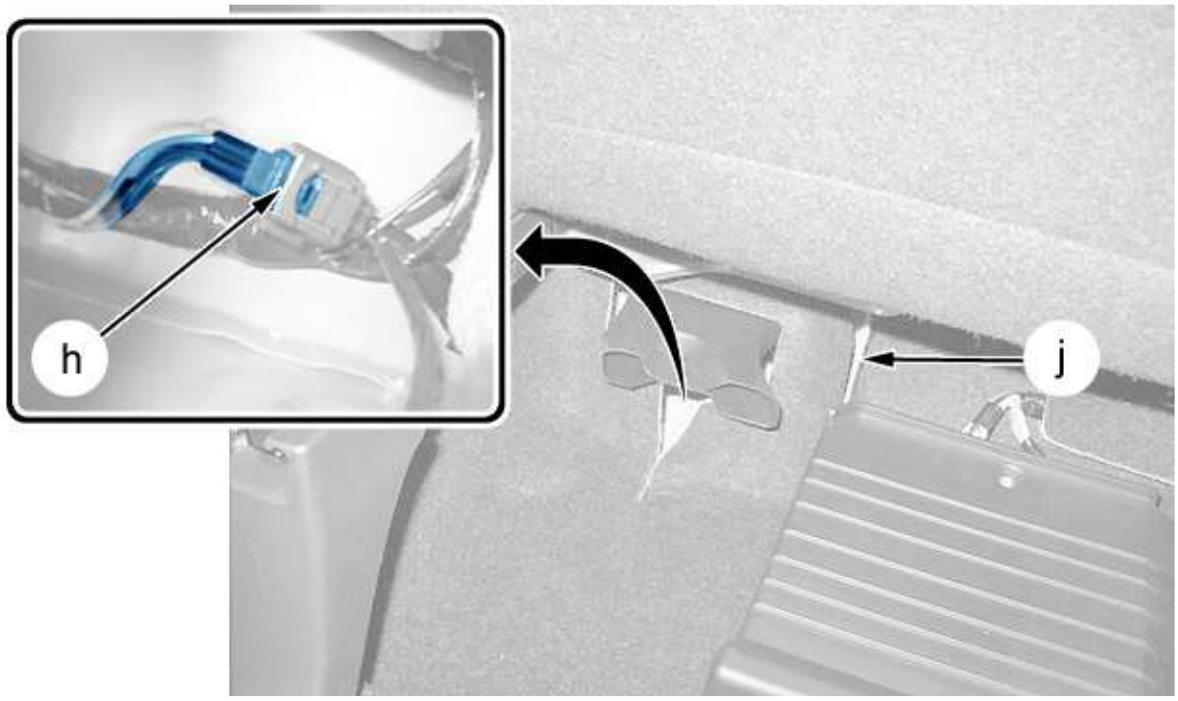

b1kg0g5d

Disconnect the ancillaries battery.

Move the right-hand front seat forward fully.

Disconnect the connector (at "h") ; Pass your hand (at "j").

Lift and support the vehicle.

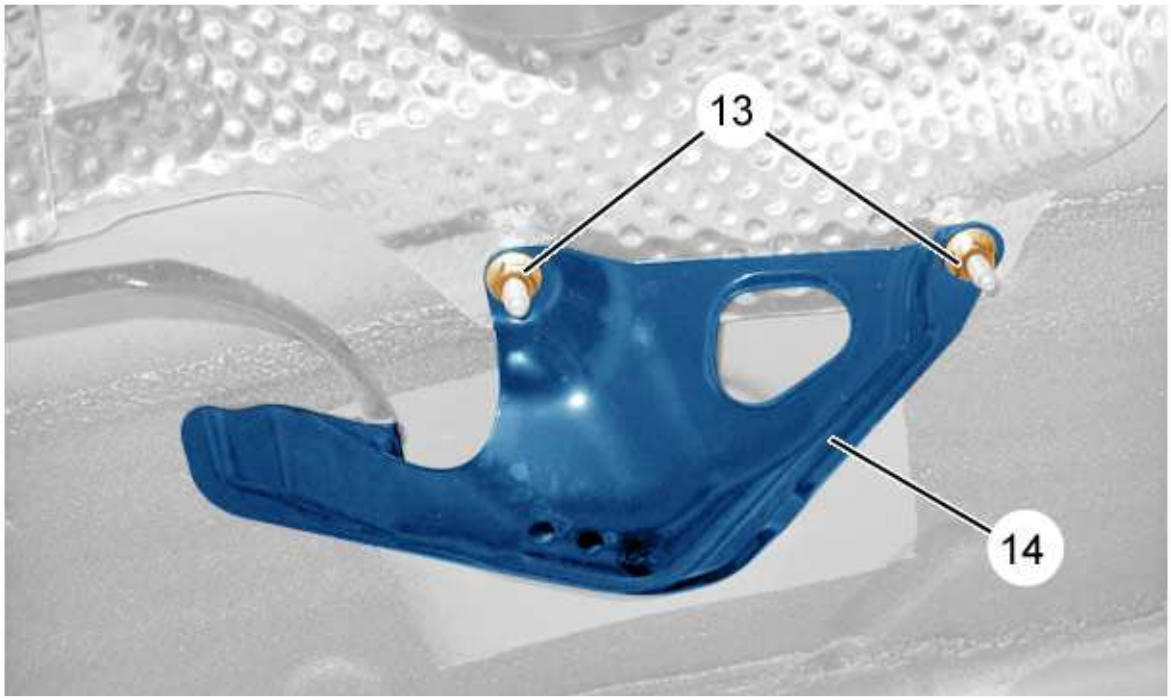

b1kg0g6d

Remove the 2 fixing nuts (13).

Move aside the protector (14).

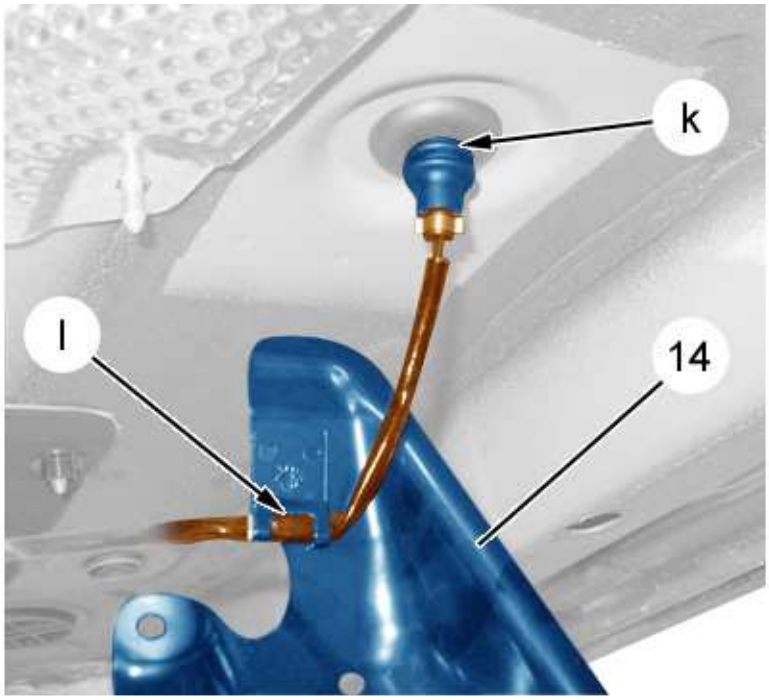

b1kg0g7d

Move aside the electrical harness (at "l").

Remove the protector (14).

Release the grommet (at "k").

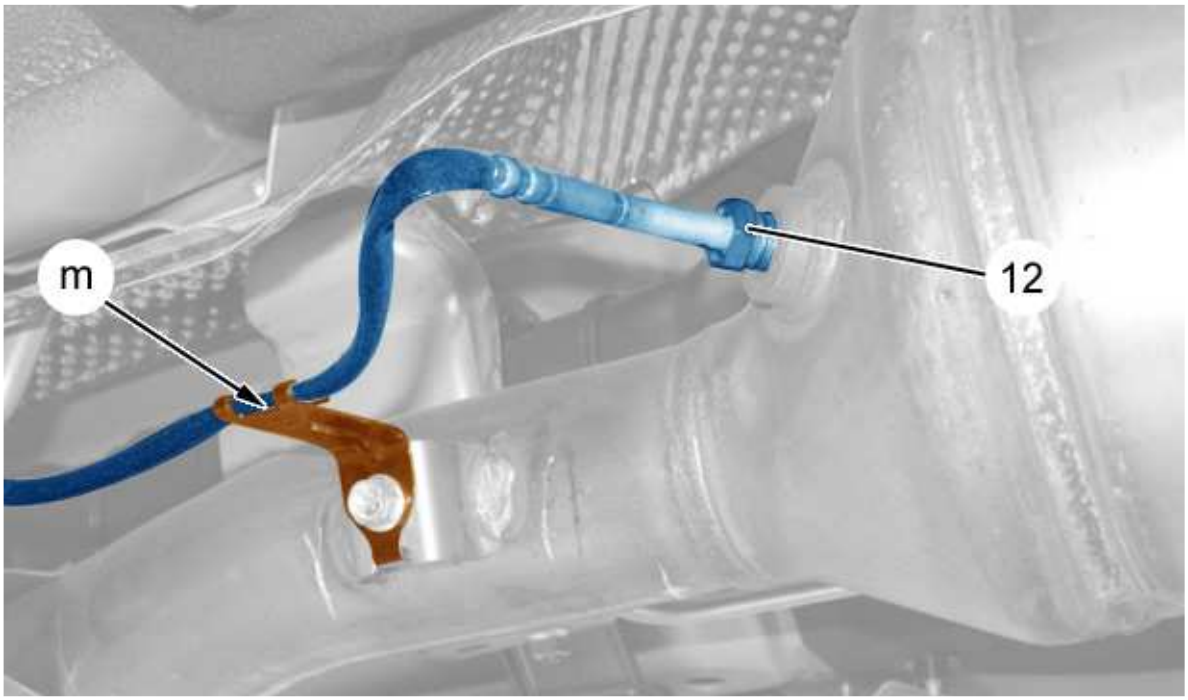

b1kg0g8d

Move aside the electrical harness (at "m").

> **WARNING :** Note the orientation of the particle filter exhaust gas temperature sensor (12)

Remove the exhaust gas temperature sensor (12) on the particle filter ; Using the tools [1603-ZZ].

4 - 3 - Removing (New assembly)

Disconnect the ancillaries battery.

Remove the engine style cover .

Disconnect the connector of the particle filter exhaust gas temperature sensor (12).

Remove the exhaust gas temperature sensor (12) on the particle filter ; Using the tools [1603-ZZ].

4 - 4 - Refitting (Previous assembly)

> **WARNING :** Adhere to the tightening torques

Refit the exhaust gas temperature sensor (12) on the particle filter ; Using the tools [1603-ZZ].

Put the electrical harness in place (at "m").

Attach the grommet (at "k").

Reposition the protection (14).

Put the electrical harness in place (at "l").

Refit the cover (14).

Refit the 2 fixing nuts (13).

Return the vehicle to its wheels.

Connect the connector (at "h") ; Pass your hand (at "j").

Move the front right seat back as far as possible.

> **WARNING :** Perform the operations that are required following a reconnection of the ancillaries battery

Reconnect the ancillaries battery.

4 - 5 - Refitting (New assembly)

> **WARNING :** Adhere to the tightening torques

Refit the exhaust gas temperature sensor (12) on the particle filter ; Using the tools [1603-ZZ].

Reconnect the connector of the exhaust gas temperature sensor (12) on the particle filter .

Deletion of fault codes ; Using the diagnostic equipment.

Perform a forced regeneration of the particle filter.

Refit the engine style cover .

> **WARNING :** Perform the operations that are required following a reconnection of the ancillaries battery

Reconnect the ancillaries battery.

5 - CHECKING

Start the engine.

Check :

- The absence of exhaust gas leaks
- That the exhaust gas temperature sensors are working; Using the diagnostic equipment

Stop the engine.

DISMANTLING - RE-ASSEMBLY : EXHAUST SYSTEM

ESSENTIAL : Observe the safety and cleanliness recommendations

1 - TOOLING

Equipment : Component lift.

2 - EXHAUST SILENCER

Put the vehicle on a hoist.

2 - 1 - Removing

ESSENTIAL : Engine hot : Wait at least one hour before carrying out any work on the exhaust line

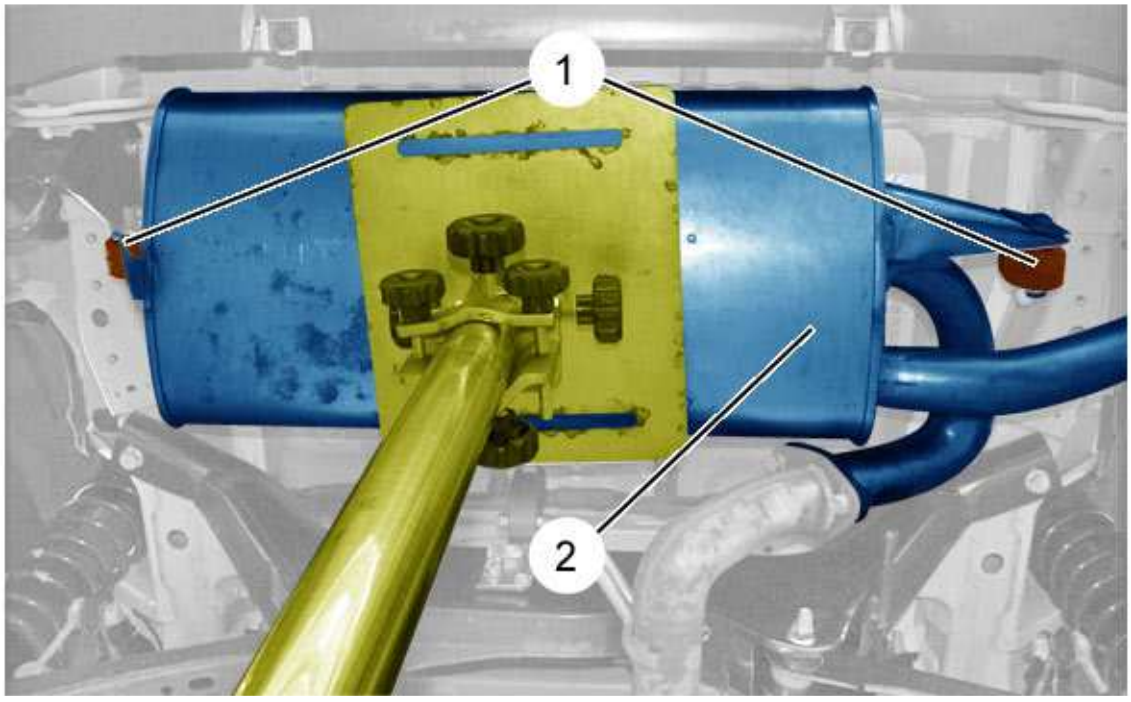

b1jg0n3d

Place the component lift under the exhaust silencer (2).

Uncouple the hangers (1) from the silencer (2).

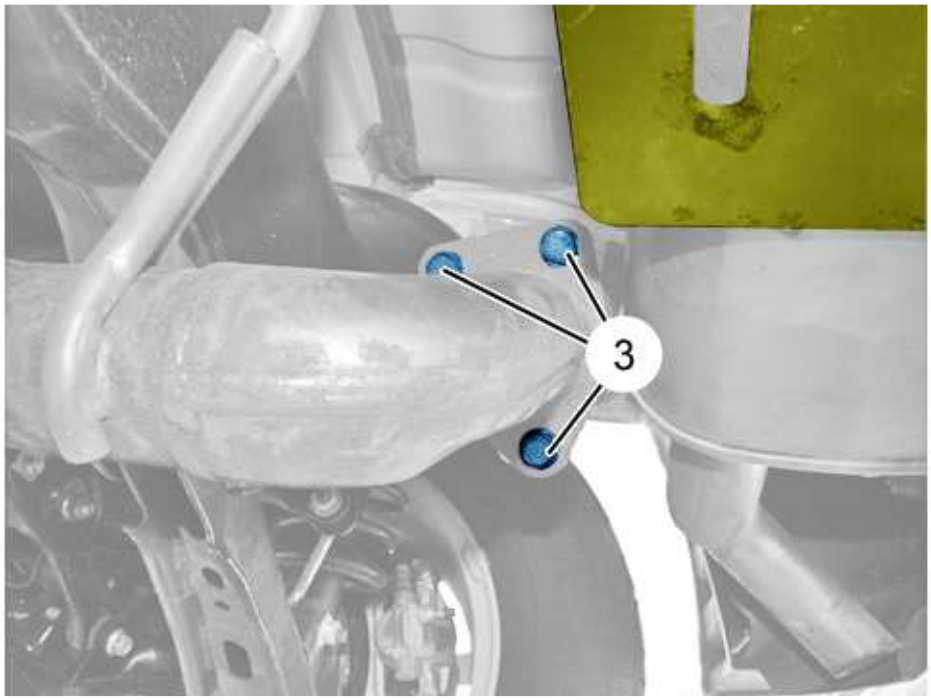

b1jg0n4d

Remove :

- The 3 bolts (3)
- The exhaust silencer (2) (with the seal) ; Using the component lift

2 - 2 - Refitting

> **WARNING :** Adhere to the tightening torques

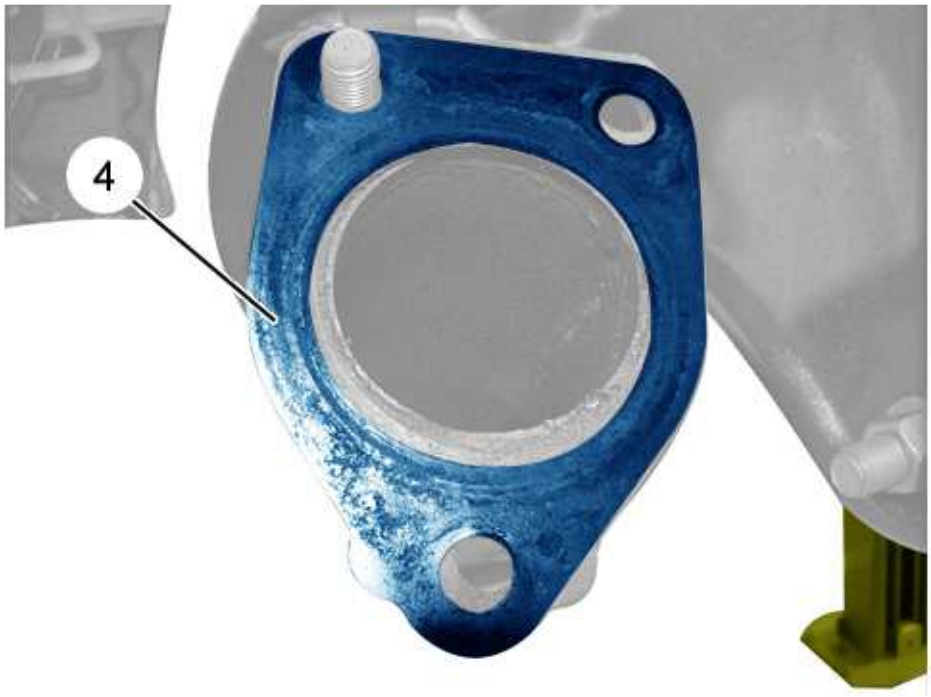

b1jg0n5d

WARNING : Systematically replace the seal (4)

WARNING : Always replace the 3 bolts (3)

Refit :

- Seal (4)
- The exhaust silencer (2) ; Using the component lift
- The 3 bolts (3)

WARNING : Replace the faulty exhaust flexible mountings

Couple up the flexible mountings (1).

Remove the unit lifting jack.

Start the engine.

Check that there are no leaks.

Return the vehicle to its wheels.

3 - INTERMEDIATE EXHAUST LINE AND PARTICLE FILTER ASSEMBLY

3 - 1 - Removing

ESSENTIAL : Engine hot : Wait at least one hour before carrying out any work on the exhaust line

Put the vehicle on a hoist.

Remove :

- The pressure take-offs of the exhaust gas pressure sensor ; (according to model)
- The particle filter exhaust gas temperature sensor on the particle filter; (according to model)
- Place the component lift under the exhaust line

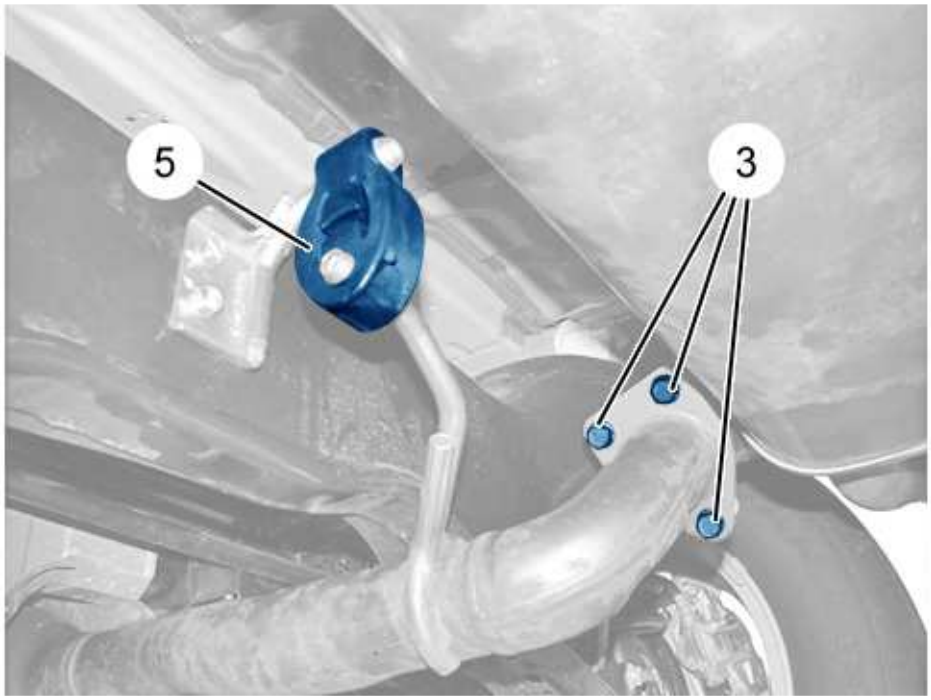

b1jg0n6d

Uncouple the hanger (5).

Remove :

- The 3 bolts (3)
- Seal (4)

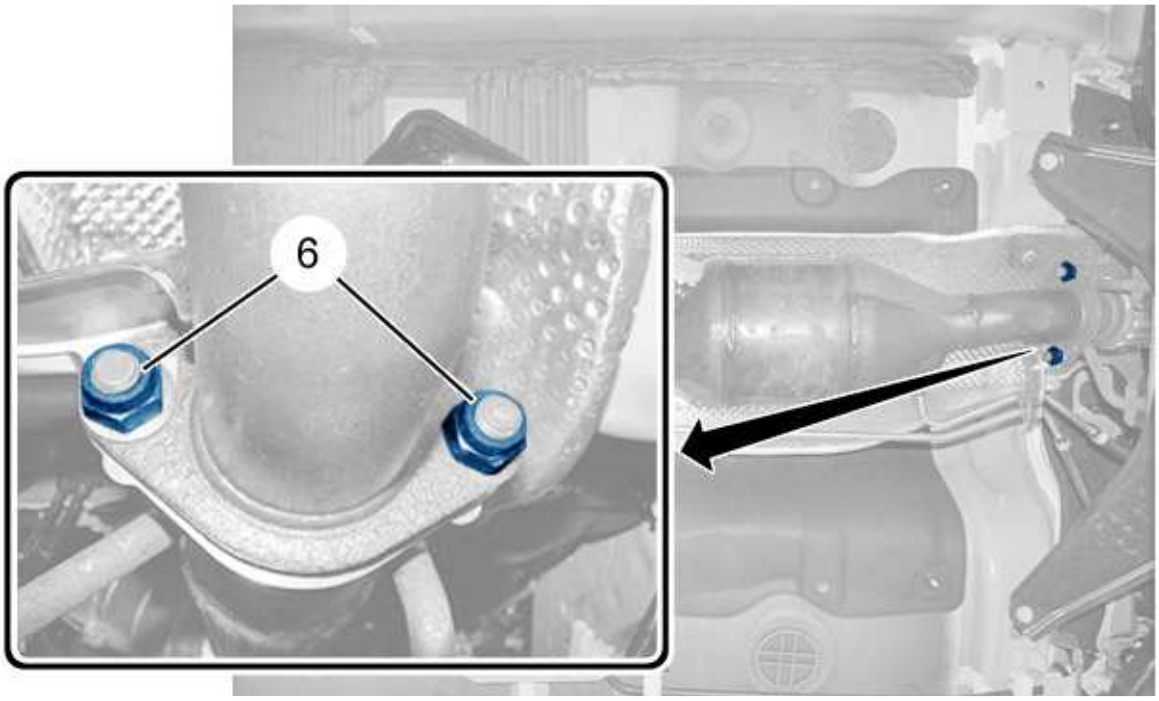

b1jg0n7d

Remove the 2 fixing nuts (6).

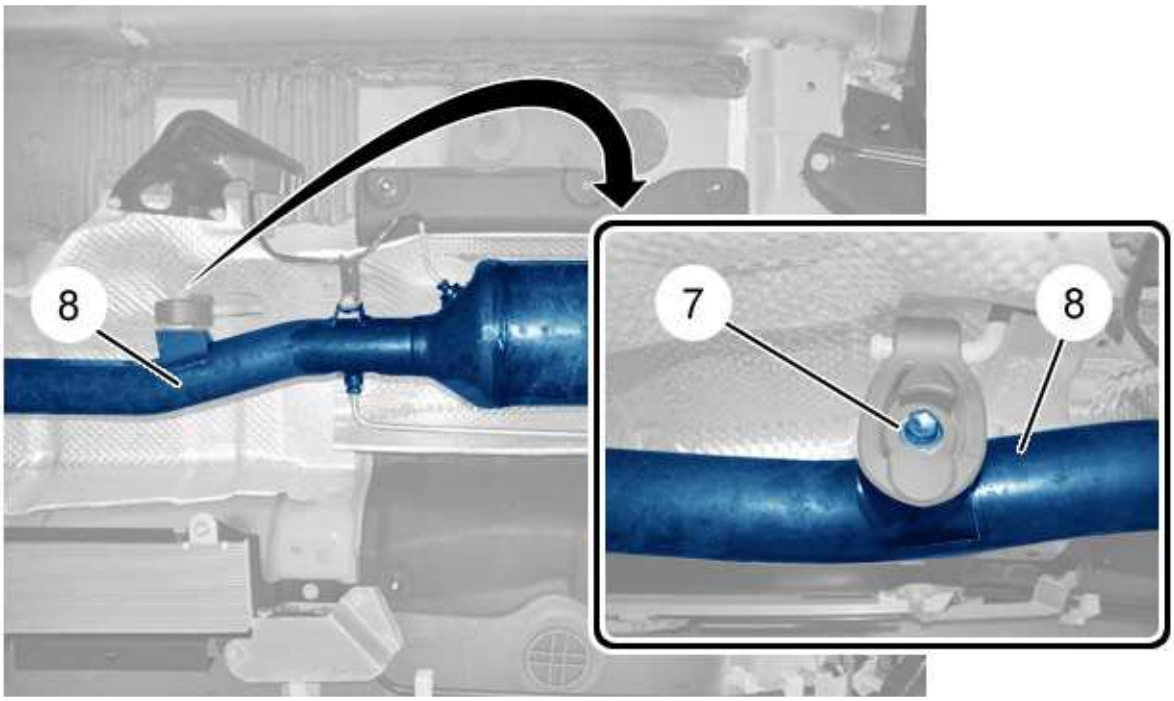

b1jg0n8d

Remove :

- The (7) bolt
- The intermediate exhaust line and particle filter assembly (8) ; Using the component lift

3 - 2 - Refitting

WARNING : Adhere to the tightening torques

WARNING : Systematically replace the nuts (6)

WARNING : Always replace the 3 bolts (3)

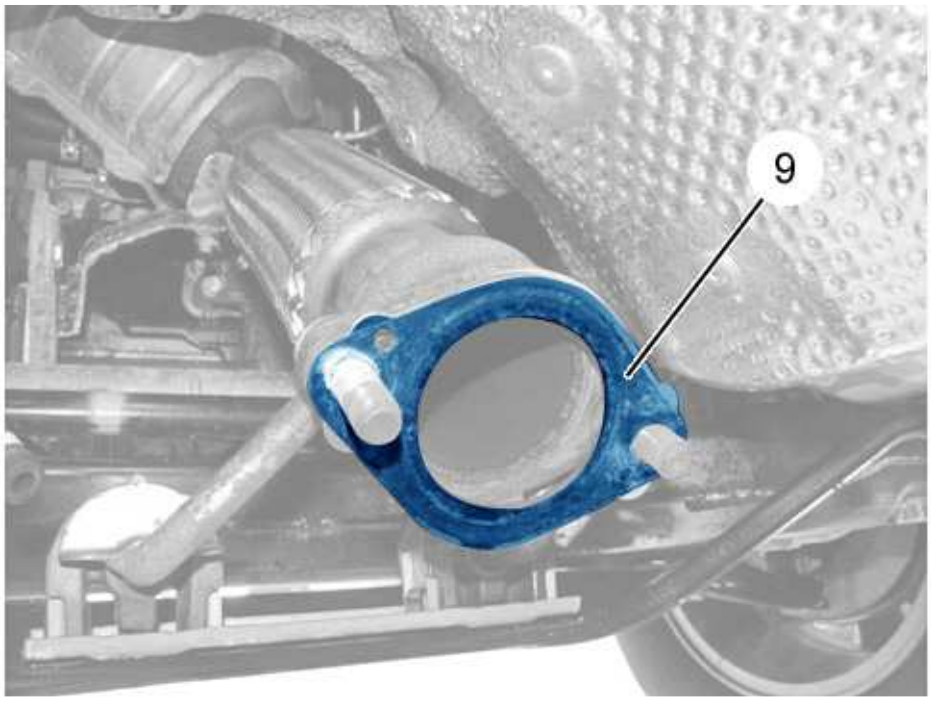

b1jg0n9d

WARNING : Always replace the seals (7), (9)

Refit :

- The intermediate exhaust line and particle filter assembly (8) ; Using the component lift
- The securing bolt (7)
- The nuts (6)
- The copper seal (4)
- The 3 bolts (3)

Couple up the hanger (5).

Remove the unit lifting jack.

Refit :

- The particle filter exhaust gas temperature sensor on the particle filter; (according to model)

- The pressure take-offs of the exhaust gas pressure sensor ; (according to model)

Start the engine.

Check that there are no leaks.

Return the vehicle to its wheels.

REMOVING - REFITTING : EXHAUST GAS PRESSURE SENSOR PRESSURE TAKE-OFF

ESSENTIAL : Observe the safety and cleanliness recommendations

ESSENTIAL : Observe the safety and cleanness recommendations relating to the particle emission filter

1 - REMOVAL

ESSENTIAL : With the engine hot : Wait at least an hour before any operation on the exhaust line

Place the vehicle on a lift.

Disconnect the battery.

Remove the air filter housing .

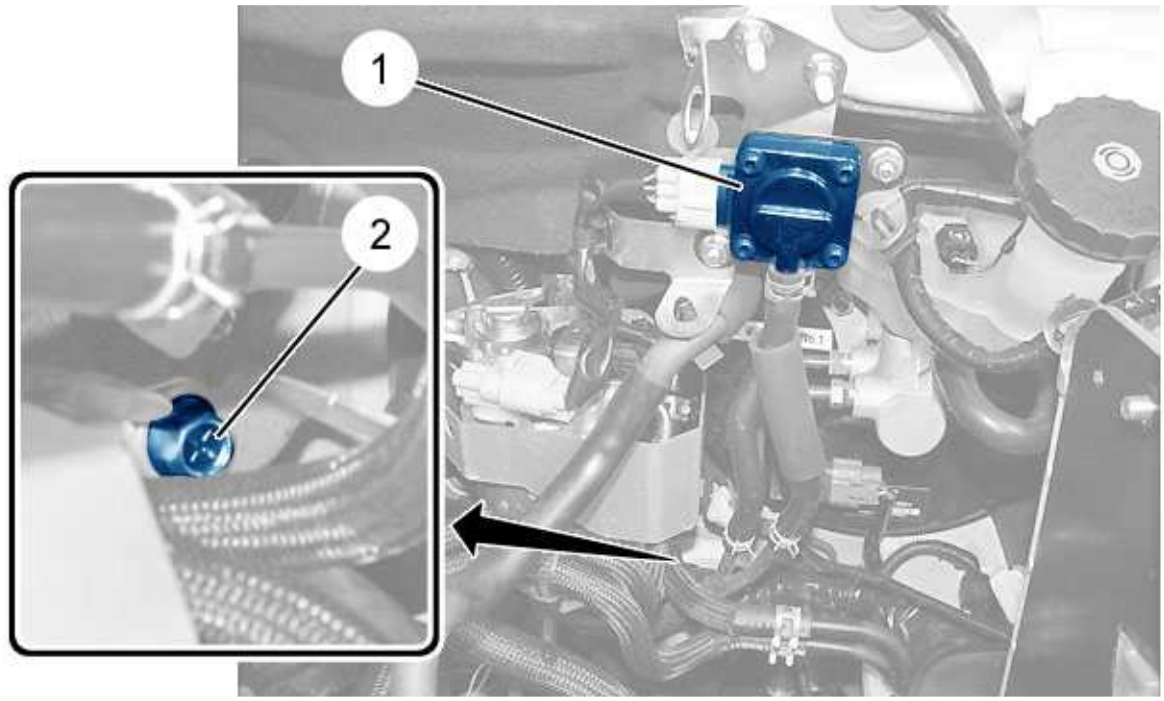

b1kg0fxd

Remove the exhaust gas pressure sensor (1).

Remove the bolt (2).

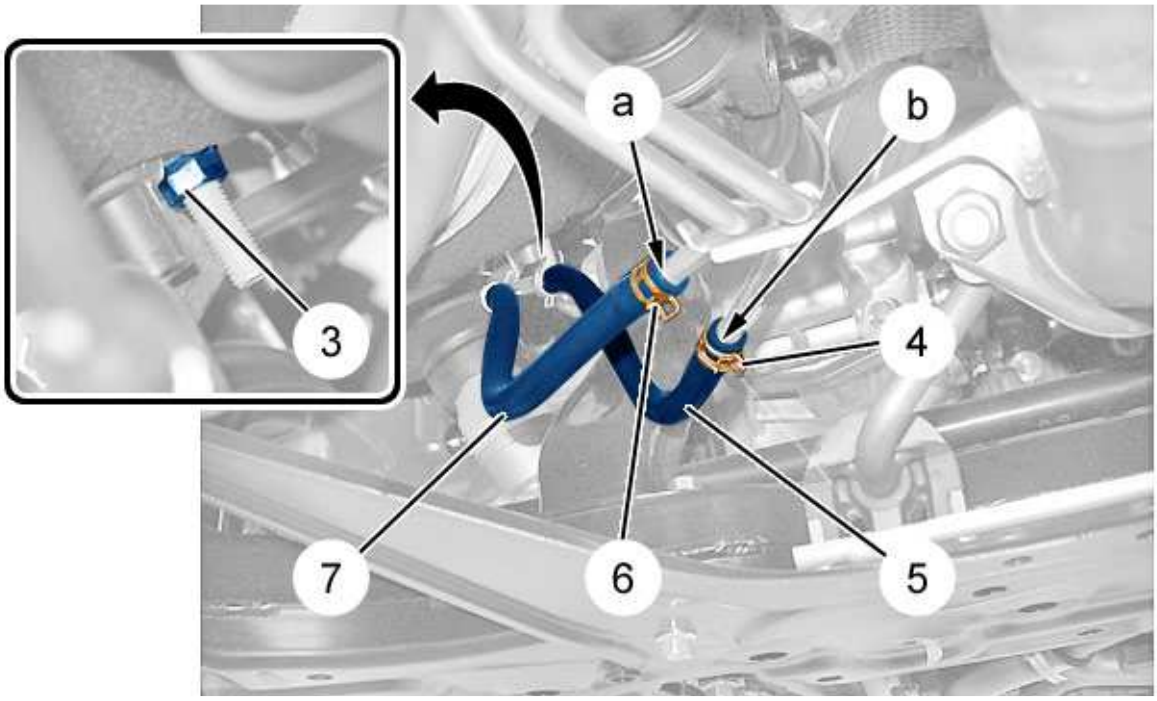

b1kg0fyd

From under the vehicle.

> **WARNING :** Mark the positioning of the hoses (5) and (7)

Push back the collar (4).

Push back the collar (6).

Uncouple :

- The pipe (7) (at "a")
- The pipe (5) (at "b")

Unscrew the nut (3) a few turns.

Remove the hoses (5), (7) and the pressure pipes (From above the vehicle).

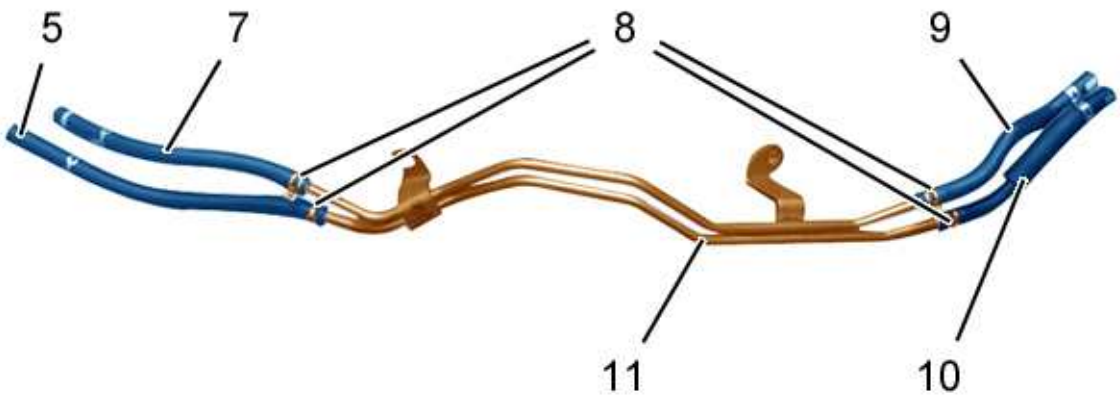

b1kg0fzd

WARNING : Mark the positioning of the hoses on the particle filter pressure take-off pipes (11)

Push back the clips (8).

Disconnect the hoses (5), (7), (9) and (10).

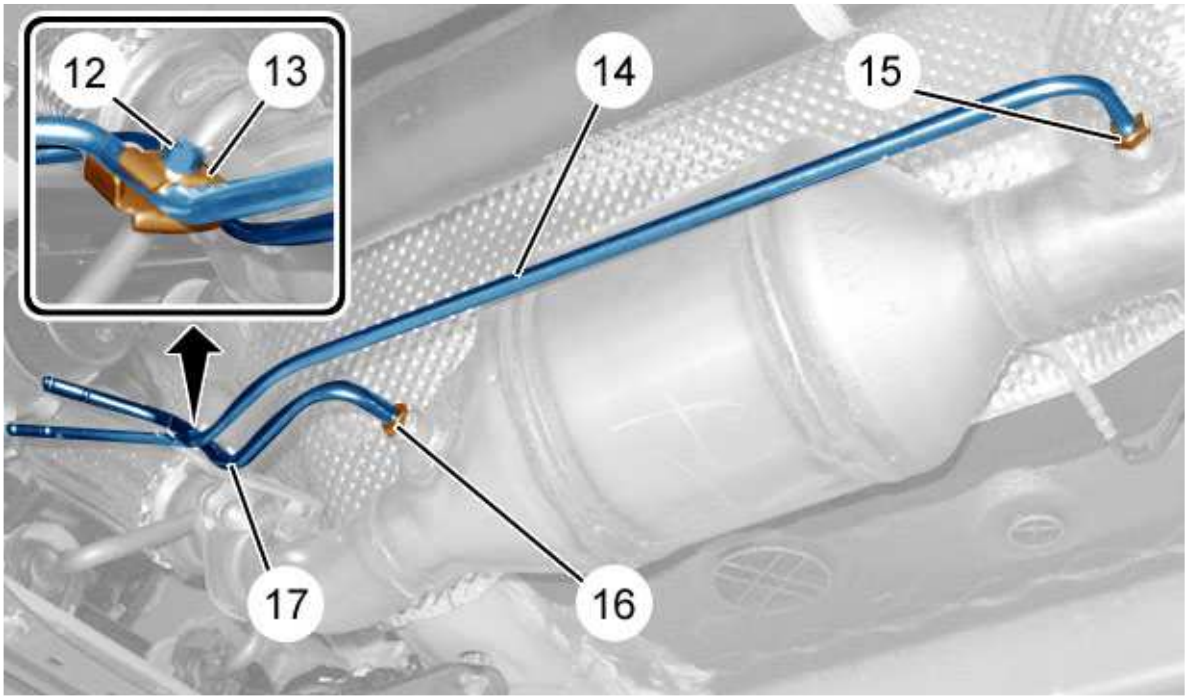

b1kg0g0d

Unscrew :

- The pipe (15)
- The pipe (16)

Remove :

- The bolt (12)
- The bracket (13)
- The downstream pressure take-off pipe (14)
- The upstream pressure take-off pipe (17)

2 - REFITTING

> **WARNING : Adhere to the tightening torques**

Refit (tighten by hand) :

- The upstream pressure take-off pipe (17)
- The downstream pressure take-off pipe (14)

Couple up :

- The pipe (15)
- The pipe (16)

Refit :

- Retaining clamp (13)
- The bolt (12) (tighten by hand)

Tighten to the specified torque :

- The pipe (15)
- The pipe (16)
- The bolt (12)

Connect the hoses (5), (7), (9), (10) on the particle filter pressure take-off pipes (11).

Position :

- The clips (8)
- The assembly of hoses (5), (7) and pressure pipes (11) (From above the vehicle)

Tighten the nut (3).

Tighten the bolt (2).

Connect the hose (5) (at "b").

Connect the hose (7) (at "a").

Reposition the clips (4), (6).

Refit the exhaust gas pressure sensor (1).

Refit the air filter housing .

> **WARNING :** Perform the operations to be carried out following reconnection of the battery

Reconnect the battery.

DISMANTLING - RE-ASSEMBLY : EXHAUST GAS PRESSURE SENSOR

ESSENTIAL : Observe the safety and cleanliness recommendations

1 - LOCATION

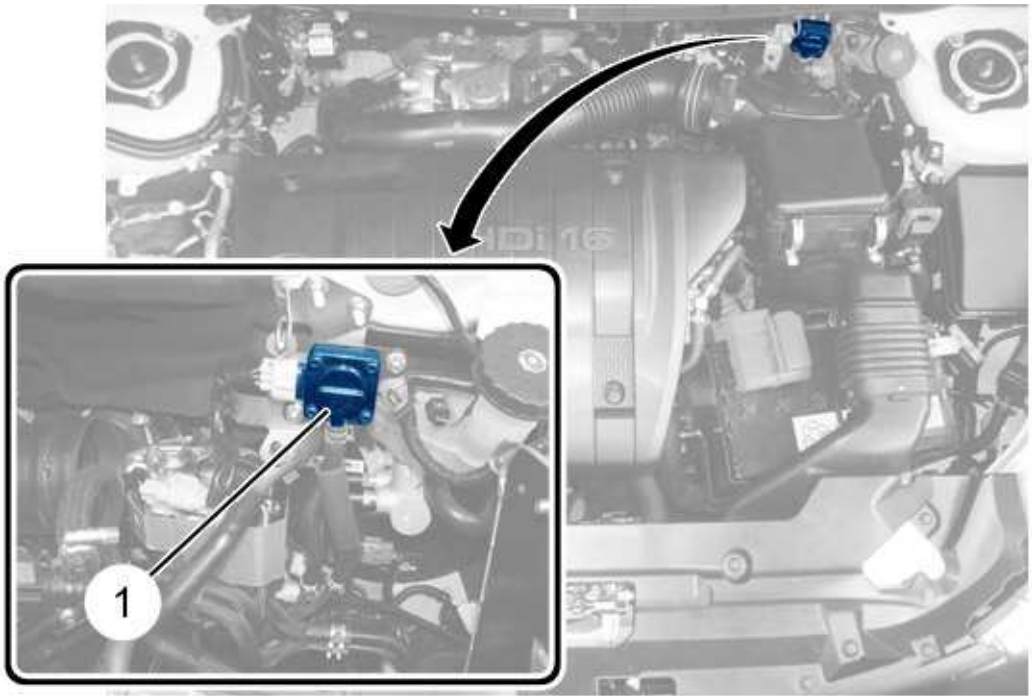

b1kg0fpd

(1) Exhaust gas pressure sensor.

2 - REMOVING

Disconnect the battery.

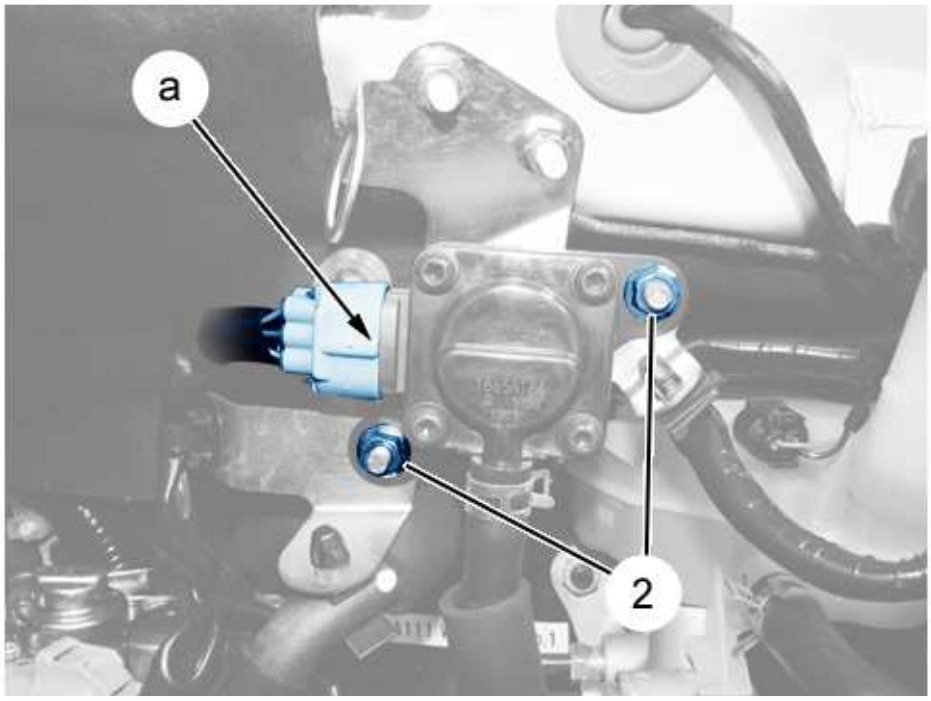

b1kg0fqd

Disconnect the connector (as "a").

Remove the nuts (2).

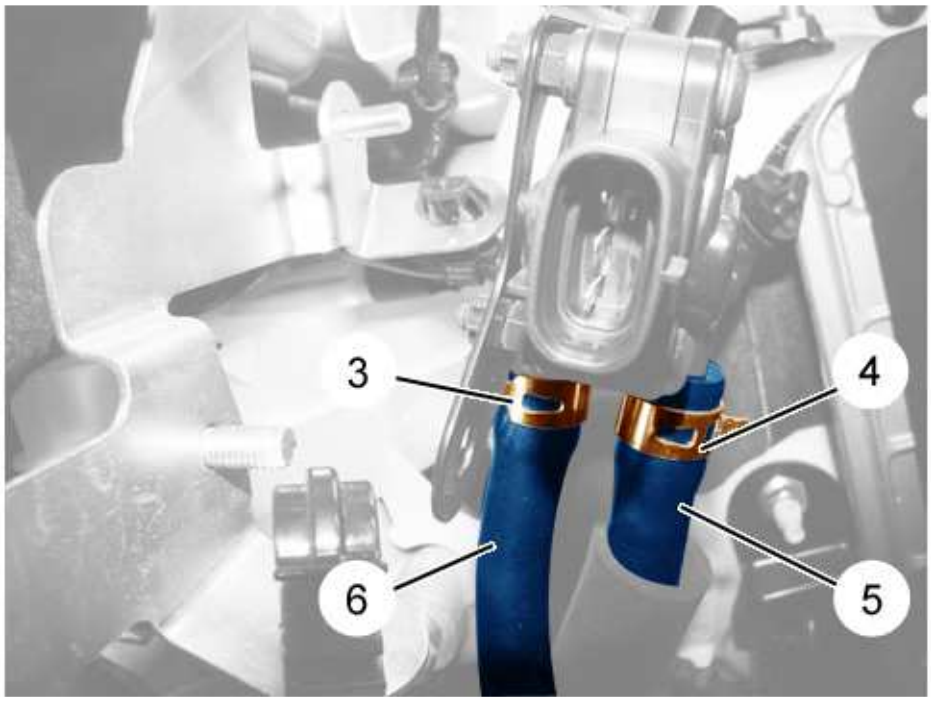

b1kg0frd

WARNING : Mark the location of the pipes (5); (6) on the exhaust gas pressure sensor

(1)

Push back :

- The clip (3)
- The clip (4)

Uncouple :

- The tube (5)
- The tube (6)

Remove the exhaust gas pressure sensor (1) (With its mounting).

3 - REFITTING

WARNING : Adhere to the tightening torques

Refit the exhaust gas pressure sensor (1) (With its mounting).

Couple up :

- The tube (6)
- The tube (5)

Position :

- The clip (4)
- The clip (3)

Fit the nuts (2).

Connect the connector (as "a").

WARNING : Perform the operations to be carried out following reconnection of the battery

Reconnect the battery.

Deletion of fault codes.

Perform a forced regeneration of the particle filter.

TIGHTENING TORQUES : 4N13 ENGINES (EURO 5)

1 - CYLINDER HEAD

1 - 1 - Tightening torques

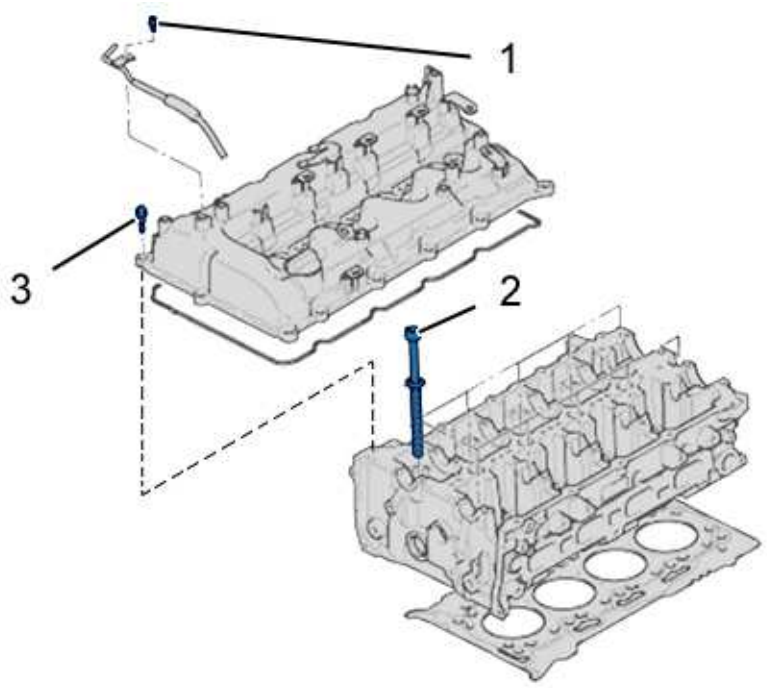

b1bb1fzd

Referenc	Designation	Stage	Tightening torque
(1)	bolts (Vacuum pipe support)	Tightening	1,1 daNm
(2)	bolts (Cylinder head) (*) (**)	Pre-tighten	5 daNm
		1st angular tightening	90°
		2nd angular tightening	90°
		Slackening	-
		Pre-tighten	5 daNm
		1st angular tightening	90°
		2nd angular tightening	90°
		3rd angular tightening	90°
(3)	bolts (Cylinder head cover) (*)	Pre-tighten	0,3 daNm
		Tightening	0,55 daNm
(*) Follow the tightening sequence			
(**) Always to be replaced whenever removed			

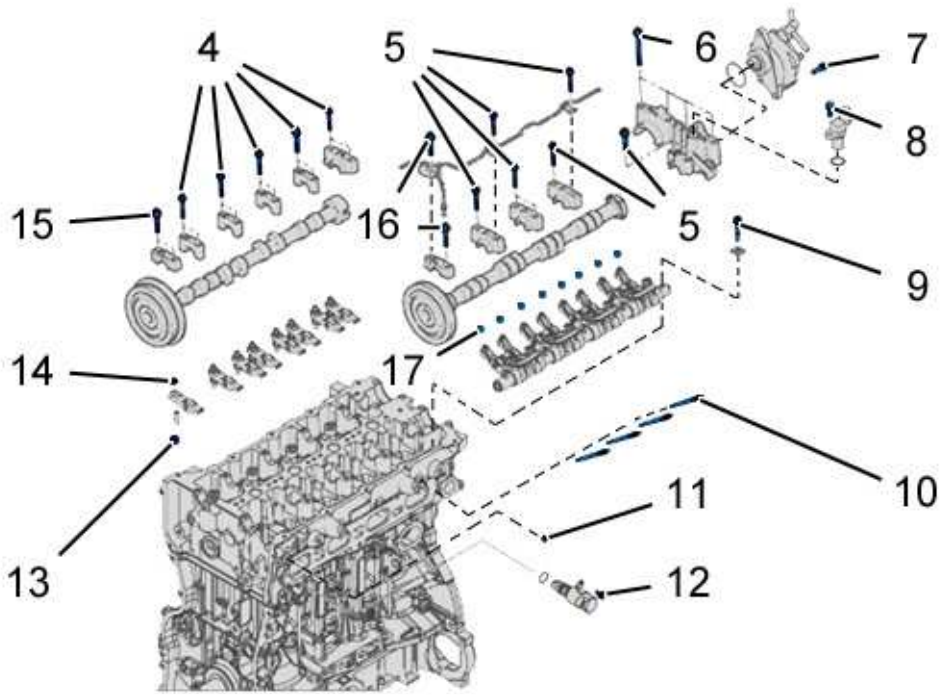

b1bb1g0d

Referen	Designation	Stage	Tightening torque
(4)	bolts (Exhaust camshaft main bearing caps) (*)	Pre-tighten	0,5 daNm
		Tightening	1,1 daNm
(5)	bolts (Inlet camshaft main bearing caps) (*)	Pre-tighten	0,5 daNm
		Tightening	1,1 daNm
(6)	bolts (Double camshaft bearing cap) (*)	Pre-tighten	0,5 daNm
		Tightening	1,1 daNm
		Tightening	2 daNm
(7)	bolts (Vacuum pump)	Tightening	2,6 daNm
(8)	bolts (Camshaft position sensor)	Tightening	1 daNm
(9)	bolts (Variable lift rail)	Tightening	3,1 daNm
(10)	Pre-heat glow plugs	Tightening	1,8 daNm
(11)	Plug	Tightening	1 daNm
(12)	bolts (Variable lift solenoid valve)	Tightening	1 daNm
(13)	Well caps on cylinder head	Tightening	1,8 daNm
(14)	Nuts (Exhaust rockers adjustment)	Tightening	1 daNm
(15)	bolts (Exhaust camshaft main bearing caps) (*)	Pre-tighten	0,5 daNm
		Tightening	1,1 daNm
		Tightening	2 daNm
(16)	bolts (Inlet camshaft main bearing caps) (*)	Pre-tighten	0,5 daNm
		Tightening	1,1 daNm
		Tightening	2 daNm
(17)	Nuts (Inlet rockers adjustment)	Tightening	0,9 daNm
(*) Follow the tightening sequence			

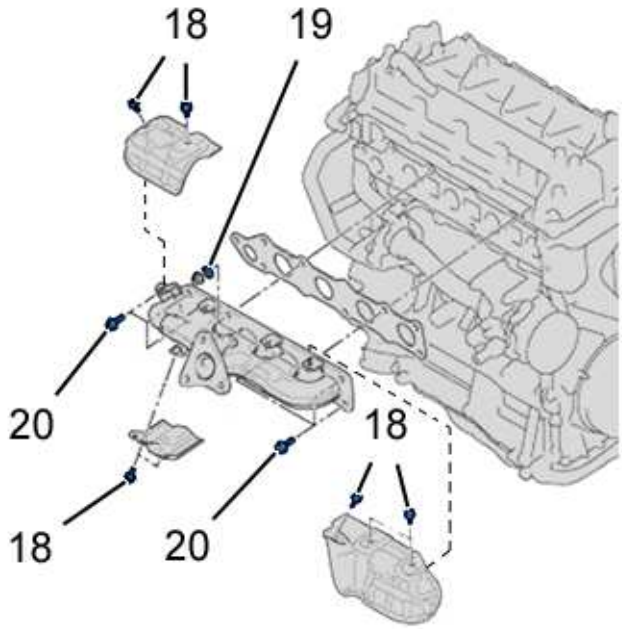

b1bb1g1d

Referen	Designation	Stage	Tightening torque
(18)	bolts (Exhaust manifold heat shields)	Tightening	1,1 daNm
(19)	Nuts (Exhaust manifold)	Tightening	6,2 daNm
(20)	bolts (Exhaust manifold)	Tightening	6,2 daNm

1 - 2 - Sequence of tightening the bolts (2)

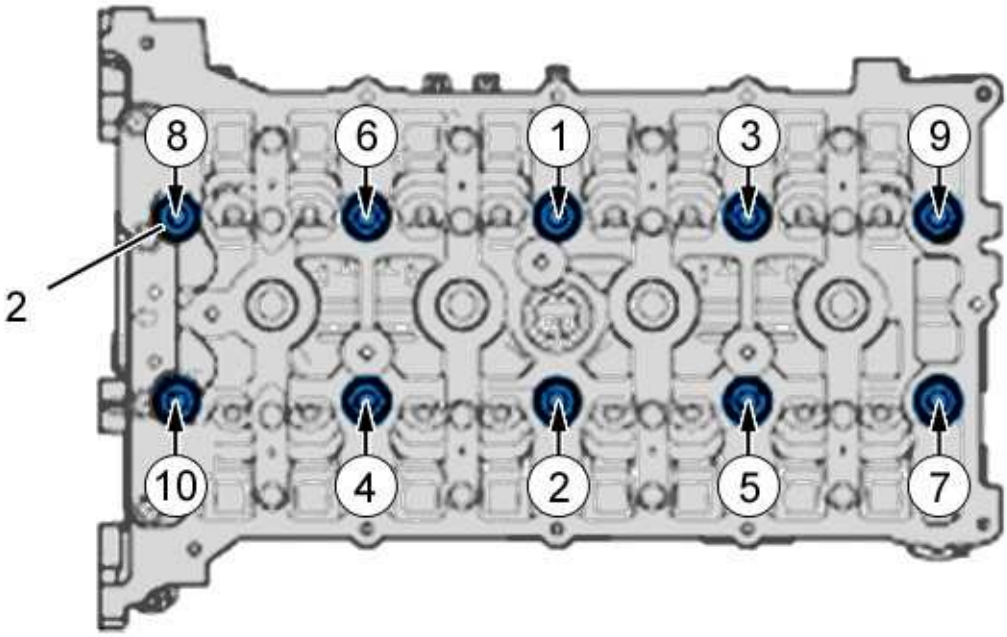

b1bb1g2d

WARNING : Follow the tightening sequence

Tightening procedure :

- Pre-tightening of the 10 bolts (2) to 5 m.daN (from 1 to 10)
- 1st angular tightening of the 10 bolts (2) to 90° (from 1 to 10)
- 2nd angular tightening of the 10 bolts (2) to 90° (from 1 to 10)
- Slackening of the 10 bolts (2)
- Pre-tightening of the 10 bolts (2) to 5 m.daN (from 1 to 10)
- 1st angular tightening of the 10 bolts (2) to 90° (from 1 to 10)
- 2nd angular tightening of the 10 bolts (2) to 90° (from 1 to 10)
- 3rd angular tightening of the 10 bolts (2) to 90° (from 1 to 10)

1 - 3 - Sequence of tightening the bolts (3)

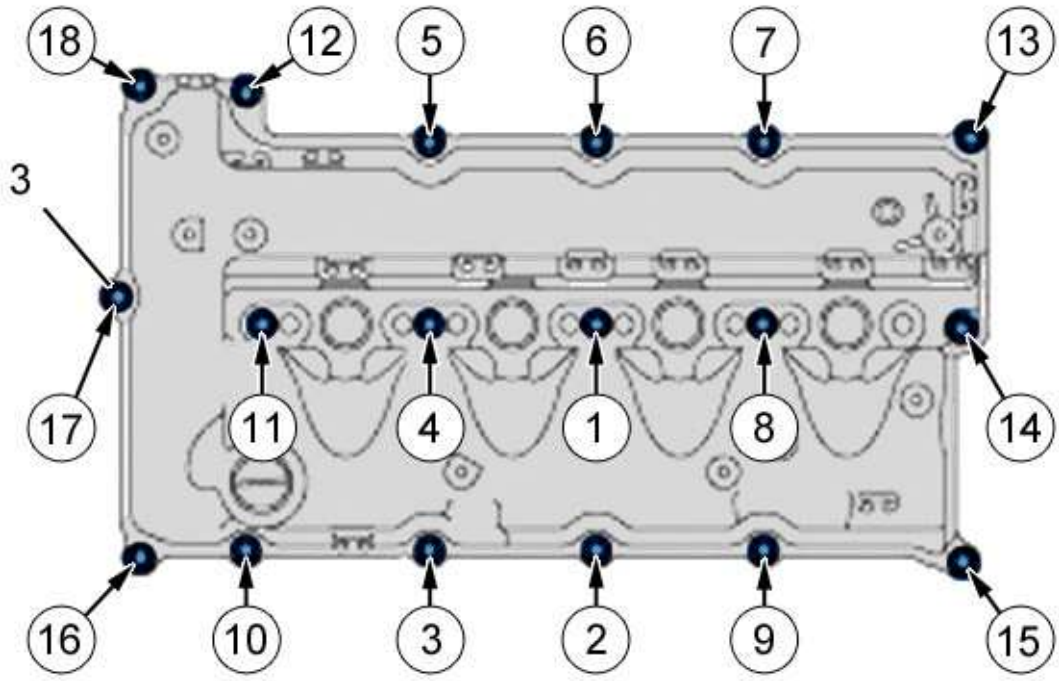

b1bb1g3d

WARNING : Follow the tightening sequence

Tightening procedure :

- Pre-tightening of the 18 bolts (3) to 0,3 m.daN (from 1 to 18)
- Tightening of the 18 bolts (3) to 0,55 m.daN (from 1 to 18)

1 - 4 - Sequence of tightening the bolts (5), (6)

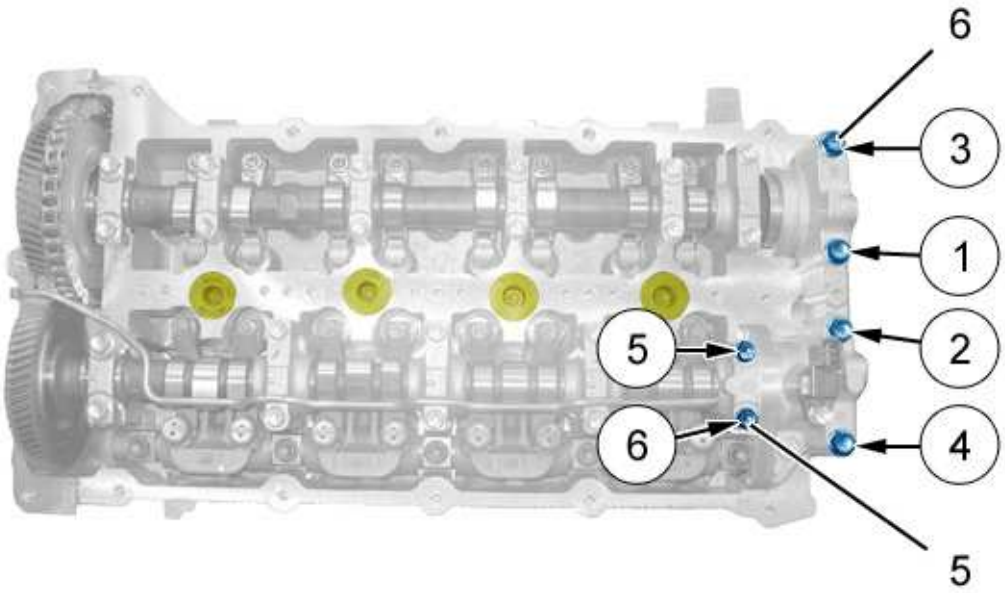

b1bb1j1d

(5) bolts (Inlet camshaft main bearing caps) (bolts M6).

(6) bolts (Double camshaft bearing cap) (bolts M8).

> **WARNING :** Follow the tightening sequence

Tightening procedure :

- Pre-tightening of the 4 bolts (6) to 0,5 m.daN (from 1 to 4)
- Pre-tightening of the 2 bolts (5) to 0,5 m.daN (from 5 to 6)
- Tightening of the 4 bolts (6) to 1,1 m.daN (from 1 to 4)
- Tightening of the 2 bolts (5) to 1,1 m.daN (from 5 to 6)
- Tightening of the 4 bolts (6) to 2 m.daN (from 1 to 4)

1 - 5 - Sequence of tightening the bolts (4), (5), (15), (16)

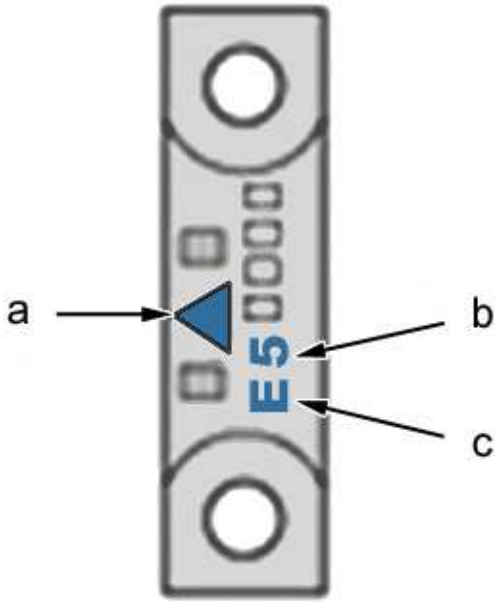

b1bb1g4d

Camshaft bearing caps.

"a" Orientation of the bearing caps (Timing chain side).

"b" Fitting position of the main bearing caps .

"c" Identification of the bearing caps.

> **WARNING :** The camshaft bearing caps are marked (at "a") for the orientation (at "b") for the position, and (at "c") for identification of the bearing -(E) for the exhaust -(I) for the inlet

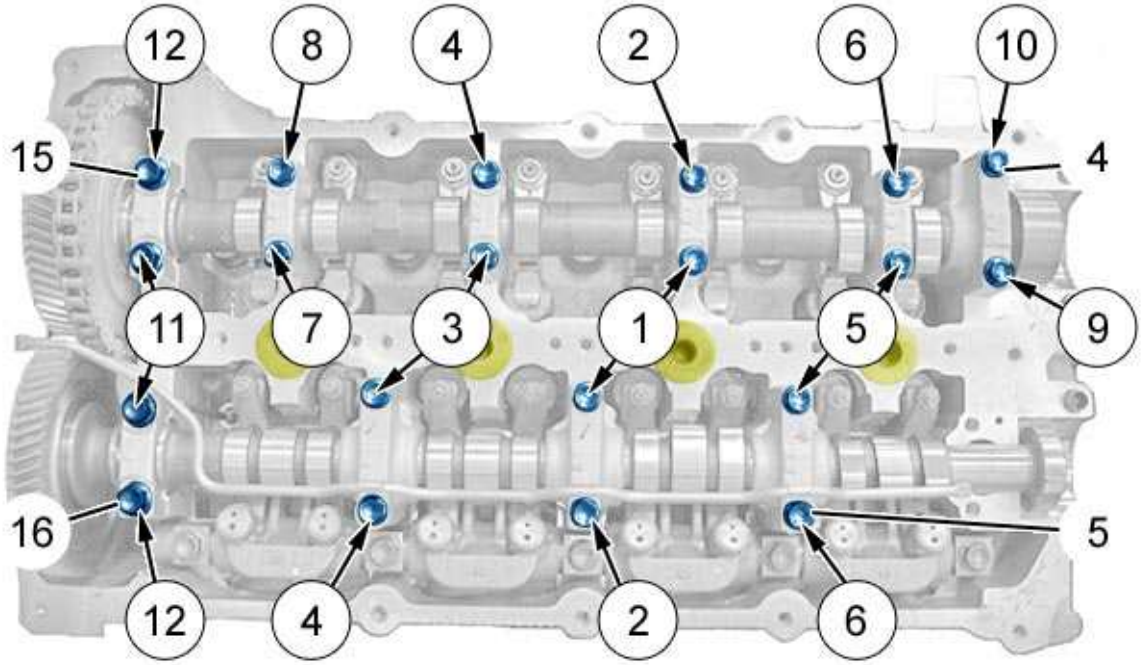

b1bb1j2d

(4), (5) bolts (Camshaft bearing caps) (bolts M6).

(15), (16) bolts (Camshaft bearing caps) (bolts M8).

> **WARNING :** Follow the tightening sequence

Tightening procedure :

- Pre-tightening of the 16 bolts (4), (5) to 0,5 m.daN (from 1 to 10)
- Pre-tightening of the 4 bolts (15), (16) to 0,5 m.daN (from 11 to 12)
- Tightening of the 16 bolts (4), (5) to 1,1 m.daN (from 1 to 10)
- Tightening of the 4 bolts (15), (16) to 1,1 m.daN (from 11 to 12)
- Tightening of the 4 bolts (15), (16) to 2 m.daN (from 11 to 12)

2 - CYLINDER BLOCK

2 - 1 - Tightening torques

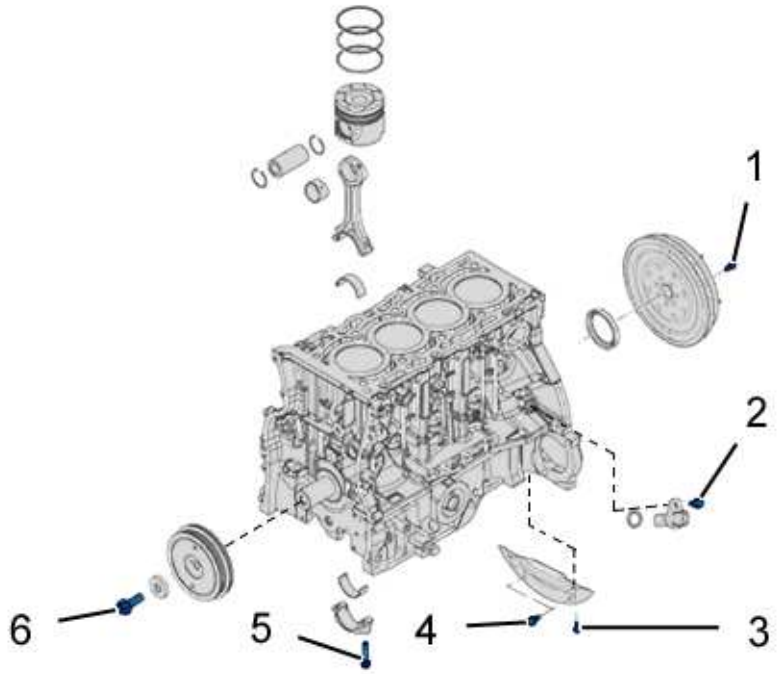

b1bb1g6d

Referenc	Designation	Stage	Tightening torque
(1)	bolts (Engine flywheel) (*)	Pre-tighten	4 daNm
		Angular tightening	30°
(2)	bolts (Engine speed sensor)	Tightening	0,95 daNm
(3)	bolts (Protection shield / Cylinder block)	Tightening	1,1 daNm
(4)	bolts (Protection shield / Gearbox)	Tightening	4,8 daNm
(5)	bolts (Conrods) (**)	Pre-tighten	0,5 daNm
		Tightening	2 daNm
		Angular tightening	90°
(6)	bolts (Accessories drive pulley)	Pre-tighten	25 daNm
		Slackening	-
		Pre-tighten	11 daNm
		Angular tightening	60°
(*) Follow the tightening sequence			
(**) Always to be replaced whenever removed			

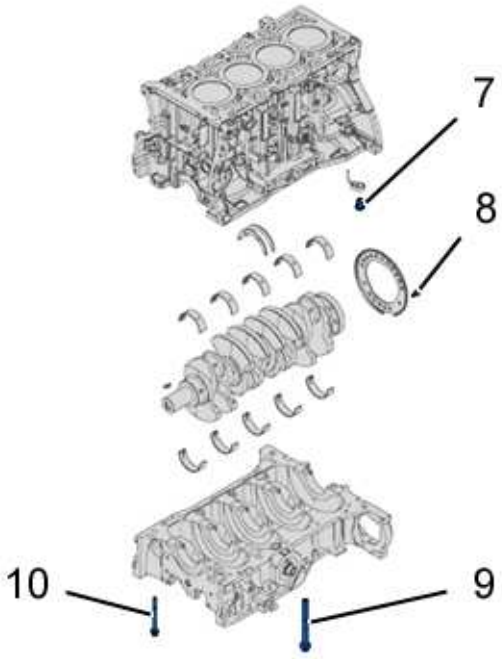

b1bb1g7d

Referenc	Designation	Stage	Tightening torque
(7)	bolts (Piston skirt spray jet)	Tightening	3,2 daNm
(8)	bolts (Engine speed sensor target) (*)	Tightening	1,1 daNm
(9)	bolts (Crankshaft main bearing cap casing) (*) (**)	Pre-tighten	6,5 daNm
		Angular tightening	122°
(10)	bolts (Crankshaft main bearing cap casing) (*)	Tightening	2,6 daNm
(*) Follow the tightening sequence			
(**) Always to be replaced whenever removed			

2 - 2 - Sequence of tightening the bolts (1)

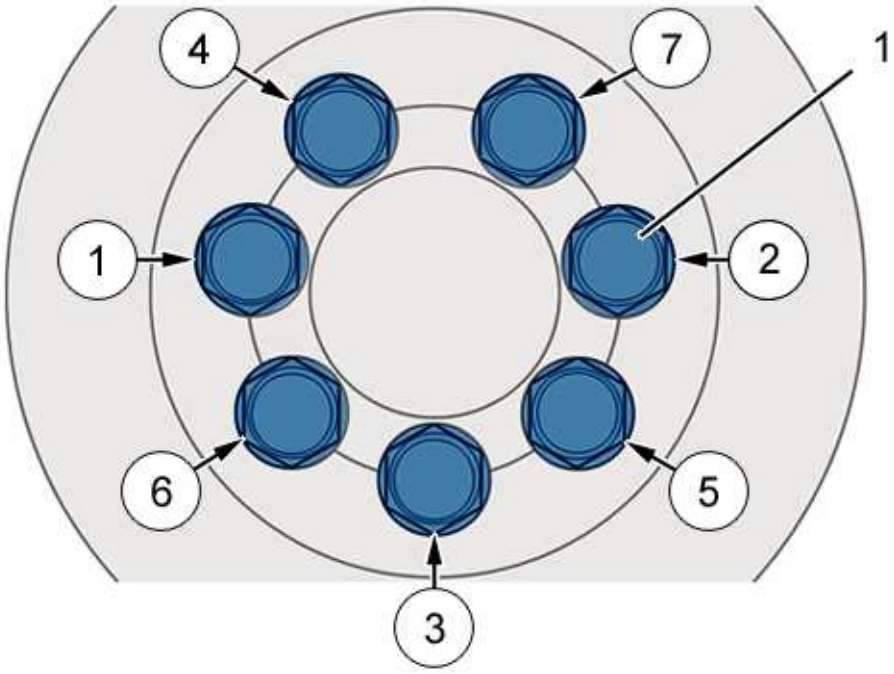

b1bb1g8d

WARNING : Follow the tightening sequence

Tightening procedure :

- Pre-tightening of the 7 bolts (1) to 4 m.daN (from 1 to 7)
- Angular tightening of the 7 bolts (1) to 30° (from 1 to 7)

2 - 3 - Sequence of tightening the bolts (8)

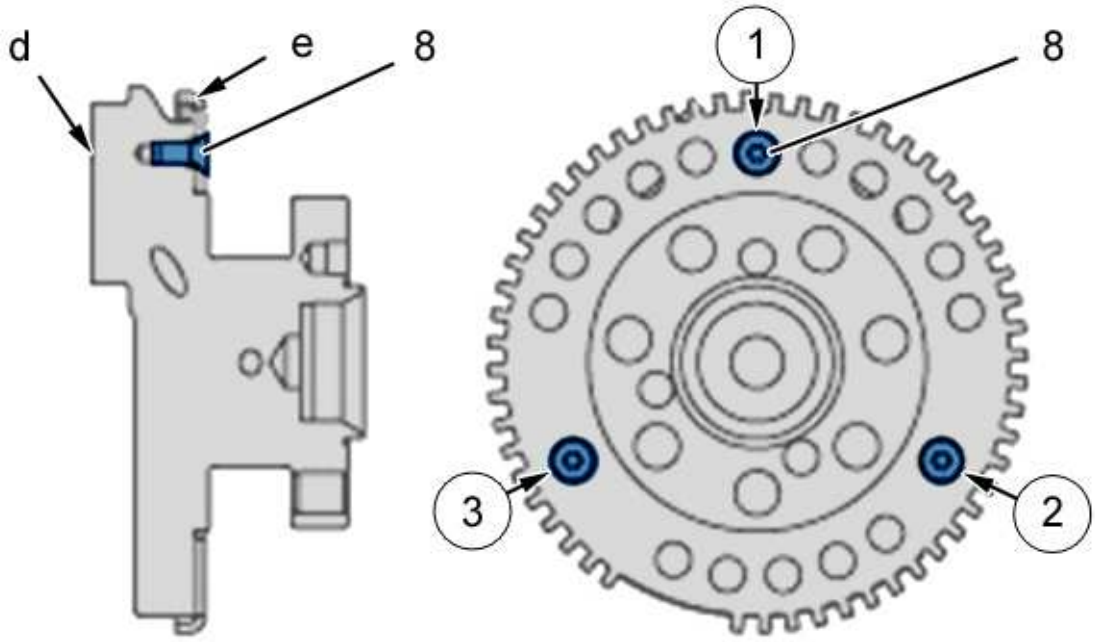

b1bb1j3d

WARNING : Place the crank pin of cylinder n°1 at top dead centre (as shown in the diagram above) (at "d")

WARNING : Direct the notches of the engine speed target (8) towards the crank pin of cylinder n° 1 (as shown in the diagram above) (at "e")

WARNING : Follow the tightening sequence

Tightening of the 3 bolts (8) to 1,1 m.daN (from 1 to 3).

2 - 4 - Sequence of tightening the bolts (9), (10)

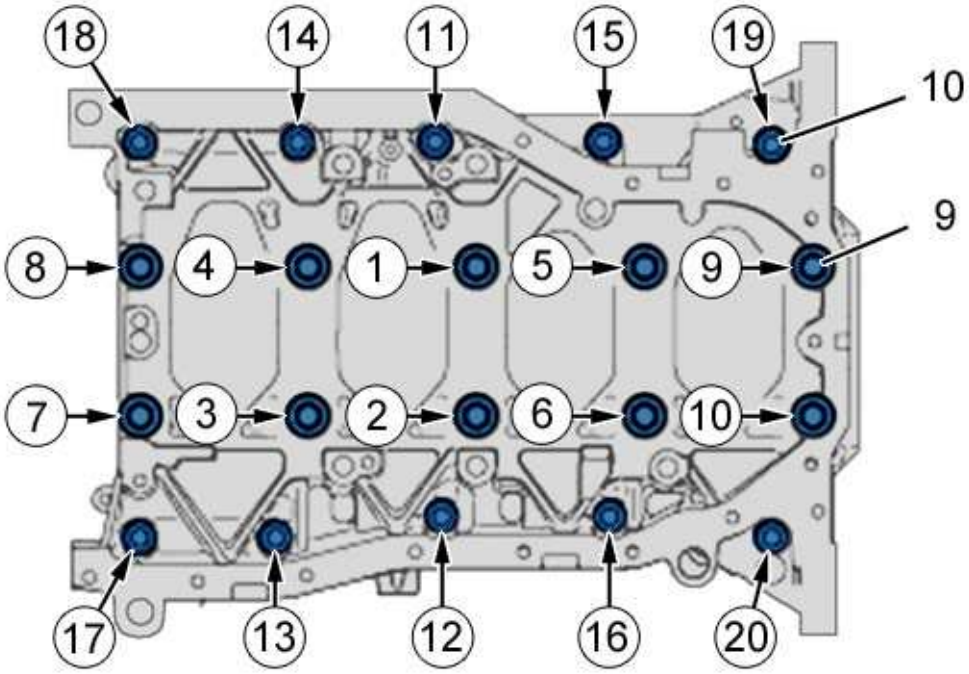

b1bb1gad

(9) bolts (Crankshaft main bearing cap casing) (screws M11).

(10) bolts (Crankshaft main bearing cap casing) (screws M8).

> **WARNING :** Follow the tightening sequence

Tightening procedure :

- Pre-tightening of the 10 bolts (9) to 6,5 m.daN (from 1 to 10)
- Angular tightening of the 10 bolts (9) to 122° (from 1 to 10)
- Tightening of the 10 bolts (10) to 2,6 m.daN (from 11 to 20)

3 - LUBRICATION

3 - 1 - Tightening torques

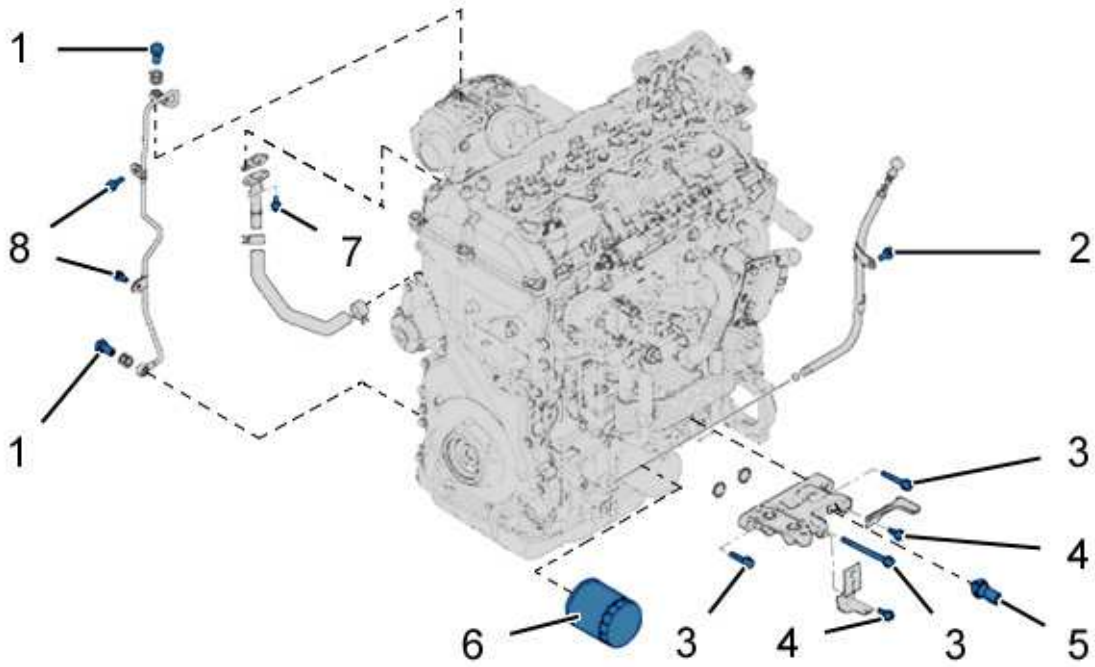

b1bb1gbd

Referenc	Designation	Stage	Tightening torque
(1)	bolts (Turbocharger lubricating pipe)	Tightening	1,5 daNm
(2)	bolts (dipstick)	Tightening	1,1 daNm
(3)	bolts (EGR heat exchanger support)	Tightening	2,8 daNm
(4)	bolts (Electrical harness mounting)	Tightening	1,1 daNm
(5)	Oil pressure switch	Tightening	1,9 daNm
(6)	Oil filter	Tightening	1,4 daNm
(7)	bolts (Turbocharger lubrication return pipe)	Tightening	0,95 daNm
(8)	bolts (Turbocharger lubricating pipe)	Tightening	0,95 daNm

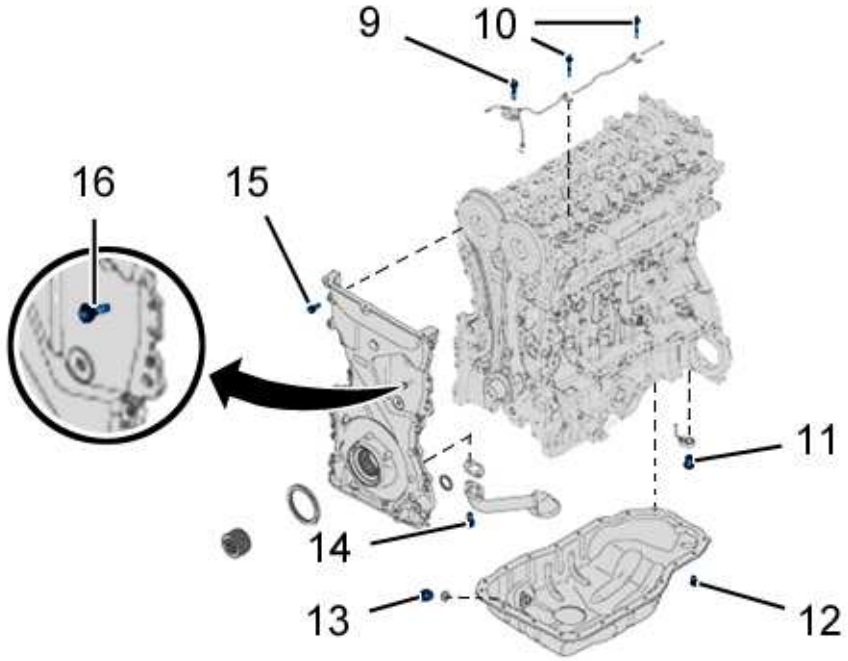

b1bb1gcd

Referenc	Designation	Stage	Tightening torque
(9)	bolts (Timing chain lubrication tube)	Tightening	2 daNm
(10)	bolts (Timing chain lubrication tube)	Tightening	1,1 daNm
(11)	bolts (Piston skirt spray jet)	Tightening	3,2 daNm
(12)	bolts (Oil sump) (*)	Tightening	1,1 daNm
(13)	Drain cap	Tightening	4 daNm
(14)	bolts (Oil suction strainer)	Tightening	1,8 daNm
(15)	bolts (Timing cover) (*)	Tightening	1,1 daNm
(16)	bolts (Timing cover) (*)	Tightening	1,1 daNm
(*) Follow the tightening sequence			

3 - 2 - Sequence of tightening the bolts (12)

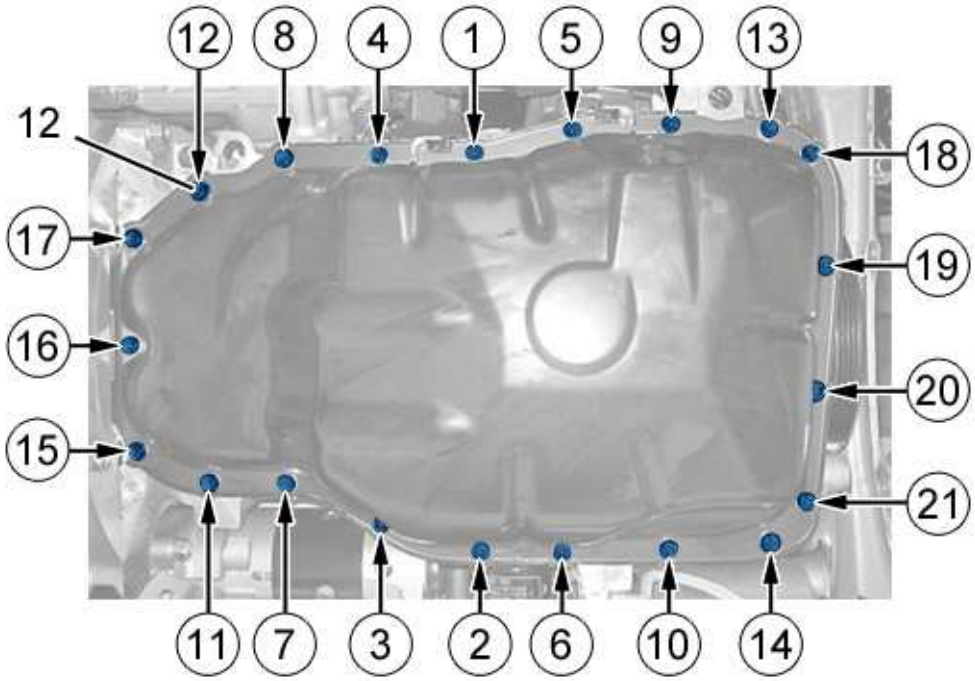

b1bb1gdd

WARNING : Follow the tightening sequence

Tightening of the 21 bolts (12) to 1,1 m.daN (from 1 to 21).

3 - 3 - Sequence of tightening the bolts (15), (16)

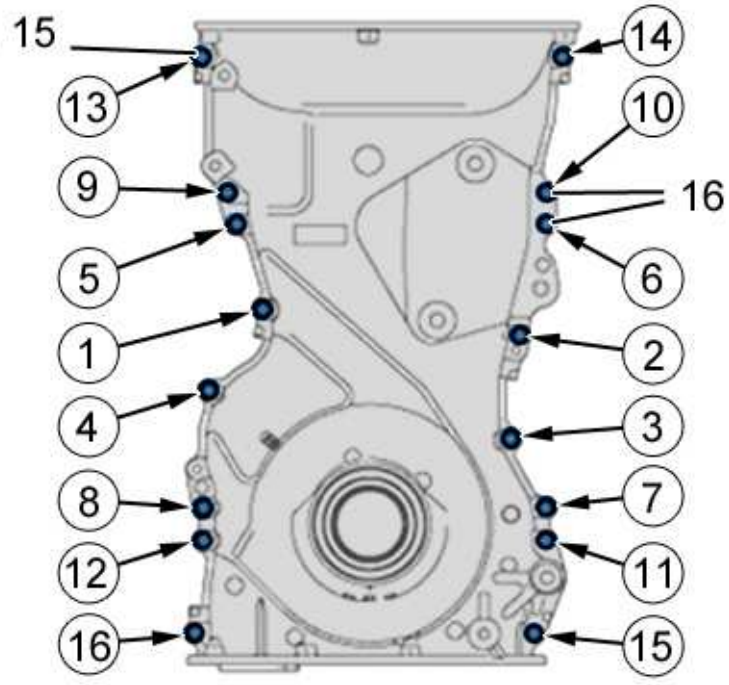

b1bb1ged

(15) bolts (Timing cover) (screws M6x20).

(16) bolts (Timing cover) (screws M6x16).

> **WARNING :** Follow the tightening sequence

Tightening procedure :

- Tightening of the 5 bolts (15) to 1,1 m.daN (from 1 to 5)
- Tightening of the bolt (16) to 1,1 daN.m (De 6)
- Tightening of the 3 bolts (15) to 1,1 m.daN (from 7 to 9)
- Tightening of the bolt (16) to 1,1 daN.m (De 10)
- Tightening of the 6 bolts (15) to 1,1 m.daN (from 11 to 16)

4 - TIMING GEAR

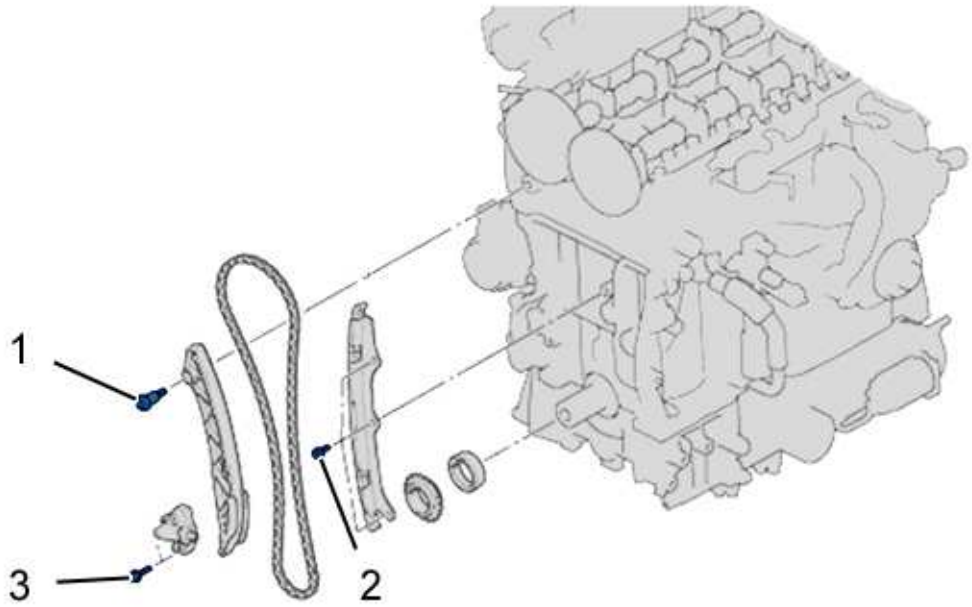

b1bb1gfd

Referenc	Designation	Stage	Tightening torque
(1)	bolts (Tensioner pad)	Tightening	2,3 daNm
(2)	bolts (Fixed plate)	Tightening	1,1 daNm
(3)	bolts (Hydraulic tensioner)	Tightening	1,1 daNm

5 - TURBOCHARGING CIRCUIT

5 - 1 - Tightening torques

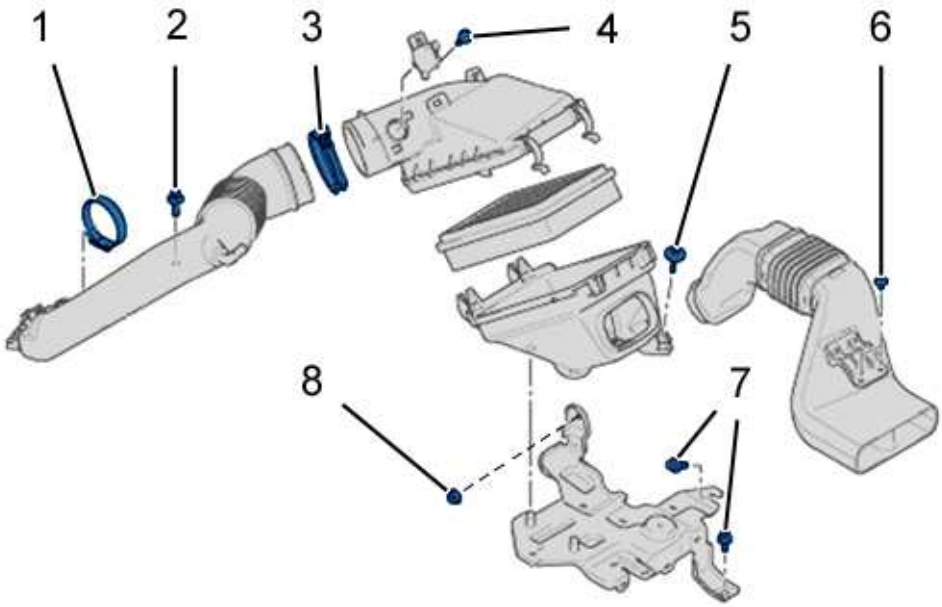

b1bb1ggd

Referenc	Designation	Stage	Tightening torque
(1)	Clip (Turbocharger inlet)	Tightening	0,4 daNm
(2)	bolts (Turbocharger air inlet pipe)	Tightening	1 daNm
(3)	Clip	Tightening	0,4 daNm
(4)	bolts (Air flow sensor)	Tightening	0,1 daNm
(5)	bolts (Air filter unit)	Tightening	0,7 daNm
(6)	Clip	Tightening	-
(7)	bolts (Air filter unit mounting)	Tightening	0,95 daNm
(8)	Nut (Air filter unit mounting)	Tightening	1,1 daNm

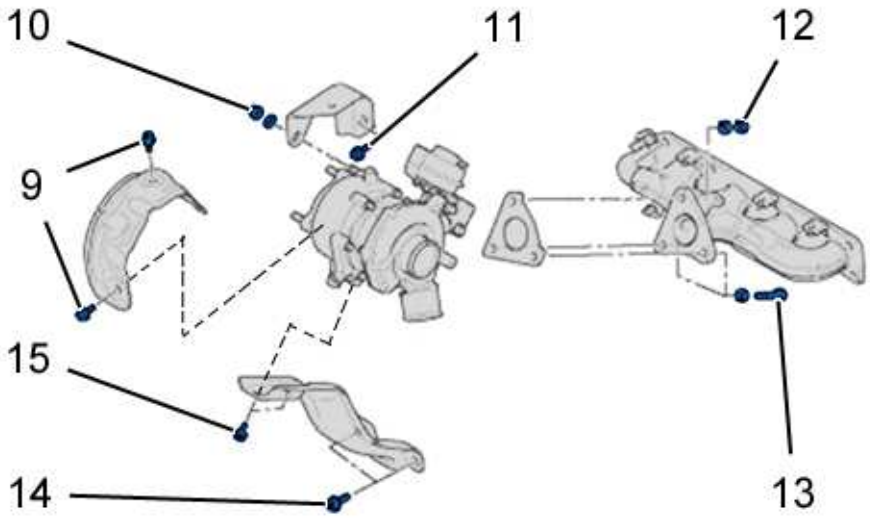

b1bb1ghd

Referenc	Designation	Stage	Tightening torque
(9)	bolts (Turbocharger heat shield)	Tightening	1,1 daNm
(10)	Nut (Turbocharger upper bracket)	Tightening	5,9 daNm
(11)	bolts (Turbocharger upper bracket / Cylinder head)	Tightening	2,3 daNm
(12)	Nut (Turbocharger)	Tightening	5,9 daNm
(13)	bolts (Turbocharger)	Tightening	5,9 daNm
(14)	bolts (Turbocharger lower support / Cylinder block)	Tightening	4,7 daNm
(15)	bolts (Turbocharger lower support)	Tightening	2,4 daNm

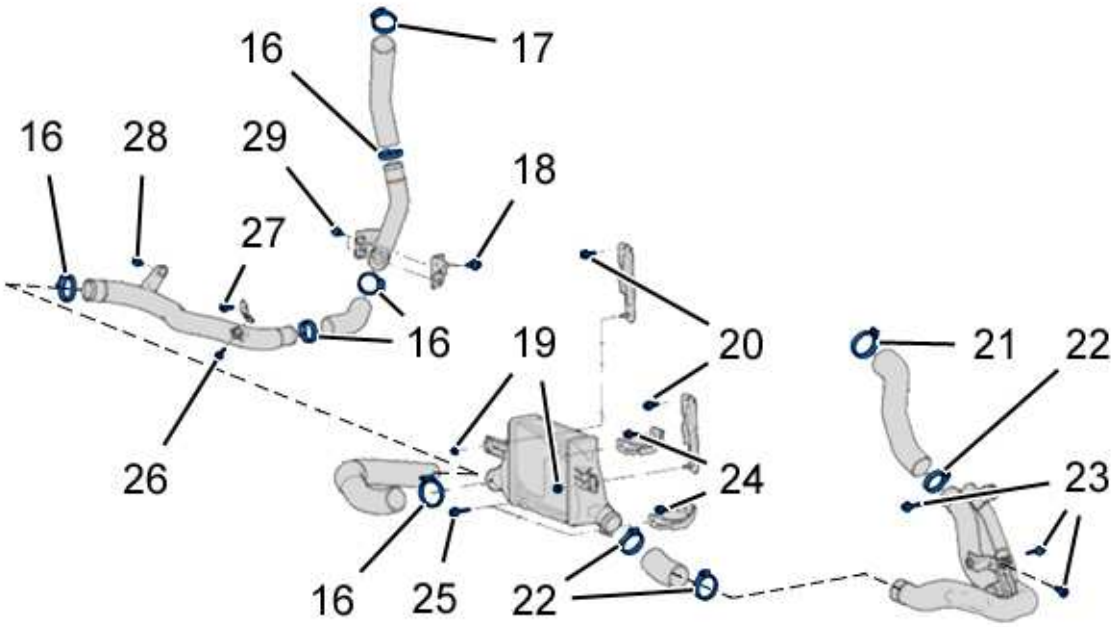

b1bb1gid

Referenc	Designation	Stage	Tightening torque
(16)	Clip	Tightening	0,7 daNm
(17)	Clip (Turbocharger outlet rigid tube)	Tightening	0,7 daNm
(18)	bolts (Air pipe support / Cylinder block)	Tightening	2,1 daNm
(19)	Nut (Upper bracket / Turbocharger air cooler)	Tightening	0,95 daNm
(20)	bolts (Upper bracket / Front bumper frame)	Tightening	1,8 daNm
(21)	Clip (Air mixer unit inlet pipe)	Tightening	0,6 daNm
(22)	Clip	Tightening	0,6 daNm
(23)	bolts (Air pipe / Chassis)	Tightening	0,95 daNm
(24)	bolts (Lower support / Front cross member)	Tightening	1,8 daNm
(25)	bolts (Lower support / Turbocharger air cooler)	Tightening	0,95 daNm
(26)	bolts (Air pipe / Bracket)	Tightening	2,1 daNm
(27)	bolts (Air pipe support / Cylinder block)	Tightening	0,95 daNm
(28)	bolts (Air pipe / Timing covers)	Tightening	0,95 daNm
(29)	bolts (Air pipe / Bracket)	Tightening	0,95 daNm

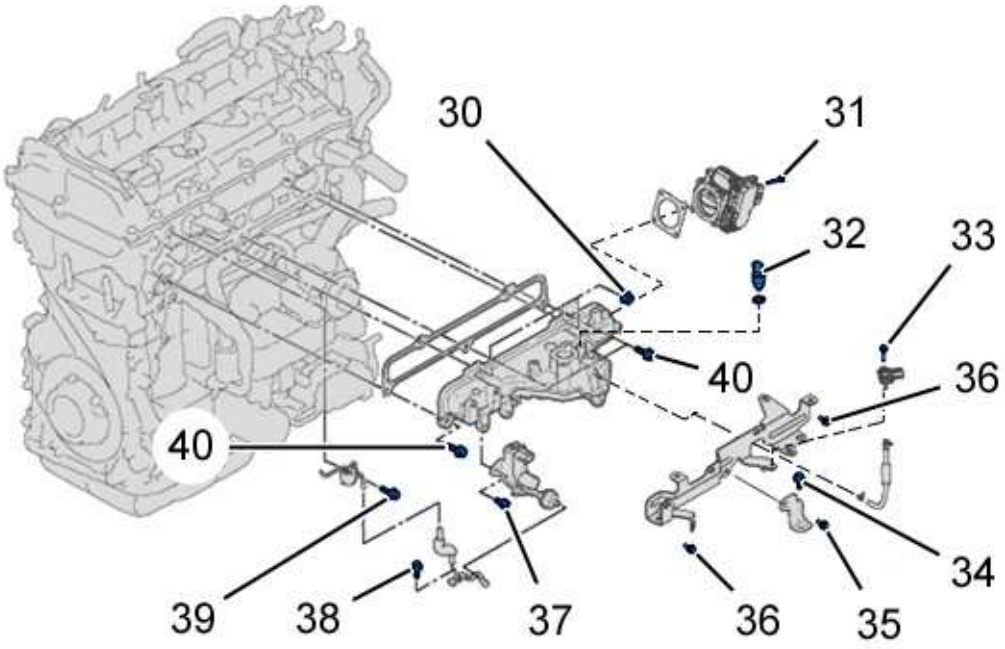

b1bb1gjd

Referenc	Designation	Stage	Tightening torque
(30)	Nut (Air inlet manifold) (*)	Tightening	2 daNm
(31)	bolts (Air metering unit)	Tightening	1,1 daNm
(32)	Inlet air temperature sensor	Tightening	1,4 daNm
(33)	bolts (Supercharging pressure sensor)	Tightening	0,6 daNm
(34)	bolts (Bracket / Inlet manifold)	Tightening	1,1 daNm
(35)	bolts (Bracket / Electrical harness mounting)	Tightening	1,1 daNm
(36)	bolts (Electrical harness mounting / Cylinder head)	Tightening	2.6 daNm
(37)	bolts (Turbocharging pressure regulation solenoid valve)	Tightening	1,1 daNm
(38)	bolts (Vacuum pipe support / Alternator mounting)	Tightening	1,1 daNm
(39)	bolts (Vacuum pipe support / Cylinder head)	Tightening	2.6 daNm
(40)	bolts (Air inlet manifold) (*)	Tightening	2 daNm
(*) Follow the tightening sequence			

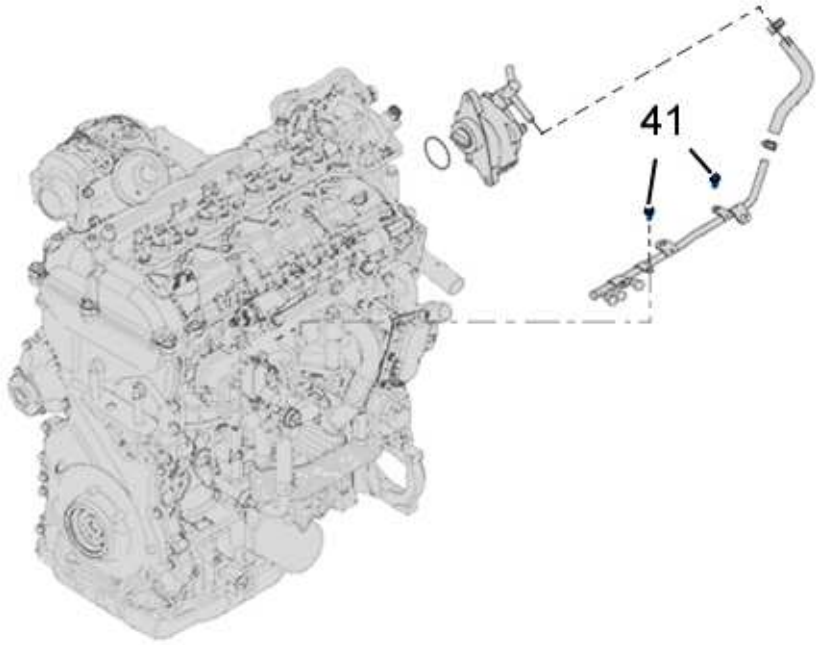

b1bb1gkd

Referenc	Designation	Stage	Tightening torque
(41)	bolts (Vacuum distribution pipe / Inlet manifold)	Tightening	1,1 daNm

5 - 2 - Sequence of tightening the bolts (40) and nuts (30)

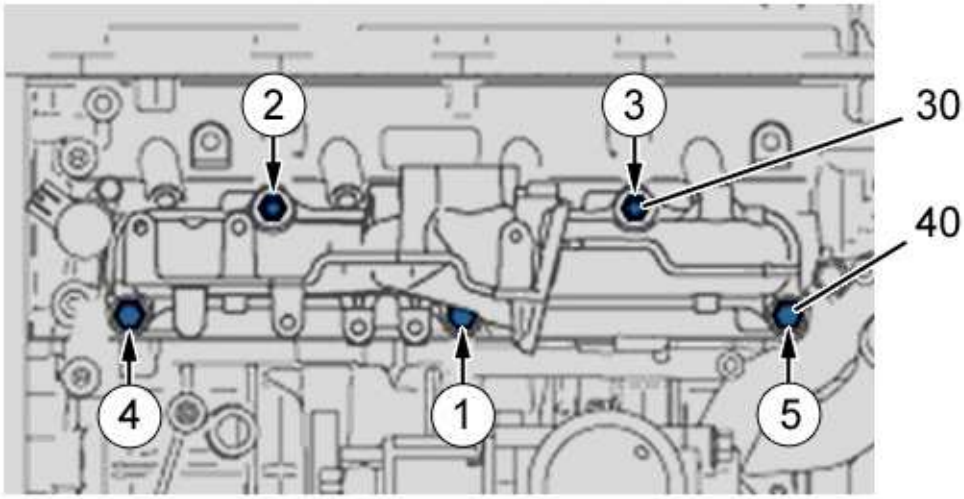

b1bb1gld

WARNING : Follow the tightening sequence

Tightening procedure :

- Tightening of the bolt (40) to 2 daN.m (De 1)
- Tighten the 2 nuts (30) to 2 m.daN (from 2 to 3)
- Tightening of the 2 bolts (40) to 2 m.daN (from 4 to 5)

6 - EXHAUST GAS RECIRCULATION CIRCUIT

6 - 1 - Tightening torques

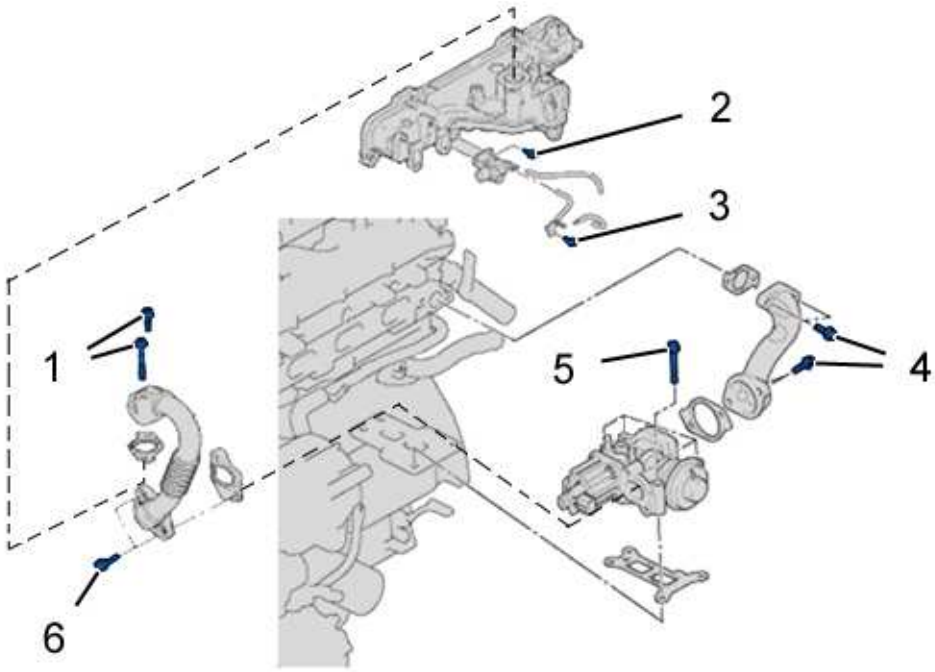

b1bb1gmd

Referenc	Designation	Stage	Tightening torque
(1)	bolts (EGR pipe / Intake air manifold)	Tightening	2 daNm
(2)	bolts (EGR (exhaust gas recycling) electrovalve)	Tightening	1,1 daNm
(3)	bolts (Vacuum pipe support)	Tightening	1,1 daNm
(4)	bolts (Exhaust gas inlet pipe) (*)	Tightening	2 daNm
(5)	bolts (Exhaust gas recycling valve) (*)	Tightening	2 daNm
(6)	bolts (EGR pipe / Exhaust gas recycling valve)	Tightening	2 daNm
(*) Follow the tightening sequence			

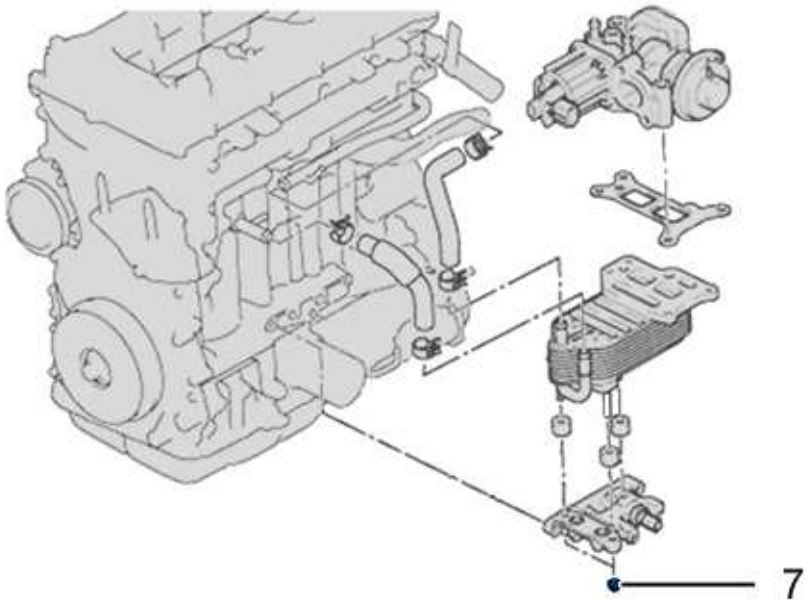

b1bb1god

Referen	Designation	Stage	Tightening torque
(7)	Nuts (Exhaust gas recycling (EGR) heat exchanger)	Tightening	2,8 daNm

6 - 2 - Sequence of tightening the bolts (4), (5)

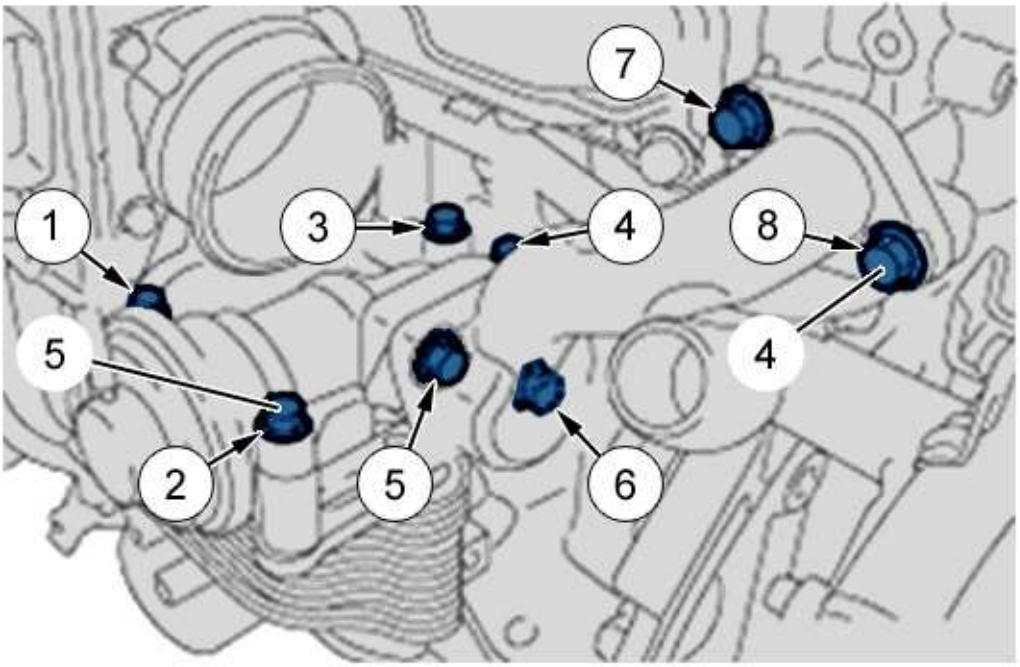

b1bb1gpd

WARNING : Follow the tightening sequence

Tightening procedure :

- Tightening of the 4 bolts (5) by hand (from 1 to 4)
- Tightening of the 4 bolts (4) by hand (from 5 to 8)
- Tightening of the 4 bolts (5) to 2 m.daN (from 1 to 4)
- Tightening of the 4 bolts (4) to 2 m.daN (from 5 to 8)

7 - COOLING SYSTEM

7 - 1 - Tightening torques

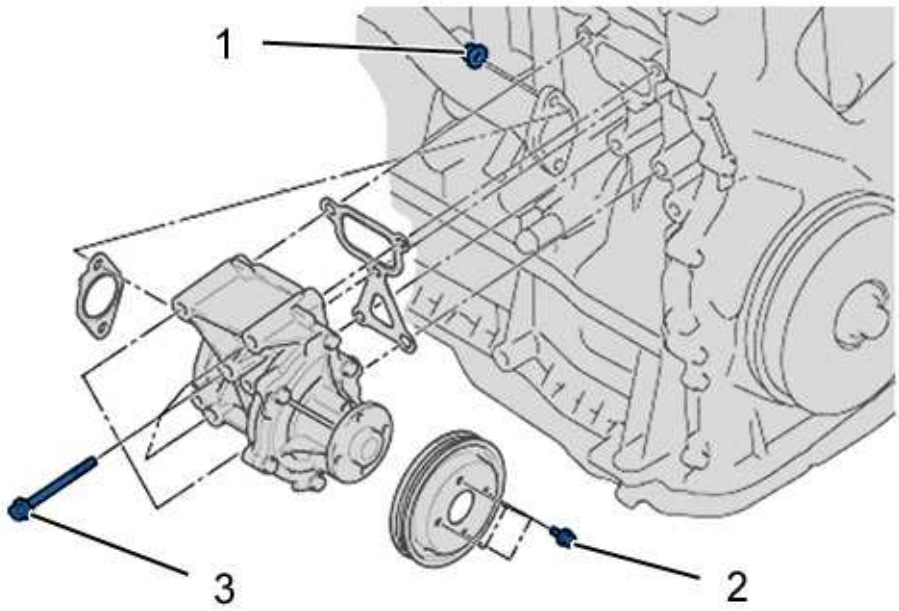

b1bb1gqd

Referen	Designation	Stage	Tightening torque
(1)	Nuts (Coolant outlet housing connection pipe / Coolant pump)	Tightening	2,8 daNm
(2)	bolts (Coolant pump pulley)	Tightening	1,1 daNm
(3)	bolts (Coolant pump fixing) (*)	Tightening	2,4 daNm
(*) Follow the tightening sequence			

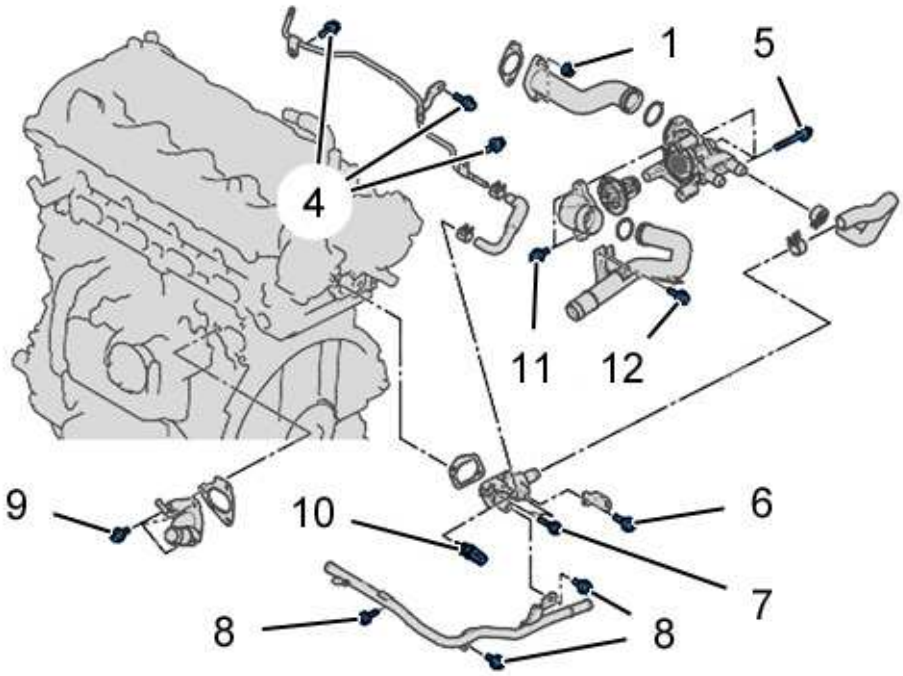

b1bb1grd

Referen	Designation	Stage	Tightening torque
(1)	Nuts (Coolant outlet housing connection pipe / Coolant pump)	Tightening	2,8 daNm
(4)	bolts (Coolant pipe / Cylinder head)	Tightening	1,4 daNm
(5)	bolts (Fixing of outlet housing with thermostat)	Tightening	2,3 daNm
(6)	bolts (Electrical harness mounting)	Tightening	1,1 daNm
(7)	bolts (Fixing of coolant bypass unit)	Tightening	2,6 daNm
(8)	bolts (Coolant pipe / Cylinder block)	Tightening	1,4 daNm
(9)	bolts (Coolant outlet housing fixing)	Tightening	2,6 daNm
(10)	Coolant temperature sensor	Tightening	3 daNm
(11)	bolts (Thermostat cover)	Tightening	1 daNm
(12)	bolts (Coolant outlet pipe)	Tightening	1,4 daNm

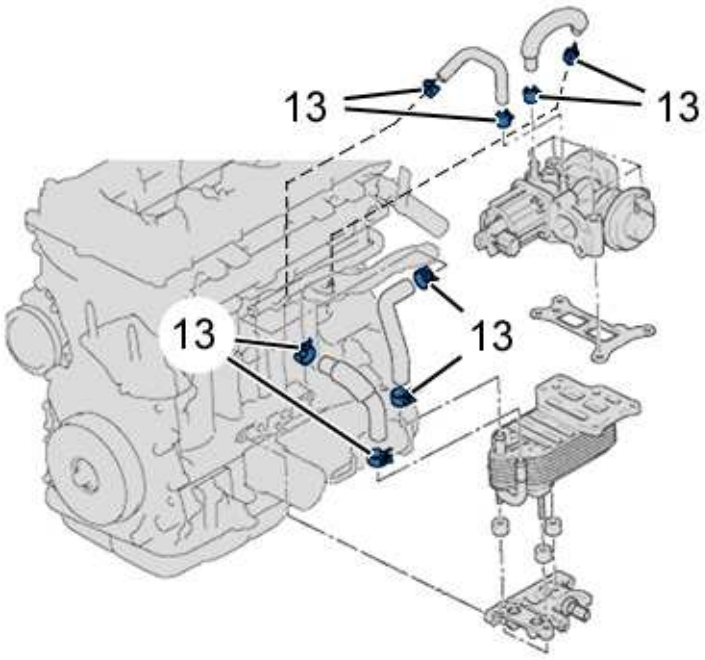

b1bb1gsd

Referen	Designation	Stage	Tightening torque
(13)	Spring clip	Tightening	-

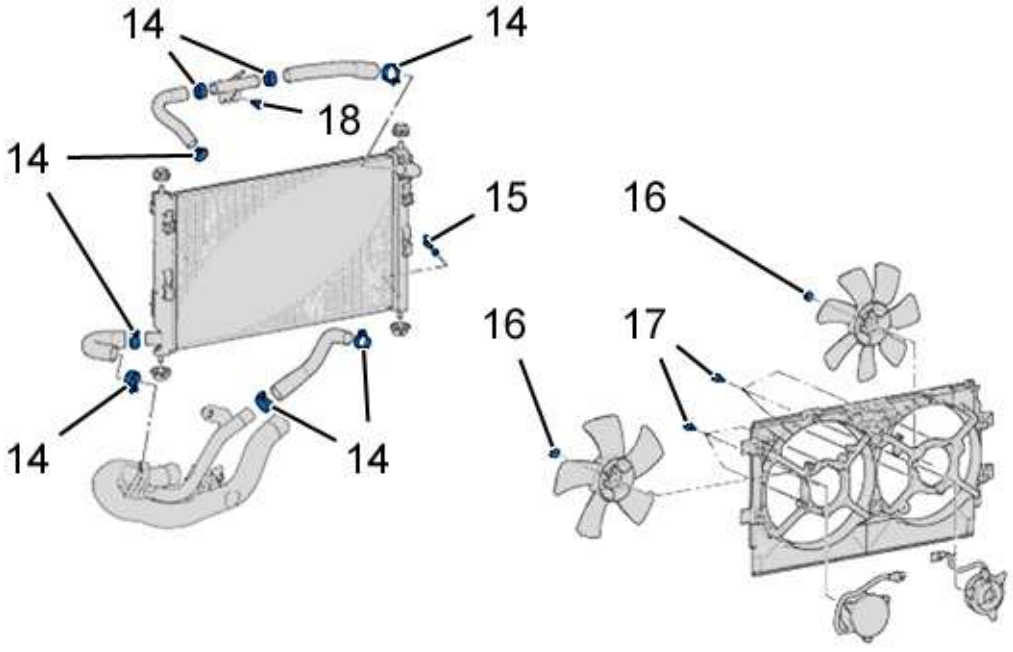

b1bb1gtd

Referen	Designation	Stage	Tightening torque
(14)	Spring clip	Tightening	-

(15)	Engine cooling radiator drain screw	Tightening	0,30 daNm
(16)	Nut (Fan)	Tightening	0,34 daNm
(17)	bolts (Cooling fan)	Tightening	0,44 daNm
(18)	bolts (Upper coolant pipe)	Tightening	0,95 daNm

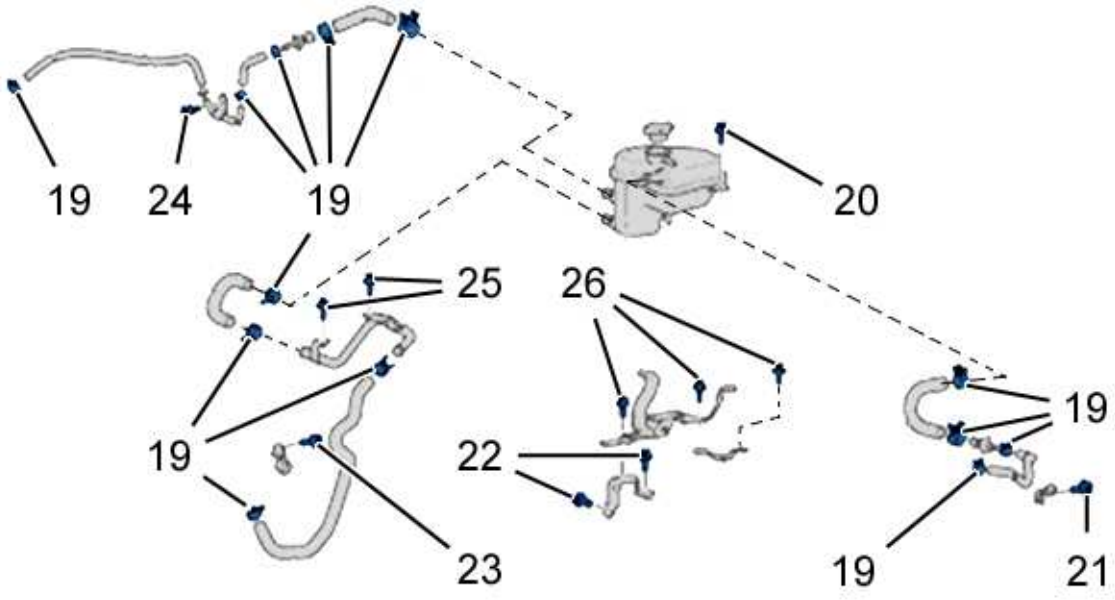

b1bb1gud

Referen	Designation	Stage	Tightening torque
(19)	Spring clip	Tightening	-
(20)	bolts (Expansion tank)	Tightening	0,7 daNm
(21)	bolts (Clip on timing cover)	Tightening	0,95 daNm
(22)	bolts (Expansion tank support / Chassis)	Tightening	0,95 daNm
(23)	bolts (Clip on timing cover)	Tightening	0,95 daNm
(24)	bolts (Connecting pipe / Chassis)	Tightening	0,4 daNm
(25)	bolts (Connecting pipe / Expansion tank support)	Tightening	0,7 daNm
(26)	bolts (Expansion tank support / Chassis)	Tightening	0,7 daNm

7 - 2 - Sequence of tightening the bolts (3)

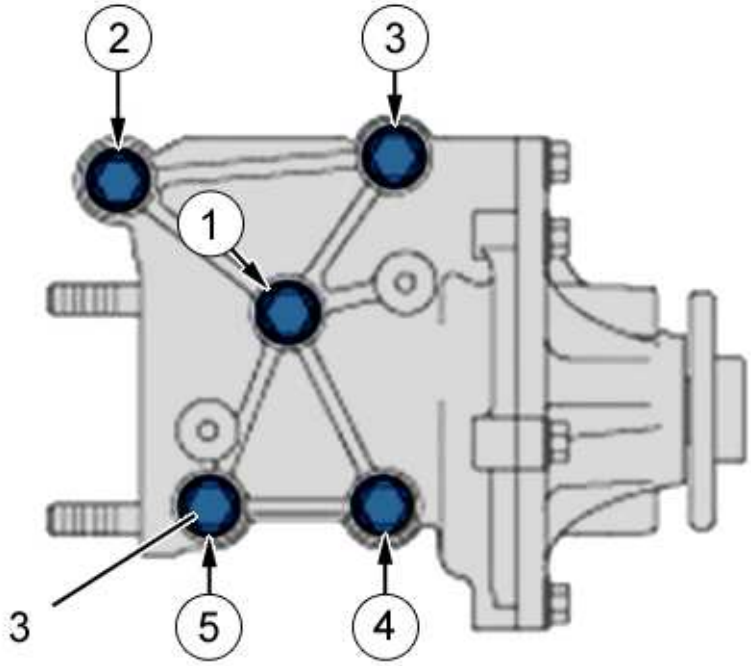

b1bb1gvd

WARNING : Follow the tightening sequence

Tightening of the 5 bolts (3) to 2,4 m.daN (from 1 to 5).

8 - INJECTION SYSTEM

8 - 1 - Tightening torques

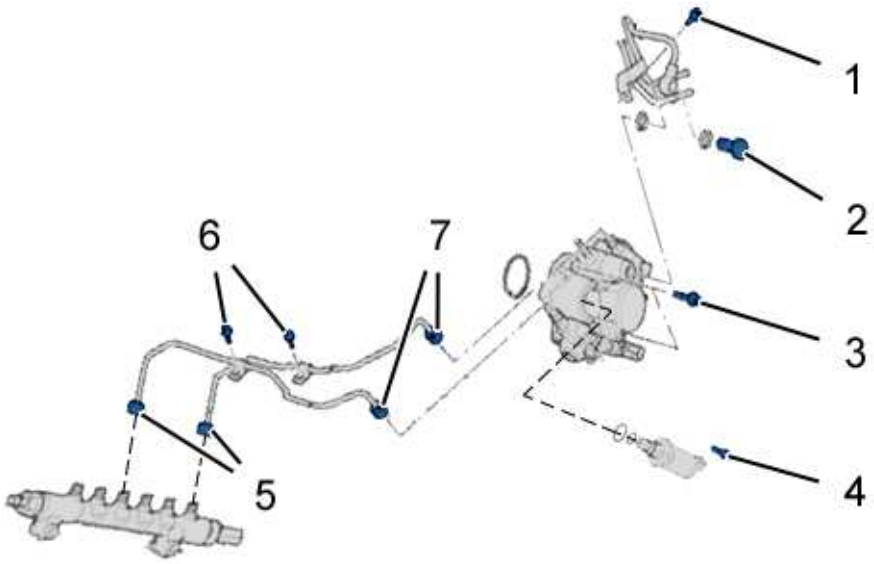

b1bb1gwd

Referen	Designation	Stage	Tightening torque
(1)	bolts (Fuel supply and return pipes clamp / Cylinder head)	Tightening	1,4 daNm
(2)	bolts (Fuel supply pipe / Fuel high pressure pump)	Tightening	1,7 daNm
(3)	bolts (Fuel high pressure pump)	Tightening	2,5 daNm
(4)	bolts (Fuel flow regulation electrovalve)	Tightening	0,5 daNm
(5)	Connections (High-pressure fuel pipes / Fuel high pressure common injection rail)	Pre-tighten	1,8 daNm
		Tightening	3,5 daNm
(6)	bolts (High pressure fuel pipe clamp / Cylinder head cover)	Tightening	1,1 daNm
(7)	Unions on the fuel high-pressure pump	Pre-tighten	1,8 daNm
		Tightening	3,5 daNm

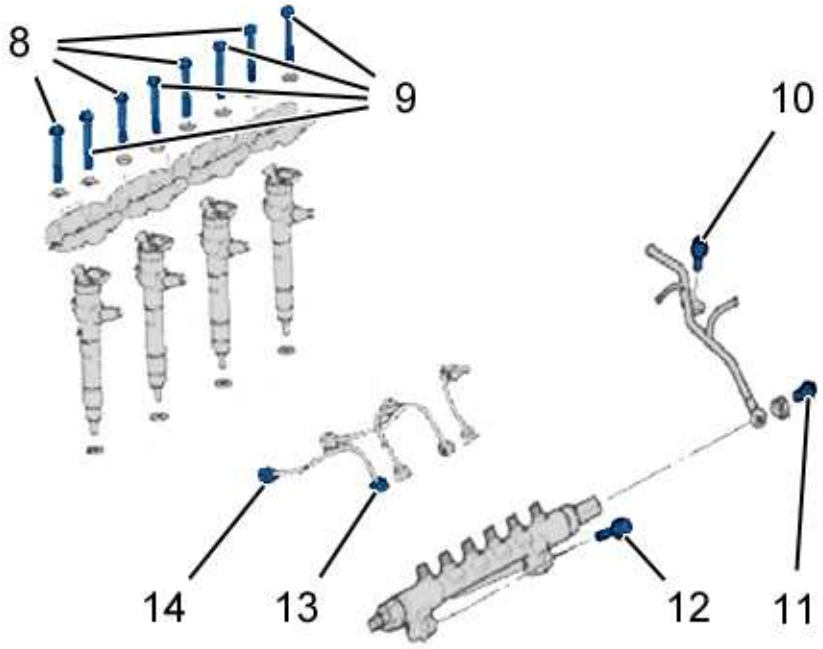

b1bb1gxd

Referen	Designation	Stage	Tightening torque
(8)	bolts (Diesel injector fixing flange) (*)	Pre-tighten	0,1 daNm
		Angular tightening	90°
(9)	bolts (Diesel injector fixing flange) (*)	Angular tightening	180°
(10)	bolts (Fuel return pipe fixing clamp / Cylinder head)	Tightening	1,1 daNm
(11)	bolts (Fuel return pipe / Fuel high pressure common rail)	Tightening	2 daNm
(12)	bolts (Fuel high pressure common injection rail)	Tightening	2,5 daNm
	Connections (High-pressure fuel pipes / Fuel	Pre-tighten	1,8 daNm

(13)	high pressure common injection rail)	Tightening	3,5 daNm
(14)	Connections (High-pressure fuel pipes / Diesel injectors)	Pre-tighten	1,8 daNm
		Tightening	3,5 daNm
(*) Follow the tightening sequence			

8 - 2 - Sequence of tightening the bolts (8), (9)

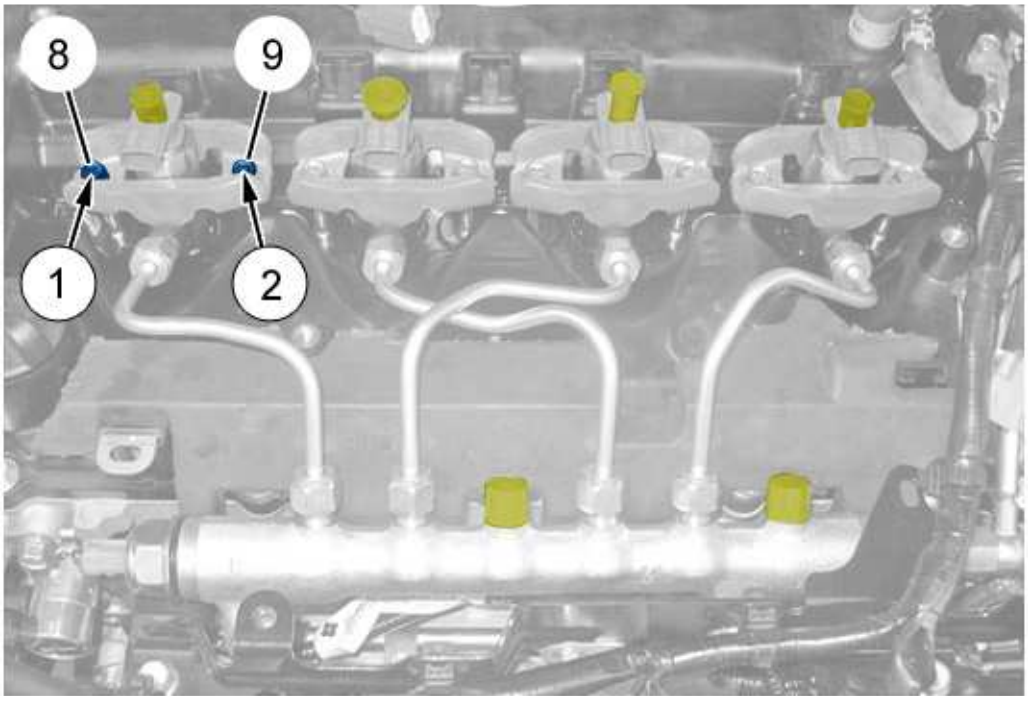

b1bb1gyd

WARNING : The clamp bolt (8) is on the timing side

WARNING : Repeat the operation for each diesel injector

WARNING : Follow the tightening sequence

Tightening procedure :

- Tightening of the bolt (8) by hand (De 1)
- Tightening of the bolt (9) by hand (De 2)
- Tightening of the bolt (8) to 0,1 daN.m (1)
- Angular tightening of the bolts (9) to 180° (De 2)
- Angular tightening of the bolts (8) to 90° (De 1)

9 - ALTERNATOR

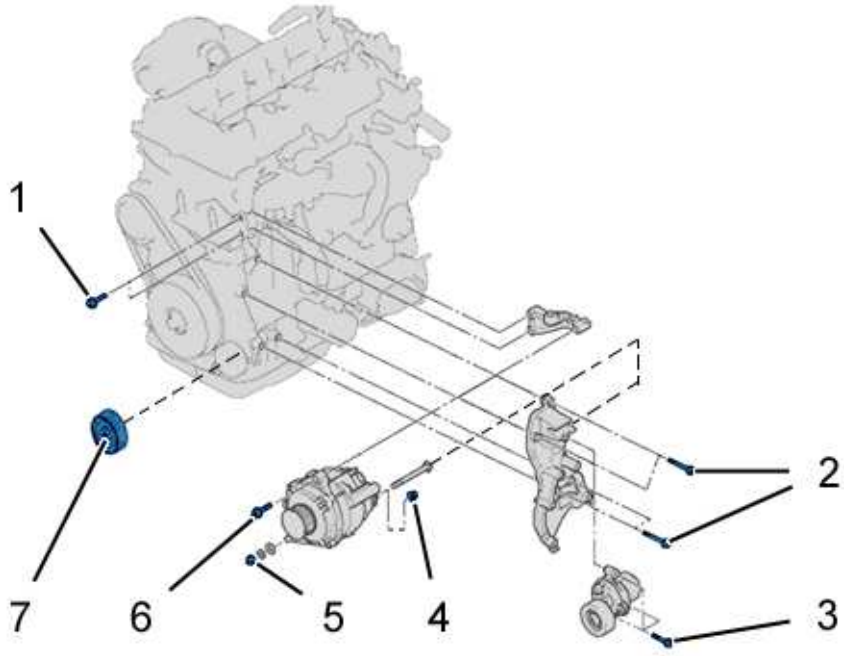

b1bb1h0d

Referenc	Designation	Stage	Tightening torque
(1)	bolts (Alternator upper support)	Tightening	2,7 daNm
(2)	bolts (Accessories support)	Tightening	2,7 daNm
(3)	bolts (Dynamic roller tensioner)	Tightening	2,7 daNm
(4)	Nut (Power circuit)	Tightening	1,2 daNm
(5)	Nut (Alternator lower fixing)	Tightening	4,7 daNm
(6)	bolts (Alternator upper fixing)	Tightening	5,5 daNm
(7)	bolts (Roller tensioner)	Tightening	4,7 daNm

10 - AIR CONDITIONING COMPRESSOR

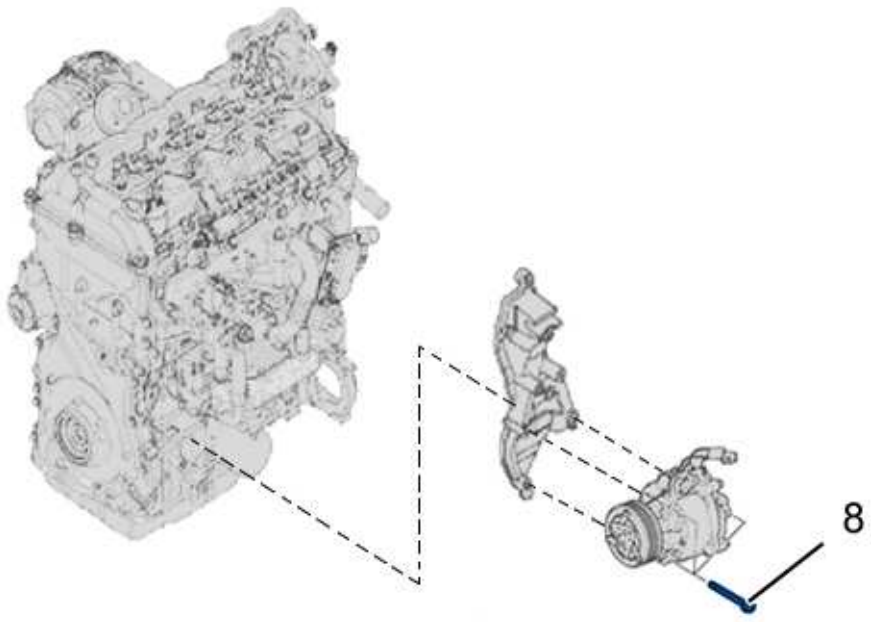

b1bb1h1d

Referenc	Designation	Stage	Tightening torque
(8)	bolts (Air conditioning compressor)	Tightening	2,3 daNm

11 - STARTER

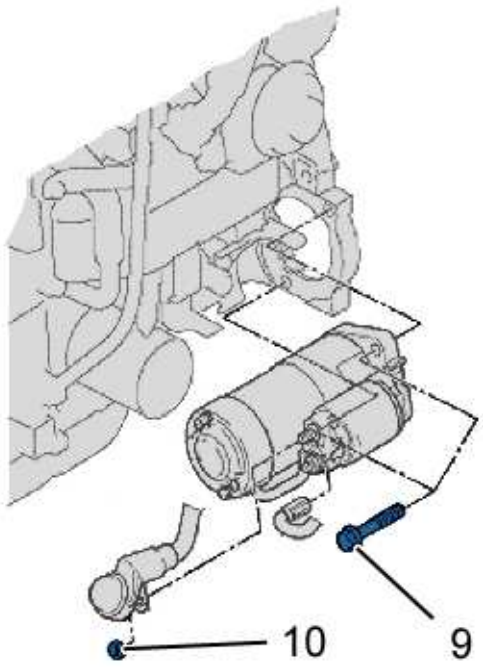

b1bb1h2d

Referenc	Designation	Stage	Tightening torque
(9)	bolts (Starter)	Tightening	3,6 daNm
(10)	Nut (Starter supply cable)	Tightening	1,1 daNm

DISMANTLING - RE-ASSEMBLY : STARTER

ESSENTIAL : Observe the safety and cleanliness recommendations

1 - REMOVING

Disconnect the battery.

Remove the under engine protection .

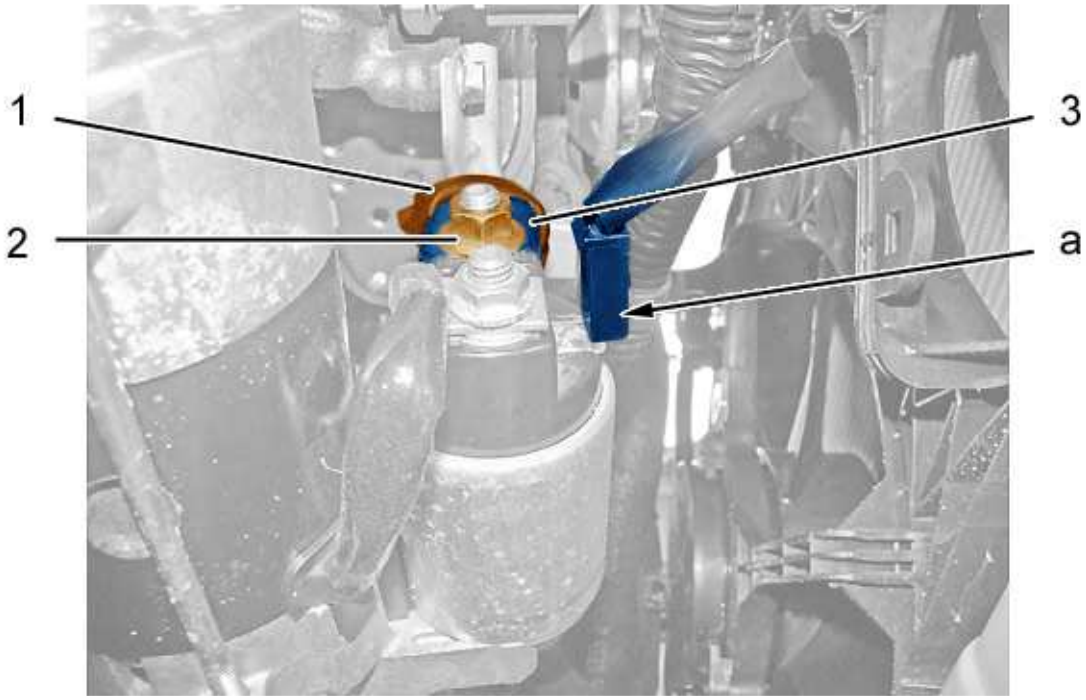

d1bg072d

Disconnect the connector (at "a").

Move aside the protector (1).

Remove the nut (2).

Move aside the starter supply cable (3).

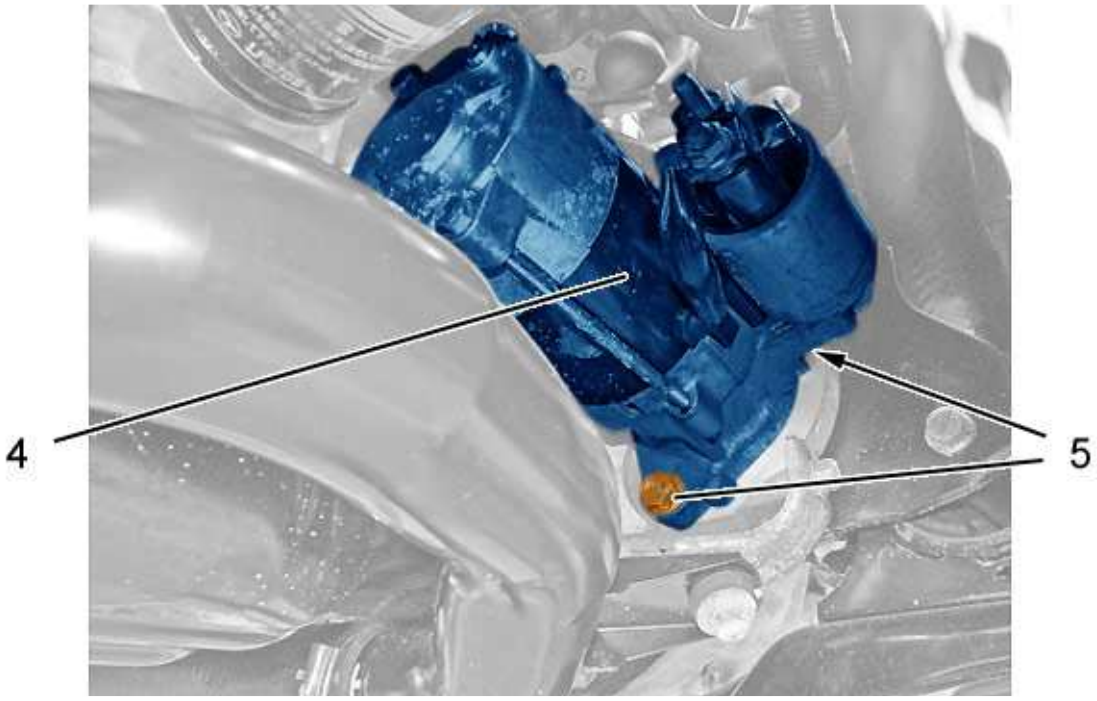

d1bg073d

Remove :

- The 2 bolts (5)
- The starter motor (4)

2 - REFITTING

> **WARNING :** Adhere to the tightening torques

Refit :

- The starter motor (4)
- The 2 bolts (5)

Position : The starter supply cable (3).

Refit the nut (2).

Reposition the protection (1).

Connect the connector (at "a").

Refit the under-engine protection .

> **WARNING :** Perform the operations to be carried out following reconnection of the battery

Reconnect the battery.

TIGHTENING TORQUES : ENGINE ASSEMBLY MOUNTINGS - (BVM 6 (4X4), (4X2)) GEARBOX

WARNING : Adhere to the tightening torques

1 - RH ENGINE SUPPORT

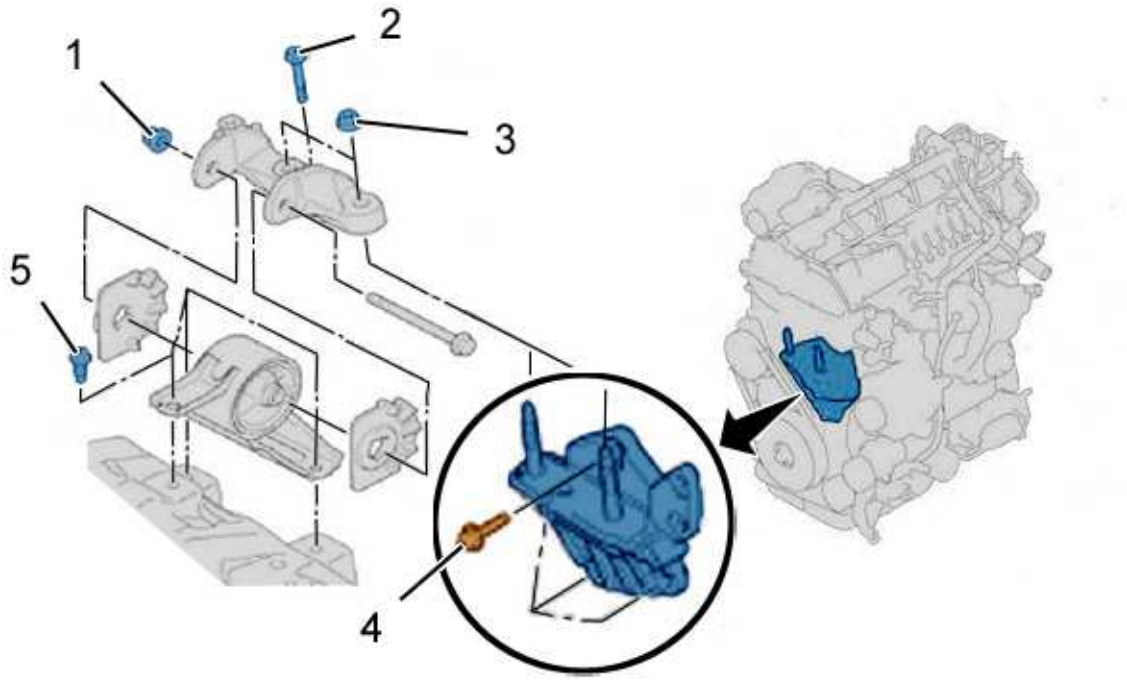

b1bb1fnd

Reference	Designation	Tightening torque
(1)	Bolt/nut fixing the hanging support	10 daNm
(2)	bolts - Assembly fixing	8,2 daNm
(3)	Nut - Assembly fixing	8,2 daNm
(4)	bolts - Intermediate mounting	5,3 daNm
(5)	bolts - Bracket (On the chassis leg)	5 daNm

2 - GEARBOX MOUNTING

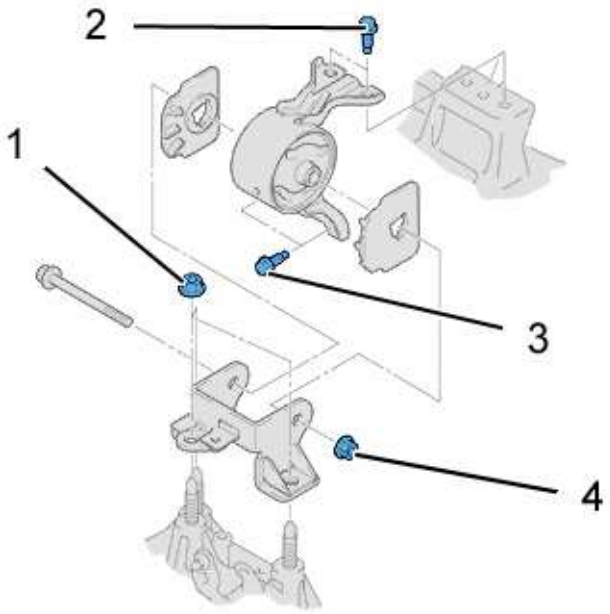

b1bm06ad

Reference	Designation	Tightening torque
(1)	nuts - Bracket (On the gearbox)	4,7 daNm
(2)	bolts - Bracket (On the chassis leg)	5 daNm
(3)	bolts - Bracket (On the chassis leg)	5 daNm
(4)	Bolt/nut fixing the hanging support	9,5 daNm

3 - REACTION ROD

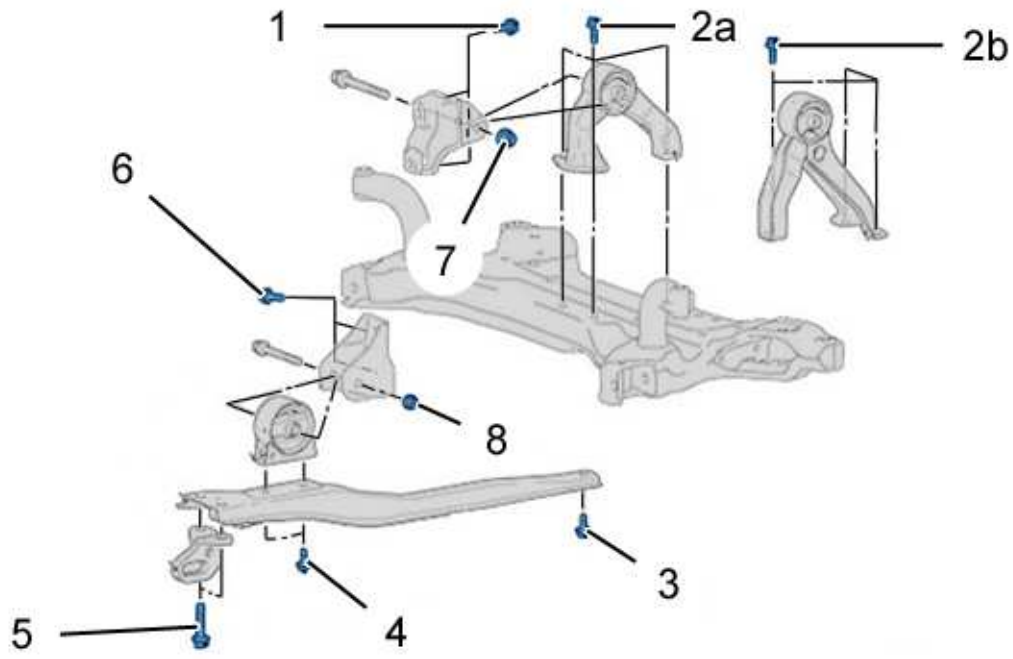

b1bb1fod

Referenc	Designation	Tightening torque
(1)	bolts / Rear bracket (On the gearbox)	9 daNm
(2a)	bolts / Rear torque reaction rod mounting on subframe (4x2)	5 daNm
(2b)	bolts / Rear torque reaction rod mounting on subframe (4x4)	5 daNm
(3)	bolts / Crossmember fixing on front subframe	7,1 daNm
(4)	bolts / drift (On the crossmember)	5 daNm
(5)	bolts / Crossmember fixing on body	7,1 daNm
(6)	bolts / Front support (On the gearbox)	9 daNm
(7)	bolts / Rear torque reaction rod mounting nut	5,3 daNm
(8)	bolts / Front torque reaction rod mounting nut	5,6 daNm

4 - DRIVESHAFT BEARING

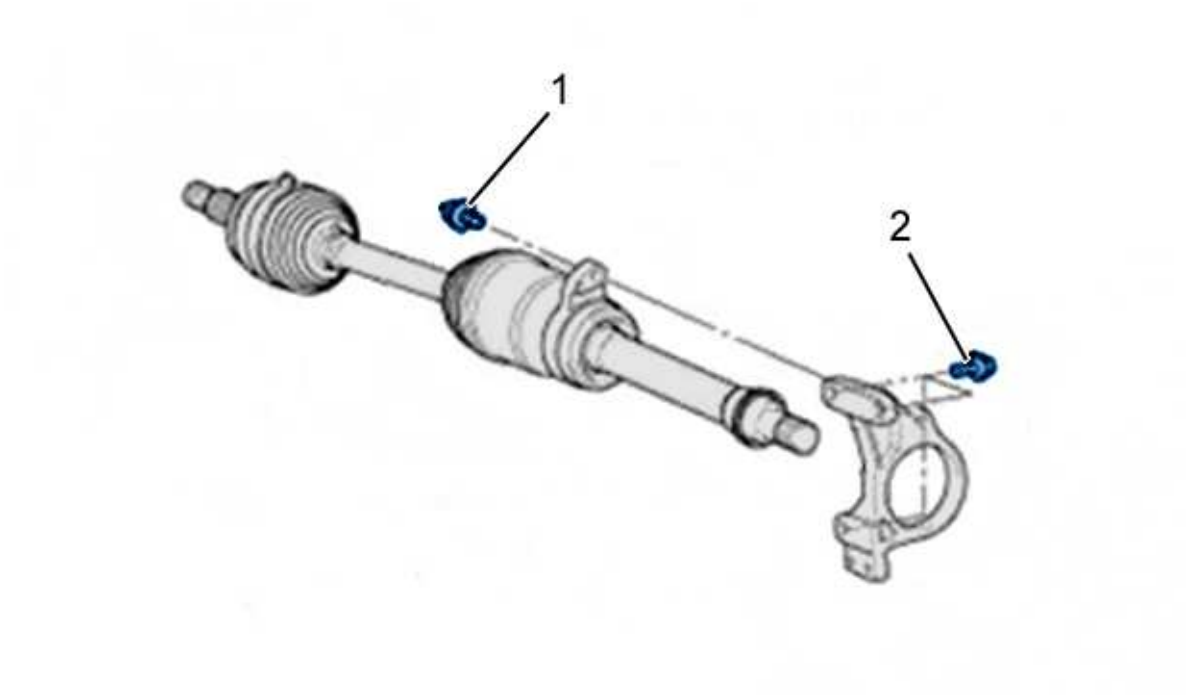

b1bb1hed

Reference	Designation	Tightening torque
(1)	bolts- Transmission	4,2 daNm
(2)	bolts - Driveshaft bearing	4,6 daNm

TIGHTENING TORQUES : MANUAL GEARBOX/ENGINE COUPLING

1 - GEARBOX COUPLING (F5M43) ON ENGINE

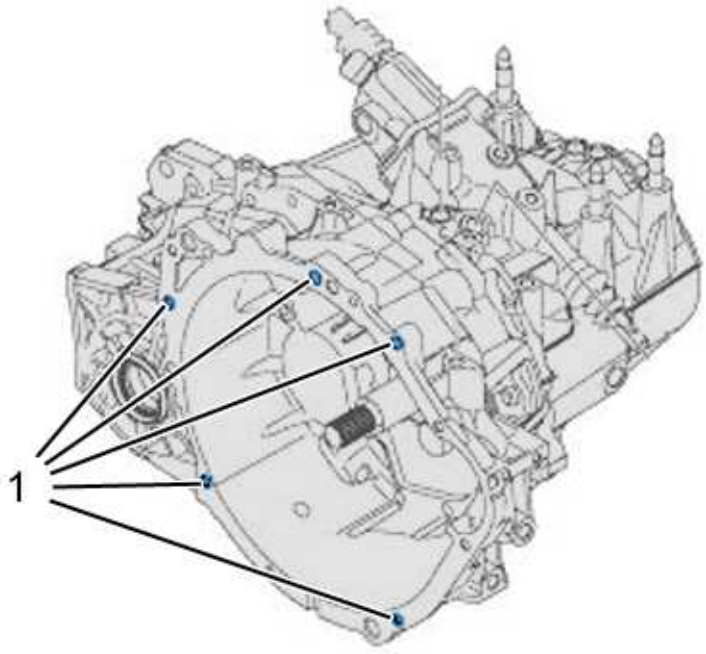

b2cb0dnd

Reference	Designation	Tightening torque
(1)	Engine/gearbox coupling	2,4 daNm

2 - GEARBOX COUPLING (F5MBB - W5MBB) ON ENGINE

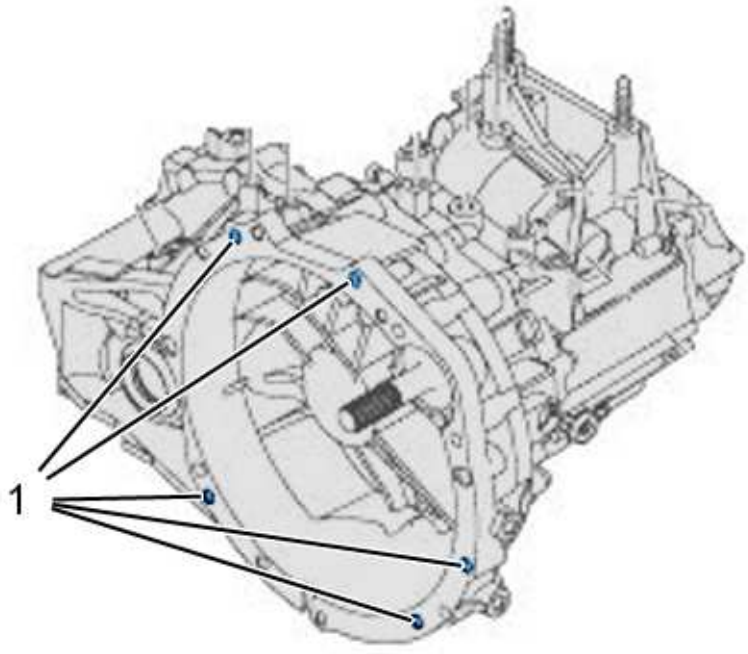

b2cb0dod

Reference	Designation	Tightening torque
(1)	Engine/gearbox coupling	4,8 daNm

3 - GEARBOX COUPLING (F6MBA ET W6MBA) ON ENGINE

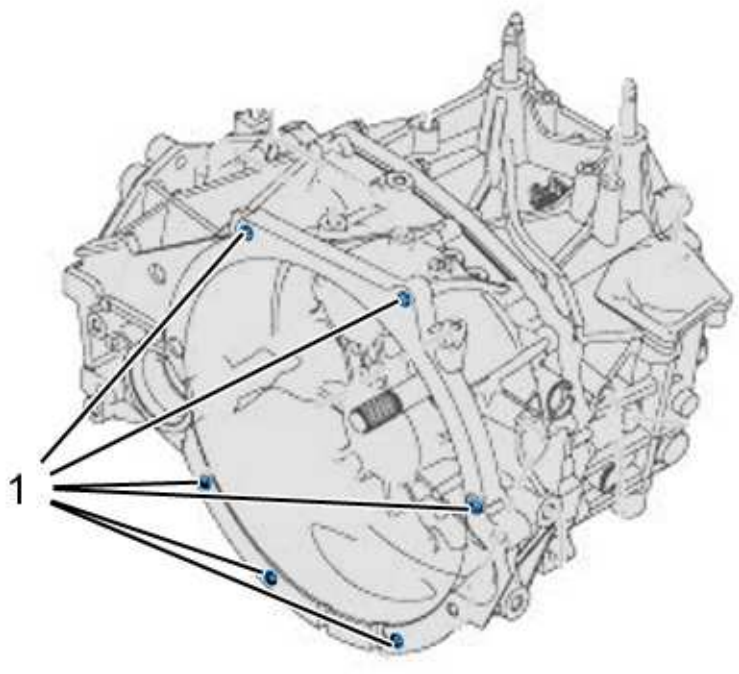

b2cb0dpd

Reference	Designation	Tightening torque
(1)	Engine/gearbox coupling	4,8 daNm

4 - GEARBOX COUPLING AINSIN MIDSIZE (AMS) ON ENGINE

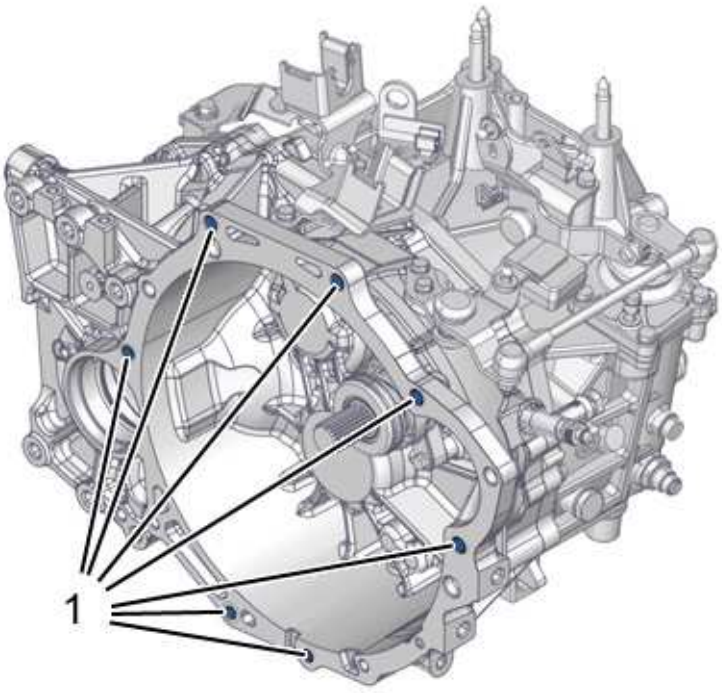

b2cb0fad

Reference	Designation	Tightening torque
(1)	Engine/gearbox coupling	4,8 daNm

DISMANTLING - RE-ASSEMBLY : HYDRAULIC CLUTCH STOP

1 - REMOVING

Remove the gearbox.

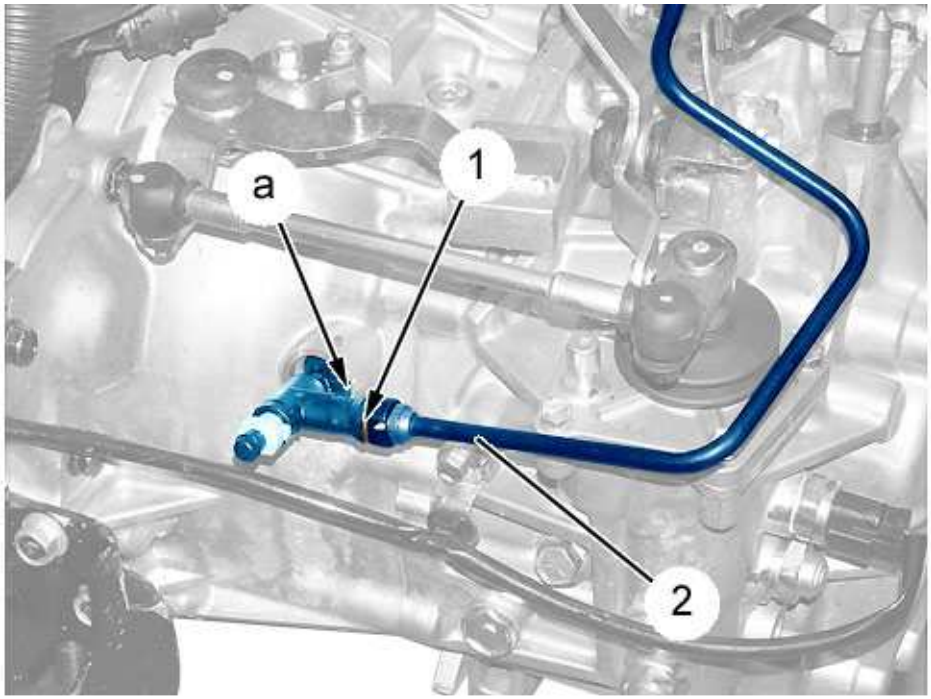

b2bm00vd

Pull on the clip (1) to disengage it from the connector.

Uncouple : The hydraulic pipe (2).

NOTE : Place a container to catch the brake fluid under the hydraulic pipe

Unclip : The bleed pipe (as "a").

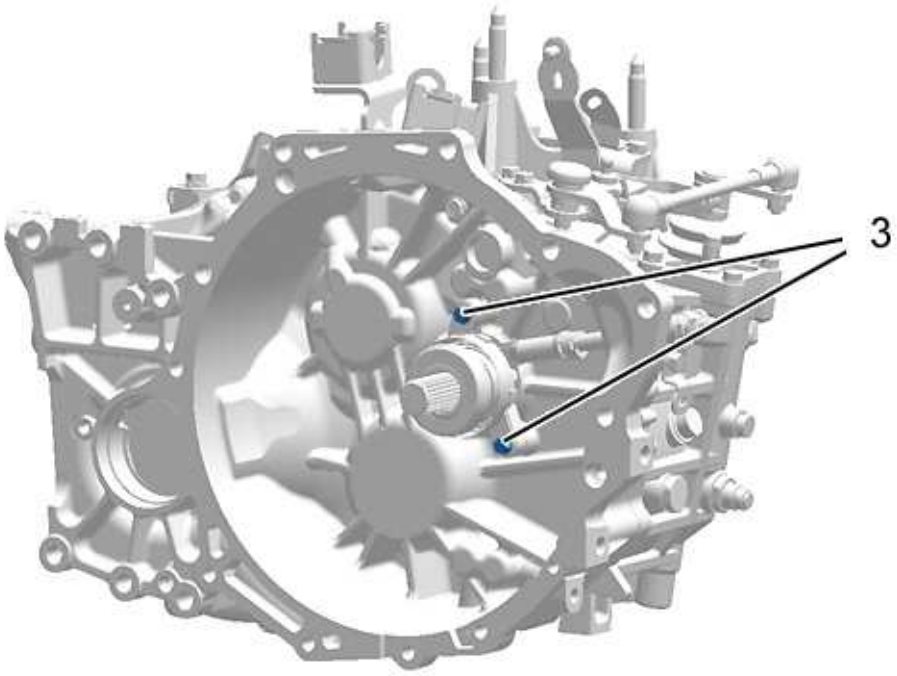

b2bm00wd

Remove the 2 bolts (3).

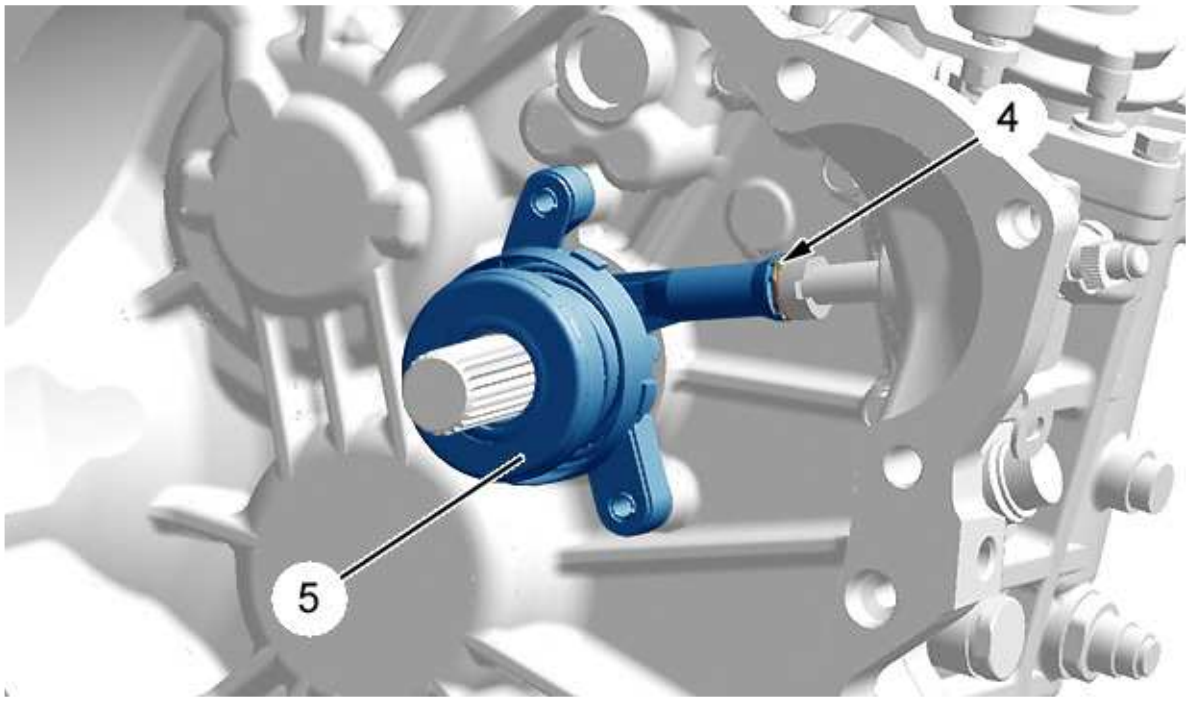

b2bm00xd

Pull on the clip (4) to disengage it from the connector.

Uncouple - Remove : The hydraulic stop (5).

2 - REFITTING

WARNING : Adhere to the tightening torques

Refit : The hydraulic stop (5) on the main shaft .

Couple the hydraulic stop (5) to the bleed pipe .

Clip :

- The clip (4)
- The bleed pipe (as "a")

Tighten the 2 bolts (3) (Manually).

Tighten the 2 bolts (3).

Couple the hydraulic pipe a (2) to the bleed pipe .

Clamp the clip (1).

Refit the gearbox.

Bleed the clutch hydraulic stop circuit .

BLEEDING : HYDRAULIC CLUTCH CONTROL

ESSENTIAL : Observe the safety and cleanliness recommendations

1 - BLEEDING

ESSENTIAL : Use only clean fluid free from bubbles. Avoid any introduction of impurities into the hydraulic system

Use only approved and recommended hydraulic fluid(s) (DOT 4).

Place the vehicle on a 2-post lift.

Fill the brake fluid reservoir to its maximum capacity.

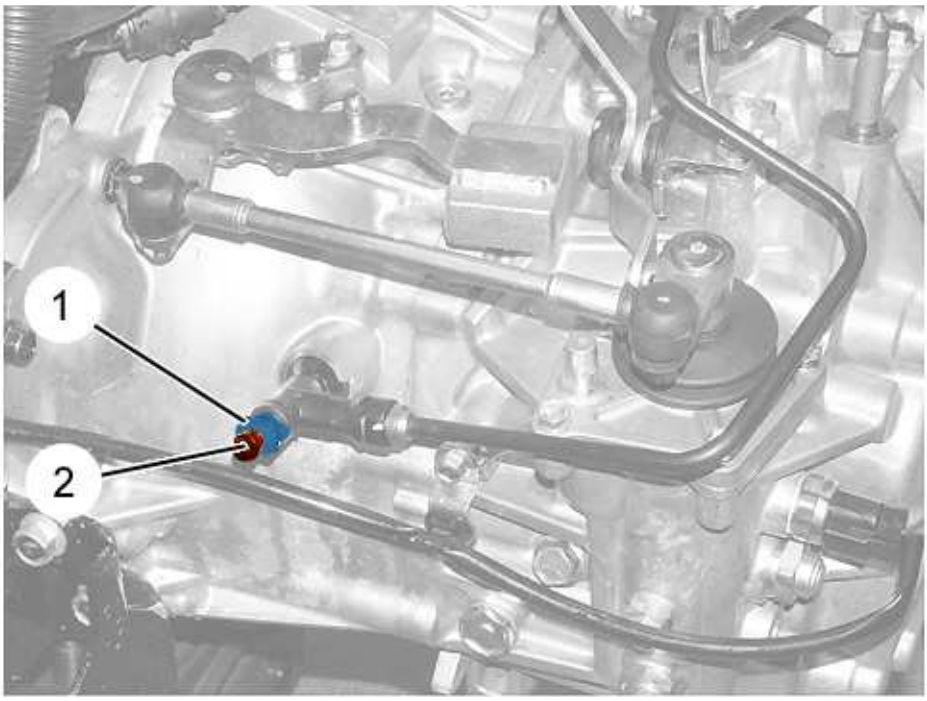

b2bm015d

Remove : The protective cap (2).

Couple a transparent tube on the bleed screw (1).

Immerse the end of the transparent pipe in a receptacle containing brake fluid, located lower than the bleed screw (1).

WARNING : The end of the transparent pipe must be submerged into the brake fluid

NOTE : Two people are required to perform the following operation

Open the bleed screw (1) (Turn anticlockwise).

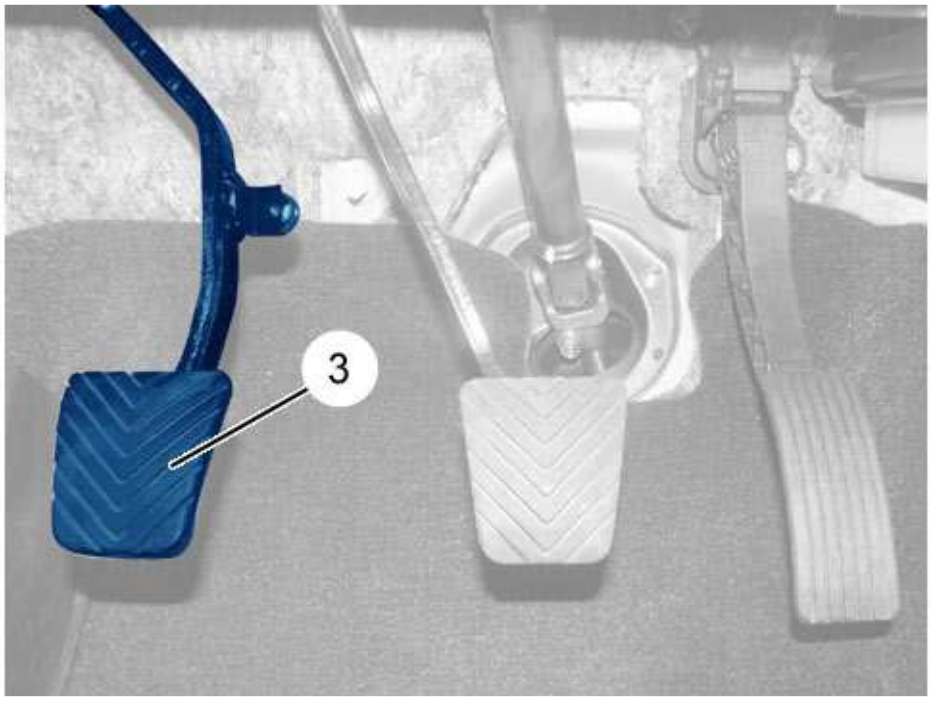

b2bi00hd

Press the clutch pedal (3) slowly.

Keep the clutch pedal at the end of its travel after the last movement.

Close the bleed screw (1).

Raise the clutch pedal (3) to the uppermost position.

Repeat the operation 5 times (max.).

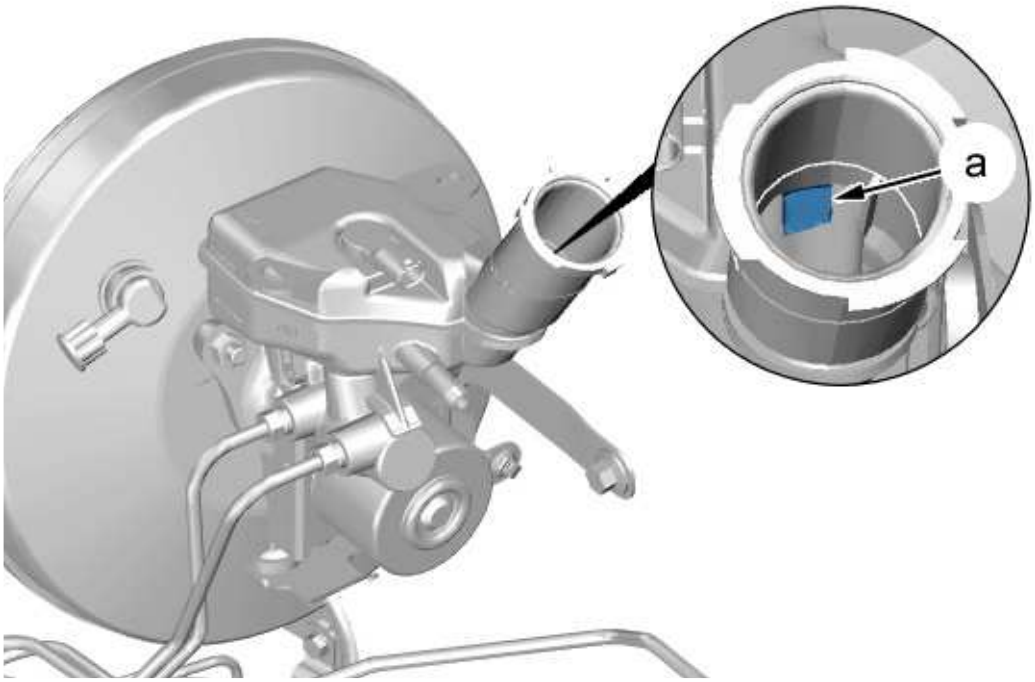

b3fm09fd

WARNING : The brake fluid level must not fall below the opening (as "a")

Fill the brake fluid reservoir to its maximum capacity.

Repeat the operation until the fluid running out is clean and free from air bubbles.

Top up the brake fluid level to the MAX. level in the brake fluid reservoir.

2 - CHECK

2 - 1 - Clutch pedal in the "high" position

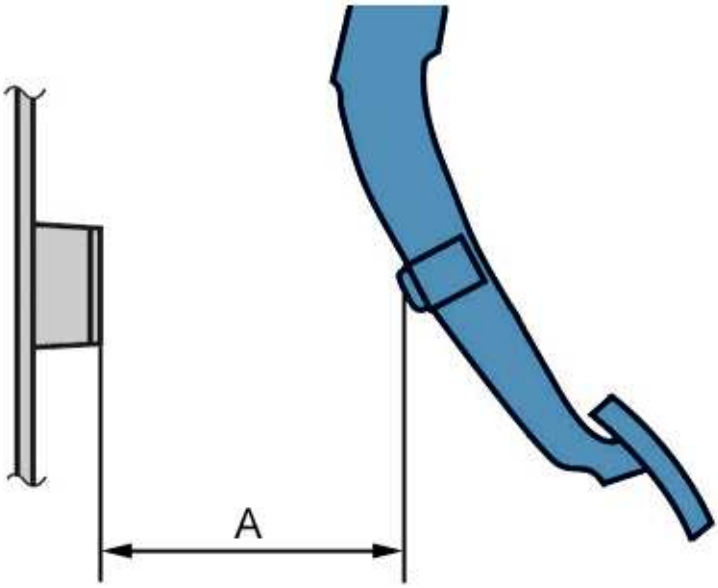

b2bi00fd

Measure dimension "A".

Standard values :

- left-hand drive : 113 ± 3 mm
- right-hand drive : 82 ± 2 mm

2 - 2 - Clutch pedal in the "bite point" position

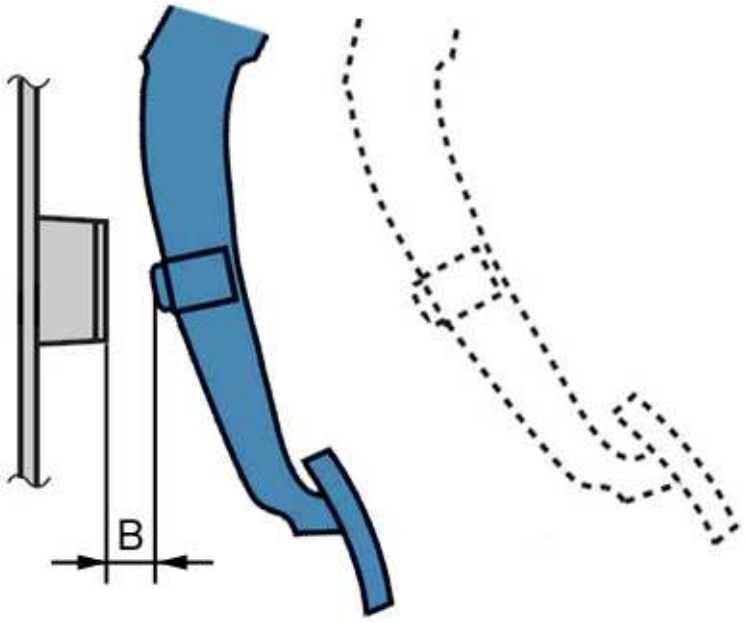

b2bi00gd

Measure dimension "B".

Standard values :

- left-hand drive : 15 mm or more
- right-hand drive : 11 mm or more

2 - 3 - Continued

If the dimensions measured do not correspond to the standard values :

- Bleed the hydraulic circuit again
- Check : The master-cylinder
- Check : The hydraulic clutch stop

CHECKING AND ADJUSTING VALUES : F6MBC W6MBC MANUAL GEARBOX

1 - IDENTIFICATION

1 - 1 - Exterior presentation



b2cb0hfd

"a" : Identification label.

1 - 2 - Interior presentation

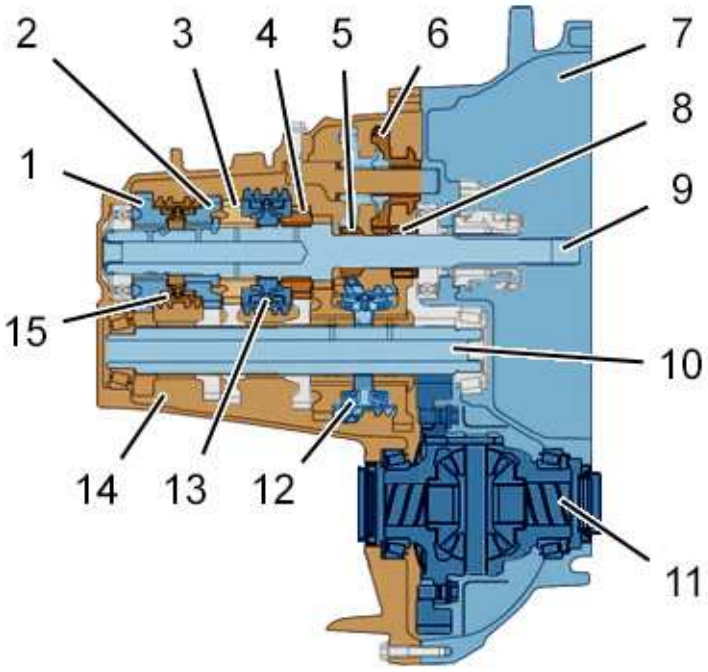

b2cb0hgd

(1) 6th gear.

(2) 5th speed gear.

(3) 4th gear.

(4) 3rd gear pinion.

(5) 2nd gear.

(6) Reverse gear .

(7) clutch housing.

(8) 1st gear.

(9) input shaft.

(10) output shaft.

(11) differential box.

(12) 1st/2nd gear synchronizer.

(13) 3rd/4th synchronizer.

(14) Gearbox casing.

(15) 5th/6th gear synchronizer.

2 - DATA

2 - 1 - Application

Research type	Legislation type	Type of gearbox/Stages
F6MBC-1-ABZ	BOGOK	F6MBC
W6MBC-1-ABZC	BOGOY	W6MBC

2 - 2 - Gear

Type of gearbox	F6MBC 4X2	W6MBC 4X 4
1st	3,833	
2nd	2,047	
3rd	1,303	
4th	0,975	
5th	0,744	
6th	0,659	
Reverse gear	3,545	
crown wheel and pinion (Differential output)	4,058	
Transfer box torque		0,425

3 - LUBRICATION

3 - 1 - gearbox

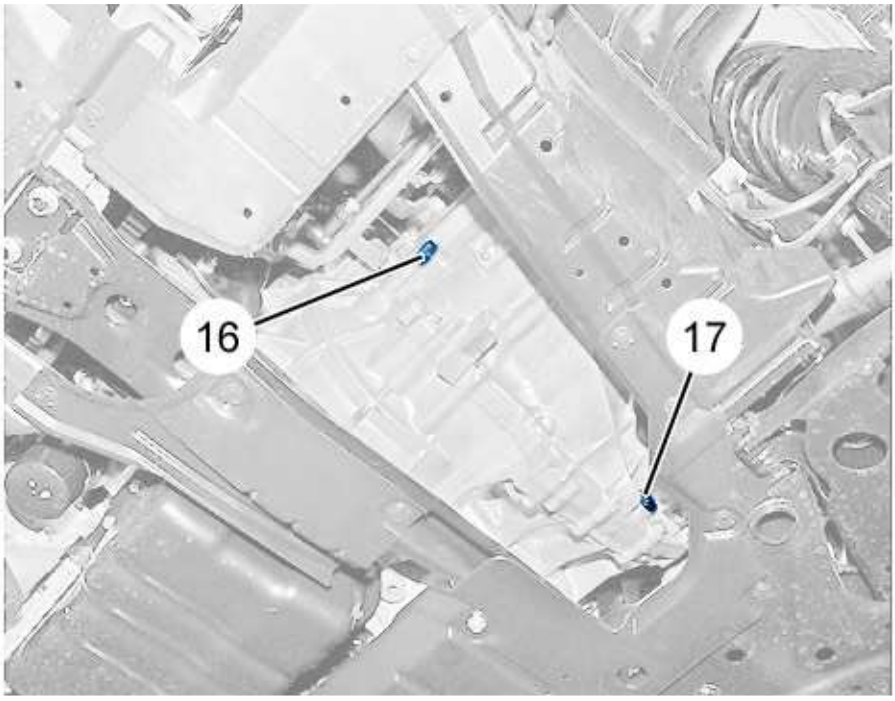

b2cb0hdd

(16) filling and level plug.

(17) drain plug.

Type of oil NEW MULTI GEAR OIL- DIA QUEEN API GL-3-SAE 75 W 80.

Type of gearbox	F6MBC	W6MBC
Oil quantity	2,6 litres	2,7 litres

3 - 2 - Transfer box

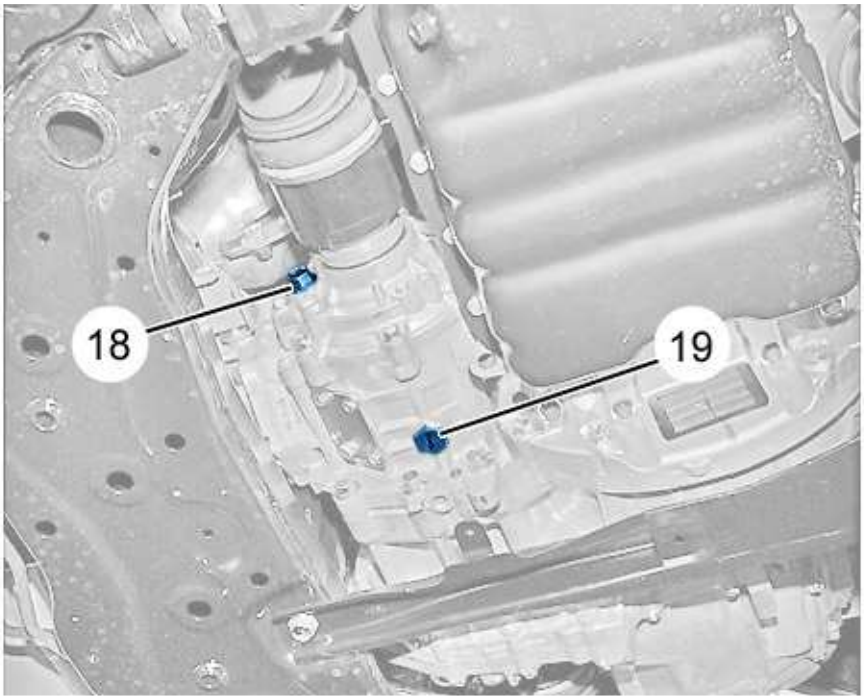

b2cb0hed

(18) filling and level plug.

(19) drain plug.

Type of oil API GL-5 SAE80.

Quantity : 0,47 litres.

> **NOTE :** The transfer box is sealed; it is not necessary to drain it in order to remove the propeller shaft and the front transverse drive shafts

RECOMMENDED CONSUMABLES : ENGINE OILS - GEARBOX

1 - STANDARDS IN FORCE

The classification of the engine oils is established by the following recognised bodies :

- S.A.E. : Society of Automotive Engineers
- API : American Petroleum Institute (As these specifications emanate from an American standards organisation and bear no comparison with the European specifications from ACEA, they are now deleted from all the PSA documents dealing with lubricants)
- ACEA : Association des Constructeurs Europeens d'Automobiles

NOTE : In addition to these norms, PSA PEUGEOT CITROËN has defined standards that are specific to engine lubricants designed for its own products

2 - S.A.E NORMS

Requirements for viscosity grades relating to engine oils.

The choice of the various viscosity grades is again linked with a use which conforms to the types of climate defined in the diagram below.

For example the use of grade 10W40 is limited to the temperate countries (from - 17 °C to + 37 °C) or to a hot climate.

NOTE : For any other application, the grade must be chosen in line with the climatic zone of the country of use

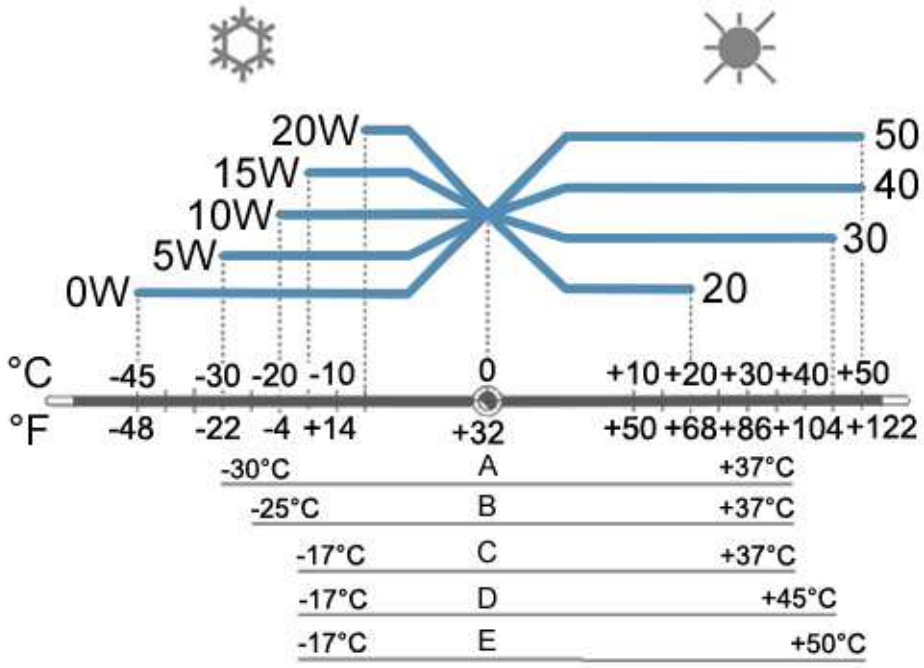

e4ap00bd

"A" Very cold.

"B" Cold.

"C" Moderate.

"D" Hot.

"E" Very hot.

3 - ACEA STANDARDS

3 - 1 - Petrol and diesel mixed oils recommended by PSA PEUGEOT CITROËN

Examples :

- ACEA A3/B4 : Blended oils specific to certain direct injection diesel engines
- ACEA A5/B5 : Blended oils with very high performance, for all engines, favouring fuel economy

The meaning of the first letter does not change, it always refers to the engine type :

- A = Petrol and petrol/LPG dual fuel engines
- B = Diesel engines

The next figure does change and refers to the following types of oil :

- 2 = Mineral oils
- 3 = High performance oils
- 4 = Oils specific to certain direct injection diesel engines
- 5 = Oils with very high performance, favouring lower fuel consumption

> **WARNING :** Since 2004, the ACEA has imposed mixed oils : A2/B2 ; A3/B3 ; A3/B4 ; A5/B5. Therefore, all lubricants recommended by "PSA PEUGEOT CITROËN" are mixed ; There are no longer any specific petrol or diesel oils

3 - 2 - Introduction of low ash content oils (LOW SAPS)

Low ash content oils reduce the amount of ash entering the exhaust and so help lengthen the life of the emissions control system.

The ash content changes from 1,6 % in current oils to 0,8 % in these new oils (maximum authorised values).

> **NOTE :** LOW SAPS (Sulphurated Ash Phosphorus Sulphur)

New ACEA specifications :

- C3 : Moderate ash content
- C2 : Moderate ash content and fuel economy
- C1 : Very low ash content and fuel economy
- C4 : Very low ash content and fuel economy

"C2" oil is a mixed petrol and diesel energy reduction oil more particularly adapted to engines equipped

with an emissions control system.

4 - PSA PEUGEOT CITROËN NORMS

The ACEA minimum specifications no longer satisfy all of the requirements of PSA PEUGEOT CITROËN, and particularly for the characteristics relative to EURO 5 and above standards as follows :

- Savings in CO2
- Compatibility with biofuels
- Resistance of the oil to corrosion
- Emissions control system durability

Compliance with the correspondence table below is imperative when servicing PSA PEUGEOT CITROËN vehicles dating from RPO 11788.

> **WARNING :** Observe the correspondences in the table below, when servicing PSA PEUGEOT CITROËN vehicles dating from RPO 11788

Type of oil	SAE grade	PSA PEUGEOT CITROËN norms	Latin America	China	World
Mineral	15W40	B71 2295	-	-	X
Semi-synthetic	10W40	B71 2300	-	-	X
Synthetic	5W40	B71 2296	-	-	X
Emission control synthetic	5W30	B71 2290	-	-	X
Emission control synthetic	0W30	B71 2312	-	-	X
Synthetic	5W30	B71 2301	-	X	-
Synthetic	0W30	B71 2302	X	X	-

For topping up oil between two maintenance intervals, it is authorised to use the following oils from the ACEA norm : C1 / C2 / C3.

5 - LUBRICANTS COMPLYING WITH THE PSA PEUGEOT CITROËN NORMS

PSA PEUGEOT CITROËN norms	SAE grade	Type of oil	Products complying with the Norms
B71 2295	15 W 40	Mineral	TOTAL ACTIVA 5000 15W40 et 20W50 TOTAL QUARTZ 5000 15W40 et 20W50
			TOTAL ACTIVA 7000 10W40 TOTAL ACTIVA DIESEL 7000 10W40

B71 2300	10 W 40	Semi-synthetic	TOTAL ACTIVRAC 10W40 TOTAL QUARTZ 7000 10W40 TOTAL QUARTZ DIESEL 7000 10W40
B71 2296	5 W 40	Synthetic	TOTAL ACTIVA 9000 5W40 TOTAL QUARTZ 9000 5W40
B71 2290	5 W 30	Emission control synthetic	TOTAL ACTIVA INEO ECS TOTAL QUARTZ INEO ECS
B71 2312	0 W 30	Emission control synthetic	TOTAL QUARTZ INEO FIRST
B71 2301	5 W 30	Synthetic	TOTAL QUARTZ 9000 FUTURE XPC 5W30
B71 2302	0 W 30	Synthetic	TOTAL QUARTZ INEO FIRST

6 - RECOMMENDATIONS

Use exclusively one of the following oils :

- TOTAL ACTIVA
- TOTAL QUARTZ
- Or any other oil complying with the PSA PEUGEOT CITROËN norms (refer to the restriction tables)

It is preferable to use one of the following low ash oils :

- TOTAL ACTIVA INEO ECS
- TOTAL QUARTZ INEO ECS
- TOTAL QUARTZ INEO FIRST
- Or any other oil that conforms to the PSA PEUGEOT CITROËN B71 2290 or B71 2312 norms

NOTE : These oils have superior characteristics to those defined by the ACEA standard

WARNING : The use of additives in the engine oil is strictly prohibited

Petrol and diesel engines		
Recommended oil (*)	Description	PSA PEUGEOT CITROËN norms
TOTAL QUARTZ INEO FIRST 0W30	Emission control synthetic 0W30	B71 2312
TOTAL QUARTZ INEO FIRST		

0W30	Synthetic 0W30	B71 2302
TOTAL ACTIVA INEO ECS 5W30 TOTAL QUARTZ INEO ECS 5W30	Emission control synthetic 5W30	B71 2290
TOTAL ACTIVA 9000 5W40 TOTAL QUARTZ 9000 5W40	Synthetic 5W40	B71 2296
TOTAL ACTIVA 7000 10W40 TOTAL ACTIVA DIESEL 7000 10W40 TOTAL QUARTZ 7000 10W40 TOTAL QUARTZ DIESEL 7000 10W40	Semi-synthetic 10W40	B71 2300
TOTAL ACTIVA 5000 15W40 and 20W50 TOTAL QUARTZ 5000 15W40 and 20W50	Mineral 15W40 ; 20W50	B71 2295
TOTAL QUARTZ 9000 FUTURE XPC 5W30	Synthetic 5W30	B71 2301
(*) : Or any other oil complying with the PSA PEUGEOT CITROËN norms		

Other lubricants technically complying with the PSA PEUGEOT CITROËN norms.

7 - RESTRICTIONS

NOTE : Reading the engine characteristics

On reception, identify the vehicle by its commercial name.

Read the engine legislative code on the vehicle identification plate consisting of the 3rd, 4th and 5th characters.

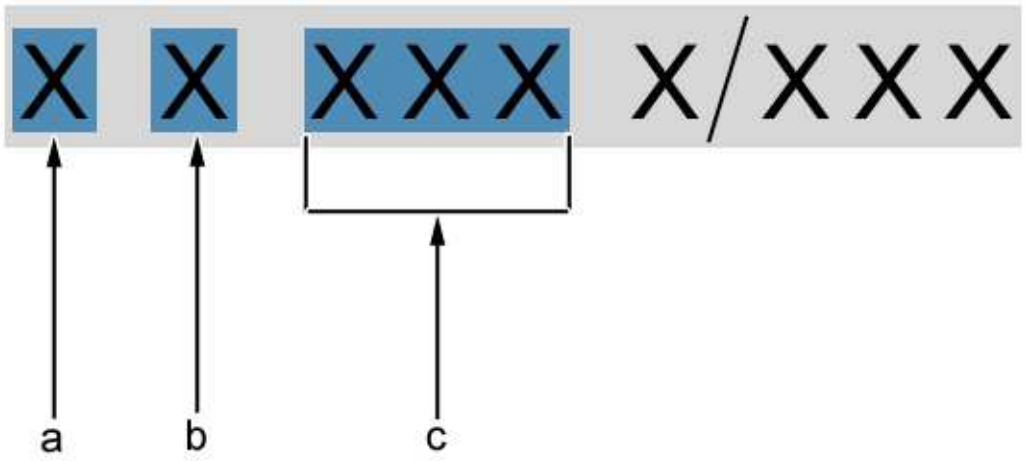

b1fp06ed

"a" Vehicle family.

"b" Body style.

"c" engine(Legislation type).

With the engine legislative code and the country in which the work is to be carried out, identify the engine oil recommendations.

> **WARNING :** Category ACEA 5W30 C2, 0W30 C1/C2 oil must not be used in engines earlier than 2000 (7/99) model year

NOTE : The restrictions linked with the use of a 15W50 oil are identical to those of use of a 10W40 oil

7 - 1 - TU/ET engines

Engine type	Engine identification	5W40 oil	10W40 oil	0W30 oil	5W30 oil
TU1 / TU1A	HFX / HFY / HFZ / HFV	OK	OK	OK	OK
TU3 / ET3 / TU3A	KFW / KFV / K6D / K6E / KFU / K6F / KFX / K6C / KFS / KFT	OK	OK	OK	OK
TU4 M E0	YFZ	-	OK	-	OK
TU4 M E100	YZY	-	-	-	OK
TU5	NFV / NFS / NFU / N6A / NFT / N6B / NFR	OK	OK	OK	OK

7 - 2 - EW engines

Engine type	Engine identification	5W40 oil	10W40 oil	0W30 oil	5W30 oil
EW7J4	6FZ	OK	OK	-	OK
EW7A	6FY	OK	OK	-	-
EW10J4	RFN / RFM /RFP/ RFR	OK	OK	-	OK
EW10A	RFJ / RFH	OK	-	-	-
EW10J4S	RFK	OK	-	-	-
EW12J4	3FZ	OK	OK	-	-
EW12E4	3FY	OK	OK	-	-

7 - 3 - ES engines

Engine type	Engine identification	5W40 oil	10W40 oil	0W30 oil	5W30 oil
ES9J4	XFW / XFZ / XFX	OK	OK	-	OK
ES9A	XFU / XFV	OK	OK	-	OK

7 - 4 - XU engines

Engine type	Engine identification	5W40 oil	10W40 oil	0W30 oil	5W30 oil
XU10J4RS	RFS	OK	-	-	-

7 - 5 - TOYOTA engines

Engine type	Engine identification	15W40 oil	5W40 oil	10W40 oil	0W30 oil	5W30 oil
384F	CFA / CFB	OK	OK	OK	OK	OK
1KR-FE	CFB	-	-	OK	-	OK

7 - 6 - MITSUBISHI engines

Engine type	Engine identification	5W40 oil	10W40 oil	0W30 oil	5W30 oil
2.4 MMC	SFZ / SFY	OK	OK	OK	OK
2.0 MMC	AFZ / AFX / FZ9 / FZP / AFY / FZC / FZH	OK	OK	OK	OK
1.8 D MMC	6HZ / 6HY	-	-	OK	OK
1.6 MMC	NKZ	OK	OK	OK	OK

7 - 7 - EP engines

Engine type	Engine identification	5W40 oil	10W40 oil	0W30 oil	5W30 oil
EP 3	8FS	-	-	OK	OK

EP 3C	8FP / 8FR / 8FN	-	-	OK	OK
EP 6	5FW / 5FP	-	-	OK	OK
EP 6C	5FS / 5FK / 5FL / 5FJ / 5FH	-	-	OK	OK
EP 6DT	5FX / 5FT / 5FR / 5F4	-	-	OK	-
EP 6DTS	5FY / 5FF / 5FD	-	-	OK	-
EP 6CDT	5FN / 5FV / 5F2 / 5FA	-	-	OK	-
EP 6CDTX	5FU / 5FB	-	-	OK	-
EP 6CDTM	5FE / 5FC / 5FM	-	-	OK	-
EP6CDTR	5FG	-	-	OK	-
EP6FDT	5GZ	-	-	OK	-
EP6FDTM	5GY	-	-	OK	-
EP6FDTMD	5GX	-	-	OK	-
EP6FDTX	5GR	-	-	OK	-

7 - 8 - DV engines

Engine type	Engine identification	5W40 oil	10W40 oil	0W30 oil	5W30 oil
DV4C	8HR / 8HP	-	-	OK	OK
DV4TD	8HT / 8HZ / 8HX	OK	OK	OK	OK
DV4TED	8HS	OK	OK	OK	OK
DV4TED4	8HV / 8HY	OK	OK	OK	OK
DV6ATED4 / DV6AUTED4	9HX	OK	OK	OK	OK
DV6TED4	9HY	OK	OK	OK	OK
DV6BTED4 / DV6BUTED4	9HW / 9HT	OK	OK	OK	OK
DV6TED4 with particle filter	9HZ	OK	OK	OK	OK
DV6UTED4	9HU	OK	OK	OK	OK
DV6TED4BU with particle filter	9HS	OK	OK	OK	OK
DV6TED4B with particle filter	9HV	OK	OK	OK	OK
DV6C / DV6UC	9HR / 9HC / 9HM / 9HL / 9HD	-	-	OK	OK
DV6C M	9HG	OK	-	OK	-
DV6D	9HP / 9HF	-	-	OK	OK
DV6D M	9HE / 9HJ	OK	-	OK	-
DV6DU M	9HH	OK	-	OK	-
DV6E	9HN	-	-	OK	OK
DV6E M	9HK	OK	-	OK	-

DV6FC	BHZ / BHX	-	-	OK	-
DV6FD	BHY	-	-	OK	-
DF6FE	BHW	-	-	OK	-

7 - 9 - DW engines

Engine type	Engine identification	5W40 oil	10W40 oil	0W30 oil	5W30 oil
DW10TD	RHY /RHV / RHU	OK	OK	-	OK
DW10ATED	RHZ	OK	OK	-	OK
DW10ATED4	RHW	OK	OK	-	OK
DW10ATED with particle filter	RHS	OK	OK	-	OK
DW10ATED4 with particle filter	RHT/ RHM	OK	OK	-	OK
DW10BTED	RHX	OK	OK	-	OK
DW10BTED4 with particle filter	RHR / RHL / RHJ	OK	OK	-	OK
DW10BTED4 euro 5 with particle filter	RHF	OK	OK	-	OK
DW10UTED4	RHK	OK	OK	-	OK
DW10UTED4 with particle filter	RHG	OK	OK	-	OK
DW10CTED4	RHE /RHH / RHD / AHY / AHZ /RHB / RHC	-	-	OK	OK
DW10FD	AHX / AHV / AHR / AHS	-	-	OK	-
DW10FC	AHW	-	-	OK	-
DW12BTED4 with particle filter	4HP / 4HR / 4HS / 4HT	OK	OK	-	OK
DW12C	4HL	-	-	OK	OK
DW12UTED	4HY	OK	OK	-	OK
DW12TED4 with particle filter	4HW / 4HX / 4HZ	OK	OK	-	OK
DW12MTED4 with particle filter	4HN	OK	OK	-	OK
DW12MTED4 with particle filter	4HK	-	-	-	OK
DW8	WJZ	OK	OK	-	OK
DW8B	WJY / WJX	OK	OK	-	OK

7 - 10 - DT engines

Engine type	Engine identification	5W40 oil	10W40 oil	0W30 oil	5W30 oil
DT17	UHZ	OK	OK	-	OK
DT20	X8Z	-	-	OK	OK

7 - 11 - PUMA engines

Engine type	Engine identification	5W40 oil	10W40 oil	0W30 oil	5W30 oil
P22DTE	4HV / 4HU / 4HM	OK	OK	-	OK
PUMA C	4HG / 4HH / 4HJ / 4HF	-	-	-	OK

7 - 12 - SOFIM engines

Engine type	Engine identification	5W40 oil	10W40 oil	0W30 oil	5W30 oil
F28DT	8140.43S / 8040.23	OK	OK	-	OK
F28DTGV	8140.43 N	OK	OK	-	OK
F30DTE	F1CE0481D / F1CE3481DM /	OK	OK	-	OK
F30DTE	F1CE348IN / D / E	-	-	-	OK

7 - 13 - FIAT engines

Engine type	Engine identification	5W40 oil	10W40 oil	0W30 oil	5W30 oil
1.3 HDi 75	FHZ	-	-	-	OK

7 - 14 - EB engines

Engine type	Engine identification	5W40 oil	10W40 oil	0W30 oil	5W30 oil
EB0	ZMZ	OK	OK	OK	OK
EB2	HMX / HMW / HMZ / HMT / HMU	OK	OK	OK	OK
EB2 M	HMY	OK	OK	OK	OK
EB2DTS	HNY	-	-	OK	-
EB2DT	HNZ	-	-	OK	-

7 - 15 - EC engines

Engine type	Engine identification	5W40 oil	10W40 oil	0W30 oil	5W30 oil
EC5	NFP / NFN	OK	-	OK	OK

8 - GEARBOX OIL

Type of gearbox	Country	Type of oil
Manual gearboxes Hybrid rear reducer Partner / BERLINGO B9 : Electrical	All countries	TOTAL TRANSMISSION BV 75W80 (Parts reference : 9730 A2)
		Special oil (Parts reference :

		9730 AG)
MCP / MTA piloted gearbox actuator	All countries	Special oil (Parts reference : 9979 A4)
Gearboxes (Type MMT)	All countries	Special oil 75 W (Parts reference : 9730 A8)
MB3 / 4HP14 / 4HP18 automatic gearbox	All countries	TOTAL (AT 42) FLUID (Parts reference : 9730 A6)
		Special oil (Parts reference : 9730 AC)
4HP20 and AL4 automatic gearboxes	All countries	Special oil (Parts reference : 9730 AE)
AM6 automatic gearbox	All countries	Special oil (Parts reference : 9730 AF)
AM6-2 - AT6 automatic gearbox	All countries	Special oil (Parts reference : 9734 R7)
Transfer box - Rear axle	All countries	TOTAL TRANSMISSION 4X4 (Parts reference : 9730 A7)
Constant variation gearbox CVT	All countries	Special oil (Parts reference : 9735 EF)
Piloted manual gearbox DCT	All countries	Special oil (Parts reference : 9734 S2)
Motor (CITROËN C-Zéro / PEUGEOT Ion)	All countries	Special oil (Parts reference : 9979 A7)

REMOVING - REFITTING : DRIVE SHAFT SEALS

ESSENTIAL : Observe the safety and cleanliness recommendations

1 - TOOLING

tool	Reference	Designation
[6310-T1] 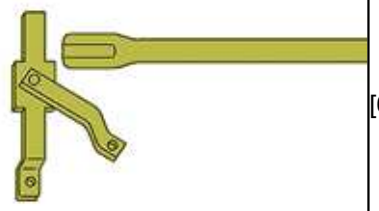 *e5ab06yt*	[6310-T]	hub immobilising tool
[9509-T]  *e5ag04zt*	[9509-T]	pivot ball-joint uncoupling lever
[0349-A]  *e5ab0eft*	[0349-A]	Mandrel for fitting gearbox LH output lip seal
	[0349-E]	transfer box outlet lip seal fitting drift

[0349-E]  *e5ab0egt*		
[0349-B]  *e5ab1jht*	[0349-B]	Mandrel for fitting gearbox RH output lip seal

2 - REMOVING

Chock and lift the vehicle on a 2 column lift.

Drain gearbox.

> **NOTE :** It is not necessary to drain the transfer box in order to remove the front right and front left driveshafts

Remove the front wheels.

2 - 1 - Left and right hand drive shafts

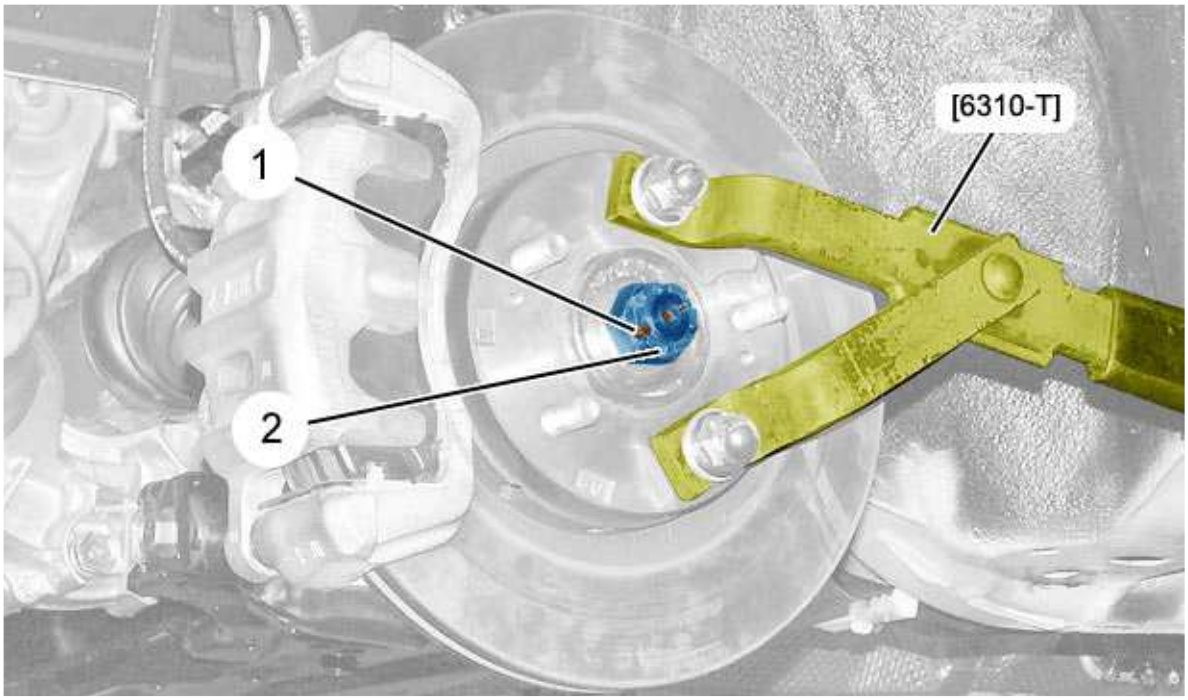

b2cg0sud

Fit the tool [6310-T].

Remove (on each side) :

- The pin (1)
- The drive shaft nut (2)
- The washer

> **WARNING :** Never brake to slacken the drive shaft nut

Remove the tool [6310-T].

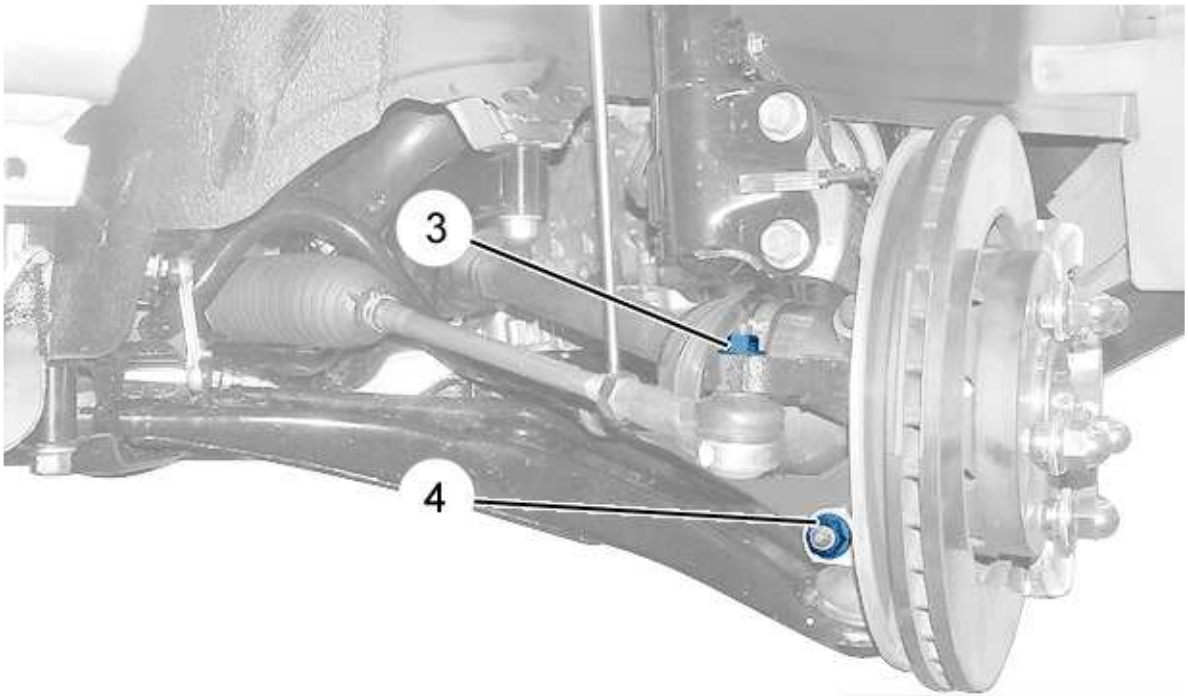

b3cm00rd

Remove (on each side) :

- The nut (3)
- The nut (4)

Uncouple (on each side) :

- The steering ball joint
- The pivot lower ball-joint ; Using tool [9509-T]

Move the strut towards the outside.

Release the drive shafts from the hub.

2 - 2 - L.H. driveshaft



b2fm00td

WARNING : Do not damage the lip seal

Unclip the left-hand drive shaft.

2 - 3 - Right hand drive shaft

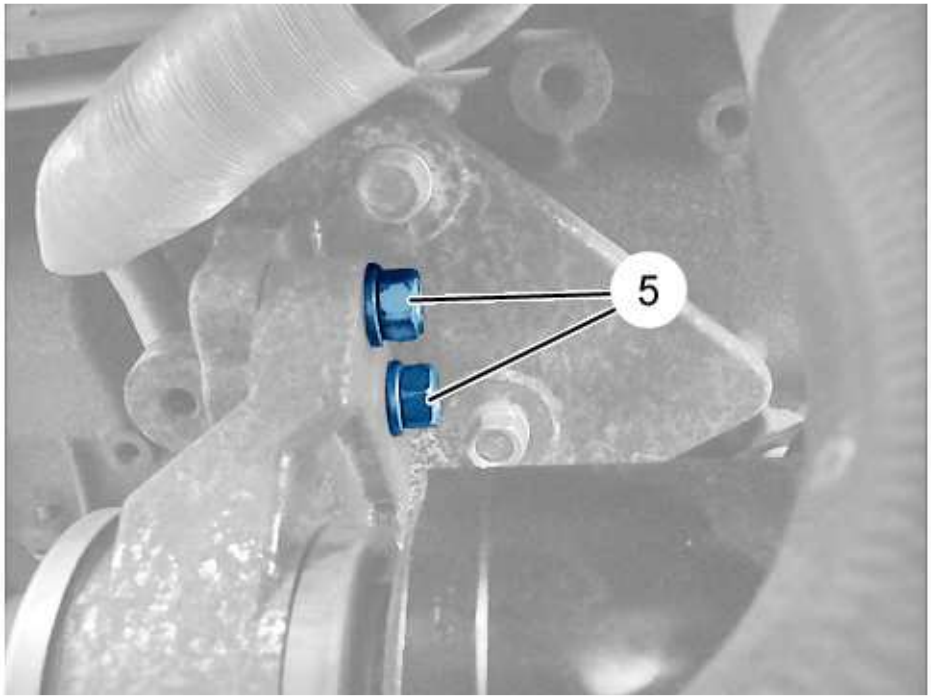

b2cg0syd

WARNING : Adhere to the tightening torques

Remove the bolts (5).

2 - 4 - Gearbox outlet lip seals (On the right-hand side)

Remove the transfer box.

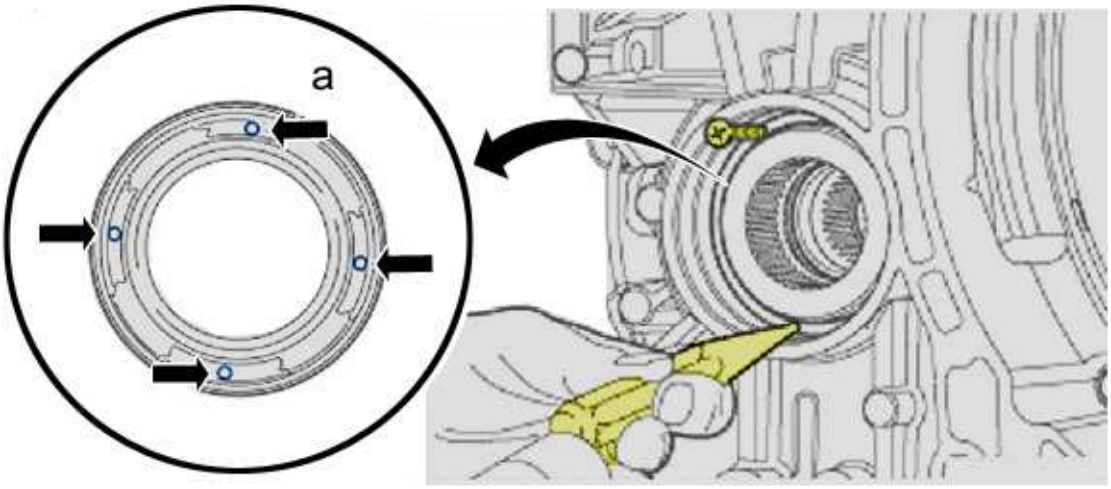

b2cg2zld

Pierce the gearbox outlet lip seals (at "a") ; Using the 2 screws .

Remove the gearbox outlet lip seals ; Using pliers.

3 - REFITTING

3 - 1 - Gearbox outlet lip seals (On the right-hand side)

Replace the gearbox outlet lip seals ; Using tool [0349-B].

[0349-B]



b2cg2znd

Position the 2 gearbox outlet lip seals on the tool [0349-B].

Oil the tool [0349-B].

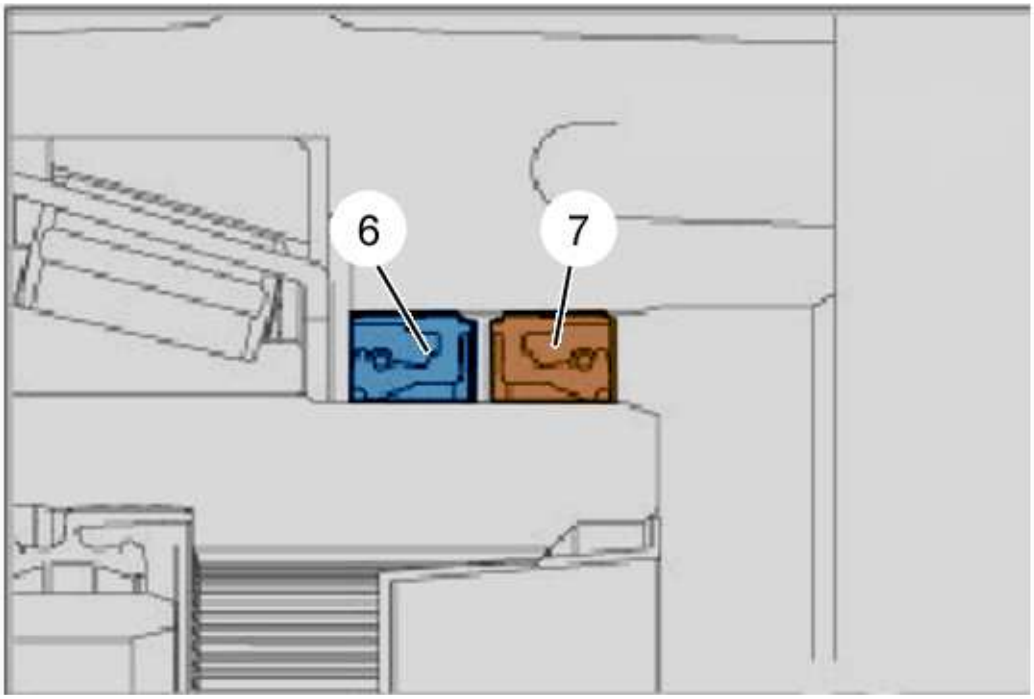

b2cg2zmd

Refit :

- The gearbox outlet lip seal (6) right side out ; Using tool [0349-B]

- The gearbox lip seal (7) inside out ; Using tool [0349-B]
- The transfer box

3 - 2 - Drive shaft seals



b2cg2zod

Replace :

- The gearbox outlet lip seal ; Using tool [0349-A]
- The transfer box outlet lip seal ; Using tool [0349-E]
- The Nylstop nuts (3)

Check :

- The absence of play in the driveshaft joints
- The condition of the drive shaft gaiters

Overhaul the driveshafts (if necessary).

Replace the circlip (8).

Refit the driveshafts in the wheel hubs.

Re-attach the driveshaft on the gearbox.

Couple up (on each side) :

- The steering ball joint
- The pivot lower ball-joint ; Using tool [9509-T]

Tighten (on each side) :

- The nut (3) to 2,5 m.daN
- The nut (4) to 7,1 m.daN
- The bolts (5)

Refit (on each side) :

- The drive shaft nut (1) ; Tighten to 16 daN.m
- The pin (2)
- The wheel ; Tighten to 10 daN.m

Fill the gearbox.

DISMANTLING - RE-ASSEMBLY : STARTER

ESSENTIAL : Observe the safety and cleanliness recommendations

1 - REMOVING

Place the vehicle on a lift.

Disconnect the ancillaries battery.

ESSENTIAL : Wait at least one hour before carrying out any work on the exhaust line

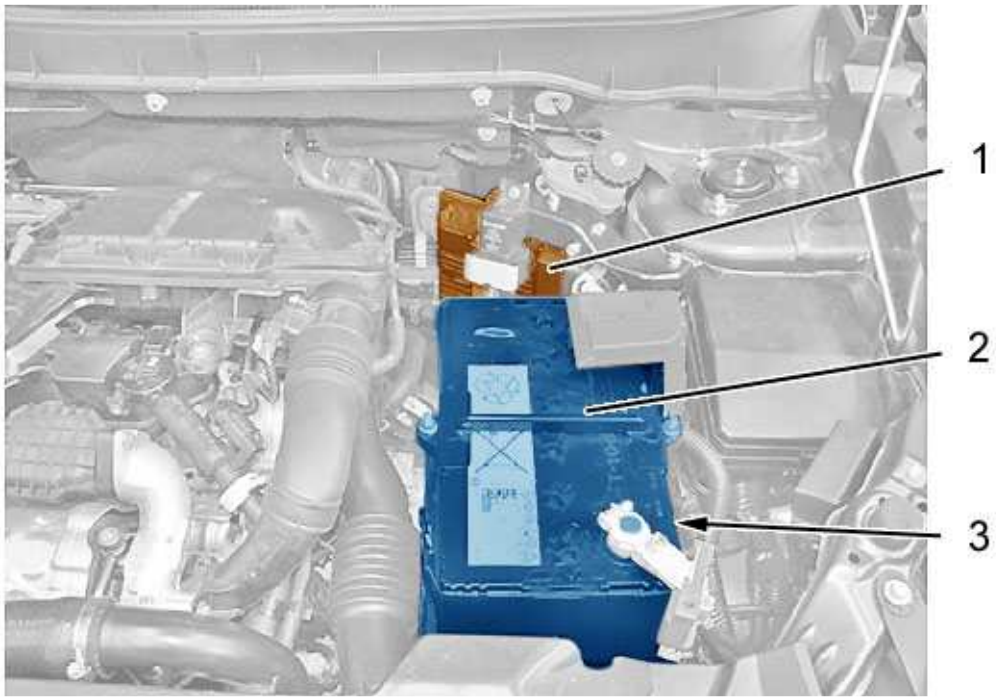

b1bg3dkd

Remove :

- The ancillaries battery (2)
- The ancillaries battery tray (3)
- The engine management ECU (1)
- The service battery tray support

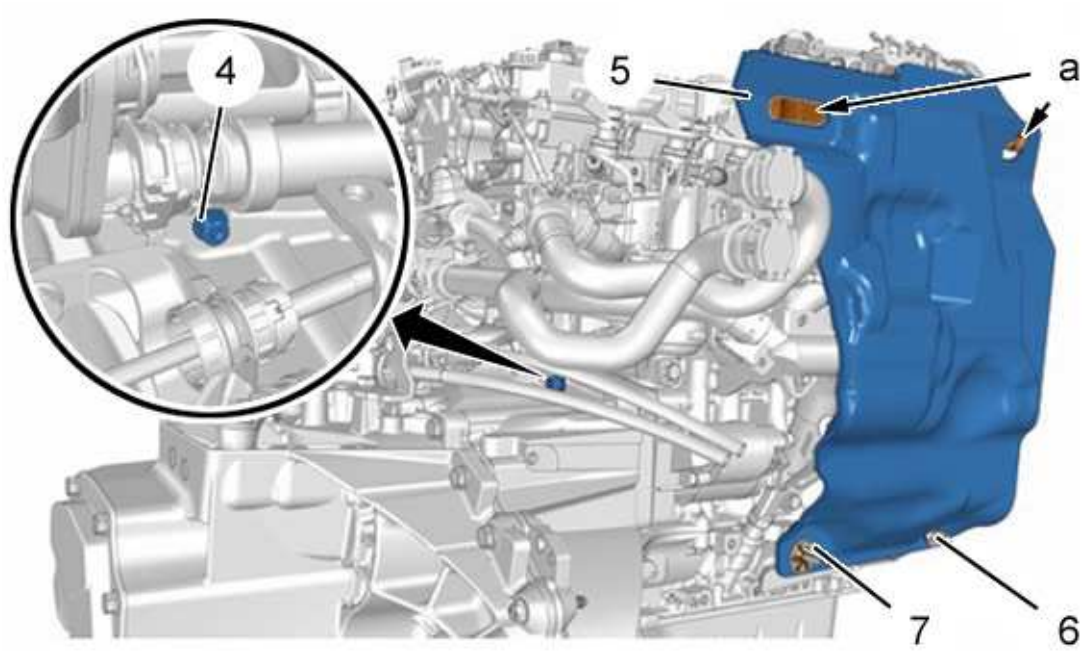

b1bg3dld

Remove :

- The bolt (4) (from above)
- The protective panel under the engine

Release the clips (6), (7).

Detach : The acoustic shield (5) (at "a").

Remove : The acoustic shield (5)(Upwards).

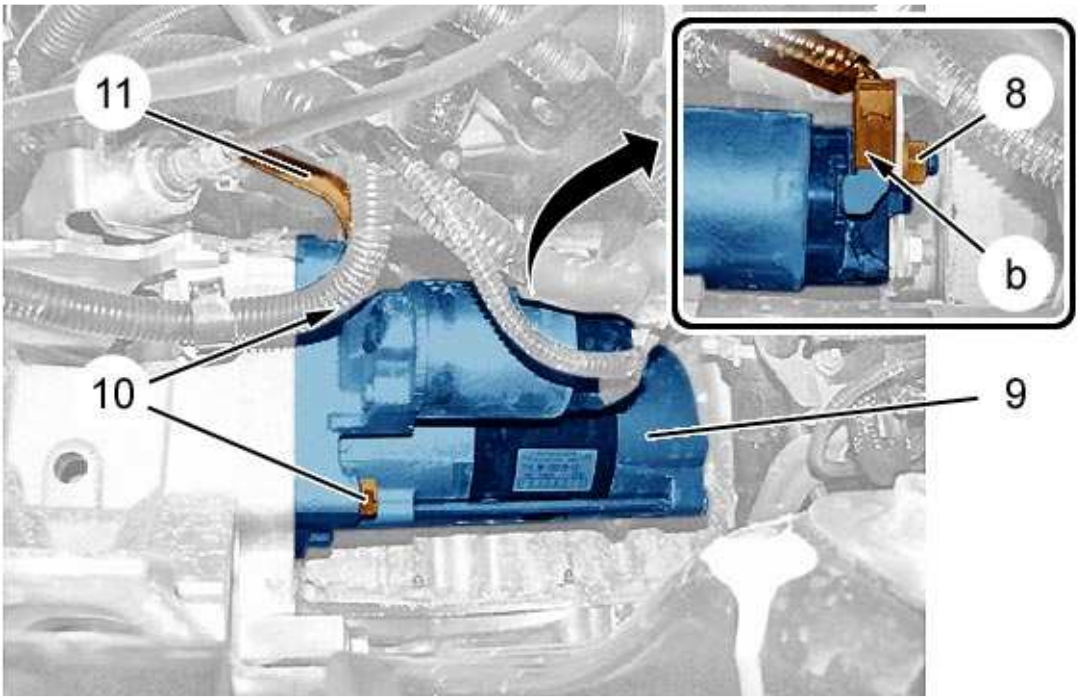

d1bg07yd

Disconnect the connector (at "b").

Remove the starter supply cable (9) nut (8).

Move aside the starter electrical harness .

Remove the 2 bolts (10).

Move aside the electrical harness support (11).

Remove the starter motor (9).

2 - REFITTING

> **WARNING :** Adhere to the tightening torques

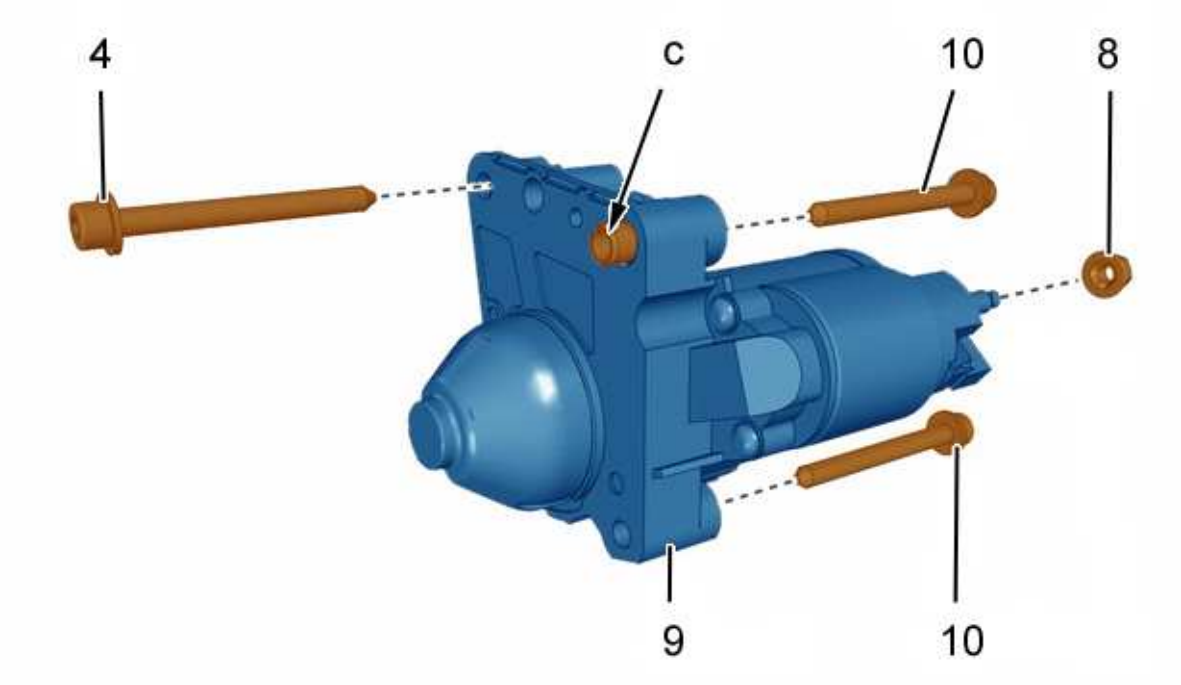

d1bg07zd

WARNING : Check that the centring pin is present (at "c")

Refit :

- The starter motor (9)
- The harness bracket (11)
- The 2 bolts (10)
- The starter electrical harness
- The starter supply wire (8) nut (9)

Connect the connector (at "b").

Refit the acoustic shield (5) (at "a").

Clip in place : The clips (6), (7).

Refit :

- The protective panel under the engine
- The (4) bolt (from above)

Refit :

- The service battery tray support
- **The engine management ECU (1)**
- The ancillaries battery tray (3)
- **The ancillaries battery (2)**

WARNING : Perform the operations that are required following a reconnection of the ancillaries battery

Reconnect the ancillaries battery.

LOCATION : ENGINE HARNESS

WARNING : Disconnect the ancillaries battery : Before carrying out any work on the engine harness

WARNING : After the ignition has been switched off : Wait 15 minutes before disconnecting the battery to ensure that the programmed values of the various ECUs are stored

1 - ASSEMBLY : ENGINE HARNESS

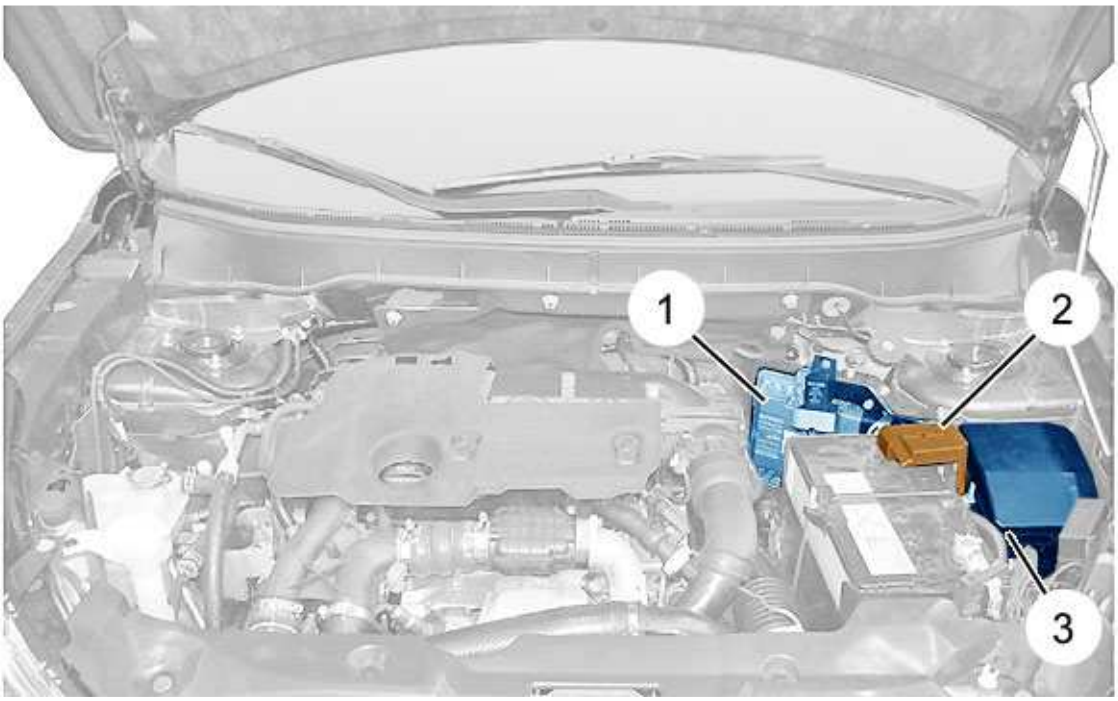

d6ab056d

(1) Engine management ECU.

(2) fuse box (according to equipment).

(3) Engine fusebox.

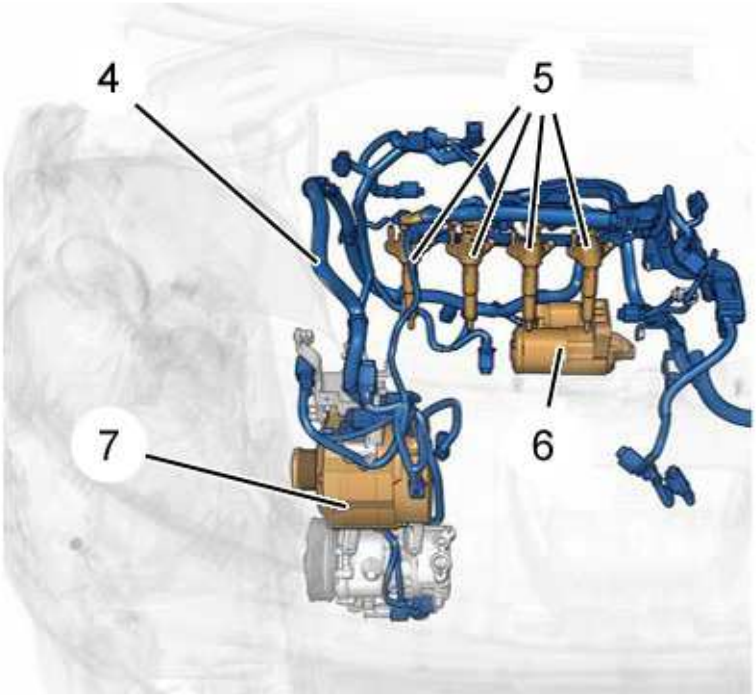

d6ab057d

(4) Engine harness .

(5) diesel injectors.

(6) Starter.

(7) alternator.

2 - ENGINE HARNESS : ON ENGINE

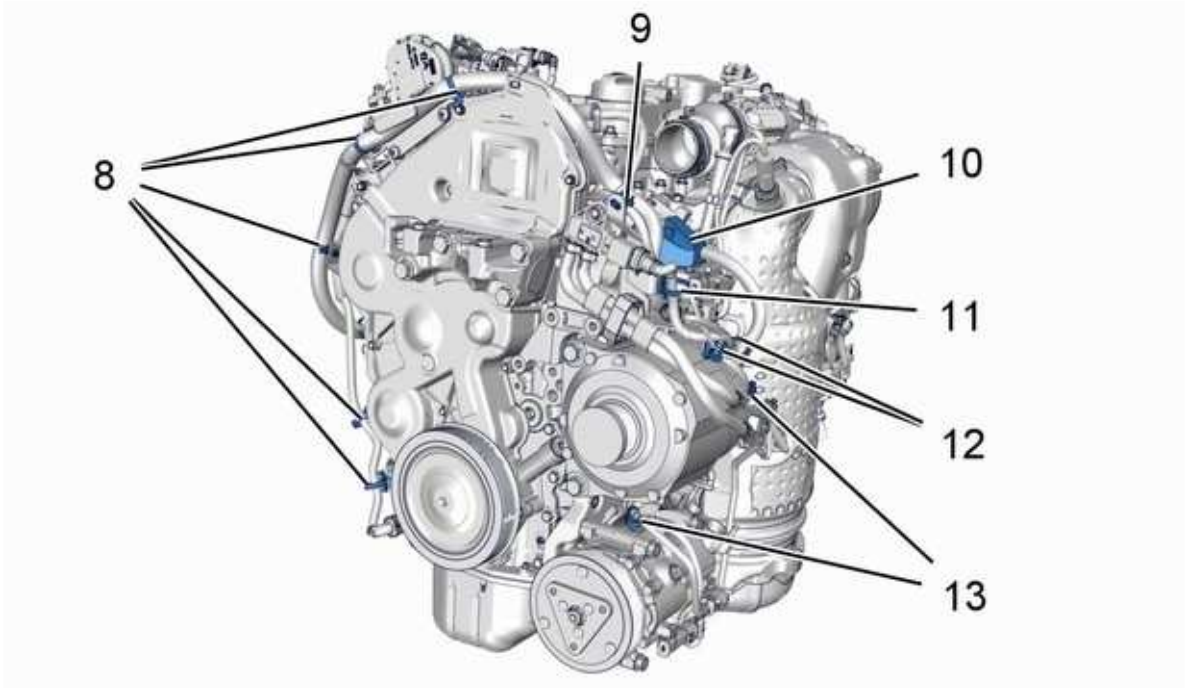

b1cb01rd

(8) Clips (According to equipment).

(9) Clip .

(10) Engine harness sheathing.

(11) Ties.

(12) Clips (According to equipment).

(13) Ties (According to equipment).

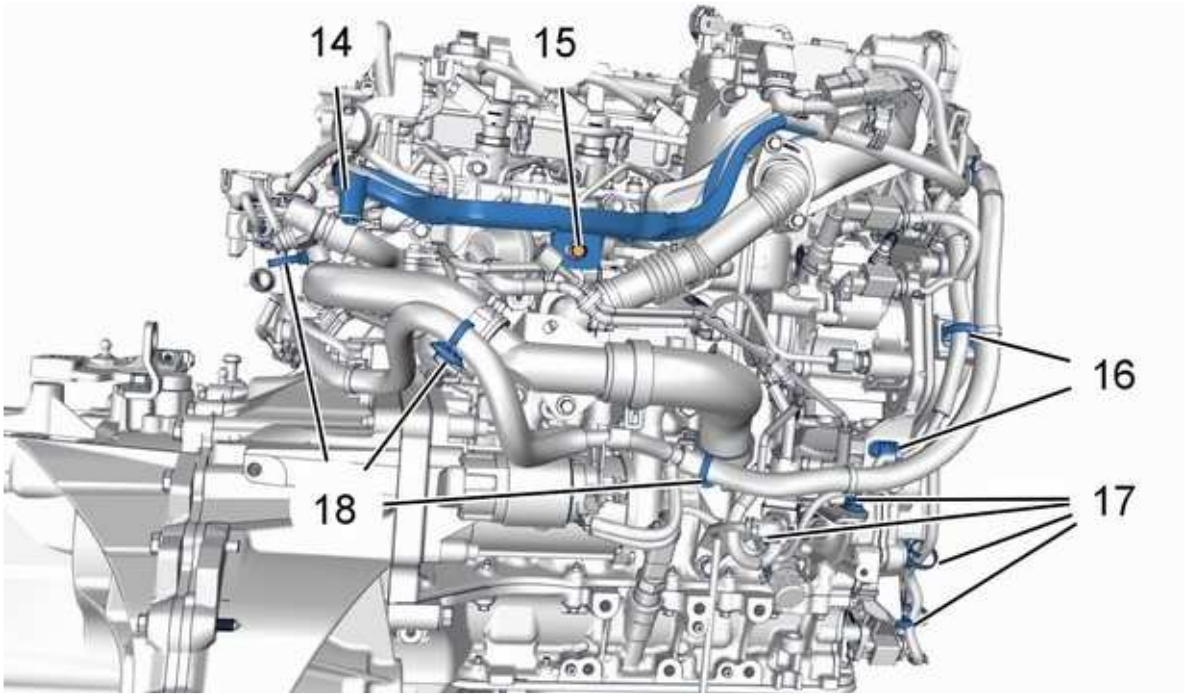

b1bb0nbd

(14) Engine harness sheathing.

(15) Sheathing on exhaust recirculation module fixing bolt.

(16) Clips (According to equipment).

(17) Clips (According to equipment).

(18) Clips (According to equipment).

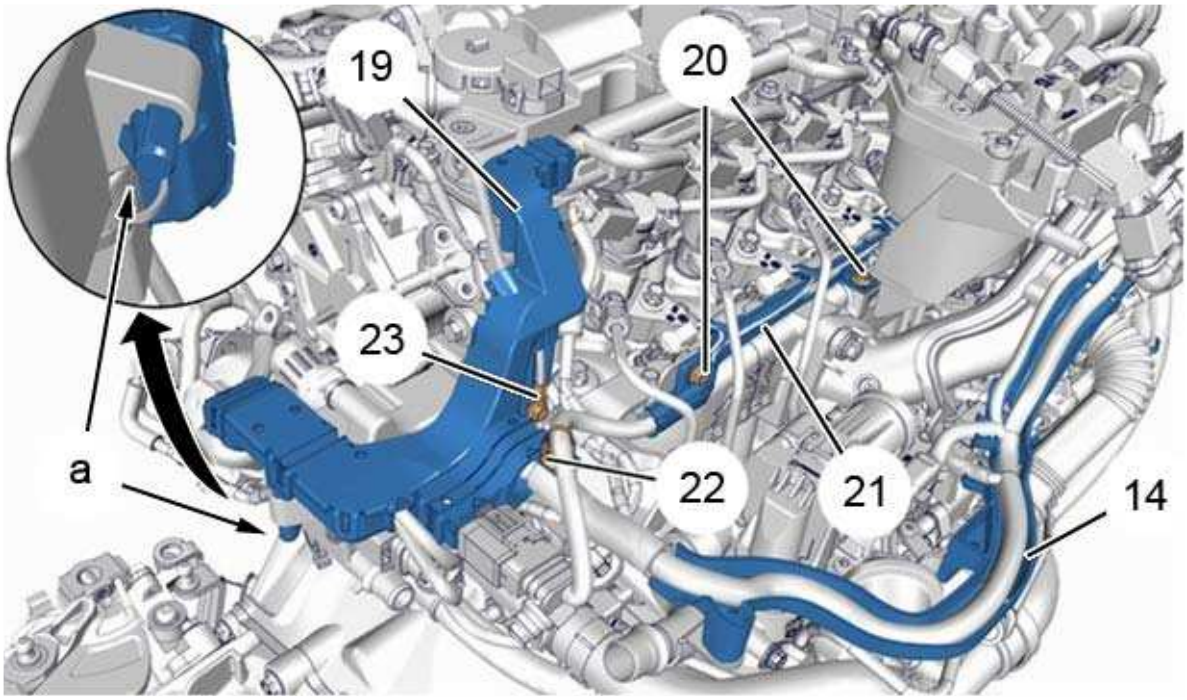

b1bb0ncd

"a" Engine harness sheathing lock.

(14) Engine harness sheathing.

(19) Engine harness sheathing.

(20) Pre-heat glow plugs harness fixing bolt.

(21) Pre-heat glow plugs harness.

(22) Clip (According to equipment).

(23) Sheathing on engine block fixing bolt.

CHECK : LOW PRESSURE FUEL SUPPLY CIRCUIT (SIEMENS INJECTION)

ESSENTIAL : Observe the safety and cleanliness recommendations

1 - TOOLING

tool	Reference	Designation
[1604-A] [4073-T.A] 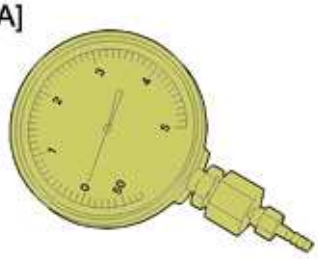 *e5ab0vkt*	[1604-A] [4073-T.A]	pressure gauge for checking the turbocharging pressure
[1604-C] [4215-T] 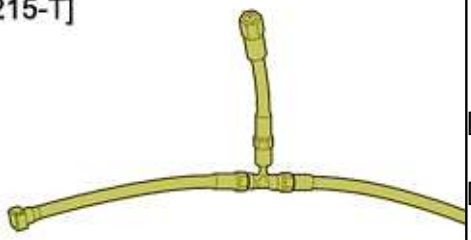 *e5ab0vlt*	[1604-C] [4215-T]	Ø 10 mm union for low pressure plug
[1604-G] [4251-T]  *e5ab0vmt*	[1604-G] [4251-T]	Extension

2 - CHECK

WARNING : Respect the safety and cleanliness recommendations that are specific to high pressure diesel injection (HDi) engines

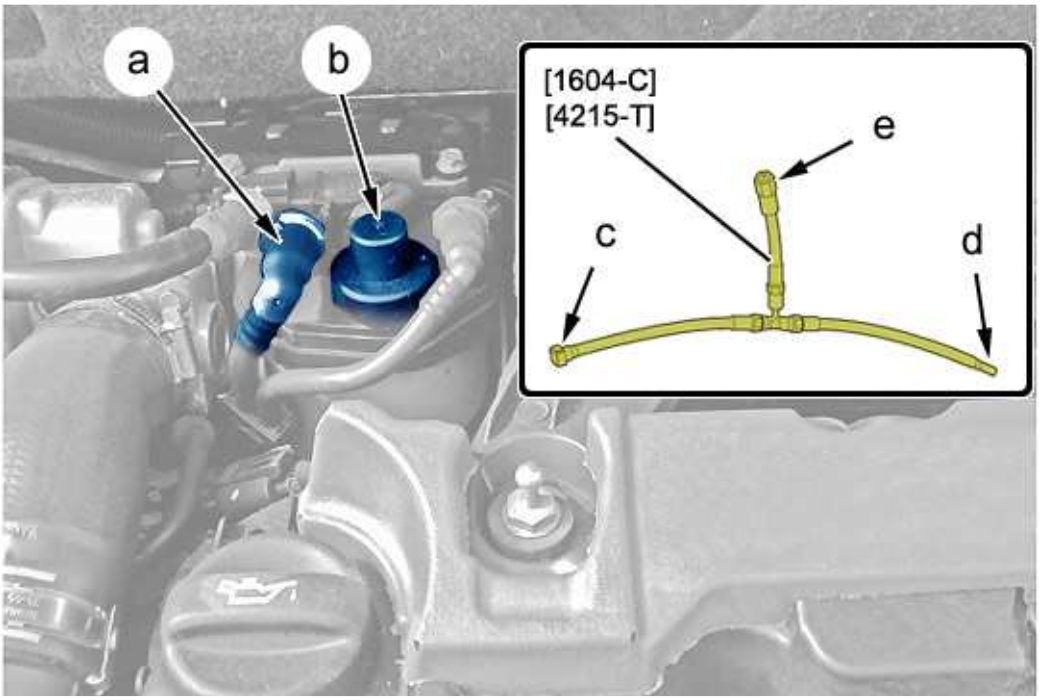

b1hdzl9d

Remove the engine style cover (according to equipment).

> **WARNING :** Before uncoupling, clean all the unions on the low pressure circuit (if necessary)

Uncouple the low pressure pipe union (at "a") ; Using a flat screwdriver.

> **WARNING :** Check the cleanliness of the tools [1604-A / 4073-T.A], [1604-C / 4215-T], [1604-G / 4251-T]

> **NOTE :** An extension [1604-G / 4251-T] may be used in order to obtain a reading from the passenger compartment (at "e")

Connect with a by-pass circuit tools 1604-A / 4073-T.A and 1604-C / 4215-T between the fuel high pressure pump and the fuel filter (at the fuel filter outlet) (at "c", "d").

Secure the tool [1604-A / 4073-T.A] so that it is immobilised during taking of measurements.

Prime the circuit using the manual priming pump, so as not to falsify the measure (at "b").

Switch on the ignition.

Start the engine.

Check the low-pressure fuel pressure values.

3 - REFITTING

Remove the tools [1604-A / 4073-T.A], [1604-C / 4215-T], [1604-G / 4251-T].

Connect the union to the low-pressure fuel pipe (at "a").

Refit the engine style cover (according to equipment).

Operate the manual priming pump for 120 seconds to prime the fuel circuit (at "b").

4 - CHECKING THE SEALING OF THE CIRCUIT

Start the engine.

Allow the engine to idle for 2 minutes.

Check :

- Note down or print out the parameters so that you can re-write them in the new ECU
- That there are no air bubbles in the return circuit

CHECK : VACUUM CIRCUIT

ESSENTIAL : Observe the safety and cleanliness recommendations

1 - TOOLING

tool	Reference	Designation
[DA16] 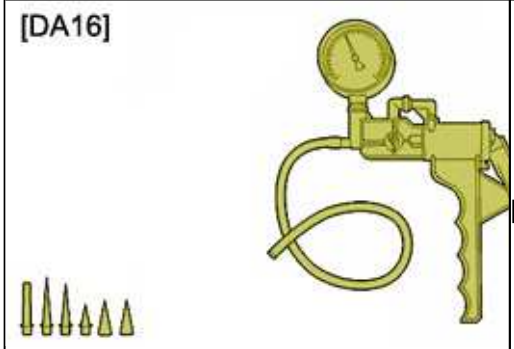 *e5ab0hwt*	[DA16]	Manual pressure-vacuum pump with adaptors

2 - VACUUM CIRCUIT

2 - 1 - Versions DV6C, DV6D, DV6E and DV6UC

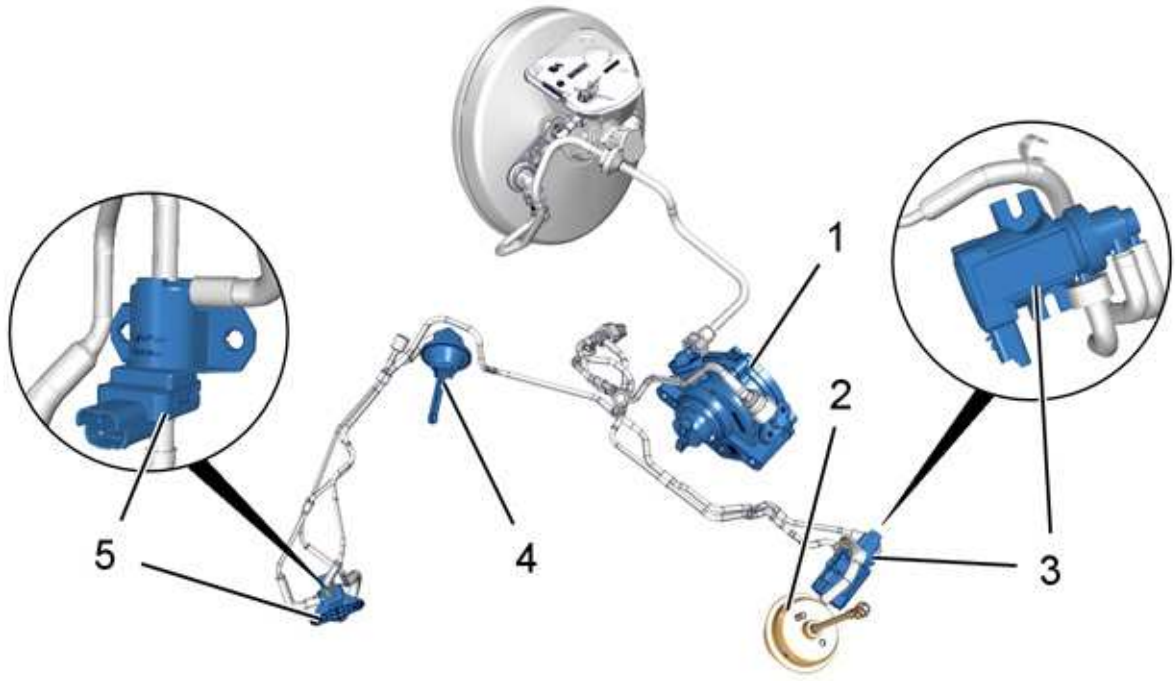

b1hdz9kd

(1) Vacuum pump .

(2) Control capsule - Turbocharger wastegate valve.

(3) Turbocharging pressure regulation control electrovalve .

(4) Control capsule - Control circuit for the exhaust gas cooler by-pass flap.

(5) Electrovalve controlling the EGR exchanger by-pass.

2 - 2 - DV4C version

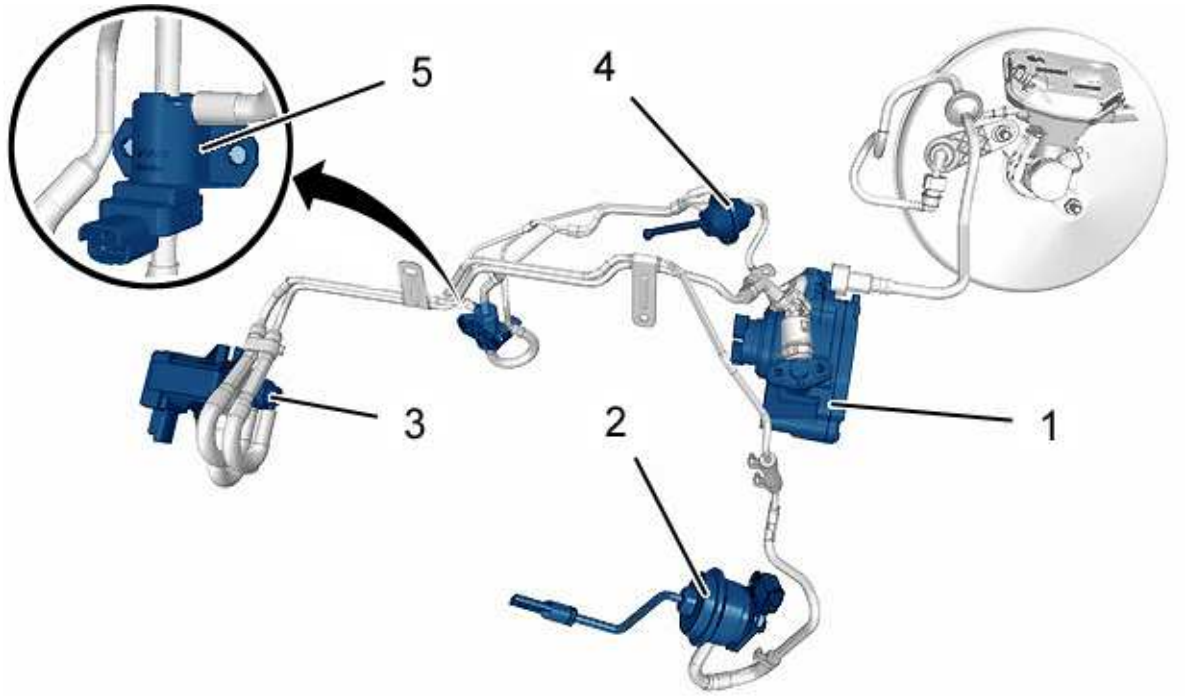

b1hdzead

(1) Vacuum pump .

(2) Control capsule - Turbocharger wastegate valve.

(3) Turbocharging pressure regulation control electrovalve .

(4) Control capsule - Control circuit for the exhaust gas cooler by-pass flap.

(5) Electrovalve controlling the EGR exchanger by-pass.

2 - 3 - Versions DV6CM, DV6DM, DV6DUM and DV6EM

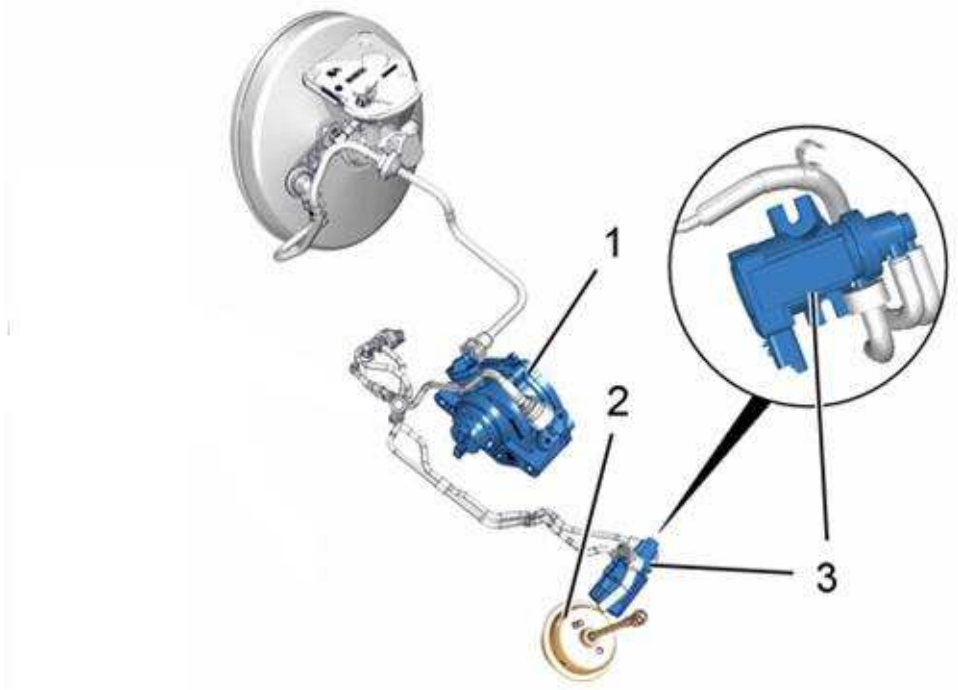

b1hdzfyd

(1) Vacuum pump .

(2) Control capsule - Turbocharger wastegate valve.

(3) Turbocharging pressure regulation control electrovalve .

3 - VACUUM SOURCE CHECKS (VACUUM PUMP)

Check the effectiveness of the vacuum pump (1).

NOTE : If the values are not correct : Replace the component that is faulty

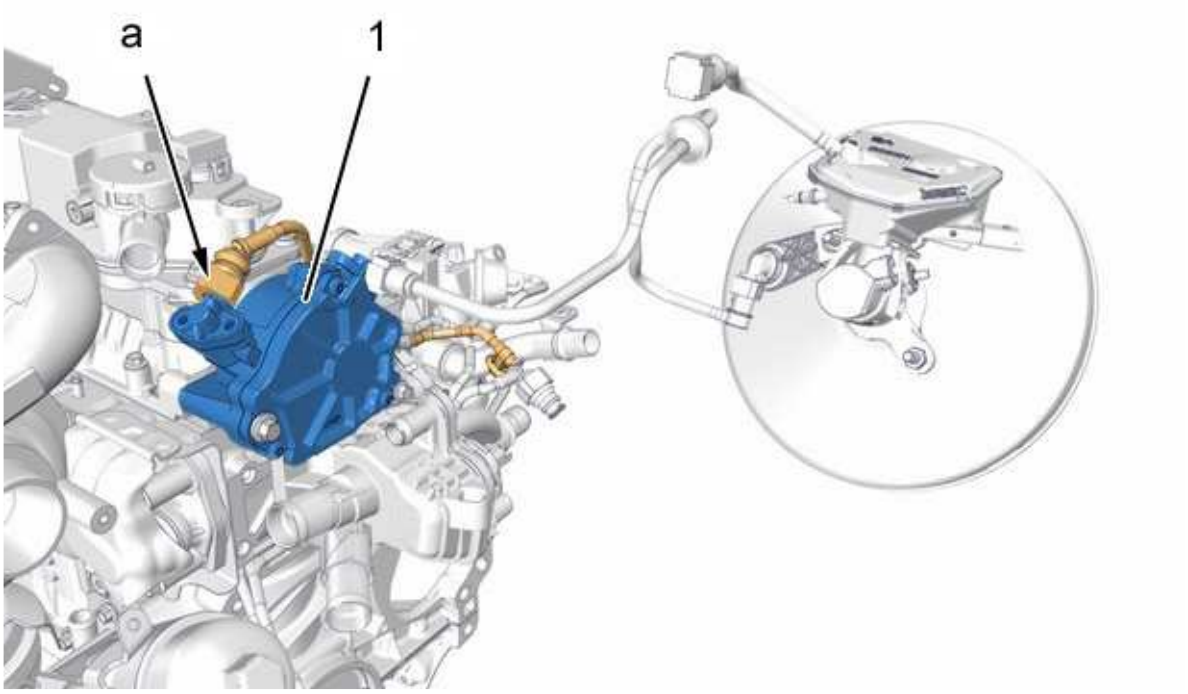

b1hdzebd

Uncouple the vacuum pipe (at "a").

Connect the tool [DA16] to the vacuum pump (1) (at "a").

Start the engine.

Wait 30 seconds.

NOTE : The vacuum value should be 0,8 ± 0,1 bar at idling speed

Stop the engine.

Remove the tool [DA16].

Couple the vacuum pipe (at "a").

4 - CHECK : TURBOCHARGING PRESSURE REGULATION CONTROL CIRCUIT

4 - 1 - Using the diagnostic equipment

Start the engine (for one minute).

NOTE : The engine must be switched on in order to create the air vacuum in the circuit (The check is carried out with the engine off)

Lift and support the vehicle.

Remove the under engine protection .

Carry out : An actuator test (Turbocharger pressure regulation electrovalve) ; Using the diagnostic equipment.

Check the movement of the control rod on the turbocharger .

If the control rod does not move : Check the following points :

- The sealing of the vacuum circuit (Porous pipes, cracked pipes)
- Vacuum circuit not obstructed (Pipes blocked, kinked)

Carry out all the following checks ; Using tool [DA16].

4 - 2 - Check : Control capsule - Turbocharger wastegate valve (DV6C, DV6CM version)

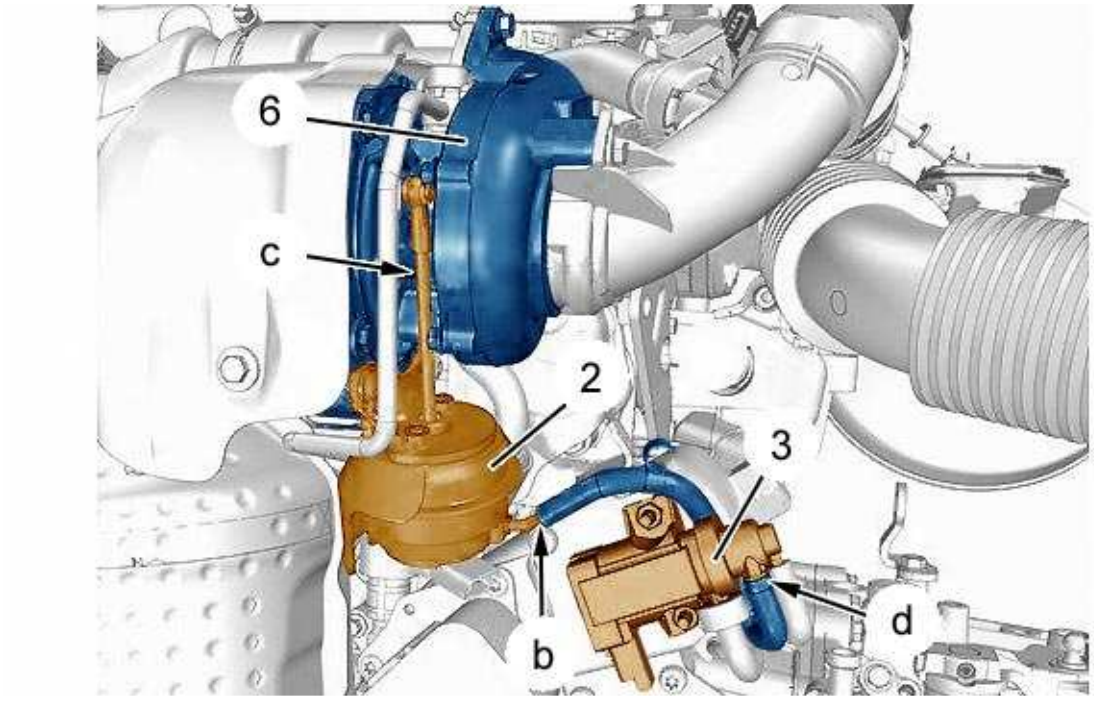

b1hdzixd

Uncouple the vacuum pipe (at "b").

Connect the tool [DA16] on the turbocharger wastegate valve (2) (at "b") on the turbocharger (6).

Apply a vacuum of approximately 0,8 bar.

NOTE : The control rod "c" on the turbocharger should move 12 ± 2 mm

WARNING : If the control rod "c" does not move ; Replace the turbocharger (6) (see the relevant operation) If not : Carry out the following check

Remove the tool [DA16].

Connect the negative pressure pipe (at "b").

Refit the under-engine protection .

4 - 3 - Check : Control capsule - Turbocharger wastegate valve (Versions DV4C, DV6UC, DV6UDM, DV6D, DV6DM, DV6E and DV6EM)

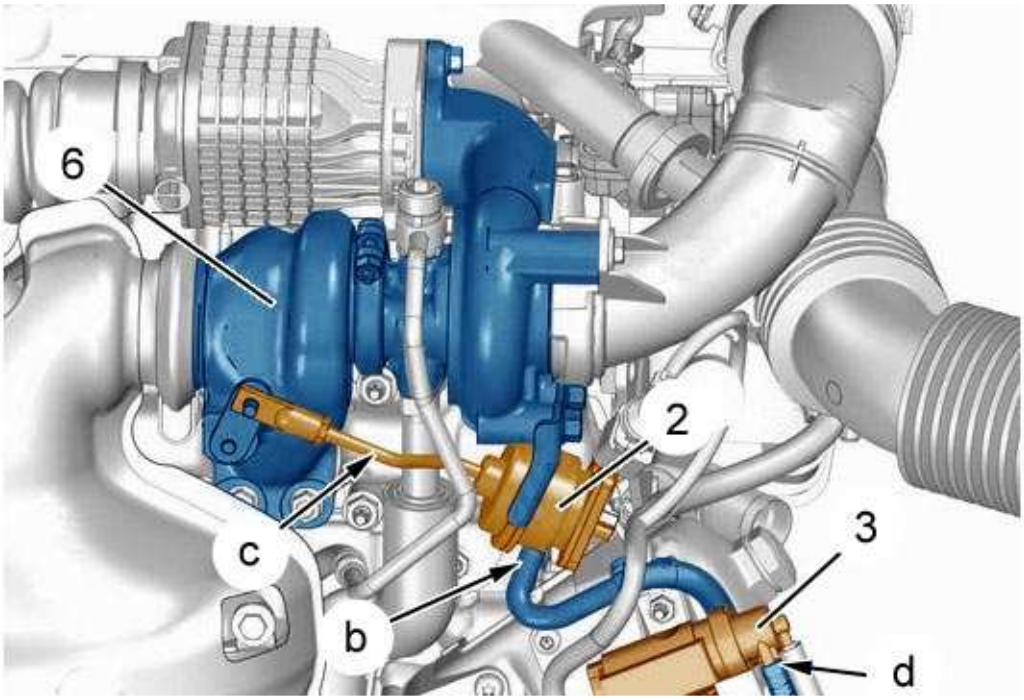

b1hdziyd

Remove : The turbocharger upper heat shield (6).

Uncouple the vacuum pipe (at "b").

Connect the tool [DA16] on the turbocharger wastegate valve (2) (at "b") on the turbocharger (6).

Apply a vacuum of approximately 0,25 bar.

NOTE : The control rod "c" on the turbocharger should move 6 ± 1 mm

WARNING : If the control rod "c" does not move ; Replace the turbocharger (6) (see the relevant operation) If not : Carry out the following check

Remove the tool [DA16].

Connect the negative pressure pipe (at "b").

Refit : The turbocharger upper heat shield (6).

Refit the under-engine protection .

4 - 4 - Check : Turbocharging pressure regulation control electrovalve

Connect the tool [DA16] to the turbocharging pressure regulation control electrovalve (3) outlet (at "d").

Start the engine (for one minute).

> **NOTE :** The engine must be switched on in order to create the air vacuum in the circuit.
> The check is carried out with the engine off

Carry out : An actuator test (Turbocharging pressure regulation control electrovalve) ; Using the diagnostic equipment.

Check the fluctuation of the vacuum on the tool [DA16] (10 fluctuations of approximately 0,4 ± 0,1 bar).

> **NOTE :** If the vacuum does not fluctuate, check the electrical connection of the turbocharging pressure regulation control electrovalve (3) using the diagnostic tool; otherwise replace the turbocharging pressure regulation control electrovalve (3)

Remove the tool [DA16].

Connect the negative pressure pipe (at "d").

5 - CHECK : EXHAUST GAS RECYCLING CONTROL CIRCUIT (EXCEPT DV6CM, DV6DM, DV6UDM AND DV6EM ENGINES)

5 - 1 - Using the diagnostic equipment

Check : The exhaust gas recycling control circuit ; Using the diagnostic equipment.

Check that the exhaust gas recycling valve clicks audibly on its seat.

If the clicking is not audible ; Check the following points :

- The sealing of the vacuum circuit (Porous pipes, cracked pipes)
- That the vacuum circuit is not blocked (Pipes blocked, kinked)

Carry out all the following checks ; Using tool [DA16].

5 - 2 - Using the manual pressure-vacuum pump [DA16]

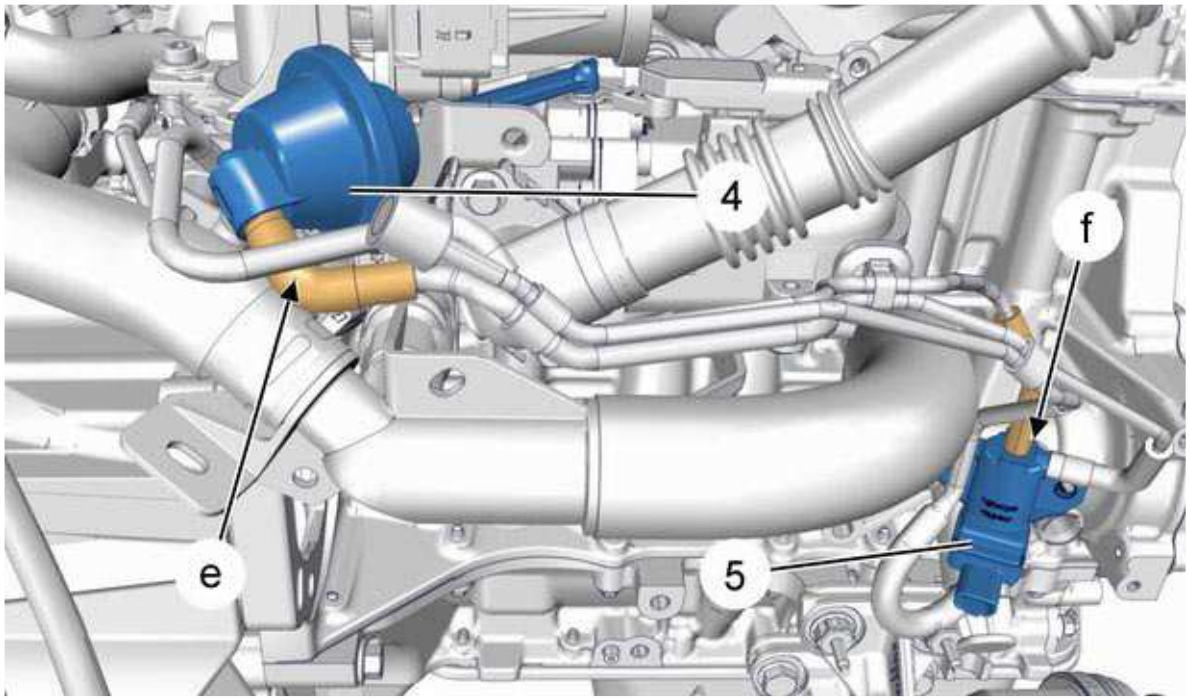

b1hdzizd

Remove the air filter housing .

Uncouple the vacuum pipe (at "e").

Connect tool [DA16] to the control diaphragm (4) of the EGR module (at "e").

Apply a vacuum of approximately 0,6 bar.

> **NOTE :** When the vacuum is suddenly released, the rod of the control diaphragm must return to its initial position

Remove the tool [DA16].

Connect the negative pressure pipe (at "e").

Raise the vehicle.

Remove and move aside : The acoustic shield .

Connect the tool [DA16] to the outlet of the exhaust gas recycling regulation electrovalve (5) (at "f").

Lower the vehicle.

Start the engine (For 1 minute(s)).

> **NOTE :** The engine must be switched on in order to create the air vacuum in the circuit (The check is carried out with the engine off)

Carry out : An actuator test (Exhaust gas recycling solenoid valve) ; Using the diagnostic equipment.

Check the fluctuation of the vacuum on the tool [DA16] (10 fluctuations of approximately 0,4 ± 0,1 bar).

> **NOTE :** If the vacuum does not switch, check the electrical connection of the exhaust gas recycling control solenoid valve (5) ; Using the diagnostic equipment

Remove the tool [DA16].

Connect the negative pressure pipe (at "f").

Refit :

- The air filter casing
- The acoustic shield

DISMANTLING : UNDER ENGINE

ESSENTIAL : Observe the safety and cleanliness recommendations

1 - TOOLING

Equipment :

- Approved cleaning product
- Vacuum extractor
- Round end-piece

Tool	Reference	Designation
[0194-C]  *e5ab08st*	[0194-C]	flywheel stop
[0194-W]  *e5ab0b7t*	[0194-W]	flywheel stop
[0199-J]  *e5ab0qzt*	[0199-J]	Oil sump seal cutting chisel

2 - DISMANTLING

2 - 1 - Coolant pump - Coolant inlet manifold

> **WARNING :** The engine must be drained of all its oil before any work is carried out

Place the engine on a stand.

Remove the cylinder head .

Drain the engine oil off.

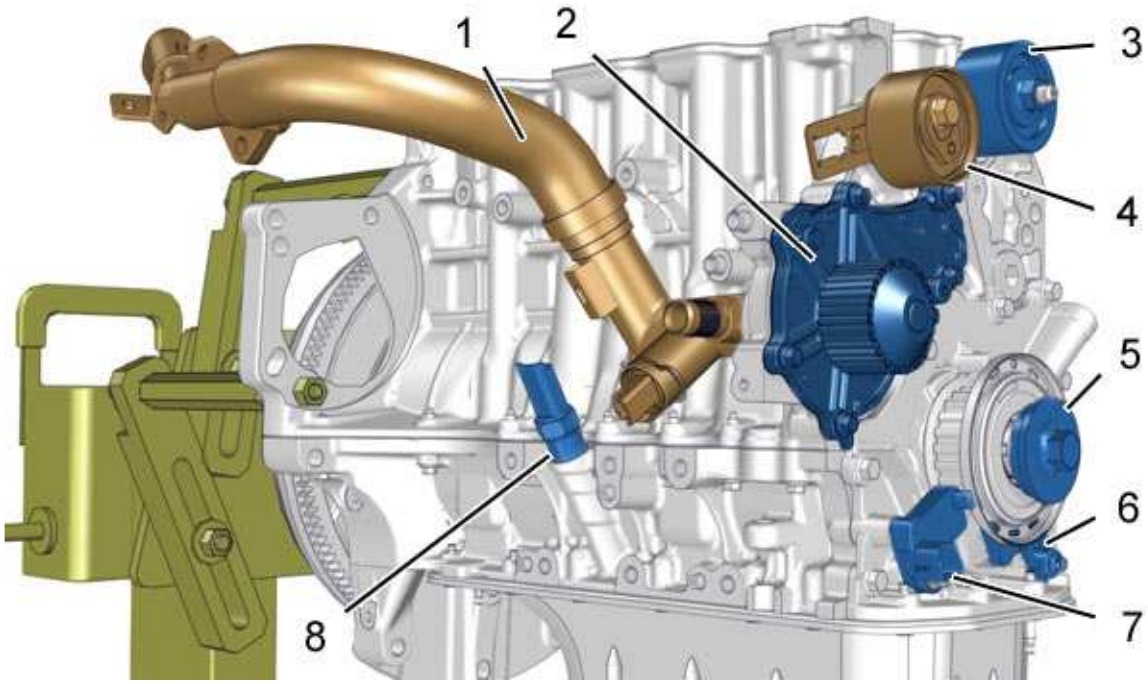

b1bg37hd

Remove :

- The coolant manifold (1)
- The water pump (2) and its gasket
- The guide roller of the timing belt (3)
- The timing roller tensioner (4)
- The offset prevention angle bracket (6)
- The engine speed sensor (7)
- The engine oil level and temperature sensor (8) (according to equipment)

Refit bolt (5).

2 - 2 - Oil filter support

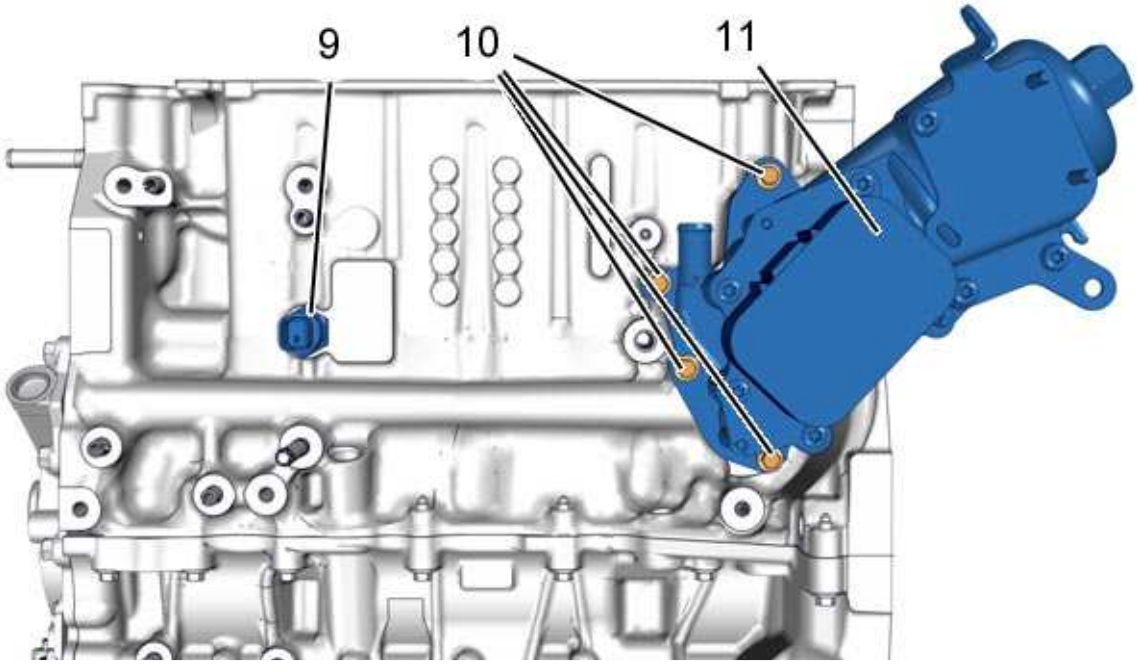

b1bg37id

Remove :

- The engine oil pressure switch (9)
- The seal of the oil pressure gauge pressure sensor
- The 4 bolts (10)
- The oil filter bracket (11)

2 - 3 - Engine flywheel

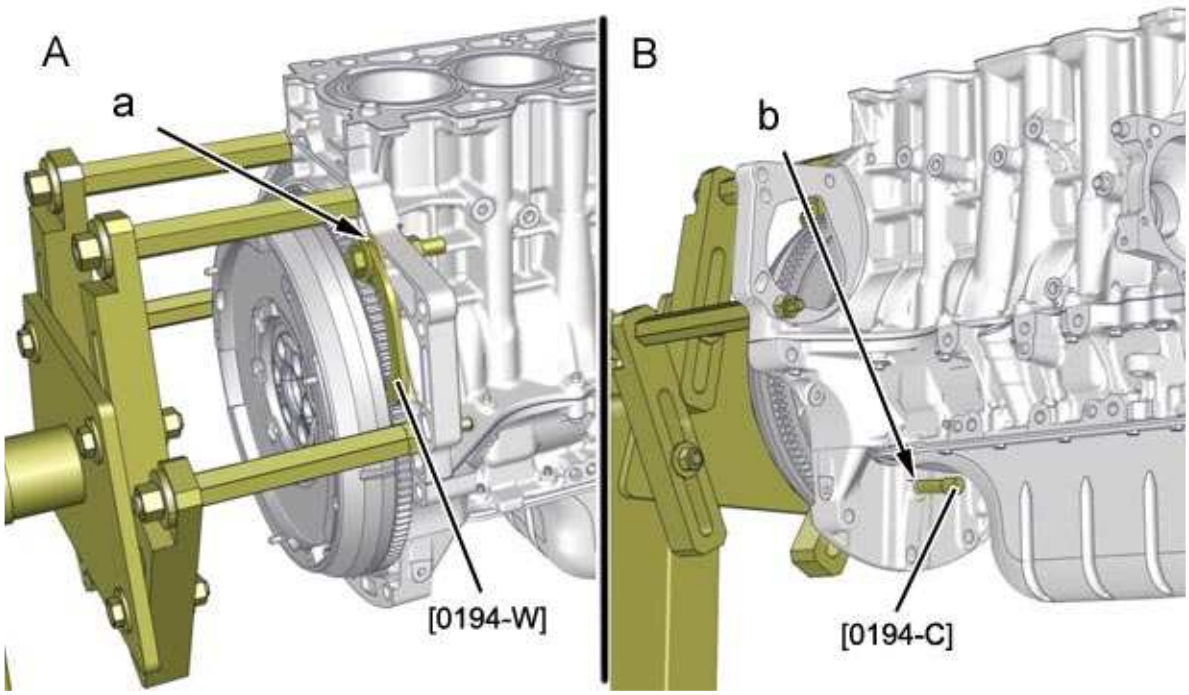

b1bg37jd

"A" First possibility DV engines all types.

"B" Second possibility Engines: DV all types except DV6U.

NOTE : Just before refitting, carry out the following checks (clockwise)

First possibility (all engine types) :

- Position a spacer of 8 mm between the tool [0194-W] and the engine casing (at "a")
- Fit the tool [0194-W] ; Using a bolt and a nut

Second possibility (all engines except DV6U) :

- Just before refitting, carry out the following checks (clockwise)
- Fit the tool [0194-C] (at "b")

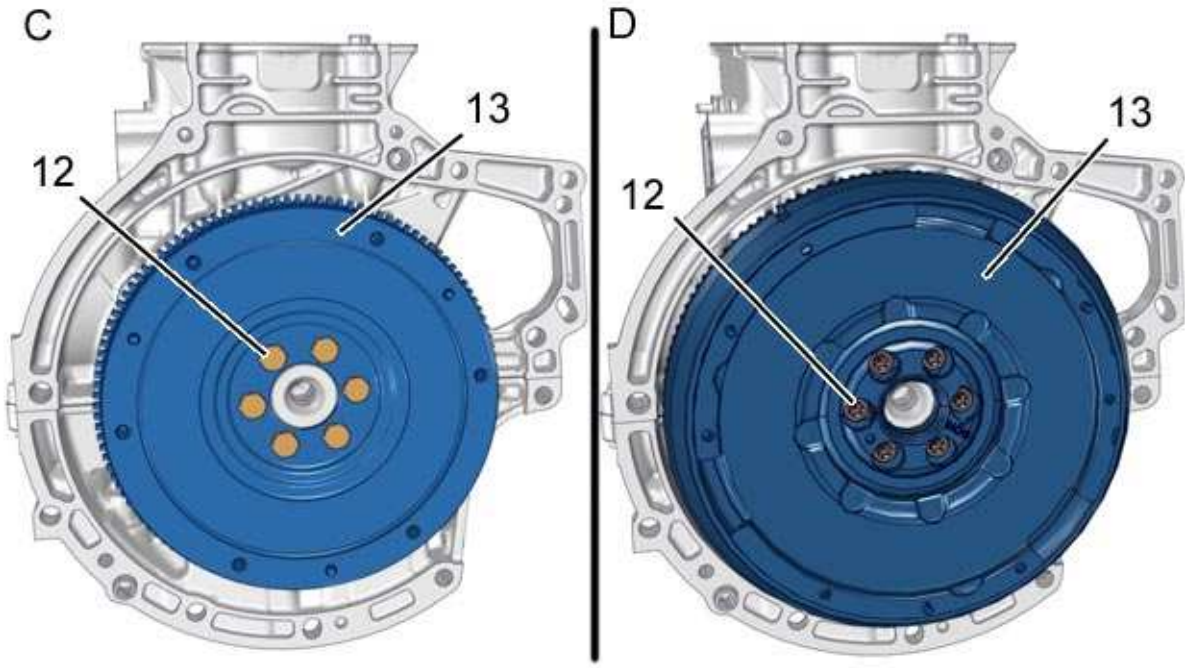

b1bg37kd

"C" Single flywheel.

"D" Double damped engine flywheel.

Rotate the engine by means of the crankshaft pulley screw to bring it to the flywheel locking position.

Lock the flywheel ; Using tool [0194-C] ou [0194-W] (depending on the version).

Remove (depending on the version) :

- The 6 bolts (12)

- The flywheel (13)

> **WARNING :** Check the presence of the centring pins for the clutch mechanism

2 - 4 - Sump (all engines except DV6U)

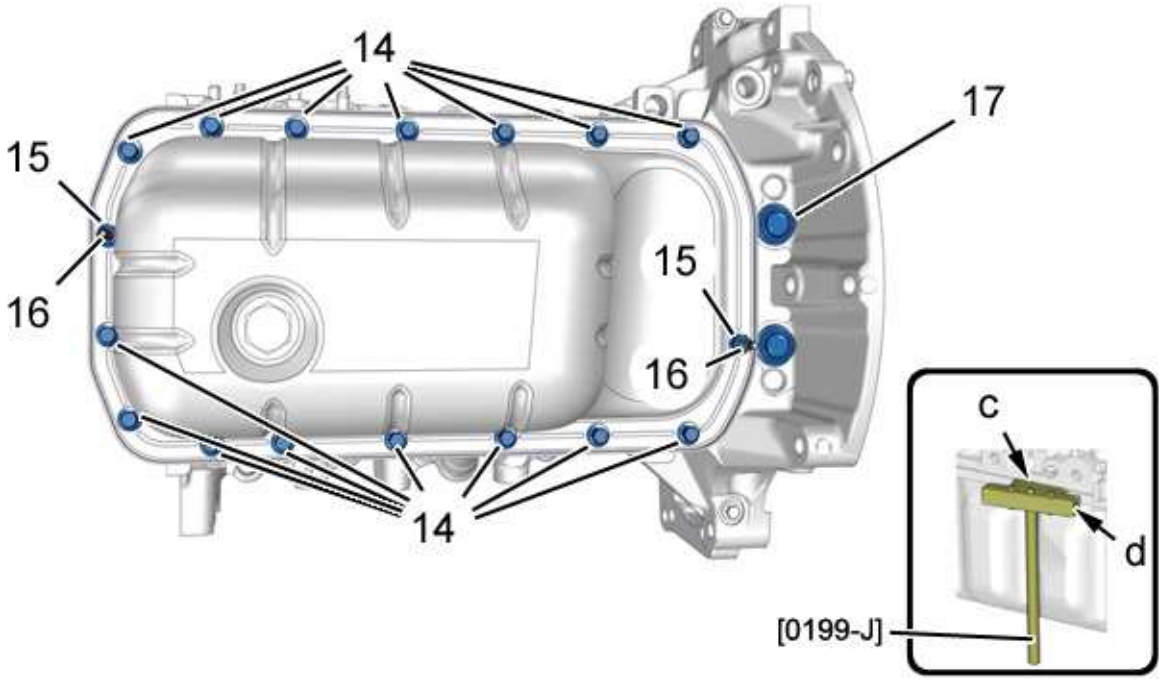

b1fg09vd

Remove the 15 fixing screws (14).

Unscrew the 2 nuts (15).

> **NOTE :** Partially loosen the 2 studs (16) to detach engine oil sump

Detach : The oil sump :

- Insert the tool [0199-J] (at "c")
- Cut the seal by tapping with a hammer (at "d") to slide the tool [0199-J] on the periphery of the oil sump

Remove :

- The 2 nuts (15)
- The 2 studs (16)
- The oil sump
- The 2 plugs (17)

2 - 5 - Sump (DV6U engines)

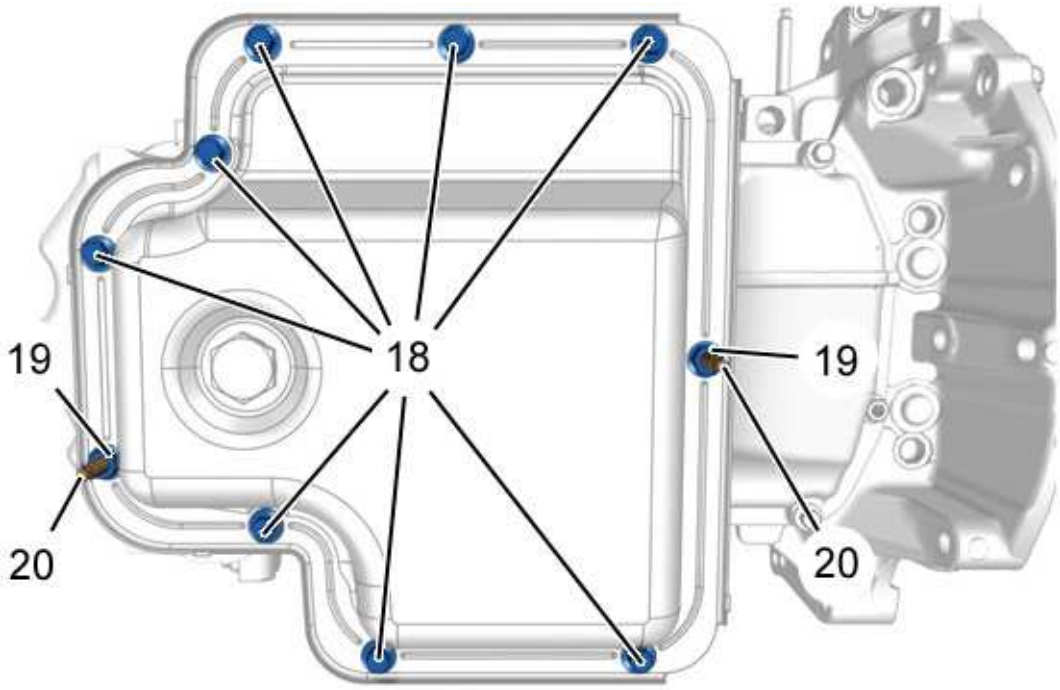

b1fg09wd

Remove the 8 fixing screws (18).

Unscrew the 2 nuts (19).

NOTE : Partially loosen the 2 studs (20) to detach engine oil sump

Detach : The oil sump ; Using tool [0199-J].

Remove :

- The 2 nuts (19)
- The oil sump (Of steel)
- The 2 studs (20)

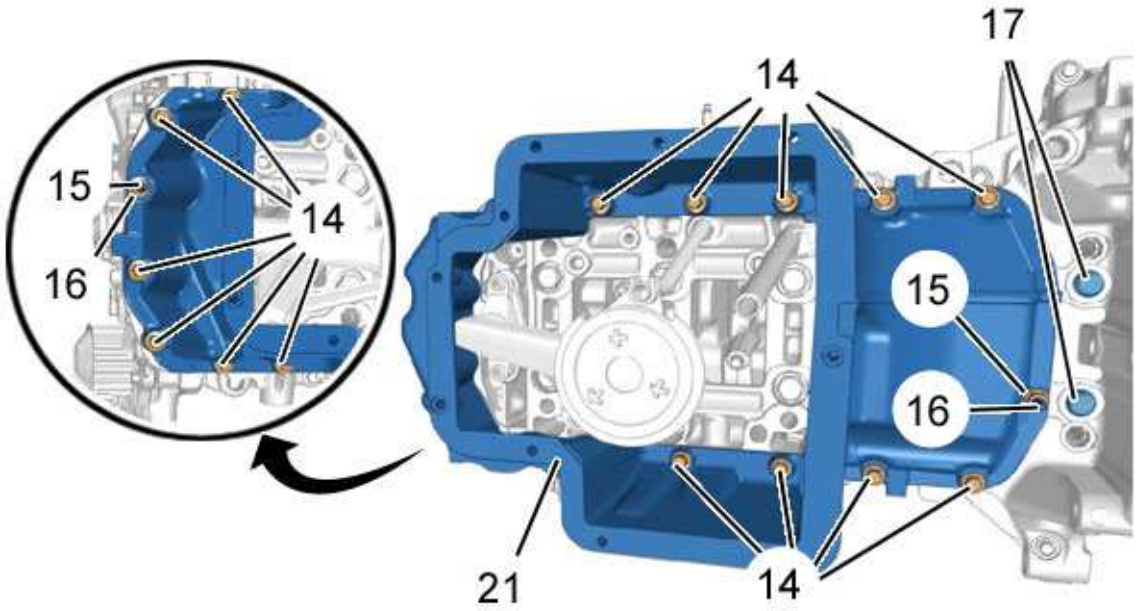

b1fg09xd

Remove the 15 fixing screws (14).

Unscrew the 2 nuts (15).

NOTE : Partially loosen the 2 studs (16) to detach engine oil sump (21)

Detach : The oil sump (21) ; Using tool [0199-J].

Remove :

- The 2 nuts (15)
- The 2 studs (16)
- The oil sump (21)
- The 2 plugs (17)

2 - 6 - Common operations

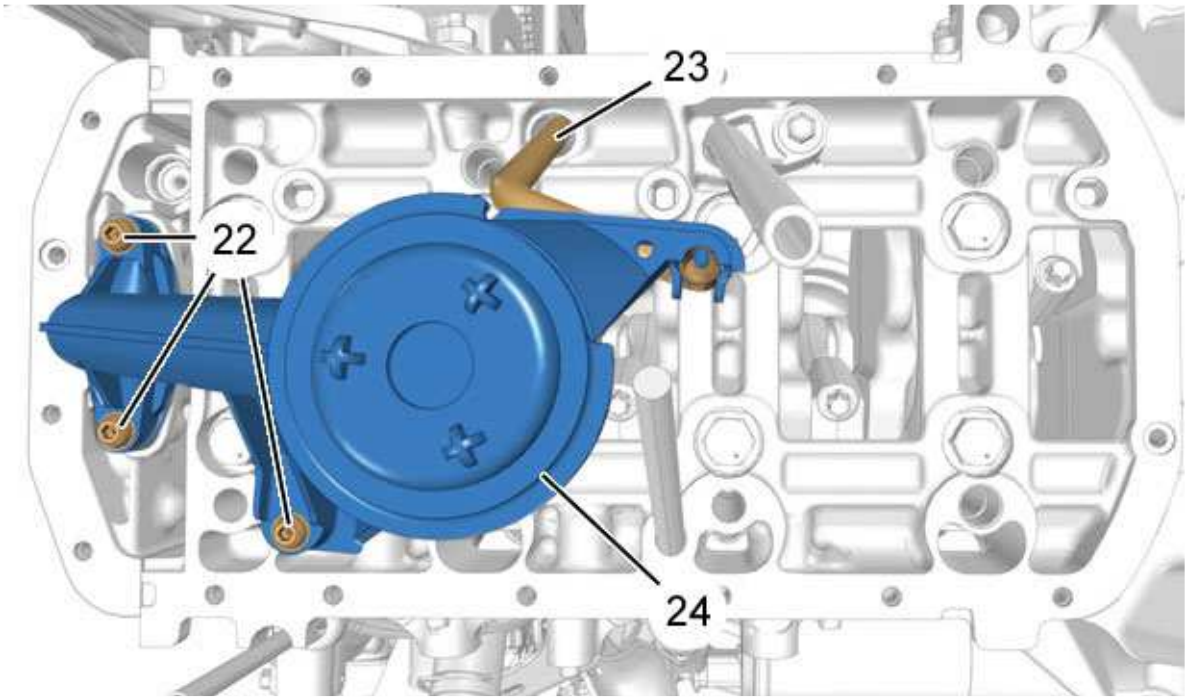

b1fg09yd

Remove :

- The 3 bolts (22)
- The oil pump strainer (24) (according to equipment)
- The dipstick guide tube (23)

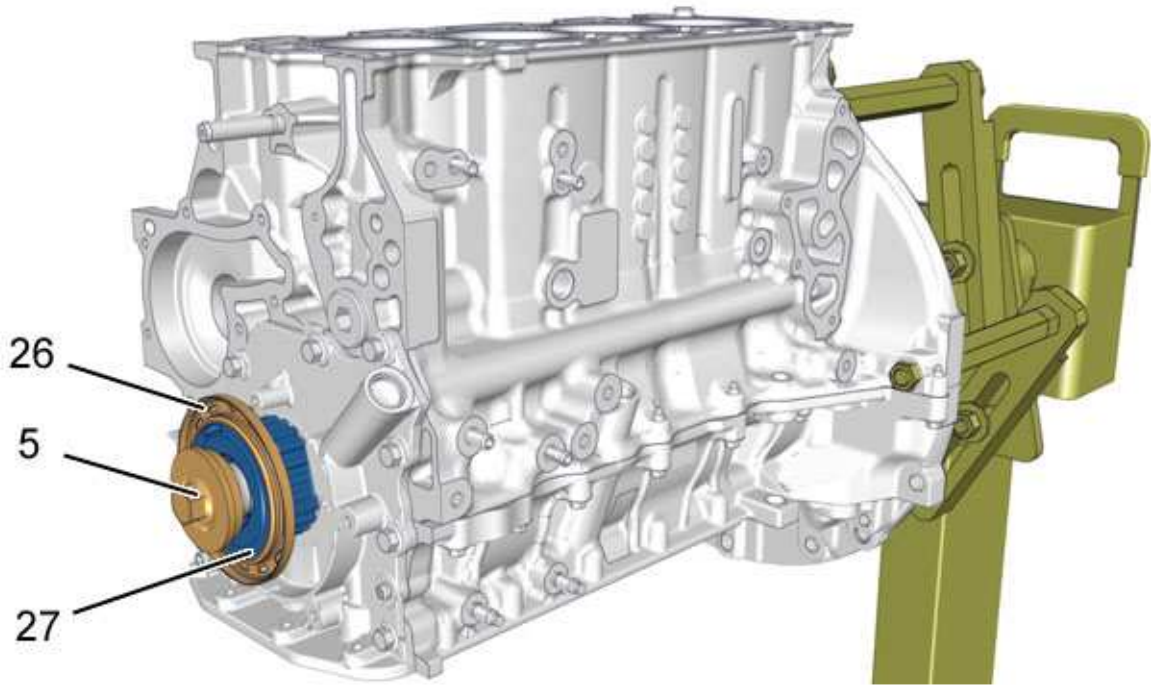

b1bg37md

NOTE : Take care not to deform the target (26) when removing the crankshaft gear (27)

Remove :

- The (5) bolt
- The crankshaft gear (27) (Carefully)

NOTE : Retrieve the key

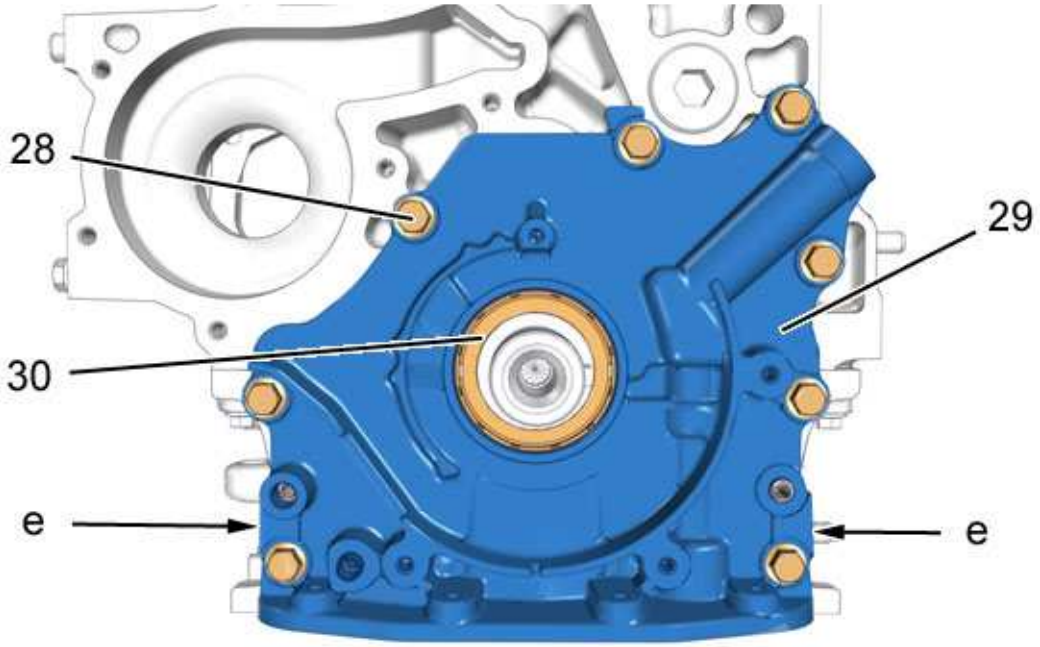

b1fg09zd

Remove the 8 bolts (28).

Detach : The oil pump (29) (at "e") ; Using a flat screwdriver.

Remove :

- The oil pump (29)
- The sealing ring (30)
- The oil temperature gauge (according to equipment)
- The oil gauge cap from the crankshaft bearing cap cover (according to equipment)

2 - 7 - Reciprocating gear

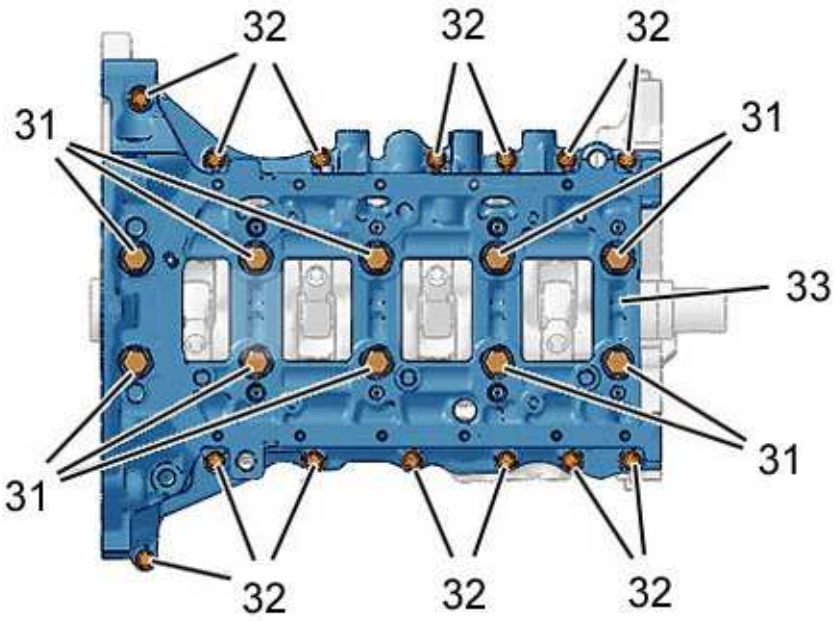

b1cg03id

Remove :

- The 10 screws (31) fixing the crankshaft bearing cap cover (33)
- The 14 screws (32) attaching the crankshaft bearing cap cover

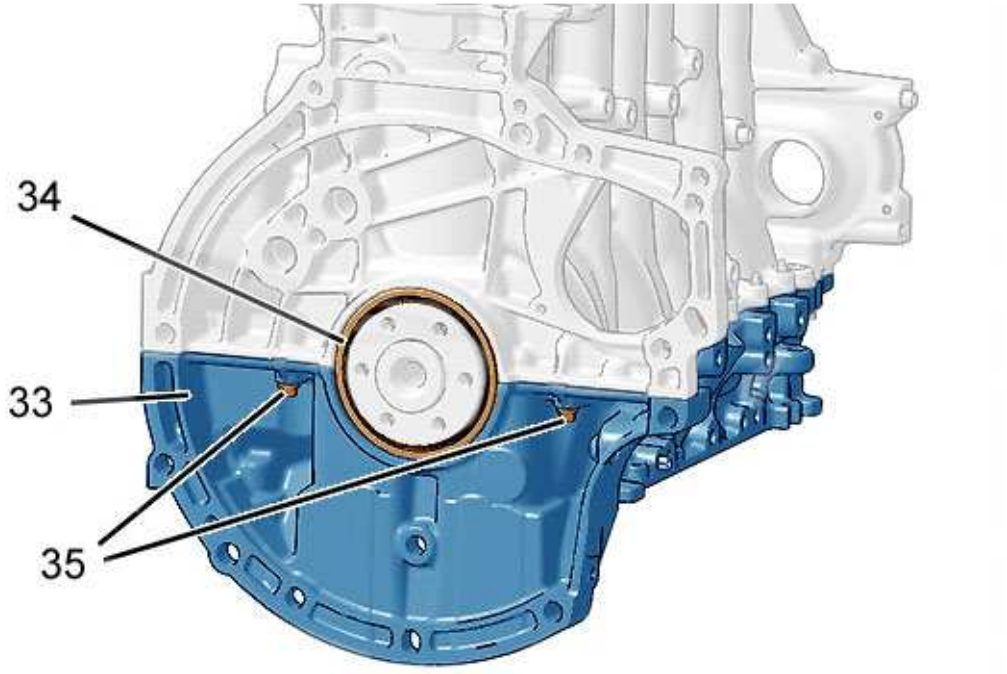

b1cg03jd

Remove :

- The 2 screws (35) attaching the crankshaft bearing cap cover
- The crankshaft bearing caps casing (33)
- The crankshaft ring seal (34), flywheel end

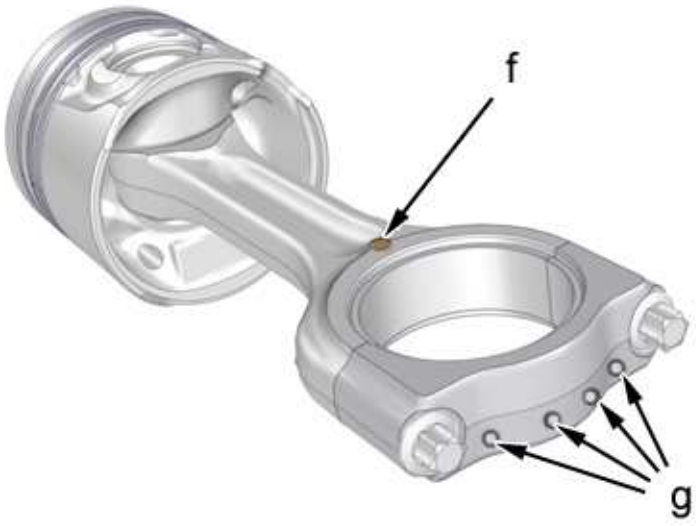

b1cg03kd

WARNING : Note the position and the matching of the conrod caps and conrods

Mark the position of the piston / conrod assemblies in relation to the corresponding cylinders (1,2,3,4) :

- Mark a line in colour "g" : On big end cap (clutch side)
- Mark the direction of fitting of the connecting rod : The boss "f" is oriented to the timing end

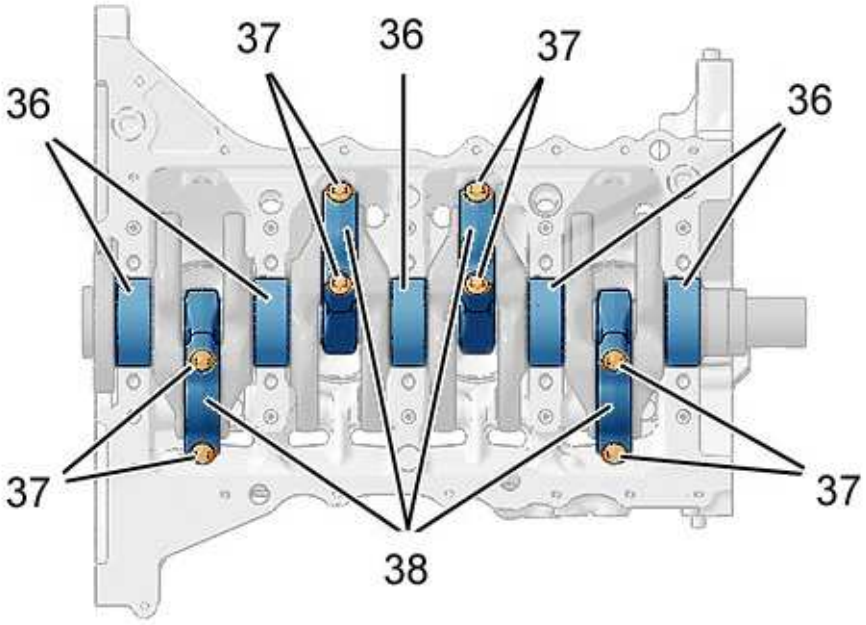

b1cg03ld

Remove the 5 smooth crankshaft bearing shells (36).

NOTE : Note the position and the matching of the 5 smooth crankshaft bearing shells

Remove :

- The 8 screws (37) fixing the conrod caps
- The 4 conrod caps (38)

NOTE : Note the position and the matching of the conrod caps and conrods

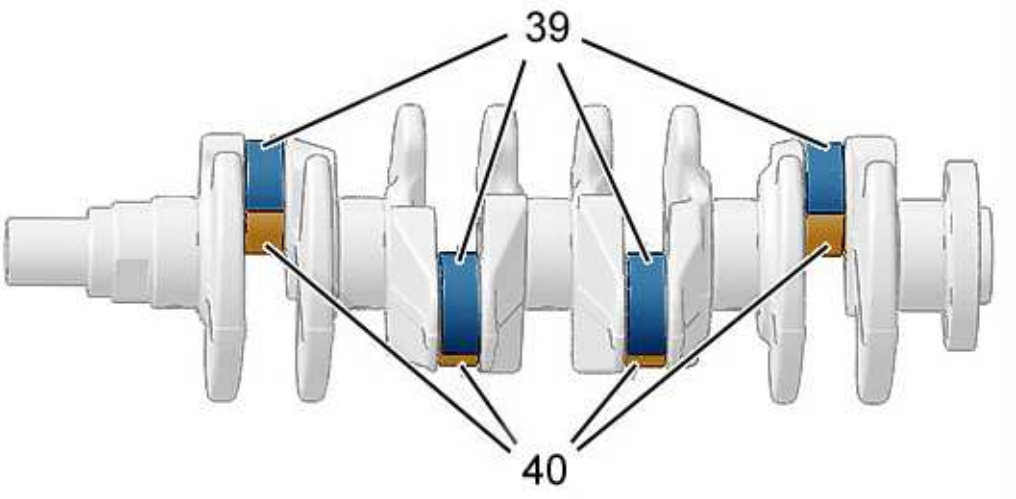

b1cg03md

WARNING : Note the position and the matching of the bearing shells with the conrods and conrod caps

Remove :

- The 4 conrod lower bearing shells (39)
- The 4 conrod upper bearing shells (40)
- The crankshaft

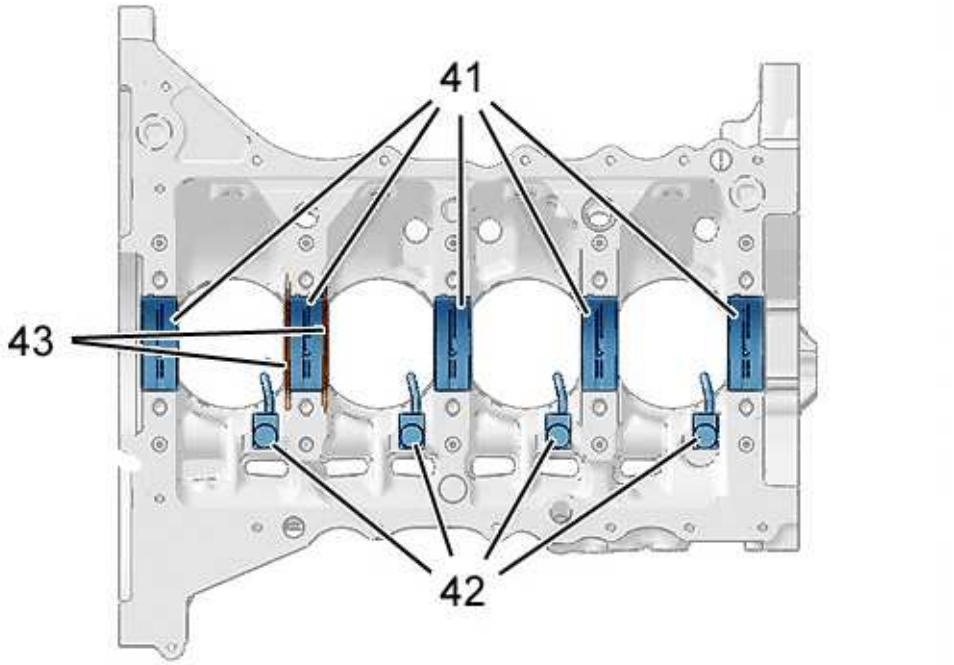

b1cg03nd

WARNING : Note the position and the matching of the bearing shells with the cylinder block and the crankshaft bearing flanges

Remove :

- The 2 crankshaft bearing flanges (43)
- The 5 grooved crankshaft bearing shells (41)
- The 4 screws fixing the piston skirt spray jets (42)
- The 4 piston skirt spray jets (42)

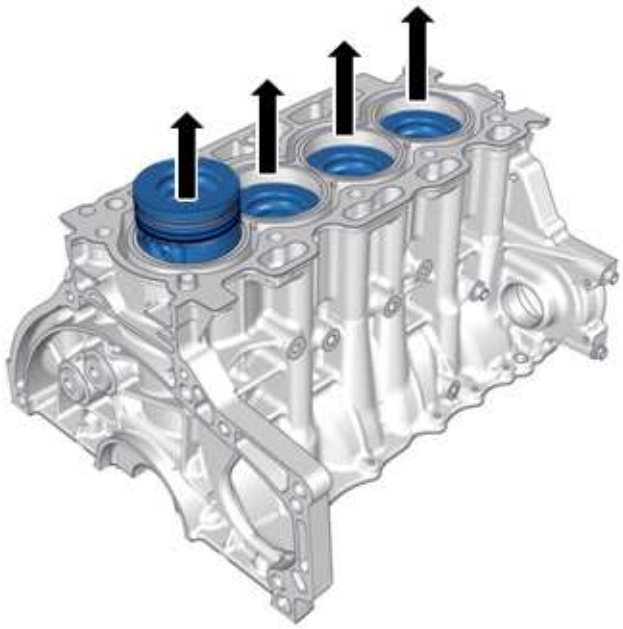

b1cg03od

WARNING : Note the position and the matching of the piston / conrod assemblies in relation to the cylinder block

Remove the 4 piston conrod assemblies (as per arrows).

2 - 8 - Disassembling the connecting rod/piston assemblies

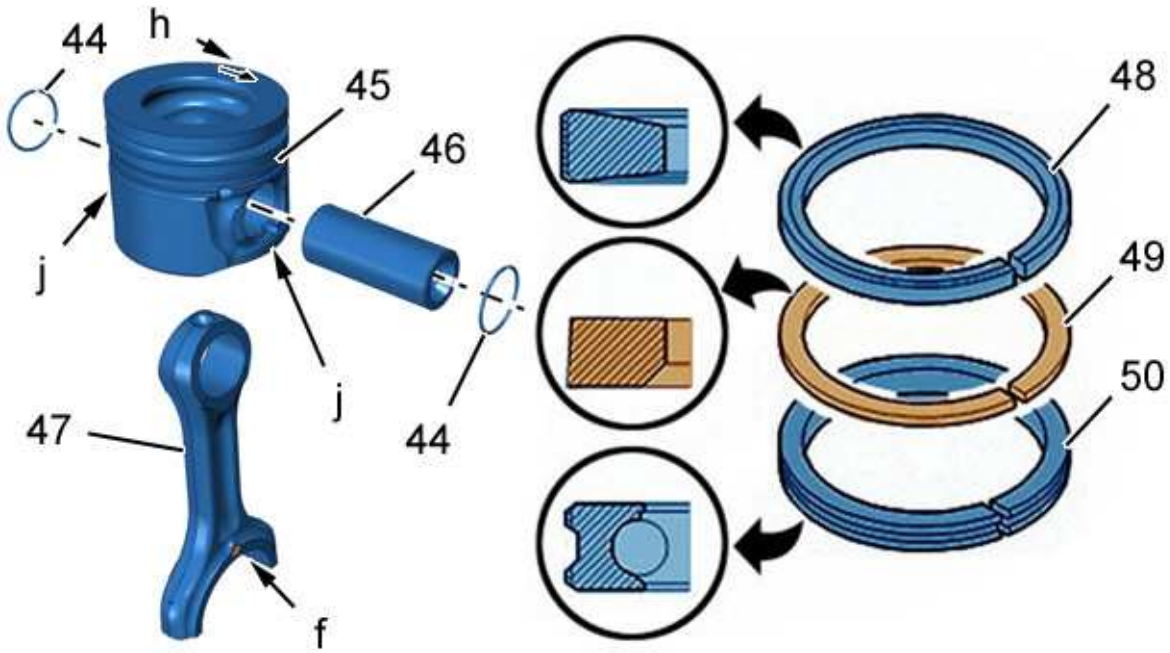

b1cg03pd

"f" Boss.

"h" Engraving "DIST".

"j" Spring retaining slots.

> **WARNING :** Mark the orientation of the conrod in relation to the piston

> **WARNING :** Mark the direction of fitting of the pistons, the arrow (at "h") oriented to the timing end

NOTE : The piston shafts are free-fitted in the little ends and the pistons, then laterally immobilised by means of two stop rings

Remove :

- The circlips (44) ; Lever up ; By means of a screwdriver (at "j")
- The shaft (46)
- The connecting rod (47)
- The piston (45)
- The piston rings (48), (49) and (50)

> **WARNING :** The parts must be clean and free from any trace of abnormal wear or impact

3 - CHECKS

> **WARNING :** Thoroughly clean each component, using the specially approved products

3 - 1 - Cylinder block

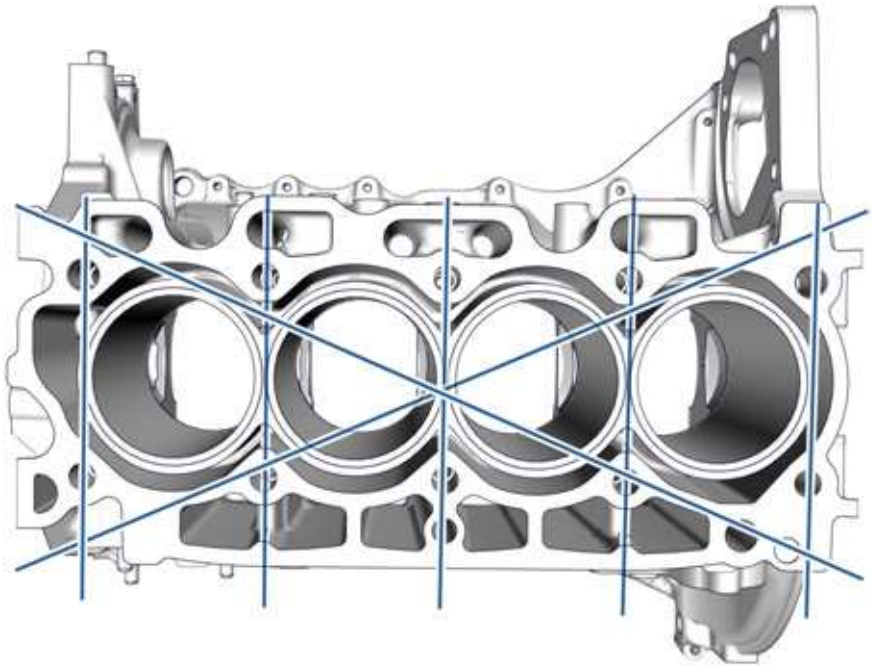

b1cg03qd

Checking the flatness is done with the aid of a checking ruler and a set of shims (see figure below).

Maximum permissible bow = 0,05 mm.

Check the following points :

- Check that there is no stripping of the metal (Cylinders - Main bearings)
- Measure the wear on the different components (Cylinders - Main bearings)
- Check the various lubrication channels
- Check the sealing of the cylinder block (Sealing test using pressurisation)
- Check there are no leaks from the balls - Blanks
- Check there are no leaks from the well caps

Replace any defective parts.

3 - 2 - Reciprocating gear

Check the following points :

- Check that there is no stripping of the metal (Barrels ; Pistons ; Little ends ; Piston rings ; Conrods ; Half shells ; Thrust washers ; Crankshaft)
- Measure the wear on the different components (Barrels ; Pistons ; Little ends ; Piston rings ; Conrods ; Half shells ; Thrust washers ; Crankshaft)

Replace any defective parts.

3 - 3 - Oil pump

Check the following points :

- Check there are no particles in the oil pump strainer
- Check there are no tight spots on the oil pump

Replace any defective parts.

3 - 4 - Piston skirt spray jets

Check there are no plugs in the piston skirt spray jets.

DISMANTLING : ENGINE TOP

ESSENTIAL : Follow the safety instructions

WARNING : This procedure is intended for the replacement of faulty internal components of the cylinder head. If the cylinder head is damaged, replace it with a new cylinder head assembly

1 - TOOLING

NOTE : Use the approved products

Equipment :

- Valve spring compressor
- Approved cleaning product

tool	Reference	Designation
[1 860 765 000] 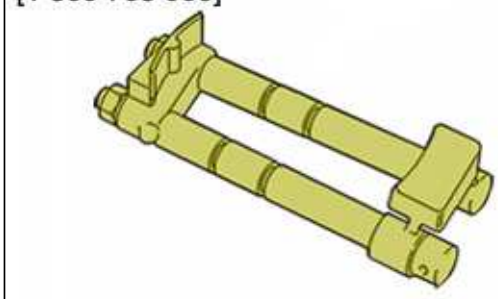 *e5ab0b4t*	[1 860 765 000] ([0191] kit)	tool for immobilising the toothed belt pulley
[0132-AA] 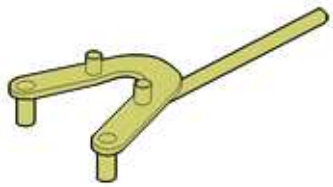 *e5ab0ddt*	[0132-AA]	toothed belt pinion locking tool
	[0185]	Cylinder head bolt socket

[0185] 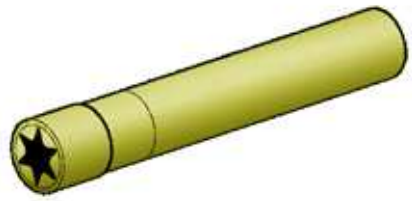 *e5ag07dt*		
[0153-Q] 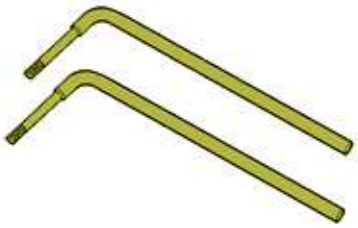 *e5ab0upt*	[0153-Q]	set of levers for releasing the cylinder head
[0170-A]  *e5ab19bt*	[0170-A]	pliers for removing the valve stem seals

2 - STRIPPING THE CYLINDER HEAD

> **WARNING :** The engine must be drained of all its oil before any work is carried out

Remove the gearbox.

Fitting the engine to the stand.

The following components have to be priorly removed :

- The engine electric harness
- The air filter casing (according to equipment)
- The complete fuel filter with its mounting
- The air inlet mixer unit

- The module (EGR)
- The air inlet pipe
- The inlet air bypass unit
- The alternator and its support
- The dipstick guide tube and the dipstick
- The power steering pump (according to equipment)
- The vacuum pump
- The thermostat
- The timing belt
- The injection system
- The turbocharger

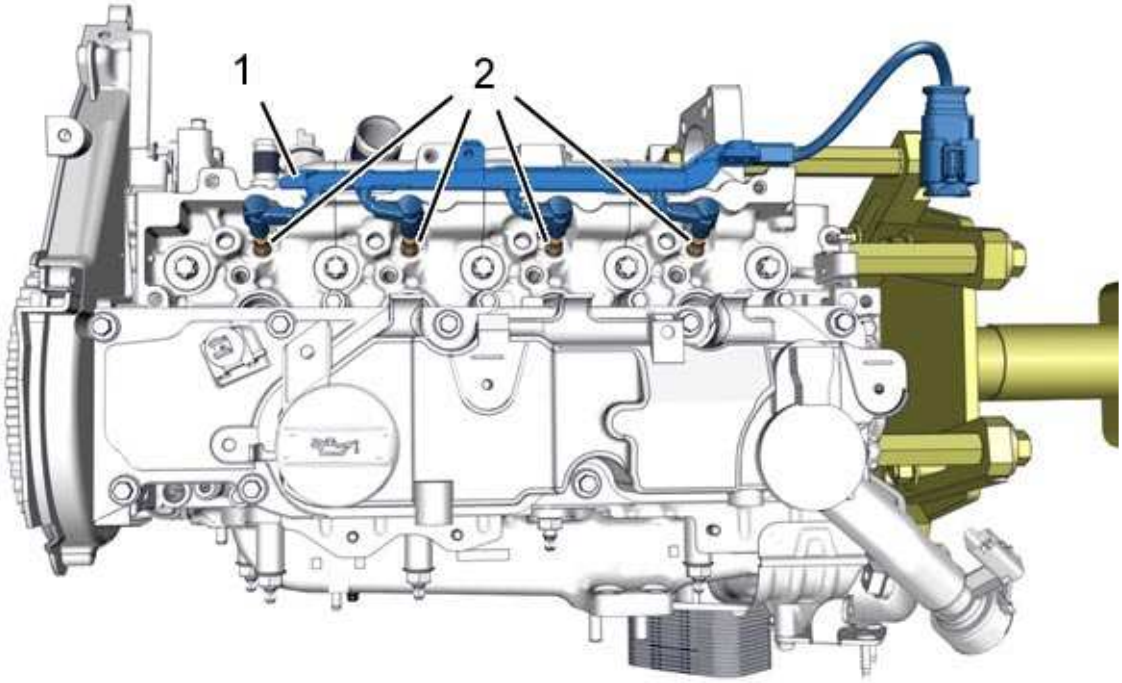

b1bg37od

Remove :

- The glow plugs supply harness (1)
- The pre-heater plugs (2)

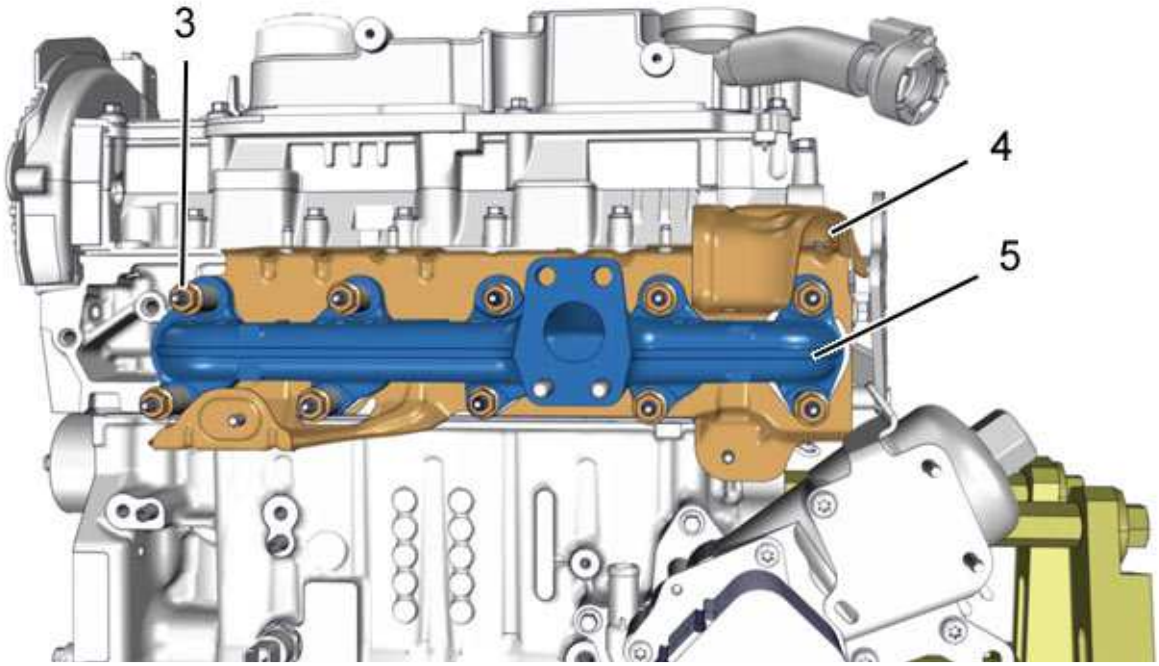

b1bg37pd

Remove :

- The nuts (3) of the exhaust manifold (5)
- The 8 spacers
- The exhaust manifold
- The heat shield (4) (including the seal)

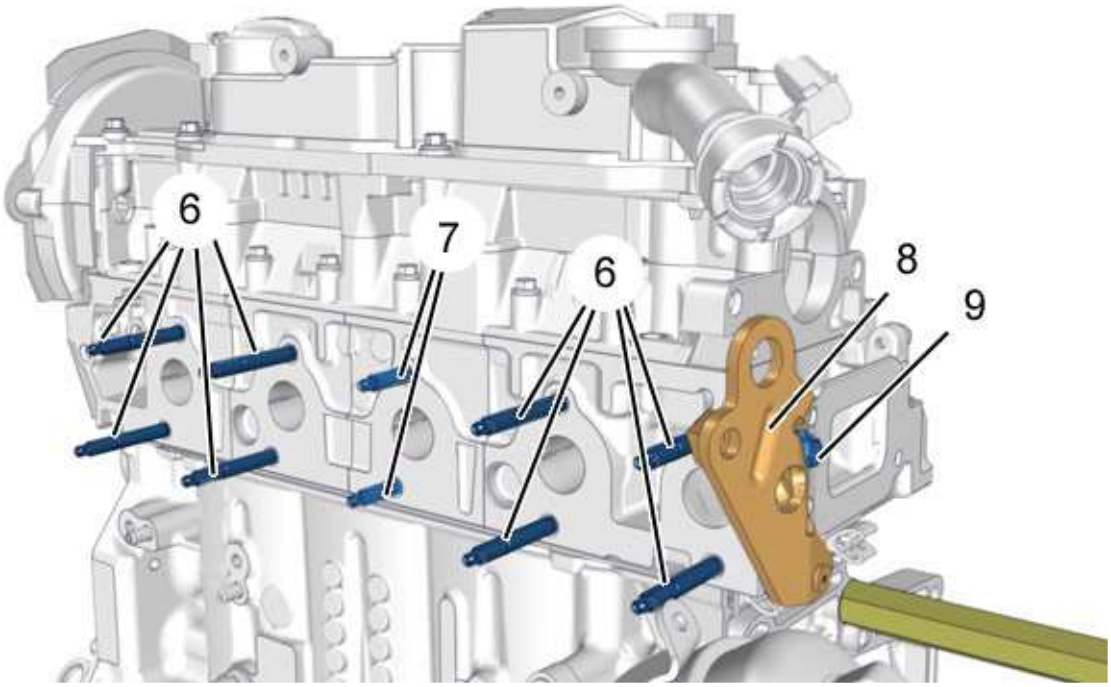

b1bg37qd

Remove :

- The 8 studs (6)
- The 2 studs (7)
- The (9) bolt
- The sling hook (8)

3 - REMOVING THE CYLINDER HEAD COVER

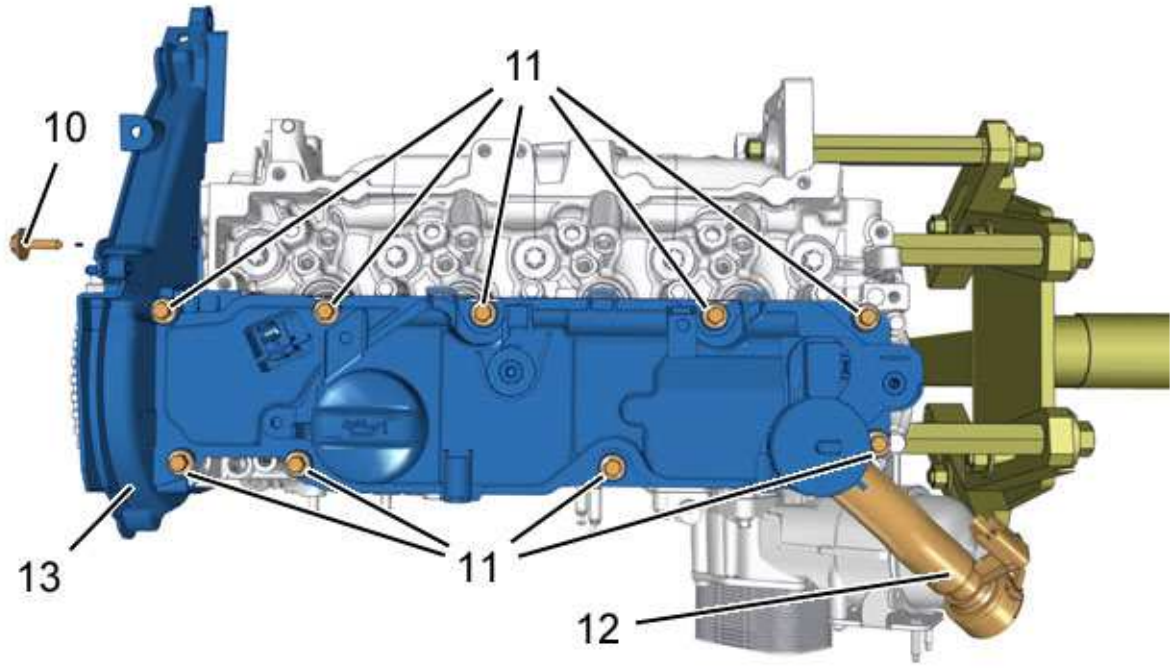

b1bg37rd

Remove :

- The camshaft position sensor
- The (10) bolt
- The 9 bolts (11)
- The cylinder head cover (13)
- The pipe (12)

4 - REMOVING THE CAMSHAFTS

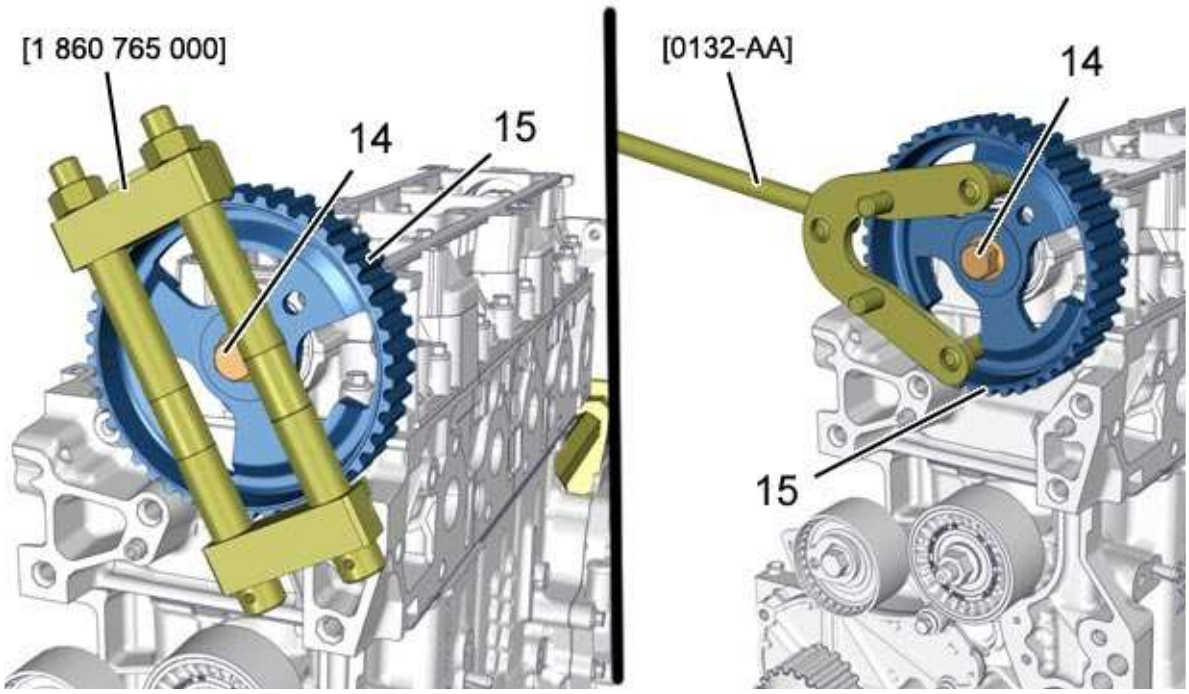

b1bg37sd

Remove ; Using the tools [0132-AA] or [1 860 765 000] :

- The bolt (14)
- The pulley (15)

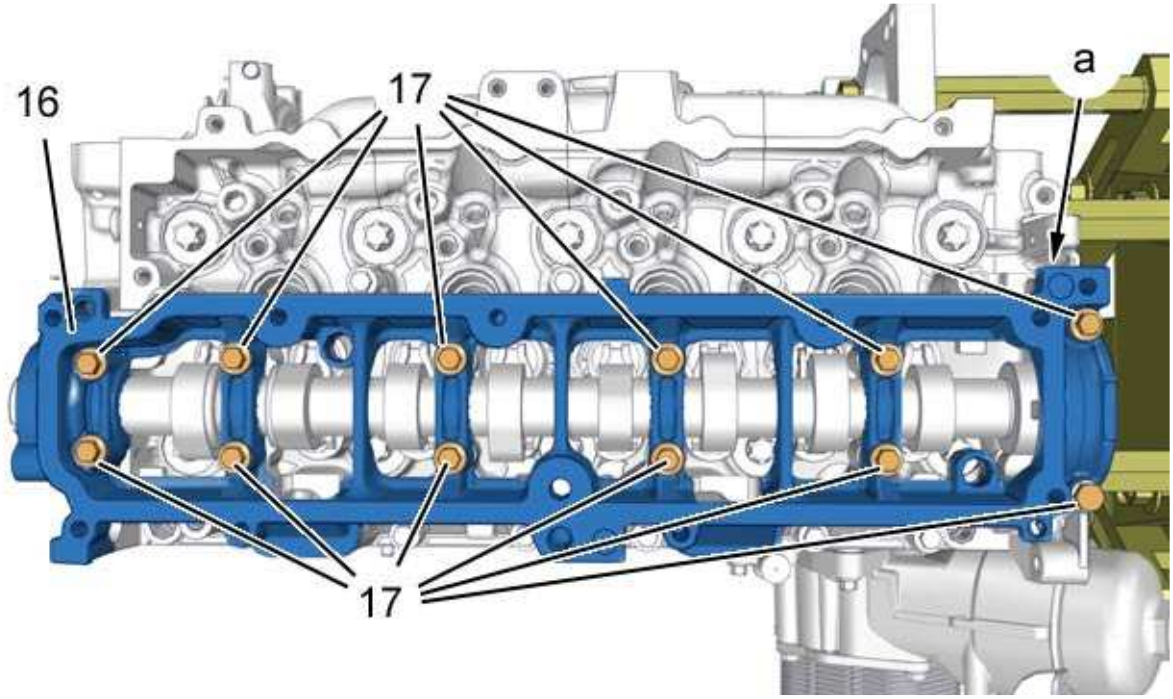

b1bg37td

Remove the bolts (17).

Detach the upper camshaft carrier (16) (at "a").

Remove the upper camshaft carrier (16).

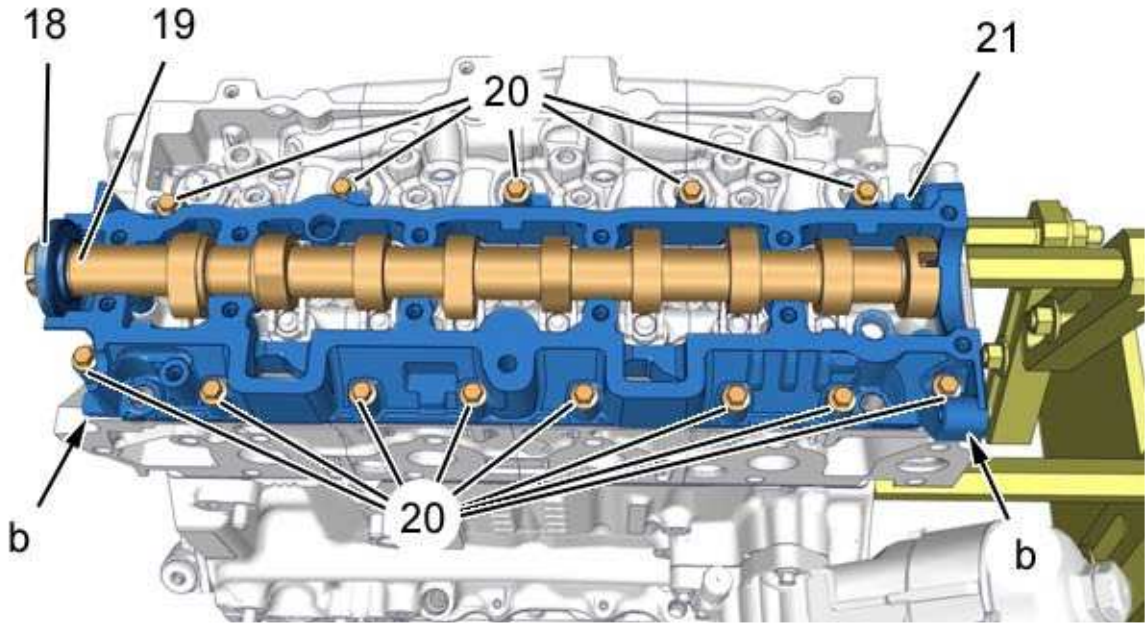

b1bg37ud

Remove :

- The sealing ring (18)
- The camshaft (19)
- The bolts (20)

NOTE : Remove the camshaft housing (21), using the separation zones (at "b")

Detach the lower camshaft carrier (21) (at "b").

Remove the lower camshaft carrier (21).

5 - REMOVING THE ROCKERS AND TAPPETS

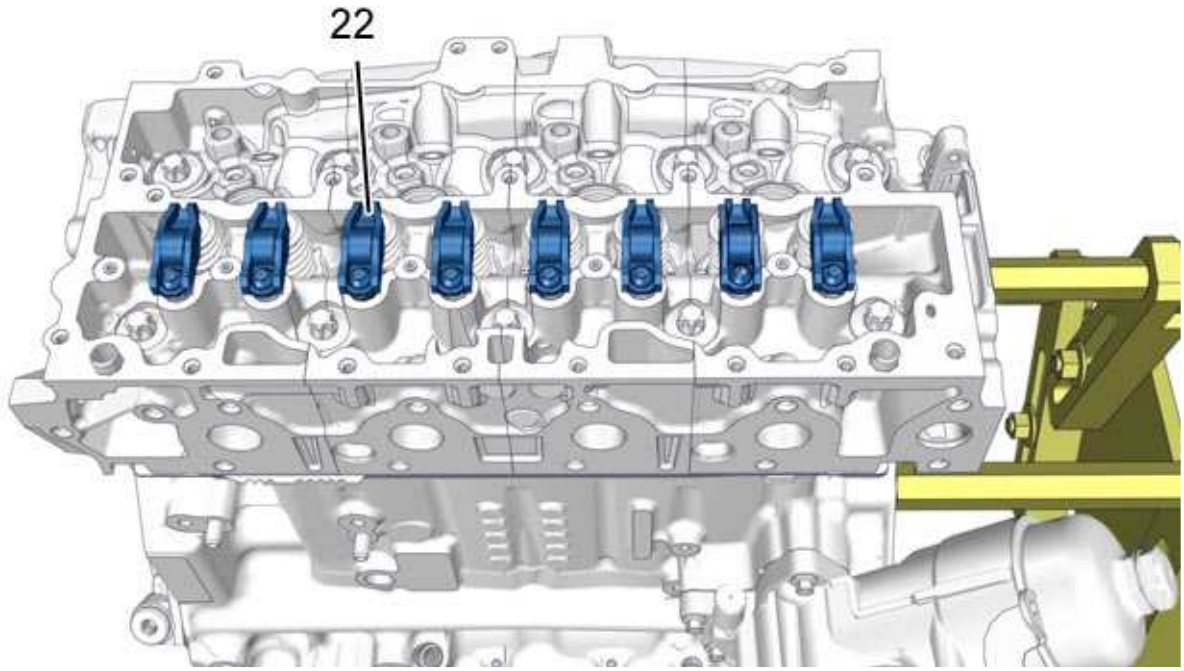

b1bg37vd

WARNING : Before removal, mark the position of each valve rocker

Remove the rockers (22) fitted with their tappets.

NOTE : Immerse the hydraulic tappets in oil to prevent depriming

6 - REMOVING THE CYLINDER HEAD

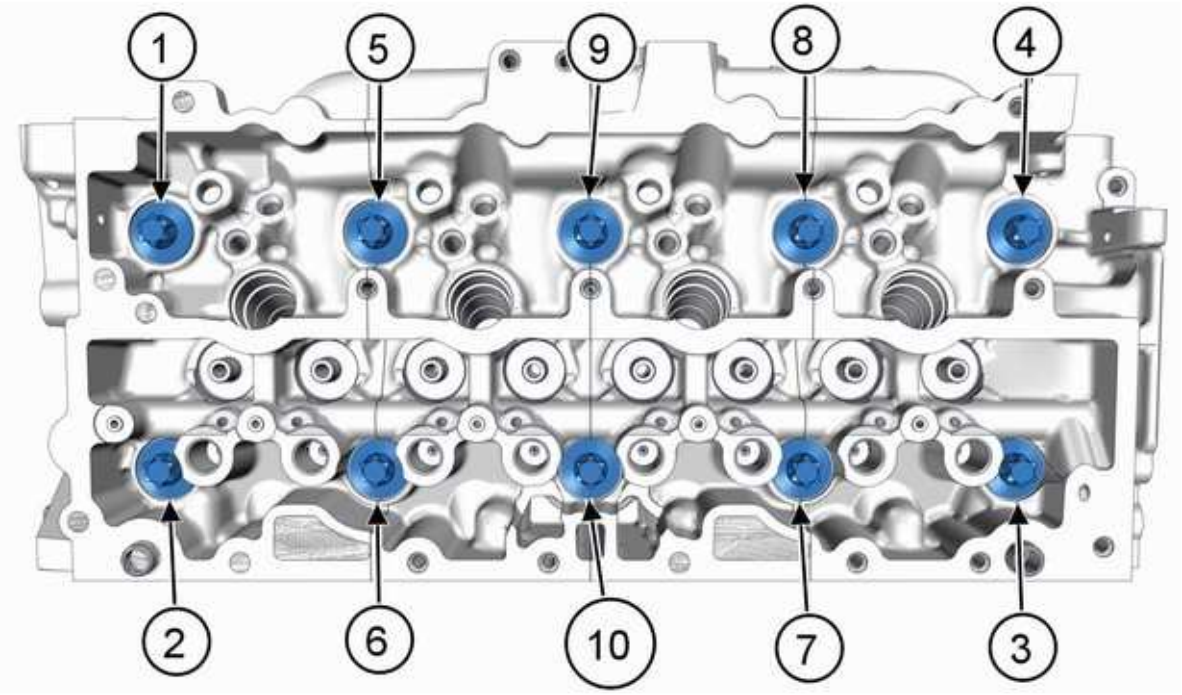

b1dg0add

WARNING : Observe the slackening order

Loosen the cylinder head screws (In the order shown) ; Using tool [0185].

Detach the cylinder head ; Using the tools [0153-Q].

Remove :

- The cylinder head
- The cylinder head gasket

7 - REMOVING THE VALVES

WARNING : Before removal, inspect the recession - protusion of the valves (See chapter "Checks")

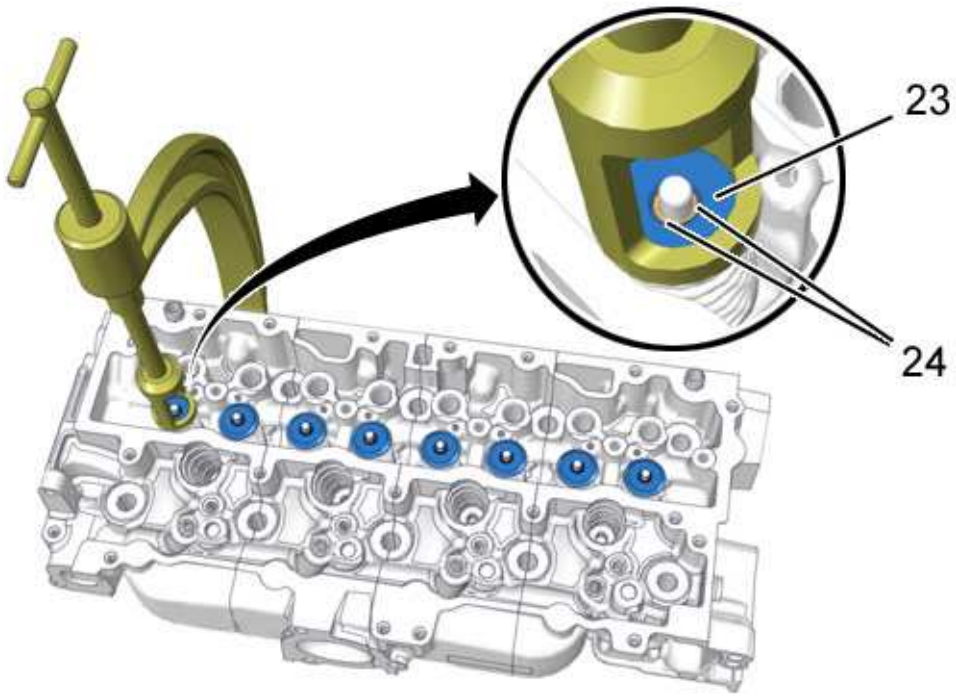

b1bg37wd

WARNING : Before removal, mark the position of each valve

Fit the valve spring compressor tool on the cup (23).

Compress the valve springs ; Using the valve spring compressor.

Detach the half-cones (24) ; Using the slide hammer.

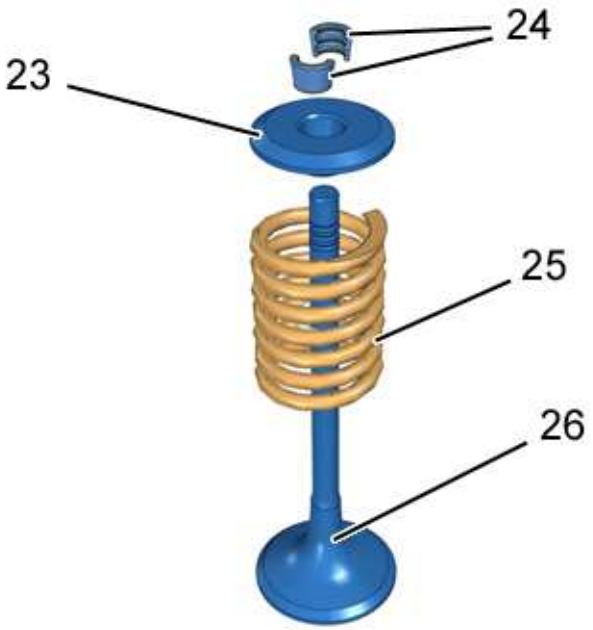

b1bg37xd

Remove :

- Collets (24) ; Using a magnetised screwdriver
- The cup (23)
- The spring (25)
- The valve (26)

Repeat the operation for each valve.

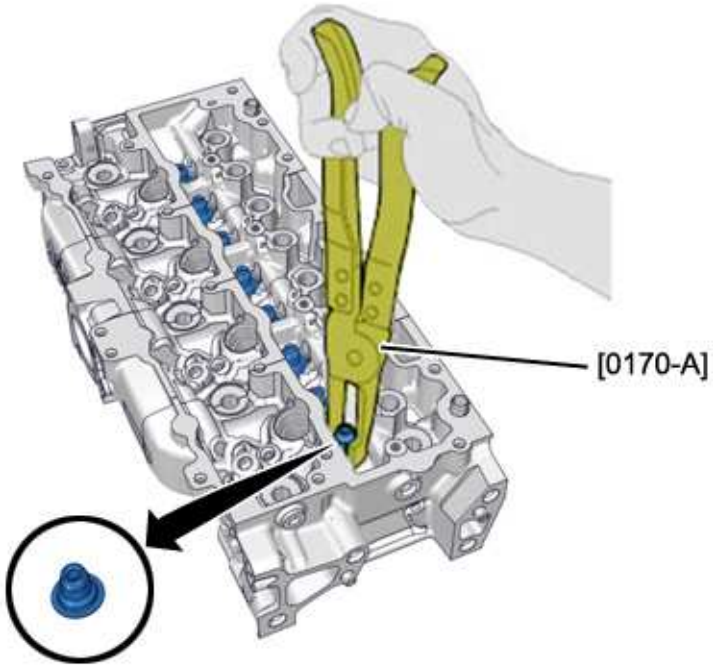

b1bg37yd

Remove valve stem seals ; Using tool [0170-A].

8 - OIL NON-RETURN VALVE

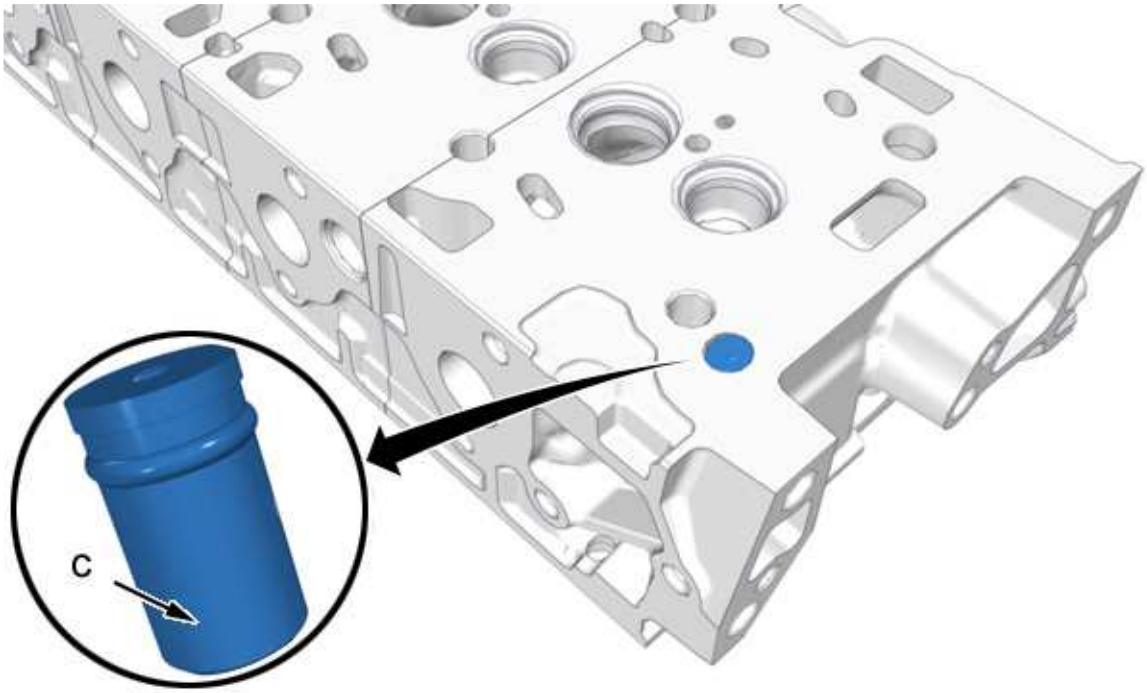

b1bg37zd

NOTE : The oil non-return valve is located in the cylinder head at the oil rise channel, thus maintaining an oil reserve in the top of the engine for the hydraulic tappets

Check that the oil non-return valve is operating (at "c") (No foreign bodies, ball not stuck).

FITTING : ENGINE ON STAND

ESSENTIAL : Observe the safety and cleanliness recommendations

1 - TOOLING

Equipment :

- workshop hoist
- Lifting chain

tool	Reference	Designation
[0013] 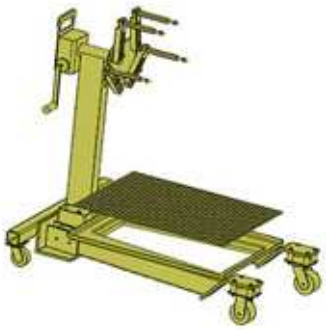 *e5ab0qvt*	[0013]	engine or gearbox mounting bracket stand

2 - FITTING THE ENGINE TO THE STAND

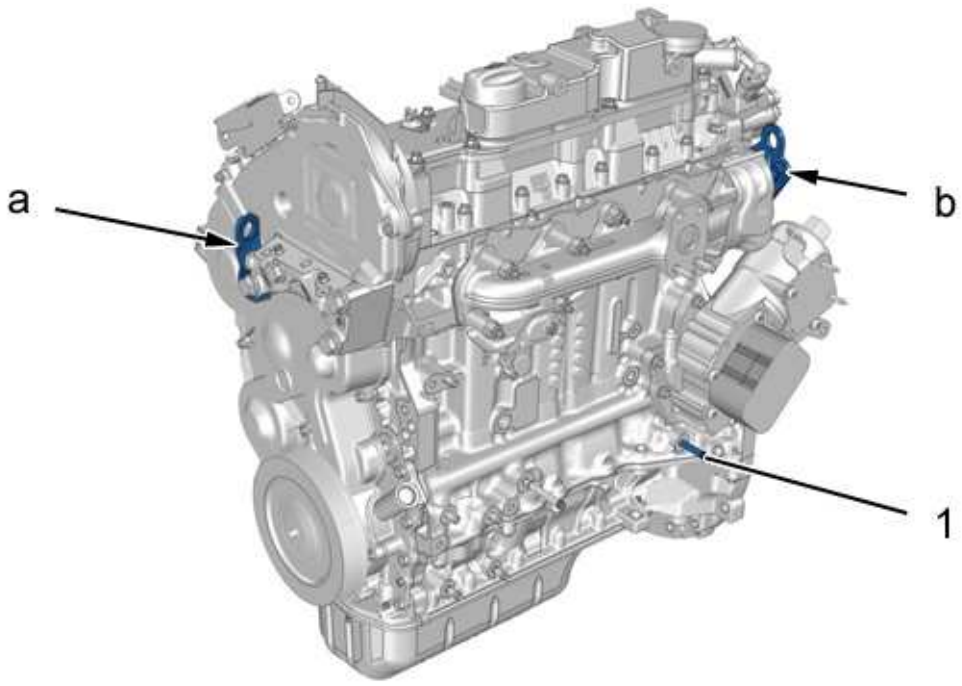

b1bpstmd

Support the engine ; Using the workshop hoist and the lifting chain (at "a" and "b").

Remove the catalytic converter stud (1).

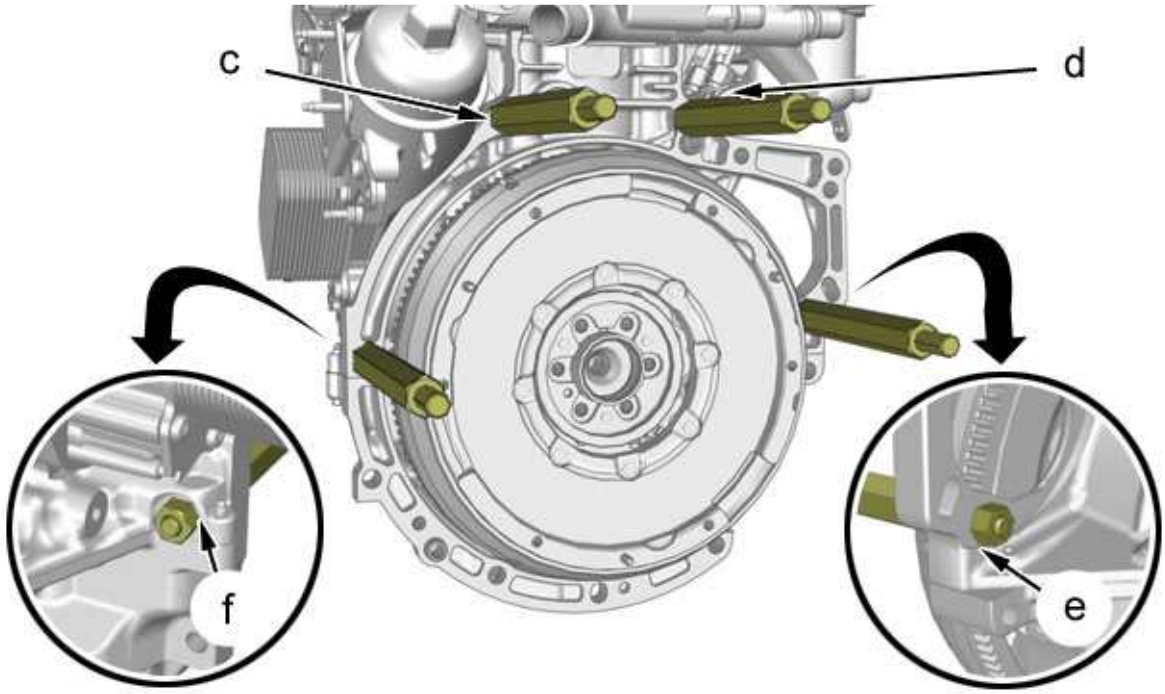

b1bpstnd

Screw the pillar screws [0013] into the engine block (at "c", "d").

Position (at "e", "f") :

- The pillar screws [0013]
- The nuts

Tighten the nuts .

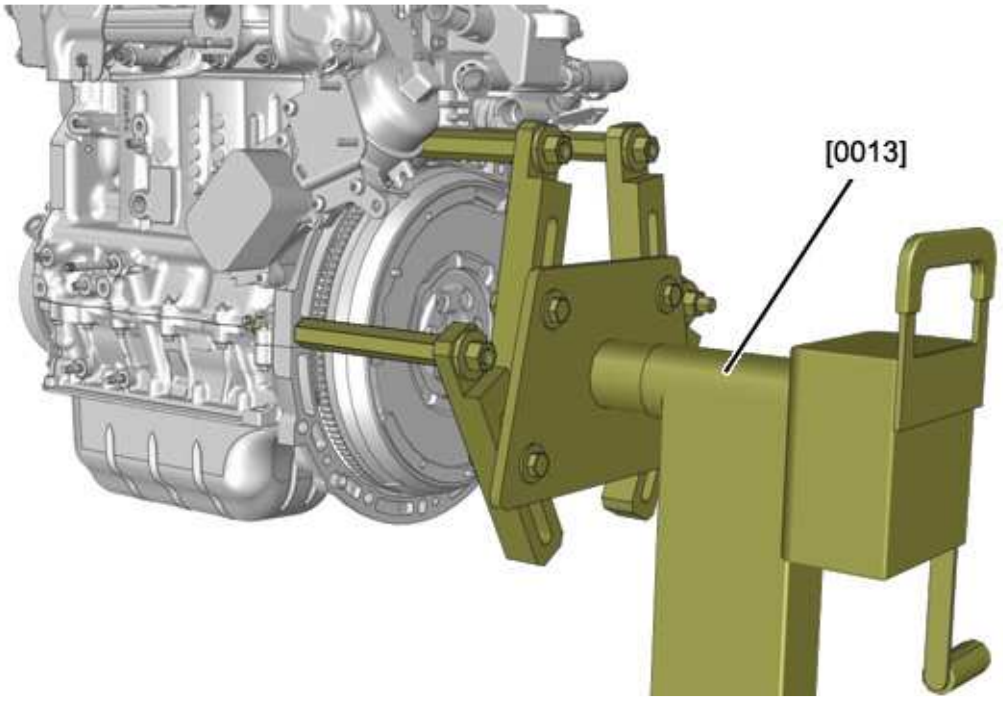

b1bpstod

Position the arm of the stand [0013], as shown.

Fix the engine to the stand ; Using nuts.

> **WARNING :** Check that all the fixings are correctly tightened before detaching the hoist

Detach the workshop hoist from the engine.

REMOVING - REFITTING : INLET AIR METERING UNIT

ESSENTIAL : Observe the safety and cleanliness recommendations

1 - TOOLING

tool	Reference	Designation
[0194-T] 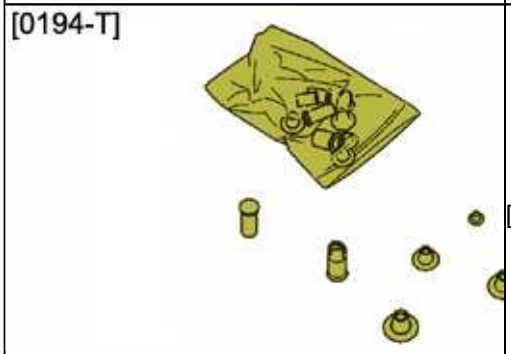 *e5ab05lt*	[0194-T]	plugs kit

2 - LOCATION

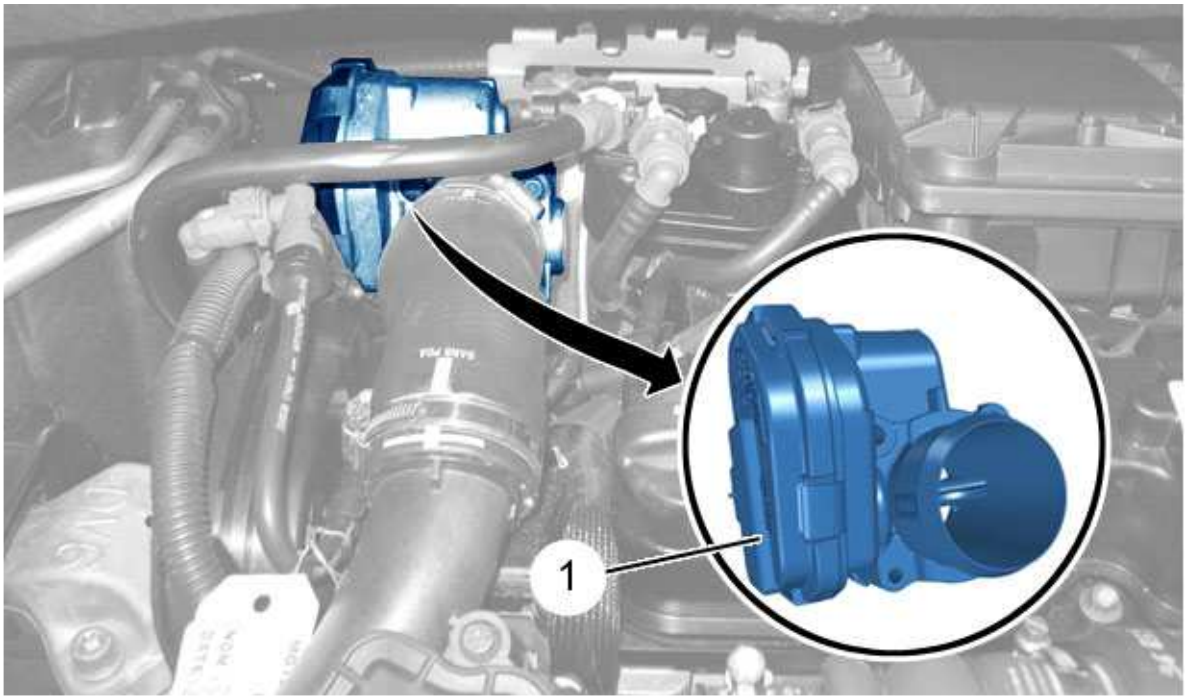

b1hg120d

(1) Inlet air metering unit .

3 - REMOVING

ESSENTIAL : Respect the safety and cleanliness recommendations that are specific to

high pressure diesel injection (HDi) engines

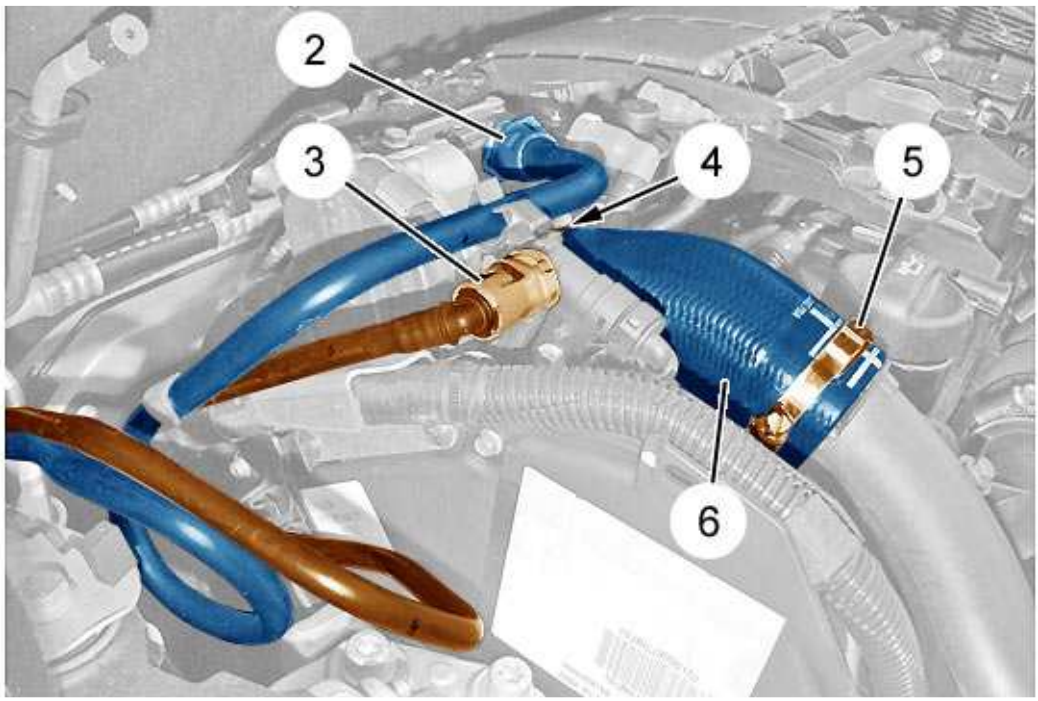

b1hg2ccd

Remove the engine style cover (according to equipment).

Disconnect, blank off and move aside : The fuel supply pipes (2), (3) ; Using the tools [0194-T].

Loosen the clips (4) and (5).

NOTE : Identify the position of the air duct (6)

Remove the air conduit (6).

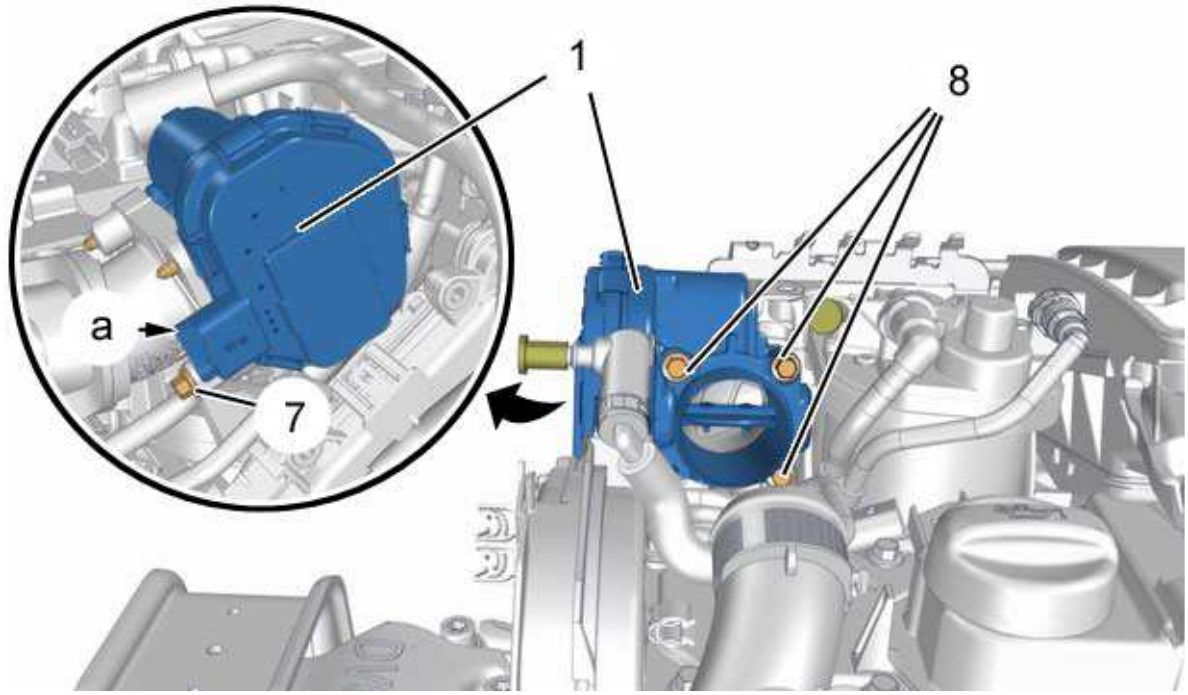

b1hg2cdd

Disconnect the connector (as "a").

Remove :

- The (7) bolt
- The bolts (8)
- The inlet air metering unit (1)

4 - REFITTING

> **WARNING :** Adhere to the tightening torques

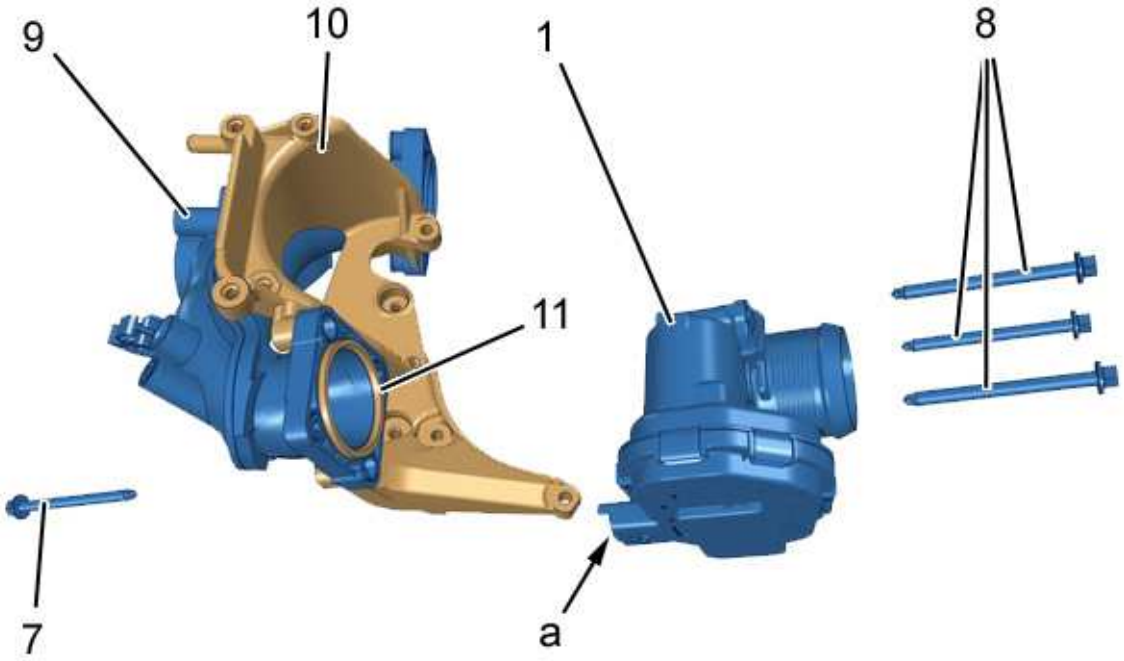

b1hg2ced

(1) Inlet air metering unit .

(9) Air inlet pipe.

(10) Fuel filter support.

(11) Seal .

> **WARNING :** Always replace the seal (11) ; Put a little oil on the seal faces (with engine oil)

Refit :

- Seal (11) (new)
- The inlet air metering unit (1)
- The bolts (8)
- The (7) bolt

Connect the connector (as "a").

Refit the air duct (6).

> **NOTE :** Ensure the the air duct (6) is positioned correctly

Tighten hose clips (4) and (5).

Remove the tools [0194-T].

Couple up : The fuel supply pipes (2), (3).

Operate the manual priming pump several times to prime the fuel circuit.

Refit the engine style cover (according to equipment).

REMOVING - REFITTING : OIL FILTER

ESSENTIAL : Observe the safety and cleanliness recommendations

WARNING : The oil filter must be replaced after the engine has been drained

1 - REMOVING

Drain the engine oil circuit.

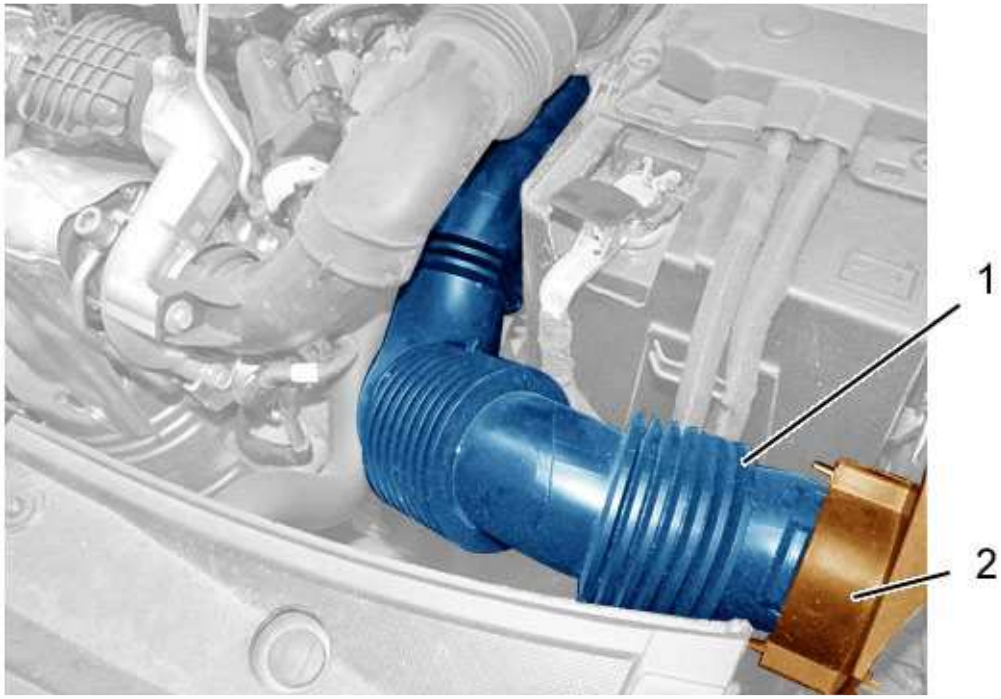

b1fg0cad

Remove the air deflector (2) and air inlet neck (1) assembly (according to equipment).



b1fg0cbd

Protect the area with absorbent paper or a clean rag.

NOTE : Move the electrical harnesses and the hoses aside (if necessary)

Remove the filter element protection cover (3).

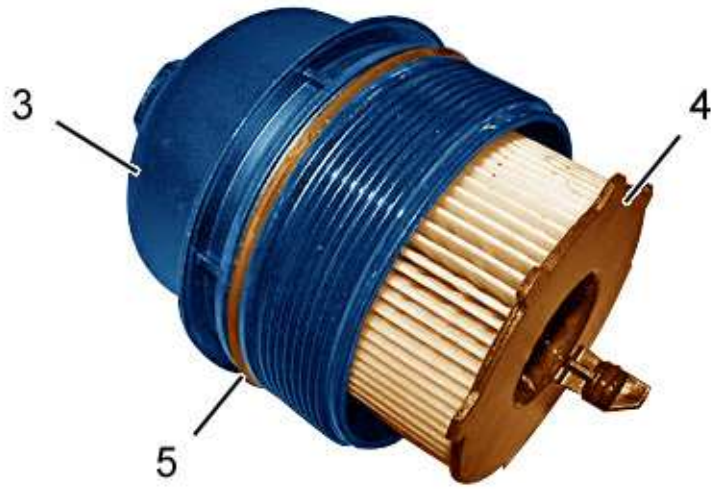

b1fg0cyd

Separate the filter element (4) from the cover (3).

Remove the seal (5).

2 - REFITTING

> **WARNING :** Adhere to the tightening torques

> **WARNING :** Always replace the filter element and its seal

2 - 1 - Preparation of the component

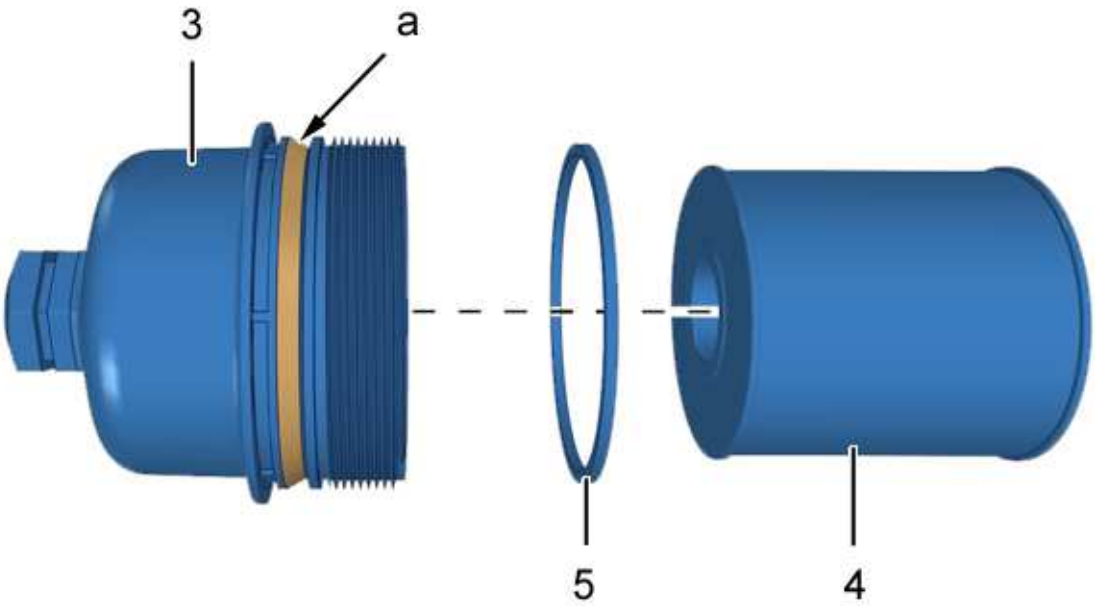

b1fg0cdd

Replace the seal (5) on the cover (3).

Lubricate the seal (5) ; With engine oil .

> **WARNING :** Ensure that the seal (5) is not twisted or damaged

Refit the seal (5) (at "a").

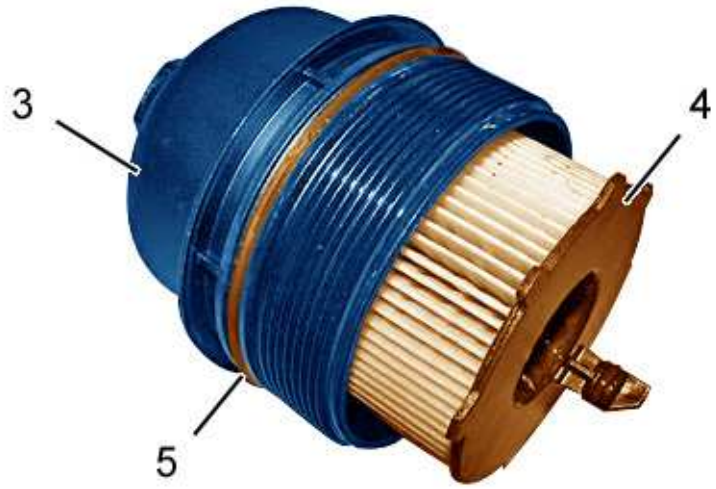

b1fg0cyd

NOTE : Check that the seal is in the correct position by passing your finger all around the seal

Refit the new filter element (4) on the cover (3).

2 - 2 - Refitting (Continued)

WARNING : Never use force in tightening the cover (3) (Risk of damaging the seal)

WARNING : Clean any drips of oil

Refit :

- The filter element protective cover (3)
- The air deflector (2) and air inlet duct (1) assembly (according to equipment)

Fill the engine oil and check the level.

REMOVING - REFITTING : AIR INLET PIPE

ESSENTIAL : Observe the safety and cleanliness recommendations

1 - PARTS WHICH MUST ALWAYS BE REPLACED

Designation	Quantity
Seals (Air inlet pipe)	2

2 - LOCATION

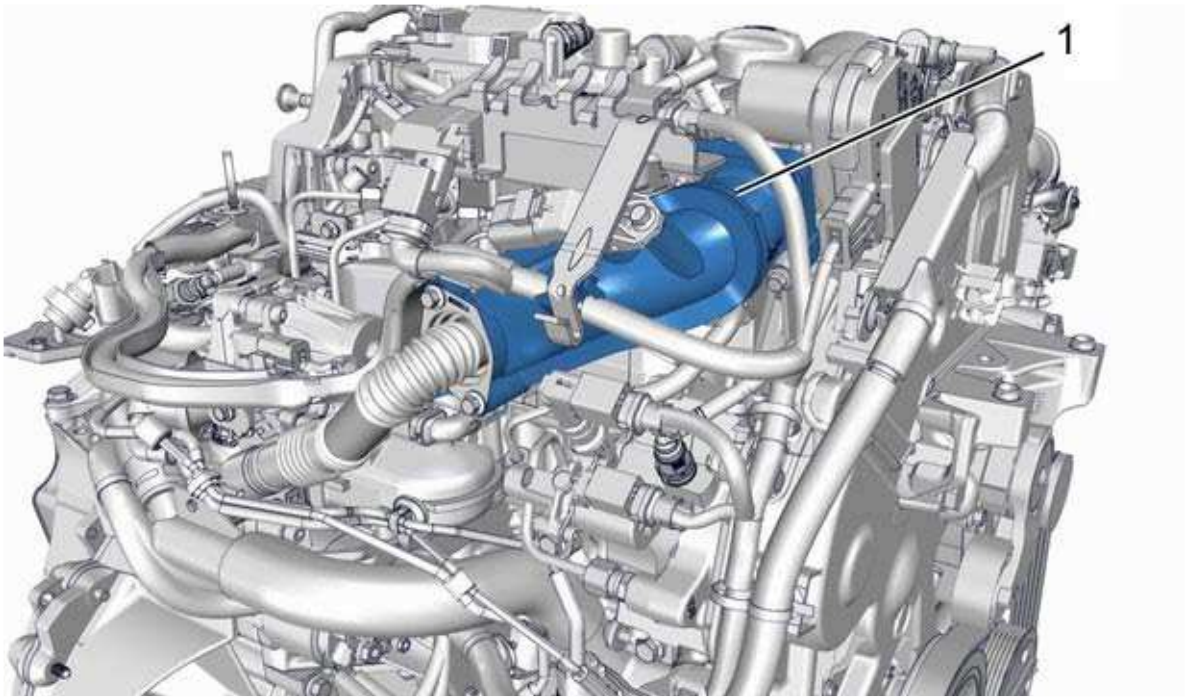

b1hg3svd

(1) Air inlet pipe.

3 - REMOVING

ESSENTIAL : Respect the safety and cleanliness recommendations that are specific to high pressure diesel injection (HDi) engines

Disconnect the ancillaries battery.

Remove the engine style cover (according to equipment).

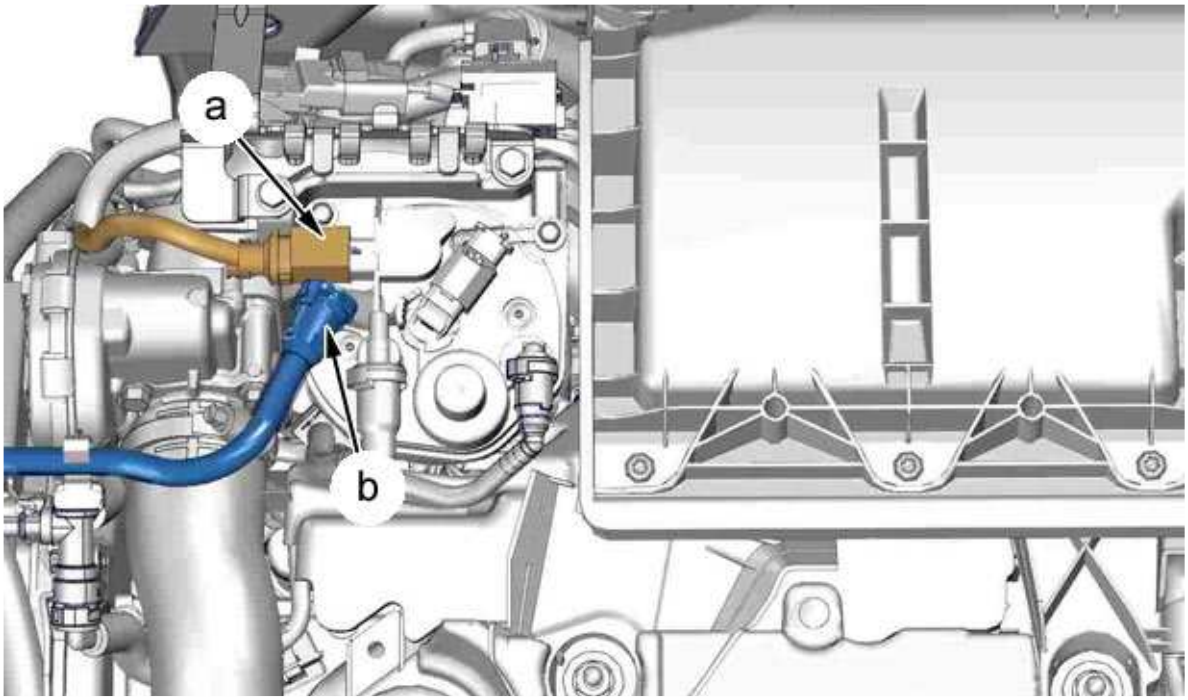

b1hg3std

Disconnect the connector (at "a").

Uncouple connection (at "b").

Remove :

- The air filter box
- The exhaust gas recycling module
- The inlet air metering unit

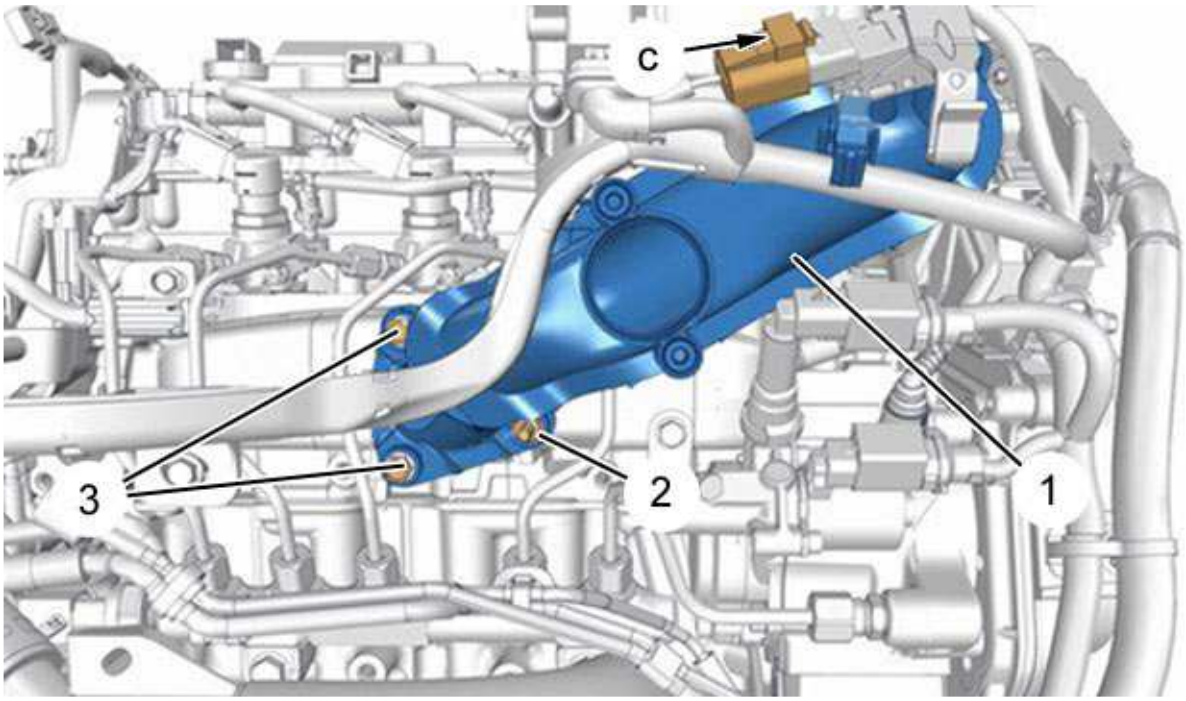

b1hg3sud

Disconnect and move aside the connector (at "c").

Remove :

- The bolts (3)
- The stud (2)
- The air inlet pipe (1)

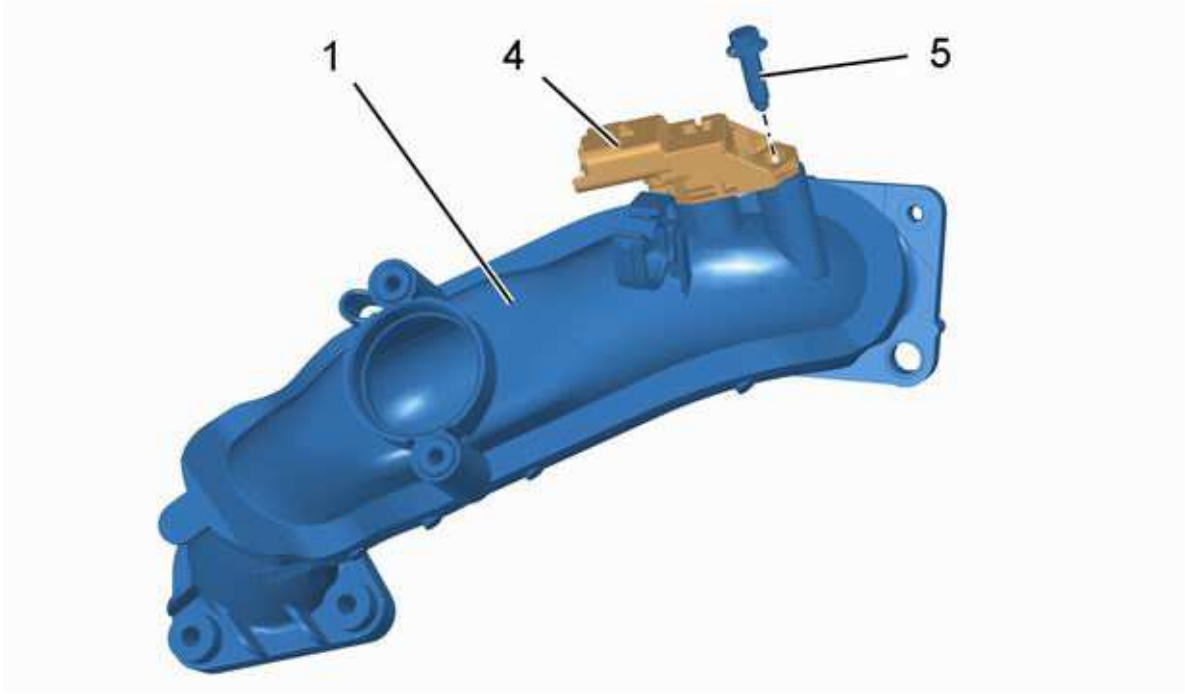

b1hg1fdd

Remove :

- The (5) bolt
- The turbocharging pressure sensor (4)

4 - REFITTING

WARNING : Adhere to the tightening torques

ESSENTIAL : Respect the safety and cleanliness recommendations that are specific to high pressure diesel injection (HDi) engines

WARNING : At refitting, all the removed seals must be replaced with new seals

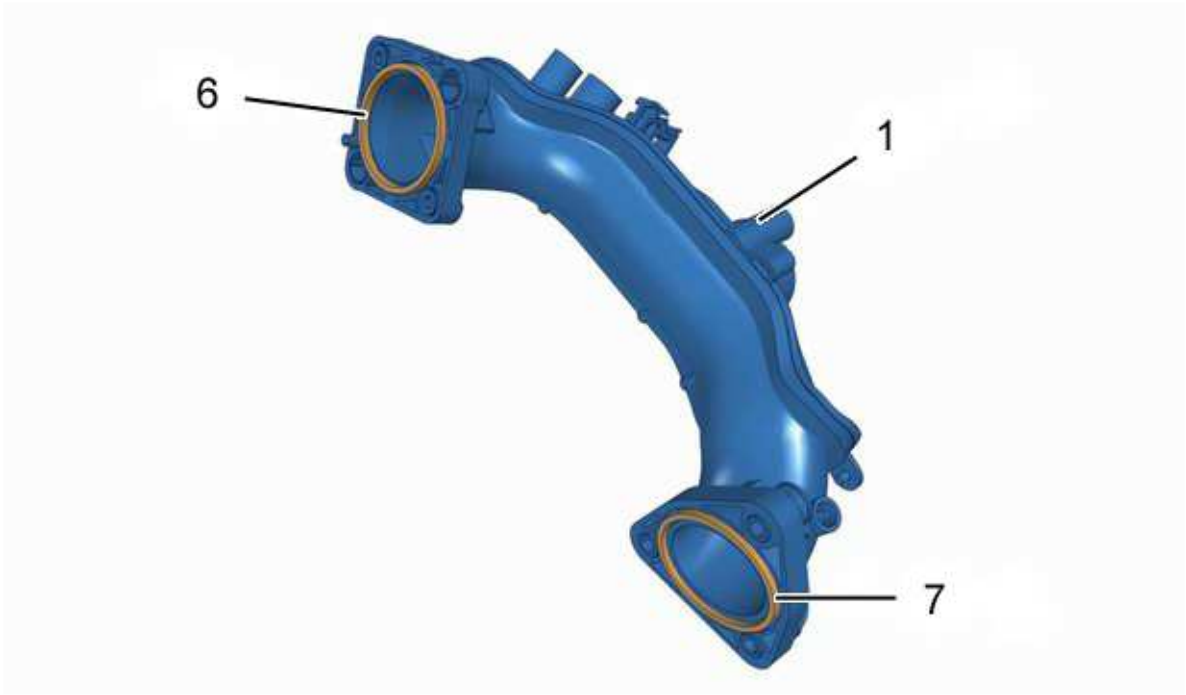

b1hg1fid

Always replace the seals (6), (7) ; Lightly lubricate the seals ; With engine oil .

Refit :

- The turbocharging pressure sensor (4)
- The (5) bolt
- The air inlet pipe (1)
- The stud (2)
- The bolts (3)

Reconnect the connector (at "c").

Refit :

- The inlet air metering unit
- The exhaust gas recycling module
- The air filter box

Couple the union (at "b").

Connect the connector (at "a").

Refit the engine style cover (according to equipment).

> **WARNING :** Perform the operations that are required following a reconnection of the ancillaries battery

Reconnect the ancillaries battery.

5 - CHECKING

Start the engine.

Check the sealing of the assembly.

MODIFICATION : TURBOCHARGER LUBRICATION PIPE BANJO BOLT

Engines concerned :

- DV4 engines all types
- DV6 engines all types

Application : Immediate.

1 - MODIFICATION

Replacement of the lower banjo bolt on the turbocharger lubricating pipe with a banjo bolt that has a removable, larger-capacity, strainer filter.

1 - 1 - Previous assembly

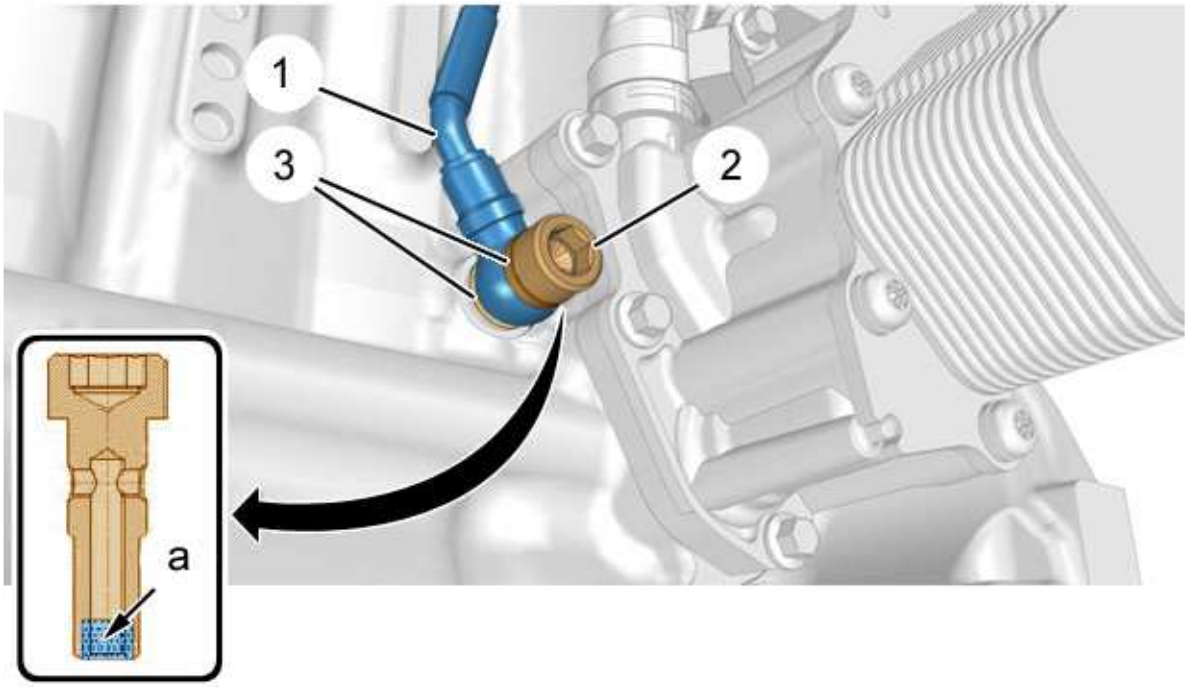

b1ht00pd

"a" Integral strainer filter.

(1) Turbocharger lubricating pipe.

(2) Banjo bolt with integral strainer filter.

(3) Seals.

1 - 2 - New assembly

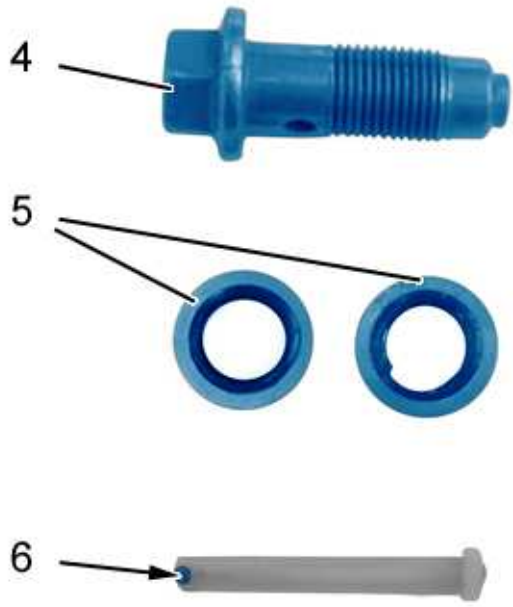

b1ht00qd

(4) Banjo bolt .

(5) Seals.

(6) Removable strainer filter.

2 - REPAIR

2 - 1 - Previous assembly

If removing the turbocharger, replace the old banjo bolt (2) with the new banjo bolt (4) fitted with the removable strainer filter (6).

Refit :

- The banjo bolt (4) fitted with the strainer filter (6)
- The seals (5) (new)

2 - 2 - New assembly

If removing the turbocharger, check the condition of the strainer filter (6).

If the removable strainer filter (6) is clogged, replace the assembly of bolt (4) and removable strainer filter (6).

Refit :

- The banjo bolt (4) fitted with the strainer filter (6)
- The seals (5) (new)

3 - REPLACEMENT PARTS

From now on the Replacement Parts Department supplies only new parts.

IDENTIFICATION - DATA : UNDER ENGINE

1 - CYLINDER BLOCK

1 - 1 - Identification marking

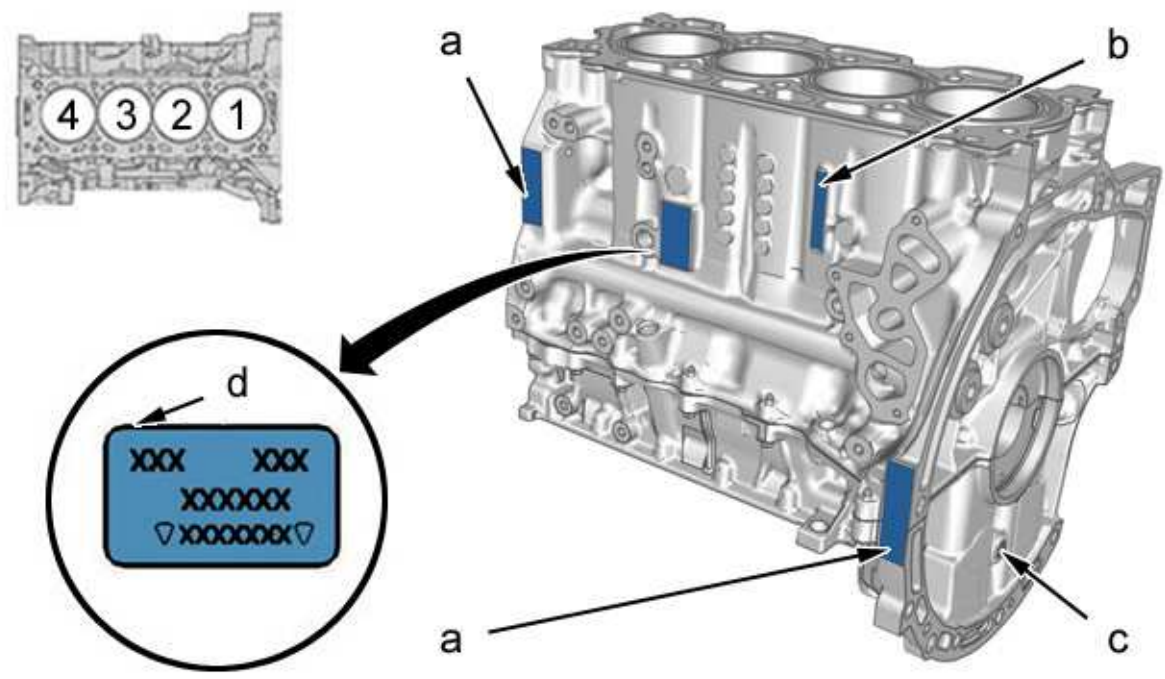

b1bb1h3d

Engraving (at "a") :

- Engraving of the crankshaft bearings diameter category
- Bearing orientation (clutch to timing)

Engraving (at "b") :

- Machining reference
- Year of manufacture

Engine flywheel immobilisation hole (at "c").

Engraving (at "d") :

- Constructor's reference
- Legislation type
- Identification marking
- Serial number

The cylinders are marked from 1 to 4 (Bearing n°1 ; Flywheel side).

1 - 2 - Data

Cylinder block :

- Material : Aluminium alloy
- Cast iron liners inserted during casting (foundry)
- Cylinder bore, diameter : 75 mm

Crankshaft main bearing cap casing :

- Material : Aluminium alloy
- cast iron bearing caps inserted during casting
- Fixing : 26 bolts (10 : M9 x 125 and 16 : M6 x 100) 10 solid pins

Aluminium alloy cylinder block with cast iron liners inserted at the foundry.

Aluminium alloy bearing cap housing with cast iron bearing caps inserted during the casting process.

The cylinder block has removable piston head spray jets.

The cylinder block has 5 bearings.

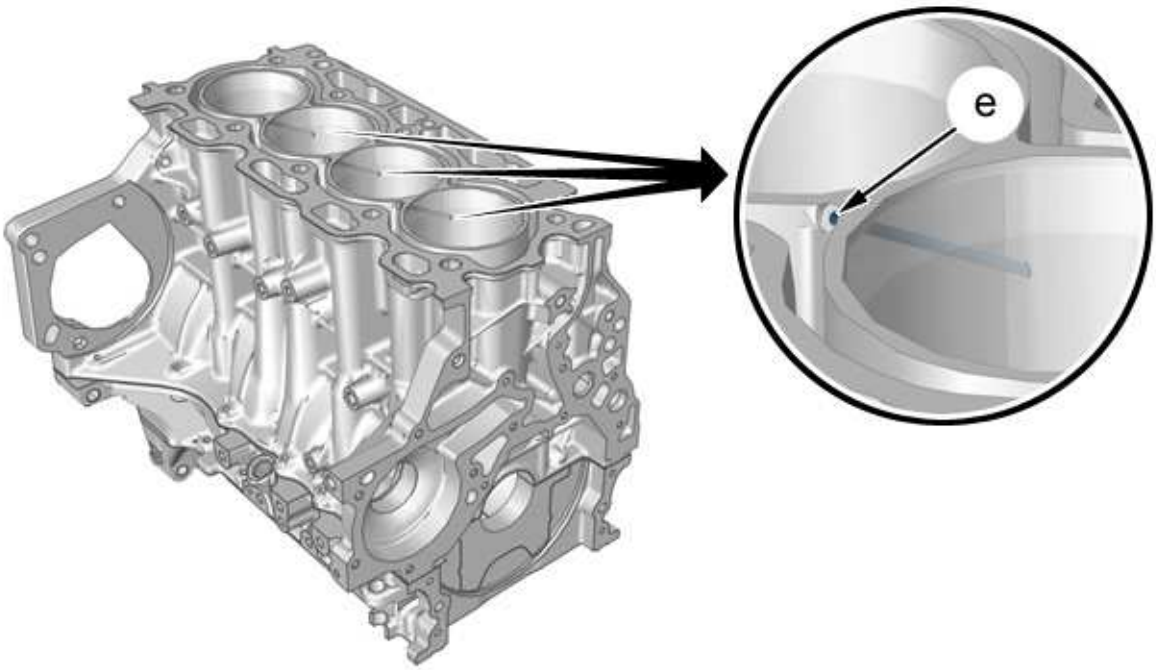

b1bb1h4d

"e" : Top of cylinder coolant hole ; Diameter : 2,5 mm .

The cylinder block is non-repairable.

1 - 3 - Cylinder block height and flatness

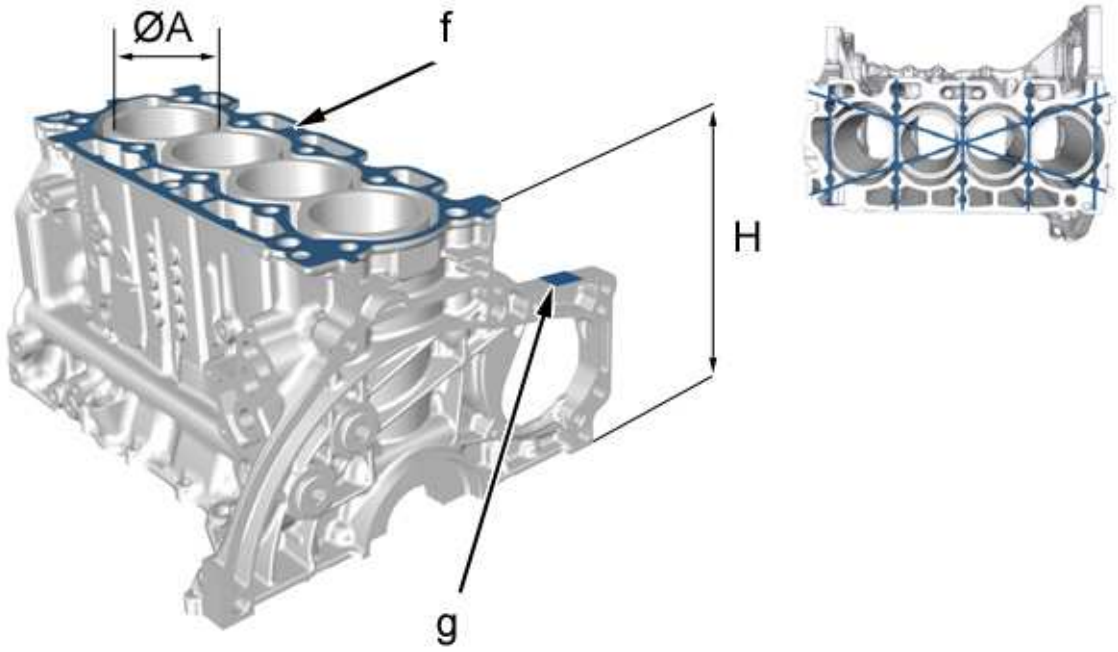

b1bb1h5d

"f" Cylinder block flatness checking zone (Cylinder head sealing face).

"g" "reconditioning" marking zone.

DV engines all types	Nominal dimension	Repair size
Height "H"	221,9 mm ± 0,05 mm	221,66 mm ± 0,05 mm
Diameter "A"	75 (+ 0,018 ; -0) mm	75,4 (+ 0,018 ; -0) mm
Overall flatness (at "f")	0,042 mm	-

NOTE : Checking the flatness is done with the aid of a checking ruler and a set of shims (see figure below)

2 - CRANKSHAFT

2 - 1 - Identification

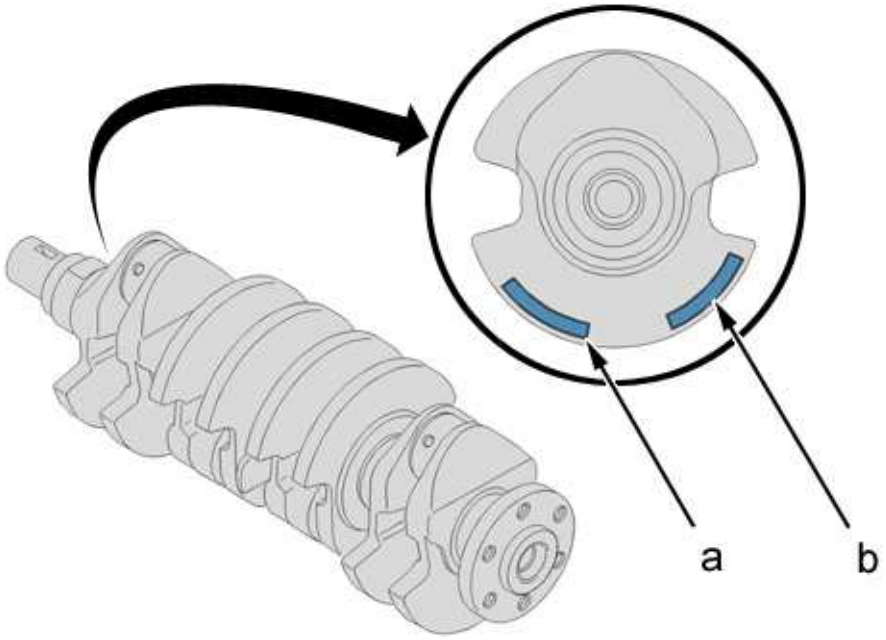

b1cp0fbd

"a" Classes of crankshaft main bearing journals (marking by ink jet).

"b" Machining marking (marking by electric pencil).

Reference	Repair reference
"M"	4 crankshaft big end journals
"T"	5 crankshaft main bearing journals
"FB	2 contact faces of the stop bearing
"JE"	Seal surface (clutch side)
"JD"	Seal surface (timing side)

2 - 2 - Data

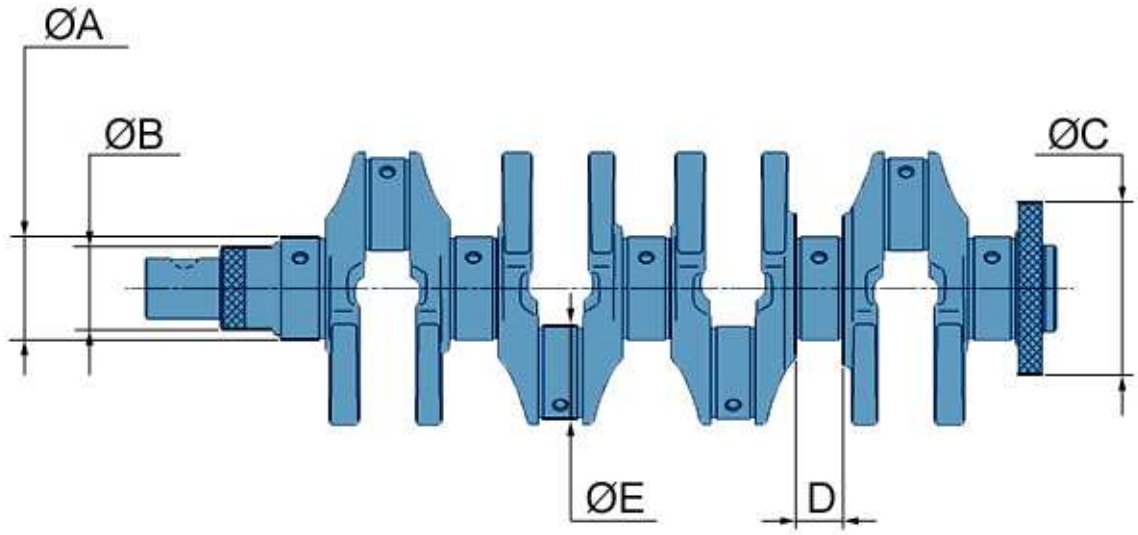

b1cp0fcd

Main bearing journals		
Diameter "A"	DV4 engine	DV6 engine
Nominal dimension	49,981 (0 ; - 0,19) mm	49,981 (0 ; - 0,19) mm
Repair size	49,681 (0 ; - 0,19) mm	49,681 (0 ; - 0,19) mm

Sealing (timing side)		
Diameter "B"	DV4 engine	DV6 engine
Nominal dimension	40 (0 ; - 0,16) mm	40 (0 ; - 0,16) mm
Repair size	39,8 (0 ; - 0,16) mm	39,8 (0 ; - 0,16) mm

NOTE : The regrinding of diameter B, necessitates the fitting of a new sealing ring

Sealing (clutch side)		
Diameter "C"	DV4 engine	DV6 engine
Nominal dimension	85 (0 ; - 0,22) mm	85 (0 ; - 0,22) mm
Repair size	84 (0 ; - 0,22) mm	84,8 (0 ; - 0,22) mm

NOTE : The regrinding of diameter C, necessitates the fitting of a new sealing ring

Crankshaft bearing width		
Diameter "D"	DV4 engine	DV6 engine
Nominal dimension	23,39 (+ 0,052 ; 0) mm	23,39 (+ 0,052 ; 0) mm
Repair size	Without	Without

Crankshaft big end journals		
Diameter "E"	DV4 engine	DV6 engine
Nominal dimension	45 (- 0,009 ; - 0,025) mm	47 (- 0,009 ; - 0,025) mm
Repair size	44,7 (- 0,009 ; - 0,025) mm	46,7 (- 0,009 ; - 0,025) mm

2 - 3 - Crankshaft end float

The endfloat is adjusted by 2 thrust washers on bearing n°2.

Crankshaft end float washers		
Thickness	DV4 engine	DV6 engine
Nominal dimension	2,4 ± 0,05 mm	2,4 ± 0,05 mm
Repair size	Without	Without

3 - CRANKSHAFT HALF BEARING SHELLS

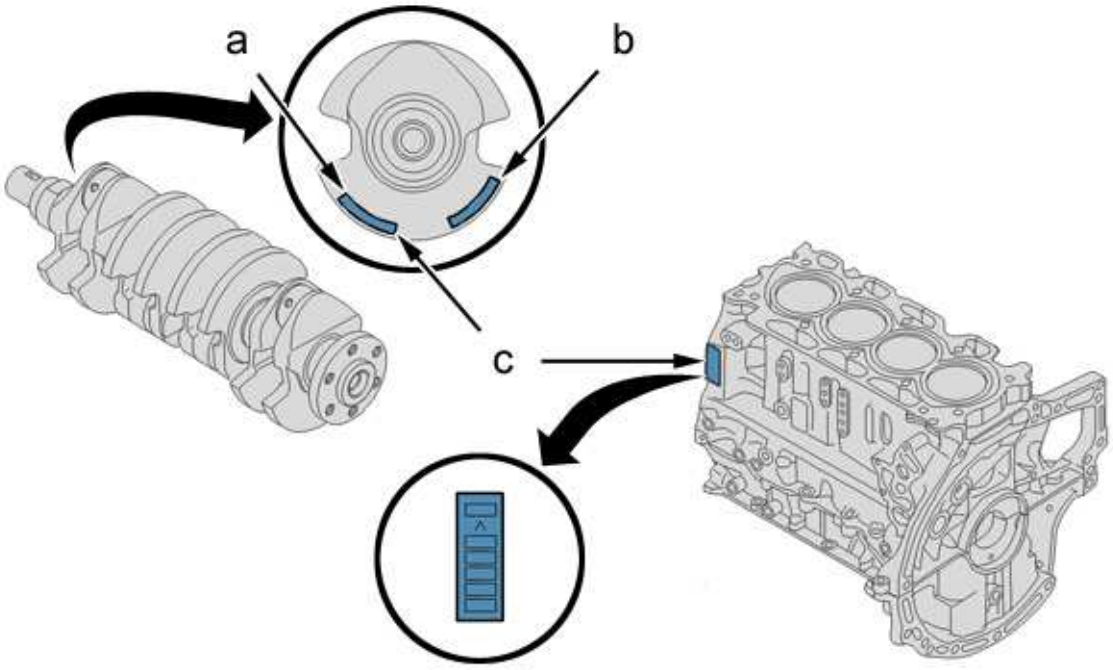

b1cp0fdd

"a" Marking of the crankshaft bearing classes on the crankshaft.

"b" Marking of the classes of crankshaft bearings on a reground crankshaft.

"c" Marking of the classes of crankshaft bearings on the crankshaft and cylinder block.

The operating clearances of the crankshaft bearings are obtained from the creation of 3 classes of smooth lower bearing shell (crankshaft bearing cap casing side).

3 - 1 - Upper bearing shells (grooved)

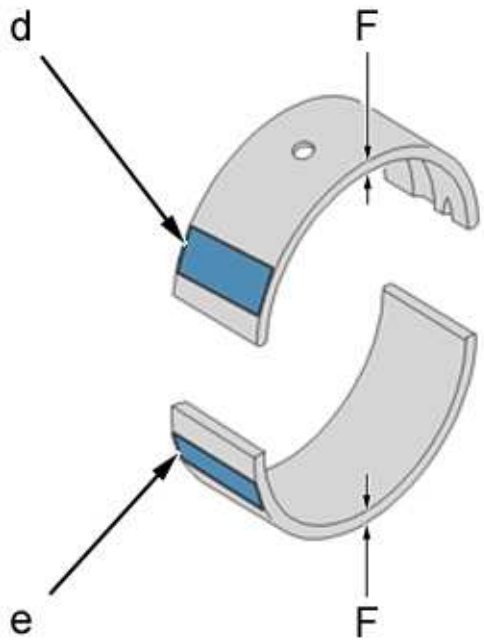

b1bb1h6d

There is only one class of grooved upper crankshaft bearing shell (cylinder block side).

The grooved upper half-shells are marked at "d" by a product number.

Upper bearing shells (grooved) / DV4 and DV6 engines		
-	Nominal dimension	Repair size
Distance "F"	1,834 ± 0,003 mm	1,984 ± 0,003 mm
Reference "d"	371606	844592
Colour identification	Orange	Without

3 - 2 - Lower bearing shells (smooth)

> **NOTE :** The positioning of the lower bearing shells necessitates use of a specific tool, Part No. [0194-Q]

The crankshaft bearing lower half-shells are marked at "e" by a colour mark.

The selection of the appropriate half-shell must be carried out using a pairing table with the marks "a" and "c".

The first character corresponds to bearing N°5, the second to bearing N°4, and so on.

> **NOTE :** The crankshaft main bearings are marked from 1 to 5 (Bearing n°1 ; Flywheel side)

3 - 3 - Matching table

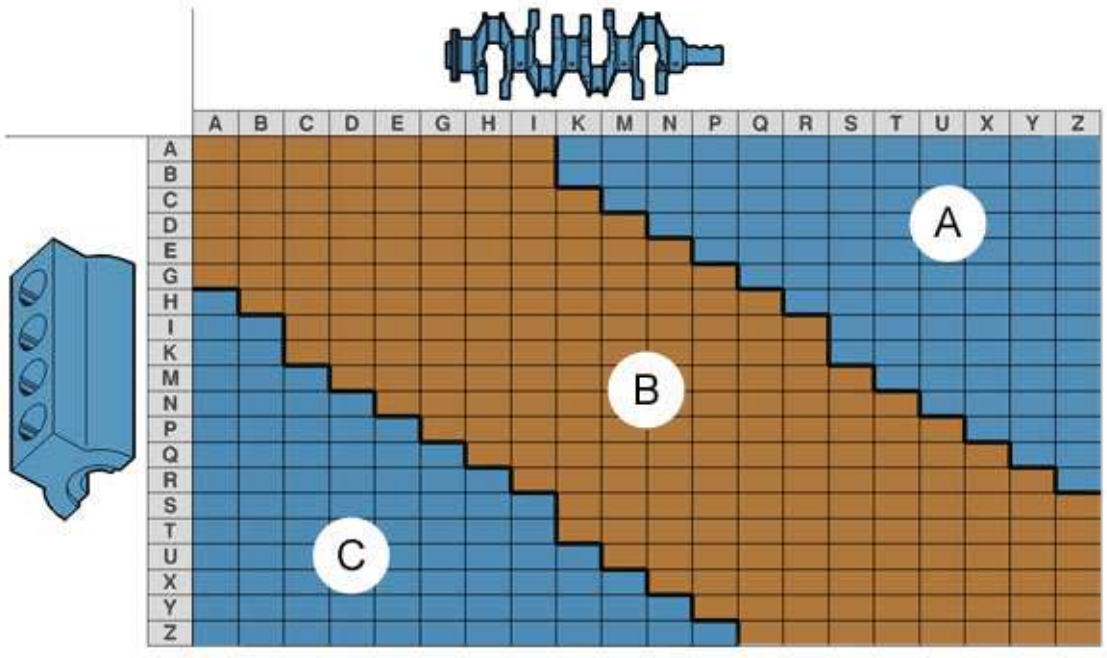

b1cp0ffd

Zone "A" / DV4 and DV6 engines		
-	Nominal dimension	Repair size
Distance "D"	1,822 ± 0,003 mm	1,972 ± 0,003 mm
Colour identification marking at "e"	White or blue	Blue

Zone "B" / DV4 and DV6 engines		
-	Nominal dimension	Repair size
Distance "D"	1,834 ± 0,003 mm	1,984 ± 0,003 mm
Colour identification marking at "e"	Yellow or black	Black

Zone "C" / DV4 and DV6 engines		
-	Nominal dimension	Repair size
Distance "D"	1,846 ± 0,003 mm	1,996 ± 0,003 mm
Colour identification marking at "e"	Brown or green	Green

3 - 4 - Thrust washers

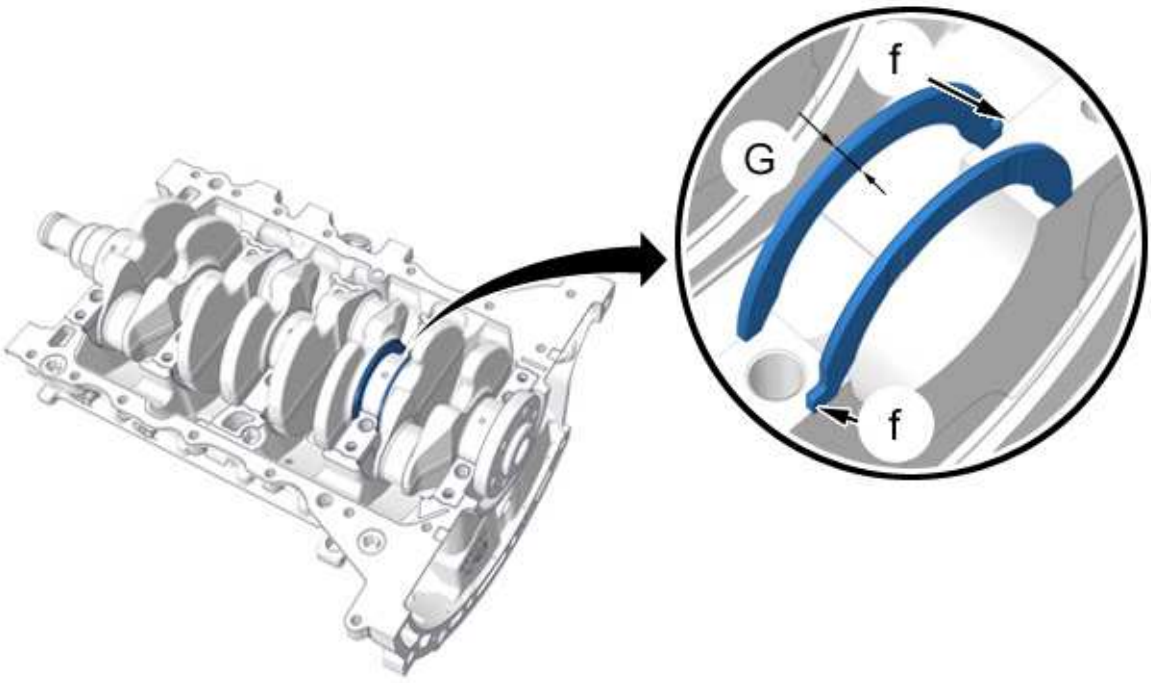

b1bb1h7d

"d" Positioning lug .

"g" Thickness of the thrust bearings.

The grooves are oriented towards the crankshaft.

The crankshaft lateral clearance is adjusted by means of thrust washers on bearing No. 2.

There should be a 0,07 to 0,32 mm endfloat.

NOTE : The crankshaft main bearings are marked from 1 to 5 (bearing N°1, flywheel side)

Designation	Nominal dimension
Thickness of the thrust bearings "g"	2,40 mm (+0,05 ; 0)

4 - CONRODS - CONNECTING ROD HALF SHELLS

4 - 1 - Conrods

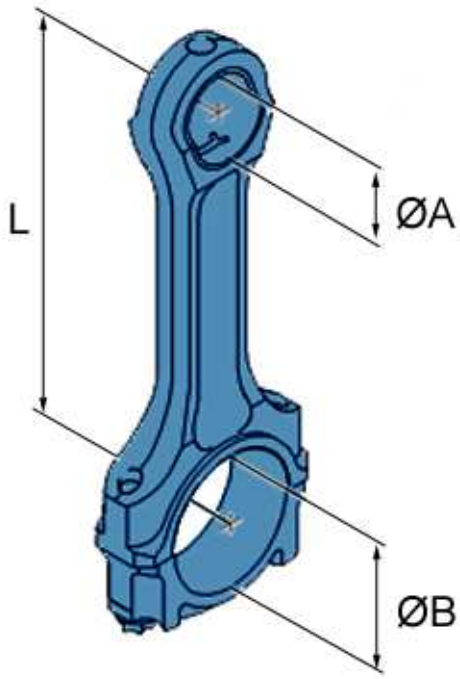

b1bb1h8d

-	DV4 engine	DV6 engines
Diameter "A"	25 (+0,020 ; +0,007) mm	26 (+0,020 ; +0,007) mm
Diameter "B"	48,655 (+0,016 ; 0) mm	50,655 (+0,019 ; 0) mm
"L" length	126,8 ± 0,025 mm	136,8 ± 0,025 mm

4 - 2 - Connecting rod half shells

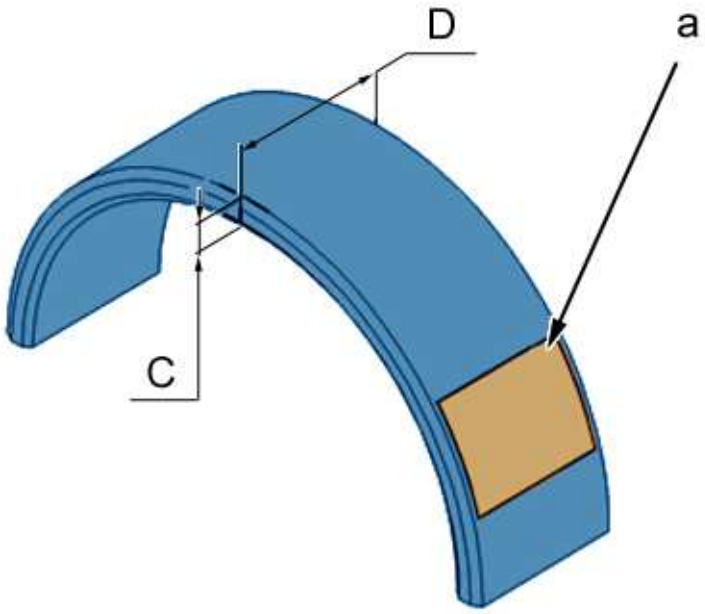

b1bb1h9d

Reference at "a" : Area of marking.

	DV4 engine	DV6 engines
Nominal dimension "C"	1,815 ± 0,05 mm	1,815 ± 0,05 mm
Repair size "C"	Without	1,965 ± 0,05 mm
Width "D"	17 (+0,05 ; -0,2) mm	17 (0 ; - 0,25) mm

5 - PISTONS ; PISTON RINGS ; THE PISTON SHAFT

5 - 1 - Identification

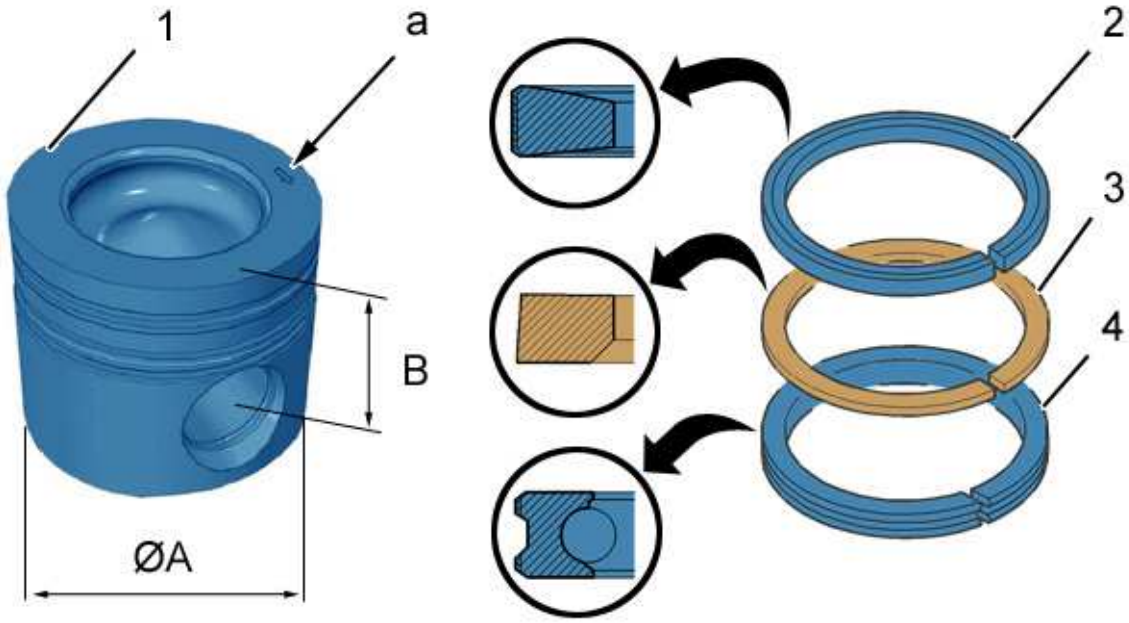

b1bb1had

Engraving (at "a") : Piston orientation.

(1) Aluminium alloy piston .

(2) Trapezoidal upper ring.

(3) Tapered lower ring.

(4) Trapezoidal scraper ring with spring.

5 - 2 - Piston

Dimensions	DV4 engine	DV6 engine
Diameter "A" : Nominal dimension	73,528 ± 0,075 mm	74,945 ± 0,075 mm
Diameter "A" : Repair size	73,928 ± 0,075 mm	75,345 ± 0,075 mm
Height "B"	42,944 ± 0,025 mm	41,7 ± 0,025 mm
Piston gudgeon pin offset	0,4 ± 0,075 mm	

5 - 3 - Piston rings

DV4 engine	Compression ring	Sealing ring	Scraper ring
Colour identification : Nominal dimension	Yellow	Blue	Mauve
Colour identification : Repair size	-	-	-
Clearance at the gap	0,2 to 0,35 mm	0,8 to 1 mm	0,2 to 0,4 mm
Thickness	2,5 mm	1,95 mm	2,5 mm

DV6 engine	Compression ring	Sealing ring	Scraper ring
Colour identification : Nominal dimension	Red	Green - Light blue	Yellow - Green
Colour identification : Repair size	Orange	Pink	Mauve
Clearance at the gap	0,15 to 0,25 mm	0,3 to 0,5 mm	0,35 to 0,55 mm
Thickness	2,83 mm	1,95 mm	2,50 mm

5 - 4 - The piston shaft

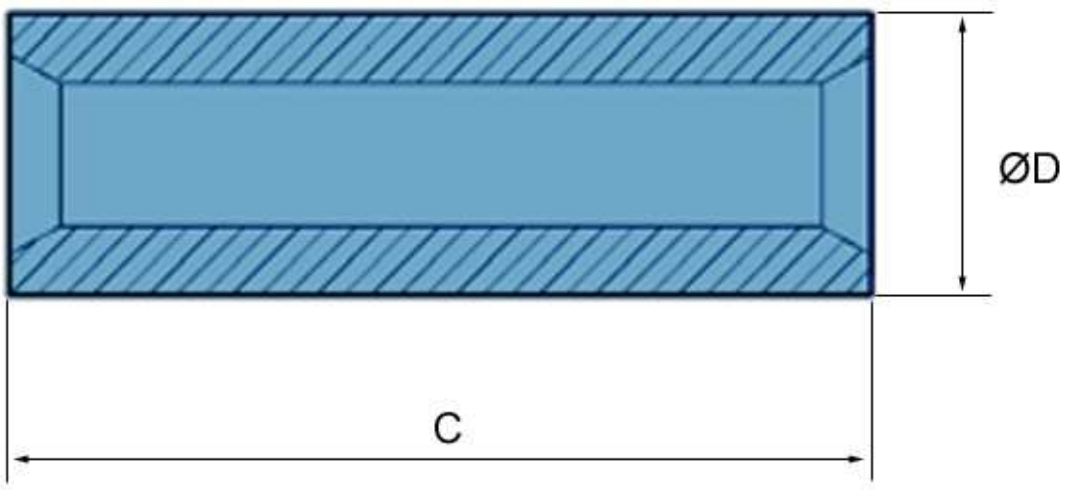

b1bb1hbd

Dimensions	DV4 engine	DV6 engine
"C" length	60 (0 ; -0,3) mm	61 (0 ; -0,3) mm
Diameter "D"	25 (0 ; -0,005) mm	26 (0 ; -0,005) mm

NOTE : The gudgeons pins are fitted free in the little ends and in the pistons. The gudgeon pins are immobilised in translatory motion by two stop rings

6 - PISTON HEAD SPRAY JETS

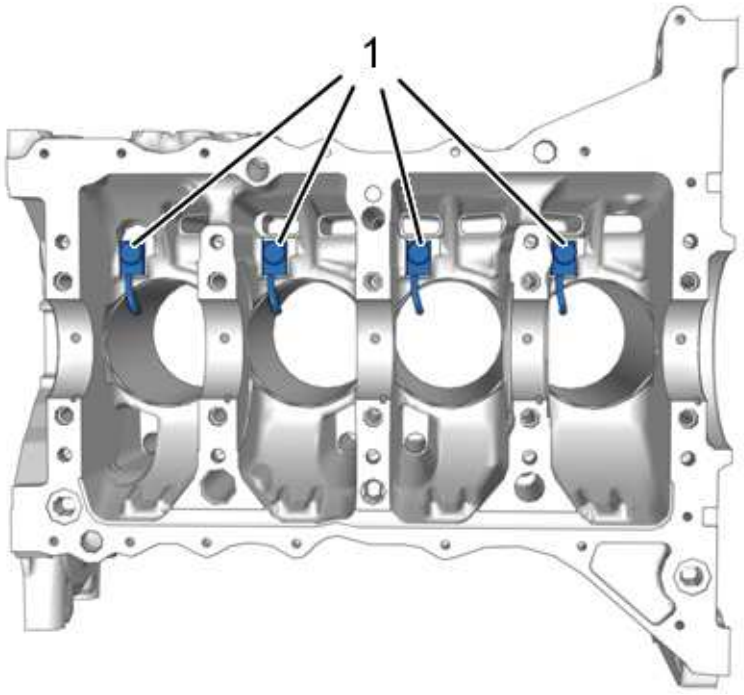

b1bb1hcd

The piston head spray jets (1) are removable and replaceable.

IDENTIFICATION - DATA : ENGINE TOP

1 - CYLINDER HEAD

1 - 1 - Identification

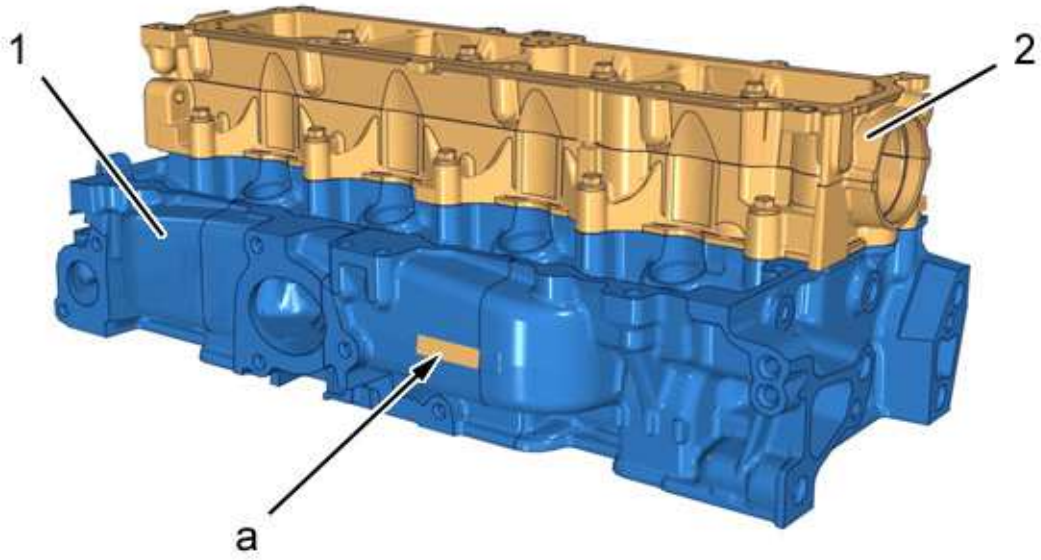

b1bb1hxd

"a" Identification of the cylinder head.

(1) Cylinder head.

(2) Camshaft housing.

1 - 2 - Data

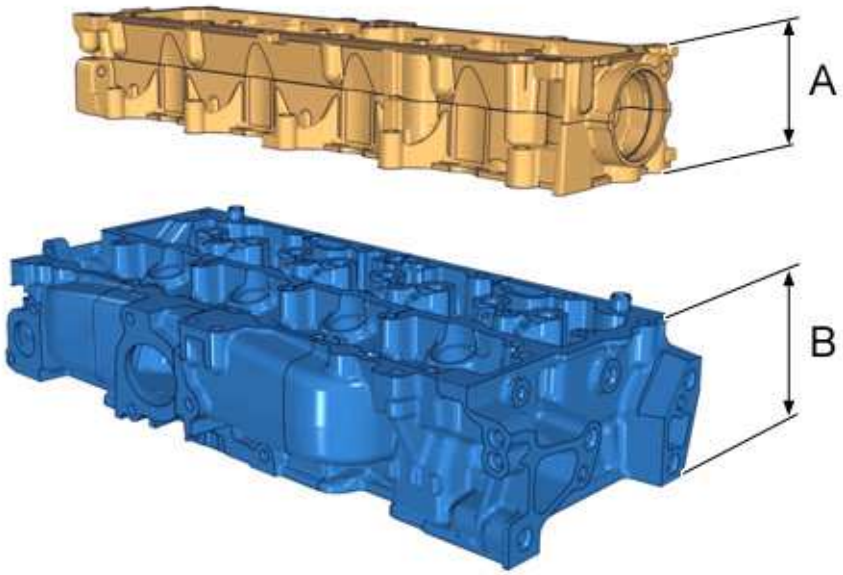

b1bb1hyd

Height of the cylinder head and of the camshaft bearing caps	
Designation	Value
Nominal height "A"	66 mm
Nominal height "B"	88 mm
Max. out-of-true	0,03 mm
Machining permitted	No straightening permitted

Special features :

- Material : Aluminium alloy
- 2 valves per cylinder
- Air inlet manifold (fuel high pressure common injection rail)
- Exhaust manifold : Oil filter side
- Valve seats : Sintered steel
- Inlet valve guides : Sintered steel
- Exhaust valve guides : Sintered steel
- No grinding is permitted on the joint planes of the cylinder head

Cylinder head mounted on the cylinder block by 10 TORX bolts.

The exhaust manifold is retained by 10 studs and 10 copper-plated nuts with spacers.

1 - 3 - Camshaft housing

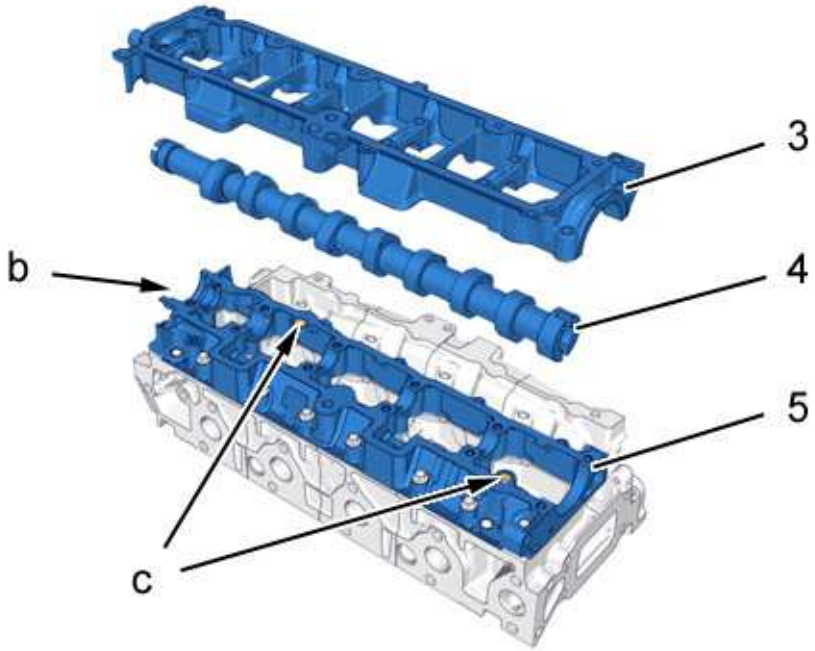

b1bb1hzd

"b" : Centring groove.

"c" : Centralising pin.

(3) Upper camshaft bearing casing.

(4) Camshaft.

(5) Lower camshaft bearing casing.

The camshaft carrier :

- (3) Upper camshaft bearing casing
- (5) Lower camshaft bearing casing

Material : Aluminium alloy.

Seal between the camshaft bearing cap housing and the cylinder head : Seal paste.

The 2 bearing casings are assembled by 10 bolts.

Both casings (3) and (5) are positioned on the cylinder head by 2 split pins and secured by 13 bolts ((M6x10)).

The camshaft is positioned in the cap casing by means of a centring channel "b" next to the bearing on the timing side.

1 - 4 - Camshaft bearing journals

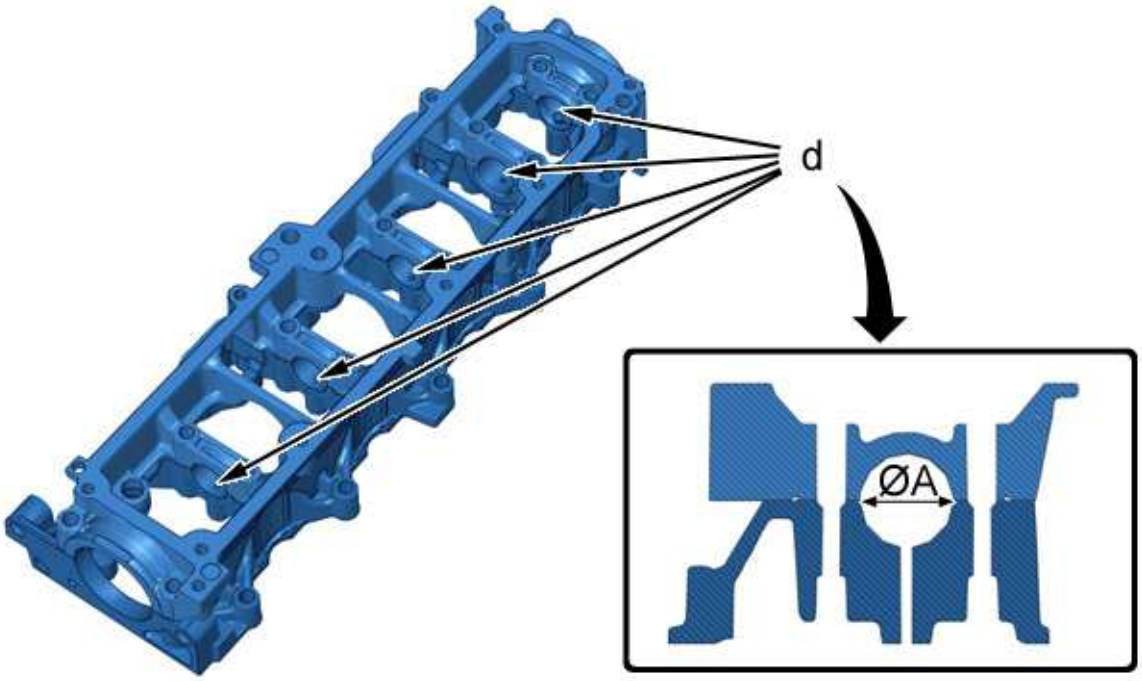

b1bb1i0d

"d" Camshaft bearing journals.

Designation	Value
Diameters of the bearings "A"	24,015 (+0,033 ; 0) mm

1 - 5 - Flatness of the cylinder head

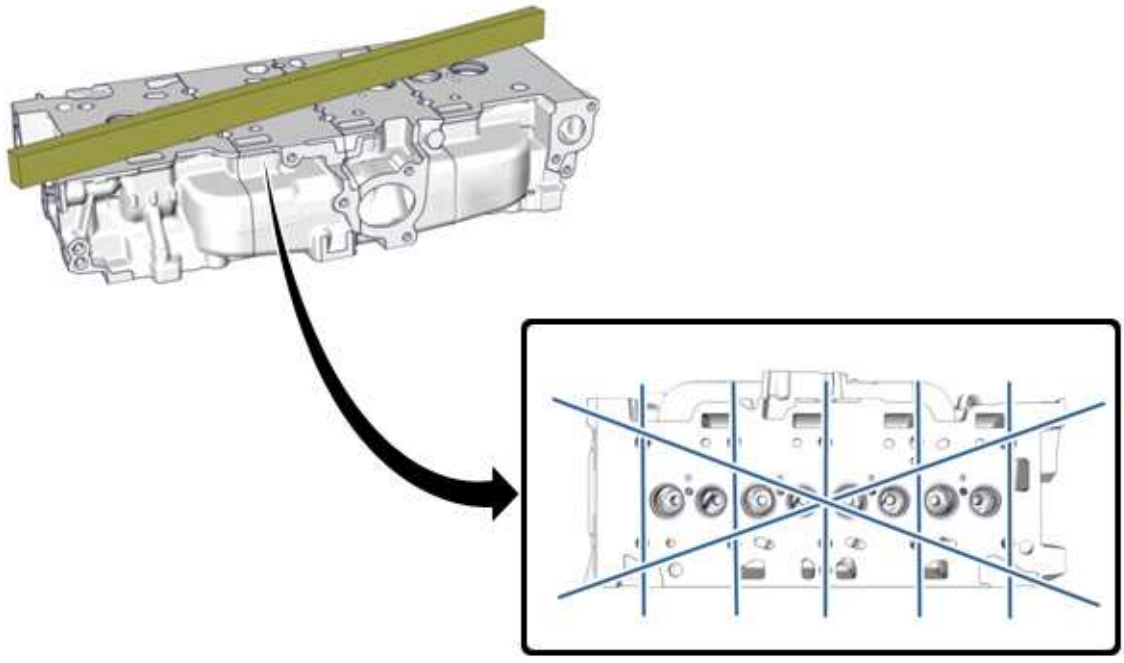

b1bb1i1d

The flatness of the cylinder head is checked with a ruler (as shown on the illustration).

Maximum permissible bow = 0,03 mm.

WARNING : If there is distortion greater than the permitted value, check the valve pocketing then remove the valves if they stand proud of the cylinder seal face

1 - 6 - Anti-return valve

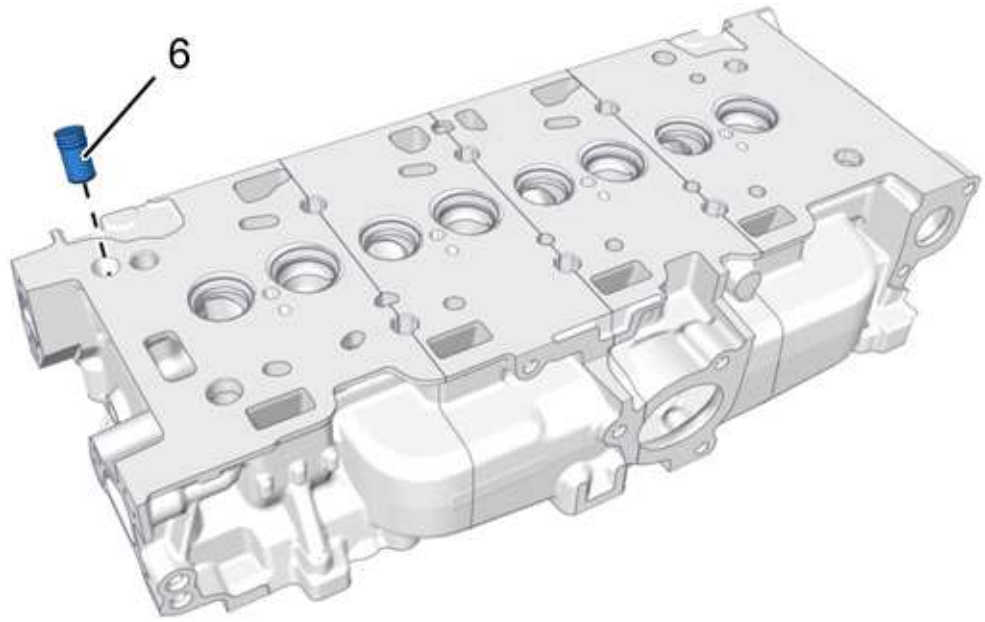

b1bb1i2d

The non-return valve (6) is force-fitted into the cylinder head.

1 - 7 - Cylinder head gasket

The choice of the class of cylinder head gasket takes account of how far the pistons protrude beyond the seal face of the cylinder block.

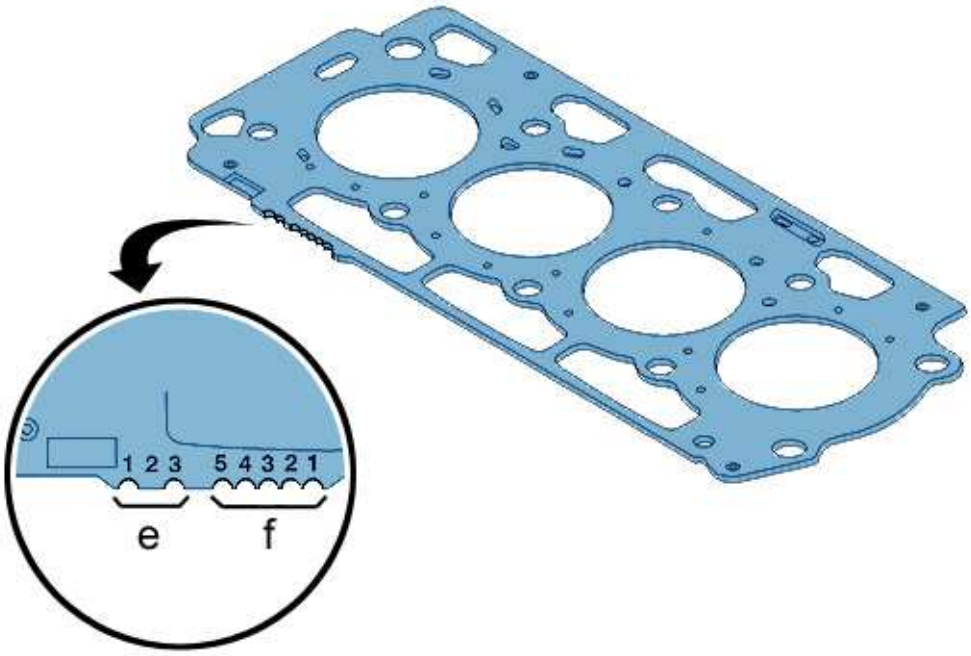

b1bb1i3d

"e" manufacturer identification mark.

"f" Thickness identification .

Piston protrusion(mm)	Thickness	Number of notches at "f"
0,533 to 0,634	1,25 mm	(1 + 2)
0,635 to 0,684	1,30 mm	(1 + 2 + 3)
0,685 to 0,734	1,35 mm	(1)
0,735 to 0,784	1,40 mm	(1 + 2 + 3 + 4)
0,785 to 0,886	1,45 mm	(1 + 2 + 3 + 4 + 5)

1 - 8 - Cylinder head bolts

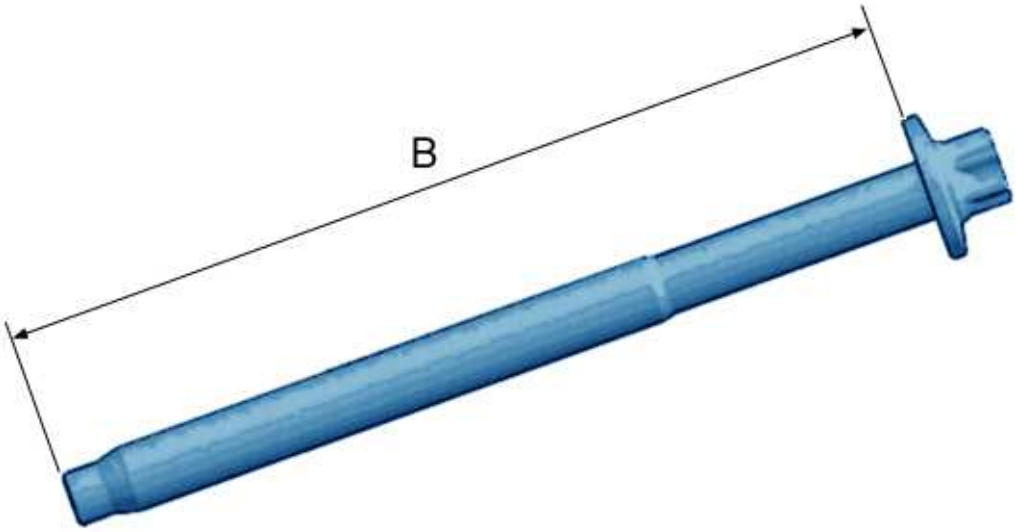

b1bb1i4d

WARNING : The cylinder head bolts can only be re-used once maximum

The length of bolts under heads "B" must be less than or equal to 149 mm.

2 - CAMSHAFT

2 - 1 - Valve control

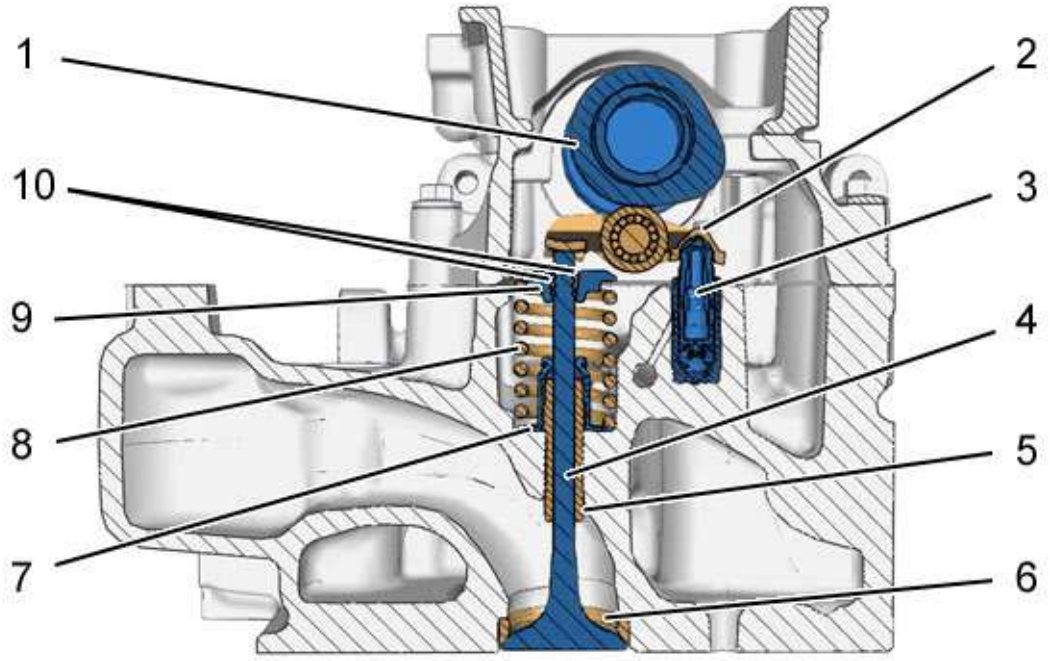

b1bb1i5d

(1) Camshaft.

(2) Roller valve rockers.

(3) Hydraulic tappet with automatic wear adjustment.

(4) Inlet and outlet valves.

(5) Valve guides.

(6) Valve seats.

(7) Valve stem seals.

(8) Valve springs.

(9) Valve spring compressor cup .

(10) Valve half-cones.

2 - 2 - Data

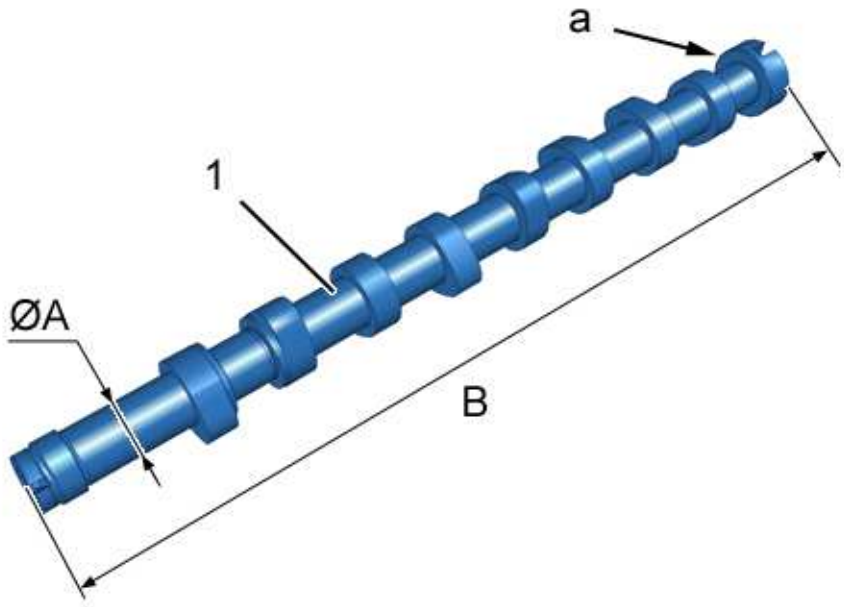

b1bb1i6d

"a" Manufacturing marks.

(1) Camshaft.

Diameter A	24 (-0,02 ; -0,041) mm

B length	410,10 ± 0,25 mm

NOTE : No repair dimension

2 - 3 - Cam lift

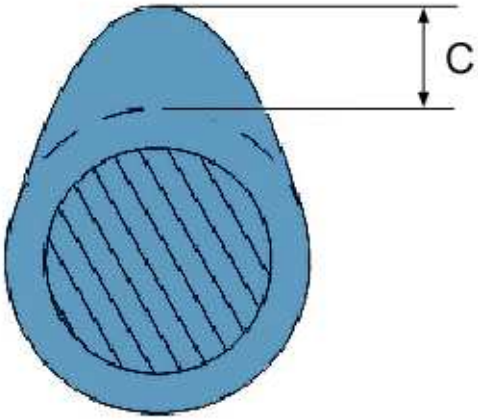

b1bb1i7d

Height "C" = Cam lift .

Cam lift - Cam openings	
Description	Cam lift "C"
Inlet cams	4,484 mm
Exhaust cams	4,487 mm

3 - VALVE SEATS AND GUIDES

NOTE : No repair dimension

3 - 1 - Machining in the cylinder head

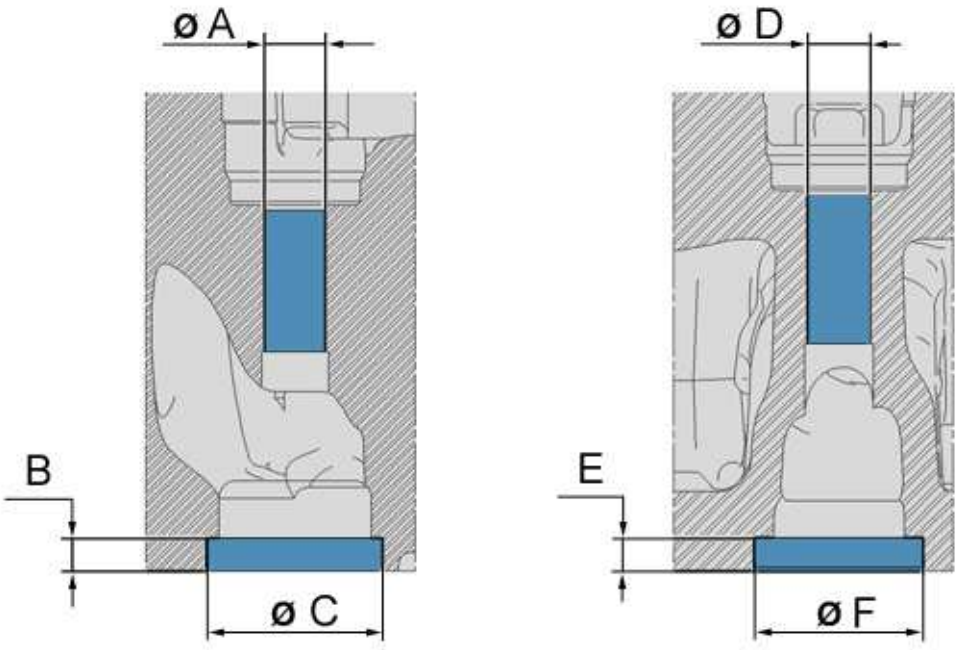

b1dp1pjd

Cylinder head machining dimensions for inlet valves.

	Nominal dimension	Repair size
Ø "A"	9,474 (+ 0,022 ; 0) mm	-
"B"	8,20 (+ 0,35 ; - 0,15) mm	-
Ø "C"	31,775 (+ 0,005 ; - 0,02) mm	-

Cylinder head machining dimensions for exhaust valves.

	Nominal dimension	Repair size
Ø "D"	9,474 (+ 0,022 ; 0) mm	-
"E"	8,20 (+0,15 ; -0,15) mm	-
Ø "F"	28,9 (+ 0,005 ; - 0,02) mm	-

3 - 2 - Location

Location - Valve guides.

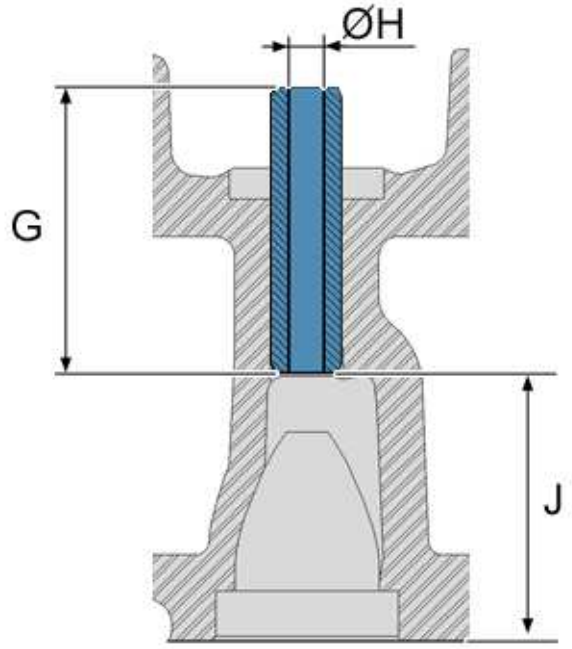

b1bb1i8d

-	Inlet valve	Exhaust valve
"G"	34 ± 0,25 mm	34 ± 0,25 mm
Ø "H"	5,5 (0 ; - 0,018) mm	5,5 (0 ; - 0,018) mm
Height : "J"	31,57 (+ 0,7 ; - 0,6) mm	31,57 (+ 0,7 ; - 0,6) mm

Location - Inlet valve seats.

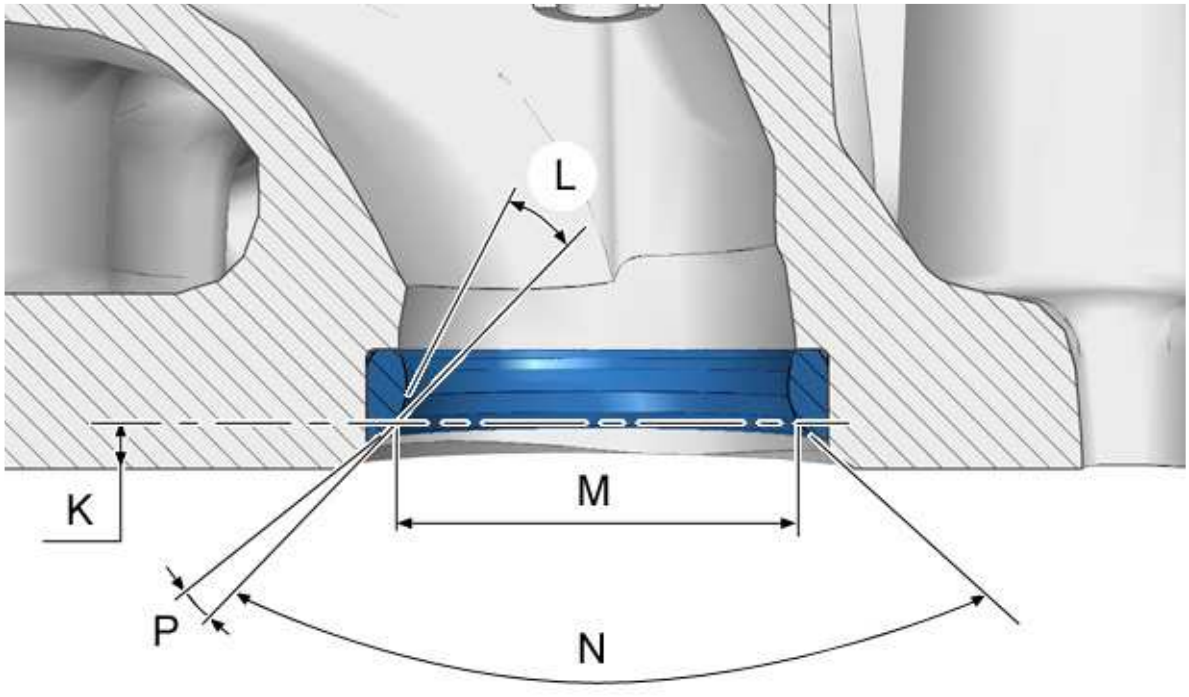

b1bb1iad

"K"	2,84 (+ 0,1 ; 0) mm
Angle "L"	23°
"M"	28,55 ± 0,05 mm
Angle "N"	90°
Angle "P"	15°

Location - Exhaust valve seats.

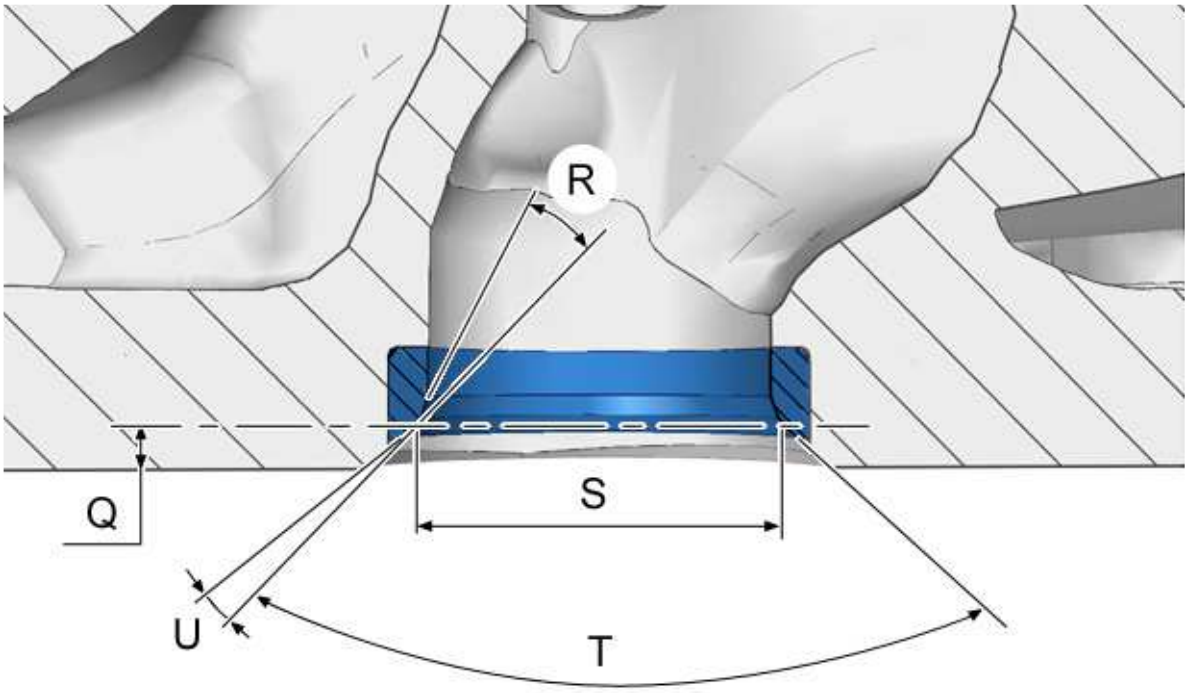

b1bb1ibd

"Q"	2,8 (+ 0,1 ; 0) mm
Angle "R"	26,3°
"S"	25,74 ± 0,05 mm
Angle "T"	90°
Angle "U"	15°

4 - VALVES AND VALVE SPRINGS

4 - 1 - valves

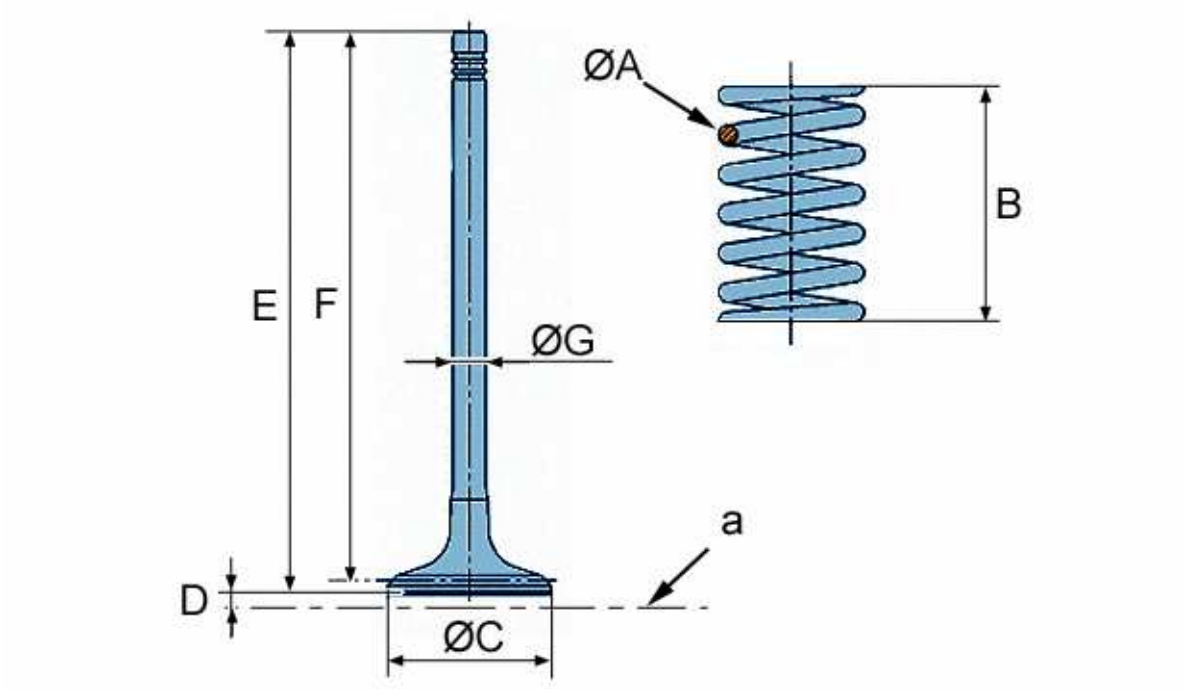

b1bb1icd

"a" Cylinder head face.

Characteristics of the valves		
Description	Inlet valve	Exhaust valve
Diameter "C"	30,15 ± 0,1 mm	27,51 ± 0,1 mm
Valve pocketing values "D"	0,6 mm	0,7 mm
"E" length	95,59 ± 0,25 mm	95,48 ± 0,25 mm
"F" length	93,34 ± 0,15 mm	93,38 ± 0,15 mm
Diameter "G"	5,485 (0 ; -0,015) mm	5,475 (0 ; -0,015) mm

NOTE : There are no specific repair valves available in Replacement Parts

4 - 2 - Valve springs

NOTE : The inlet and exhaust valve springs are identical

Description	Valve springs
Diameter of the wire "A"	5,485 (0 ; -0,015) mm
Free height "B"	50 mm

REFITTING : UNDER ENGINE

ESSENTIAL : Observe the safety and cleanliness recommendations

1 - TOOLING

Equipment :

- dial gauge
- dial gauge support
- Approved cleaning product
- Grease type MOLYCOTE RAPID
- Seal paste (Index "E10")
- Loctite (Type "LOCTITE 570")

Tool	Reference	Designation
[750-T]  *e5ab164t*	[750-T]	Clip for fitting the piston rings on the engine
[0194-L]  *e5ag064t*	[0194-L]	Crankshaft ring seal fitting drift : (Timing gear side)
[0194-M] 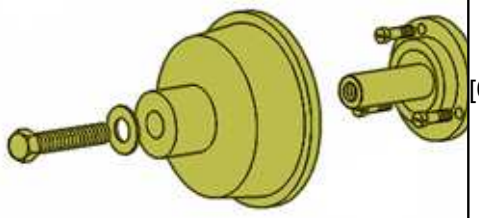	[0194-M]	Seal fitting mandrel : Crankshaft (Flywheel side)

e5ag065t		
[0194-P] 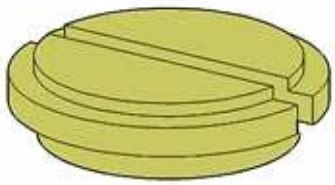 *e5ab163t*	[0194-P]	Conrod half shell centring tool (Thickness 2 + 3 mm)
[0194-QZ] 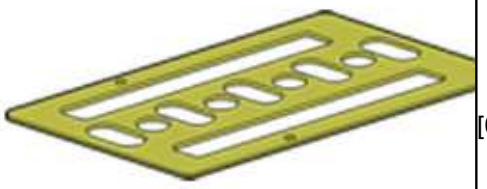 *e5ab165t*	[0194-QZ]	Crankshaft main bearing cap casing half shells positioning template
[0194-C]  *e5ab08st*	[0194-C]	flywheel stop
[0194-N] 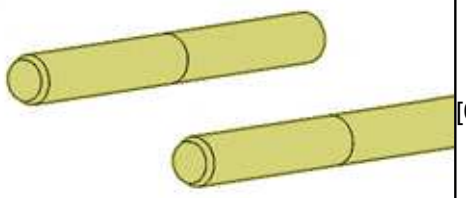 *e5ab08ut*	[0194-N]	Camshaft carrier assembly peg

[0194-W]  *e5ab0b7t*	[0194-W]	flywheel stop

2 - PRELIMINARY OPERATIONS

NOTE : Clean the parts and the joint faces before refitting any of them

WARNING : The parts must be clean and free from any trace of abnormal wear or impact

Check the condition of the following components (see corresponding procedure) :

- Cylinder block
- Crankshaft
- Conrods
- pistons

3 - REFITTING

WARNING : Adhere to the tightening torques

3 - 1 - Preparing the cylinder block

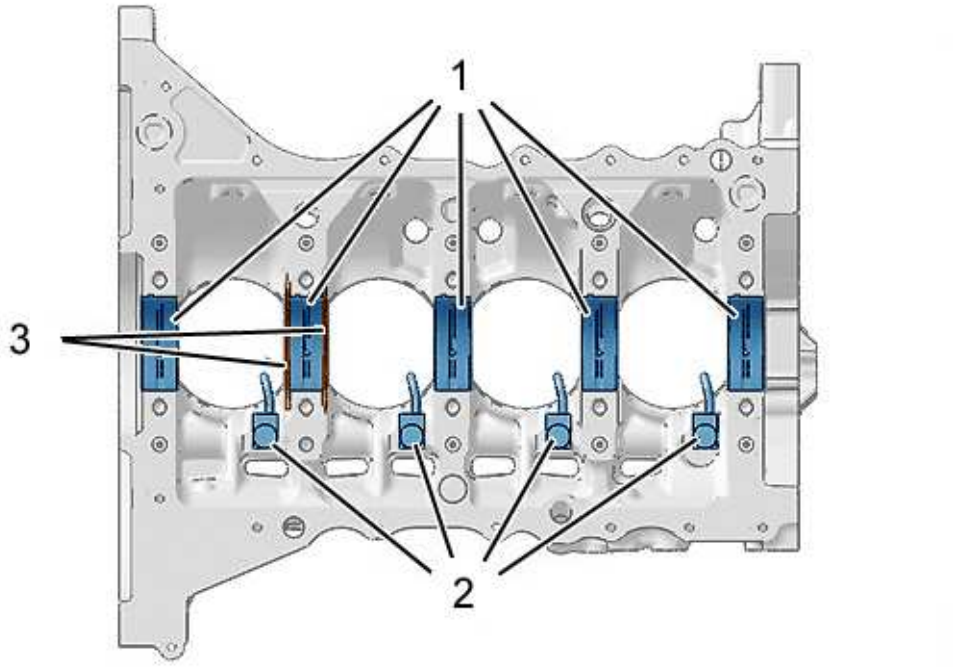

b1bg39cd

Refit :

- The grooved bearing shells (1)
- The crankshaft lateral clearance thrust washers (3) (lubrication grooves on the crankshaft side)
- The piston base jets (2)

NOTE : For checking, rectification or replacement of these parts, refer to the data sections

3 - 2 - Adjusting the crankshaft endfloat

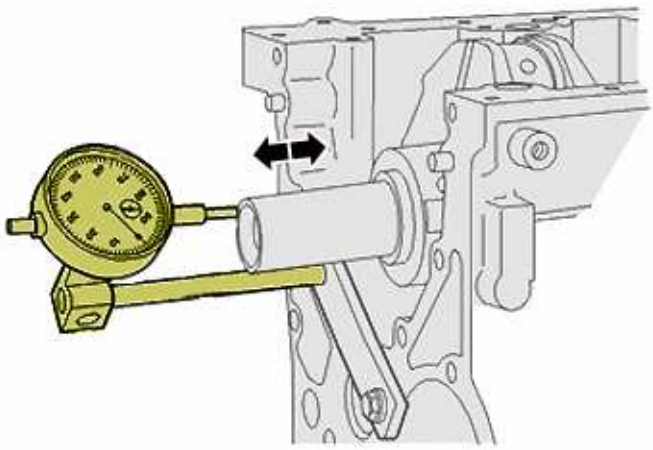

b1bg31td

Fit the crankshaft .

Position :

- The dial gauge support
- The dial gauge

Push the crankshaft back and forth in the cylinder block.

Set the dial gauge to zero.

Push the crankshaft back and forth, on the opposite side, in the cylinder block.

There should be a 0,07 to 0,322 mm endfloat.

> **WARNING :** **Select upper and lower adjusting shims of the same thickness for the same face of the crankshaft**

Oil :

- The crankshaft bearing faces
- The half bearing shells

> **WARNING :** Do not apply oil to the cylinder block/crankshaft main bearing cap casing contact area

Remove the crankshaft.

3 - 3 - Connecting rod/piston assemblies

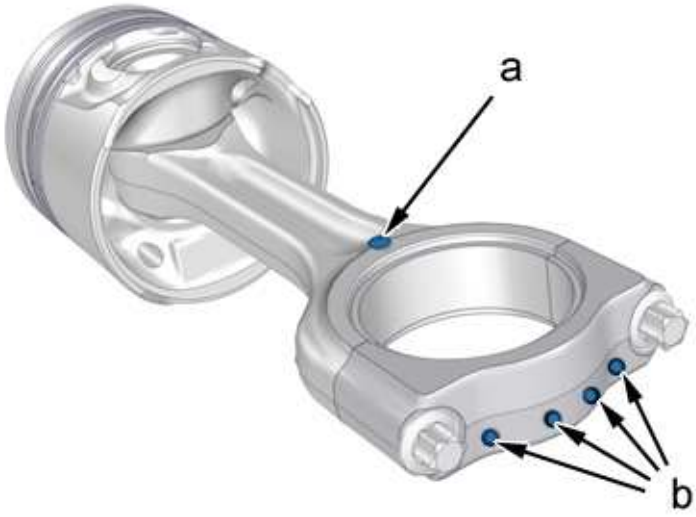

b1bg39dd

WARNING : Note the position and the matching of the conrod caps and conrods

Mark the position of the piston / conrod assemblies in relation to the corresponding cylinders :

- Identify with the colour mark "b" : On big end cap (clutch side)
- Mark the direction of fitting of the connecting rod : The boss "a" is oriented to the timing end

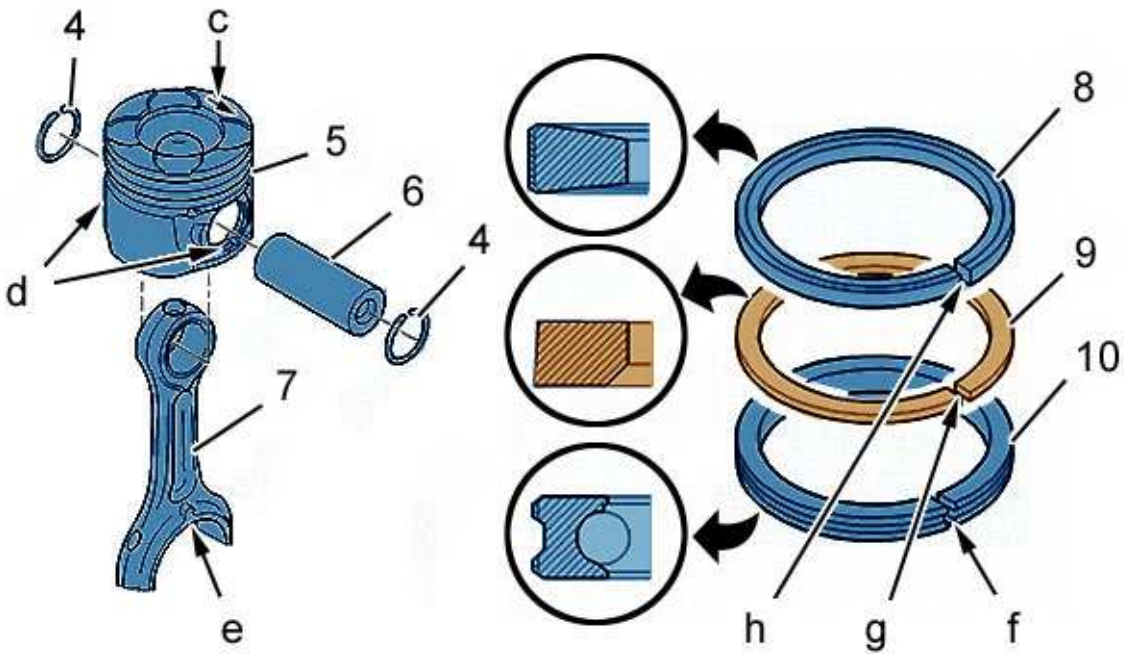

b1bg39ed

"c" Engraving "DIST".

"d" Spring retaining slots.

"e" Boss.

"f" Ring gap.

"g" Ring gap.

"h" Ring gap.

> **WARNING :** Mark the orientation of the conrod in relation to the piston

> **WARNING :** Mark the direction of fitting of the pistons, the arrow (at "c") oriented to the timing end

> **NOTE :** The piston shafts are free-fitted in the little ends and the pistons, then laterally immobilised by means of two stop rings

Check the condition of the following components :

- The conrods (7)
- The pistons (5)
- The piston shafts (6)

Refit the piston rings (8), (9) and (10).

> **NOTE :** The piston ring surfaces marked "TOP" must face upwards

Oil the piston shafts (6).

> **WARNING :** Observe the direction of the conrod in relation to the piston

Refit :

- The connecting rod (7)
- The piston (5)
- The shaft (6)
- The gudgeon pin retaining rings (4)

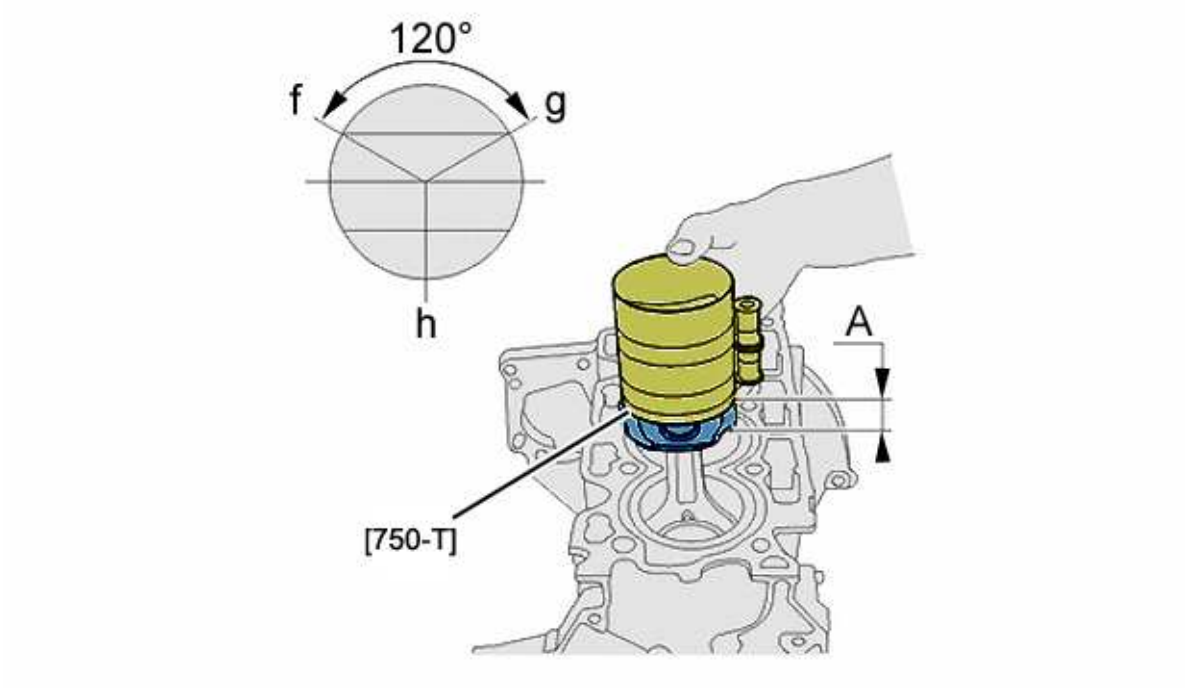

b1bg39fd

WARNING : Observe matching of the conrods/cylinders

WARNING : Direct the marking "DIST" engraved on the piston to the exhaust camshaft side and direct the arrow to the timing belt side

Check that the piston ring gaps "f", "g", "h" are facing in the right direction.

Fit the tool [750-T].

NOTE : Let the lower section "A" of the piston protrude to allow it to be correctly guided

Oil :

- The pistons
- The cylinders
- The conrod bearing shells

Refit the connecting rod/piston assemblies.

Remove the tool [750-T].

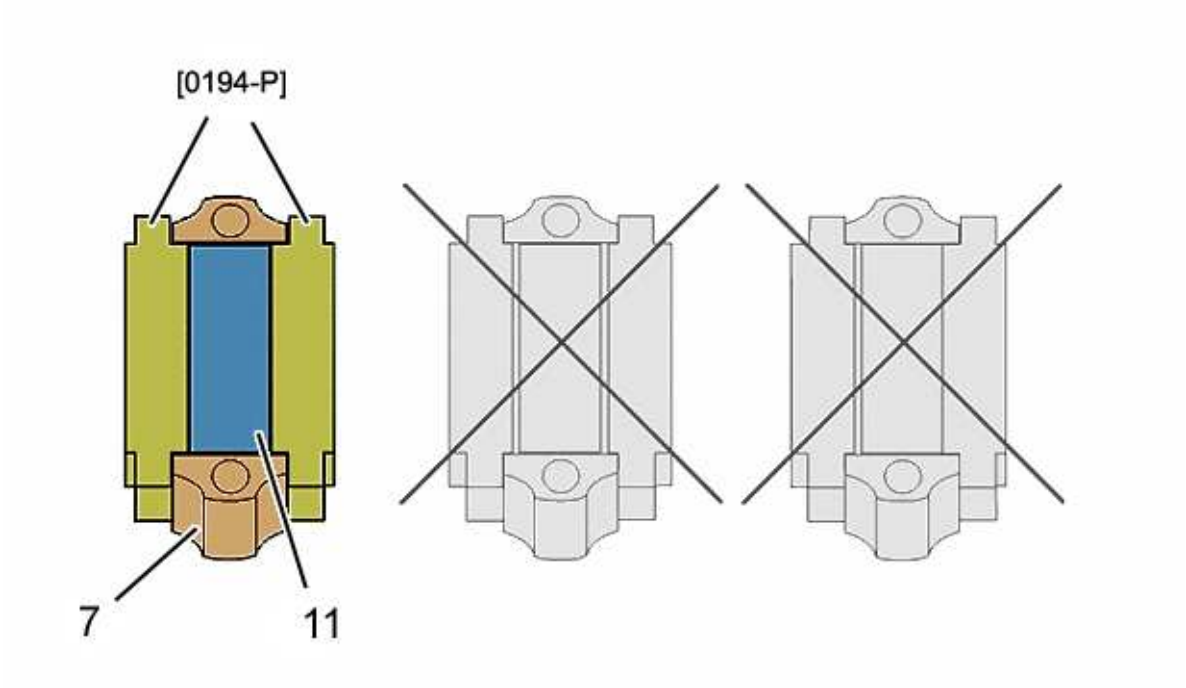

b1bg39gd

WARNING : Use the adapted surfaces of the tools [0194-P]

Fit the half bearing shells (11) on the connecting rods (7) ; Using the tools [0194-P].

Remove the tools [0194-P].

NOTE : Take care with the positioning of the connecting rod bearing shells (11)

Oil the upper bearing shells positioned on the connecting rods (7).

Fit the crankshaft .

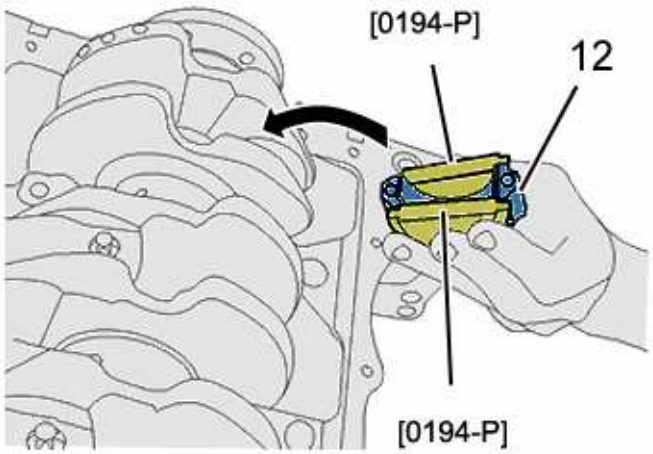

b1bg39hd

WARNING : Observe pairing of the conrods/big end caps

WARNING : Keep to the direction of fitting of the conrod caps (6) (do not damage the connecting rods)

Fit the half bearing shells on the big end caps ; Using the tools [0194-P].

Remove the tools [0194-P].

Oil the half-bearing shells.

Lubricate the crankshaft crank pins lightly.

Refit the big end caps (12) onto their respective conrods.

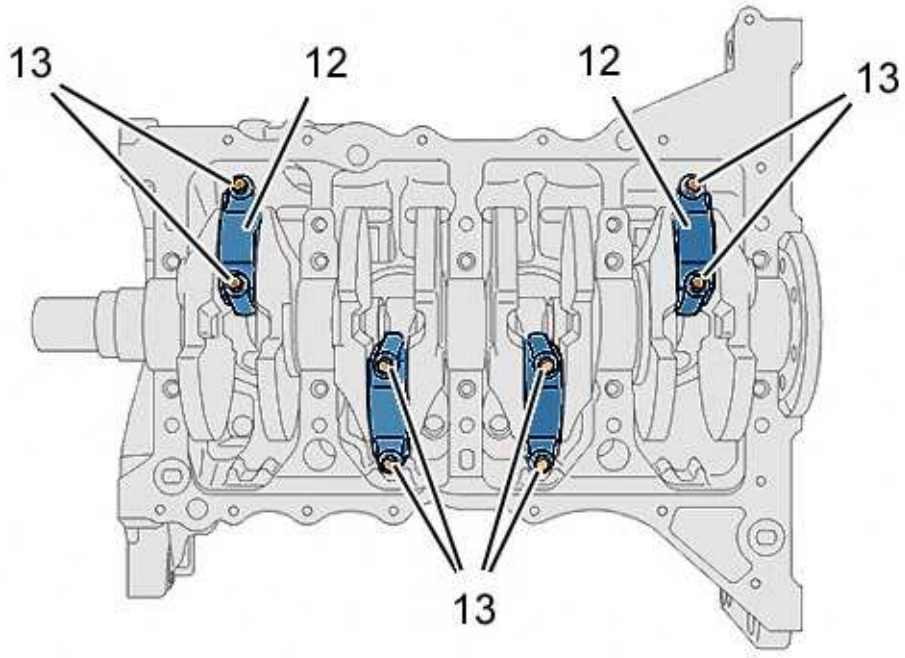

b1bg39id

Fit the bolts (13) (new).

Tighten the fixing bolts (13) to the correct torque.

3 - 4 - Crankshaft main bearing cap casing

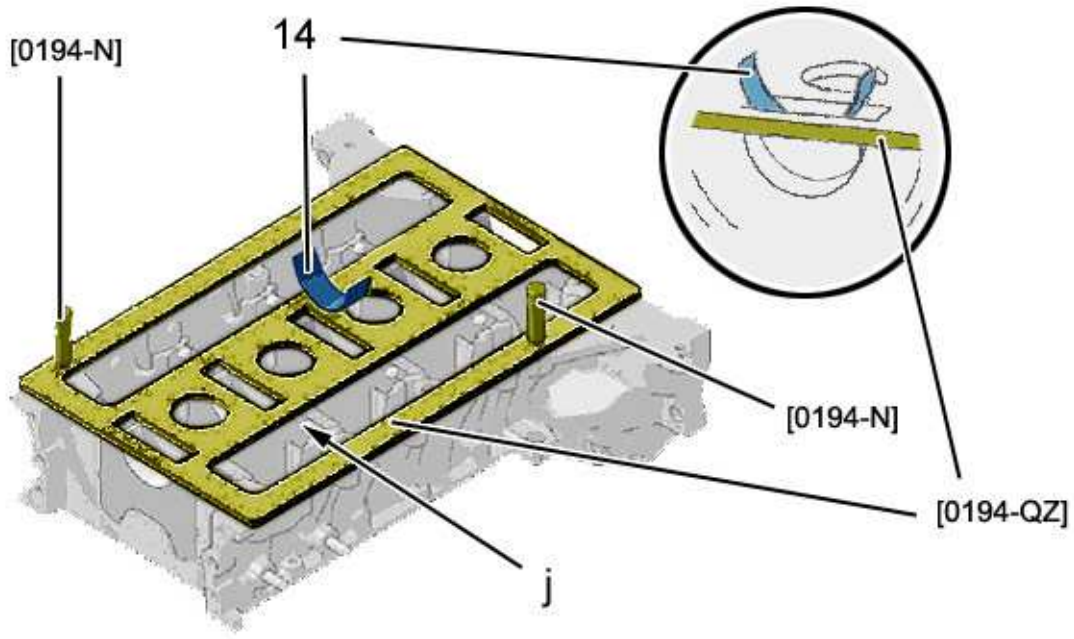

b1bg39jd

Position the tools [0194-QZ] and [0194-N] on the crankshaft main bearing cap casing.

Refit the smooth lower bearing shells (14).

Remove tools [0194-QZ] and [0194-N].

Check that the 10 centring pins are present on all the bearings (at "j").

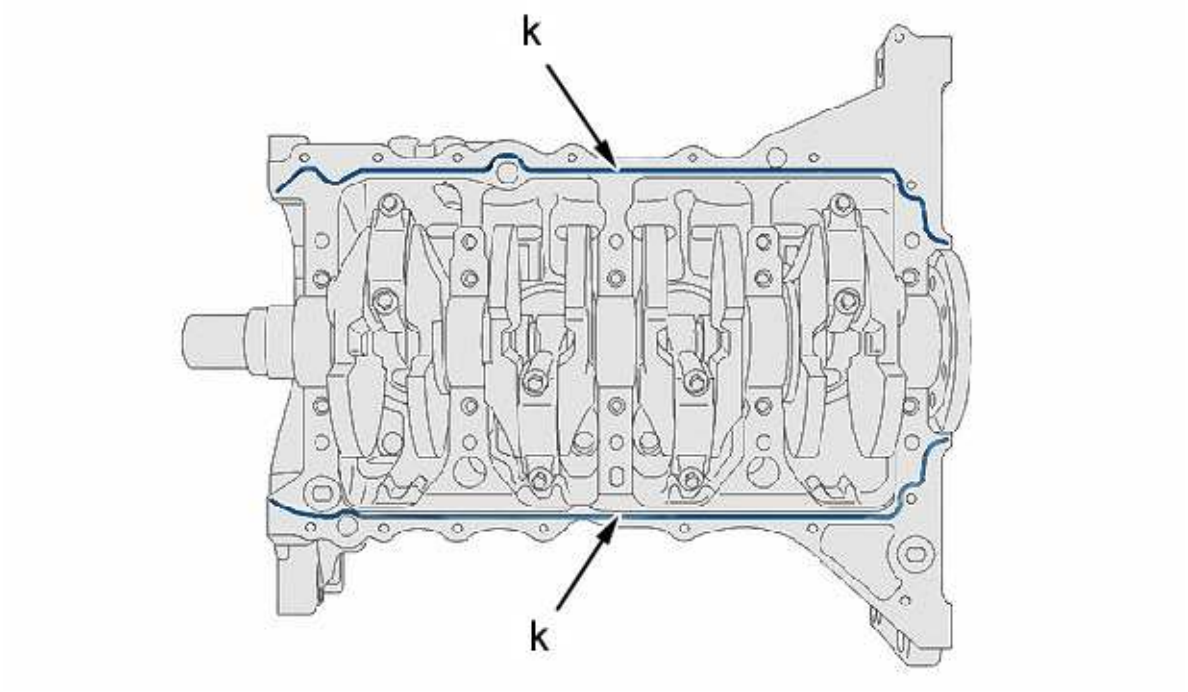

b1bg39kd

Apply a bead of "E10" sealant to the edge of the cylinder block (at "k").

Fit the crankshaft main bearing cap casing on the cylinder block.

WARNING : The positioning operation must not take longer than 5 minutes (sealing)

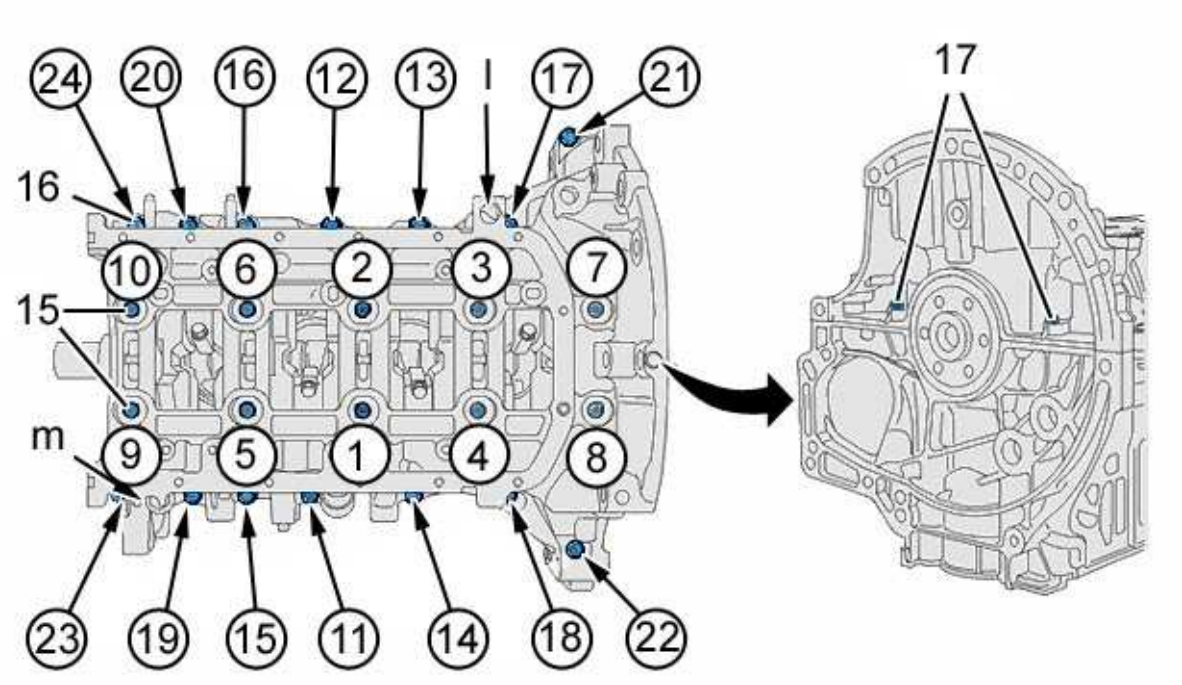

b1bg39ld

NOTE : It is essential to replace the bolts (15), (16), (17)

Refit the tools [0194-N] (as "I", "m").

WARNING : The positioning operation must not take longer than 5 minutes

Apply thread lock on the threads of the 10 bolts (15).

Pre-tighten the bolts (15), (16), (17) by hand.

Remove the tools [0194-N].

Tighten the fixing bolts (15), (16), (17) to the correct torque.

3 - 5 - oil pump

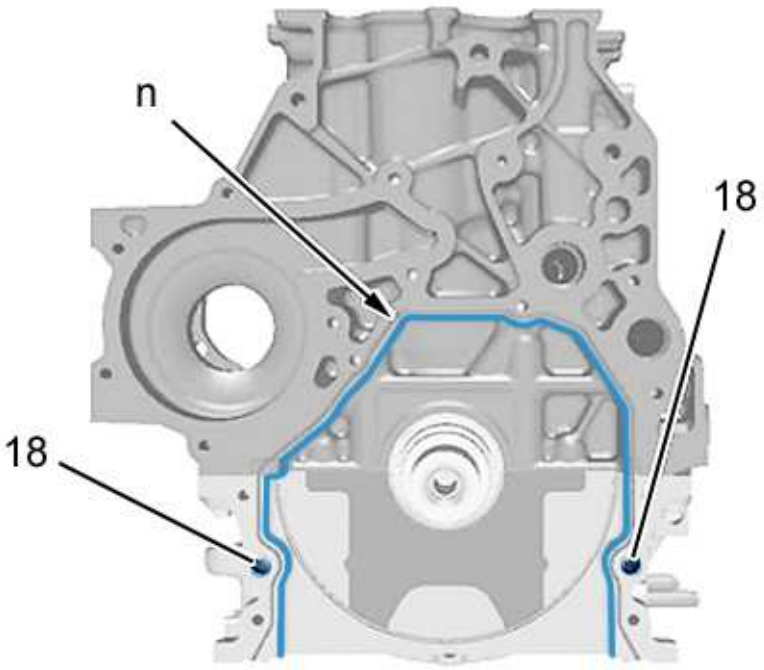

b1bg39md

Apply a bead of "E10" sealant to the edge of the cylinder block (at "n").

WARNING : The positioning operation must not take longer than 5 minutes (sealing)

Fit the centralising pins (18).

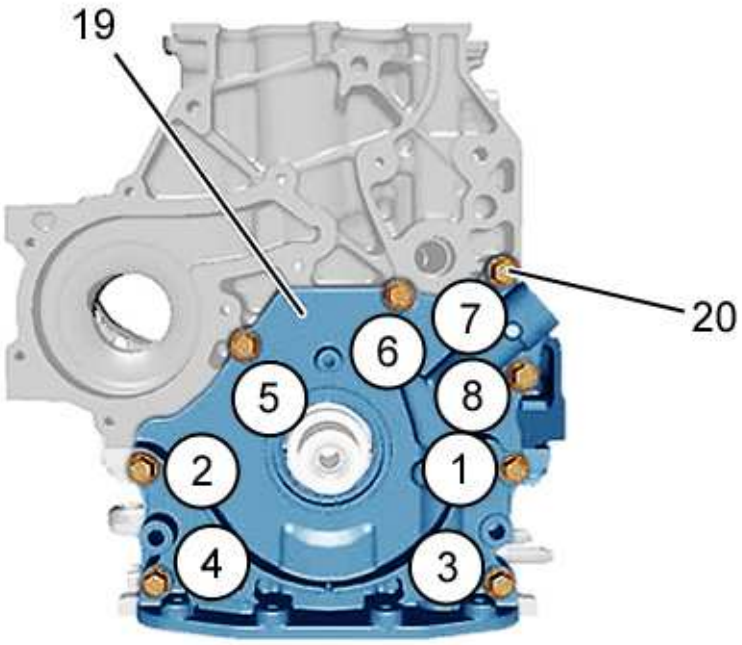

b1bg39nd

Lubricate the interior of the oil pump with clean engine oil.

Refit :

- The oil pump (19)
- The bolts (20)

Tighten the fixing bolts (20) to the correct torque.

3 - 6 - Oil suction strainer - Lower cover

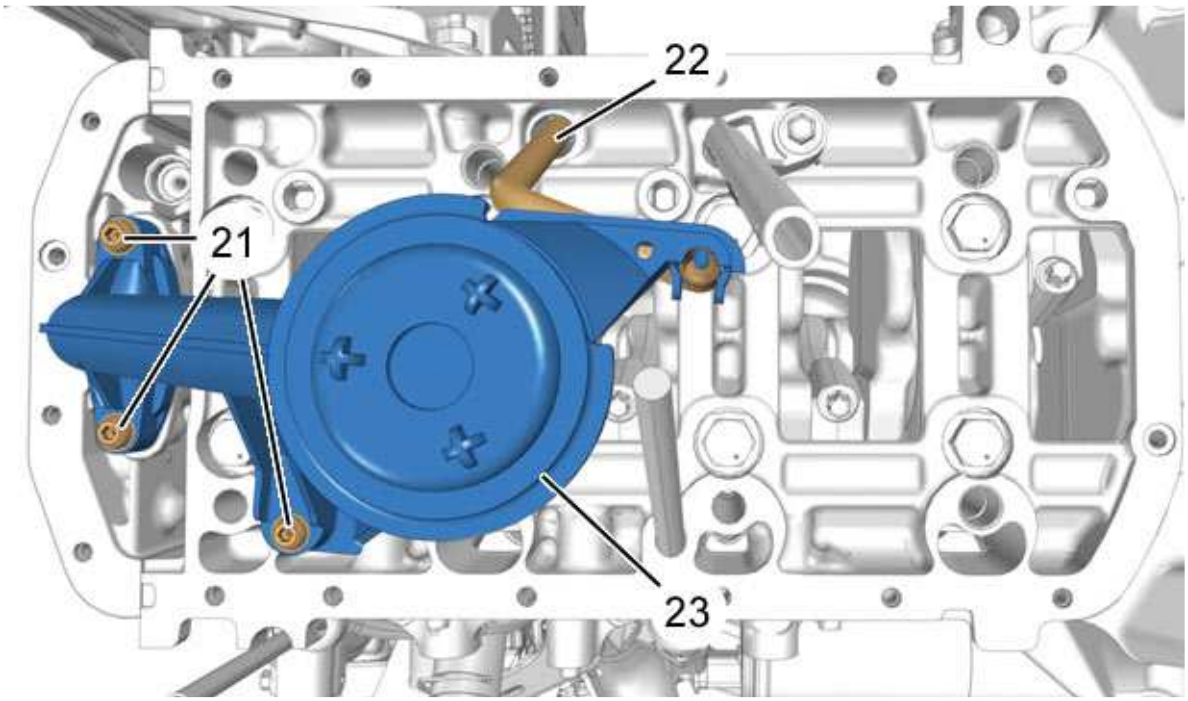

b1bg39od

Refit :

- The oil suction strainer (23)
- The bolts (21)
- The lower gauge guide (22)

3 - 7 - Oil sump (all engines except DV6U)

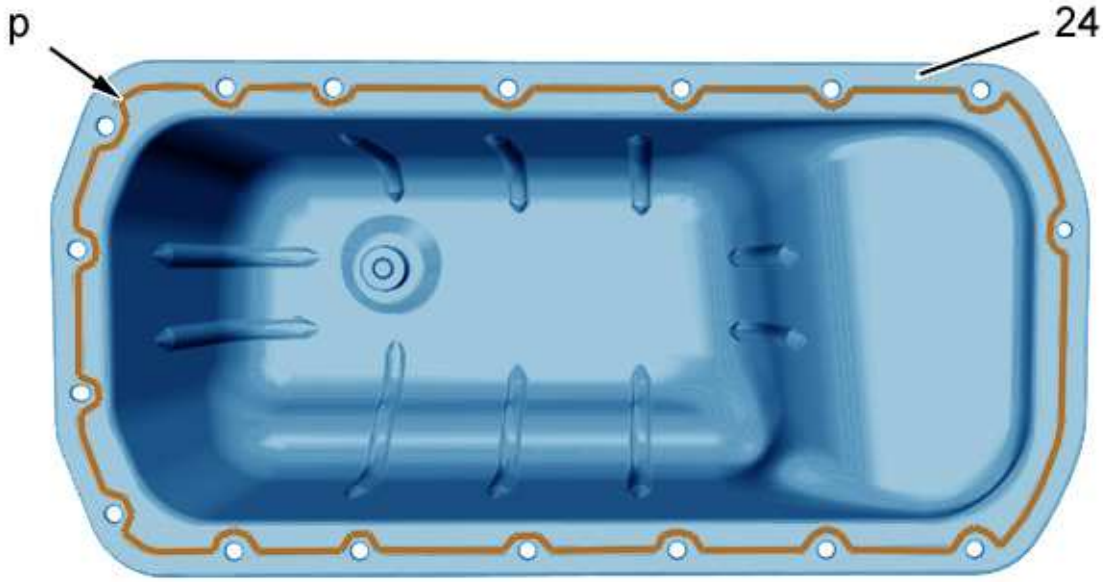

b1bg39pd

(24) Oil sump.

Apply a strip of sealing paste "E10" (at "p").

WARNING : The positioning operation must not take longer than 5 minutes (sealing)

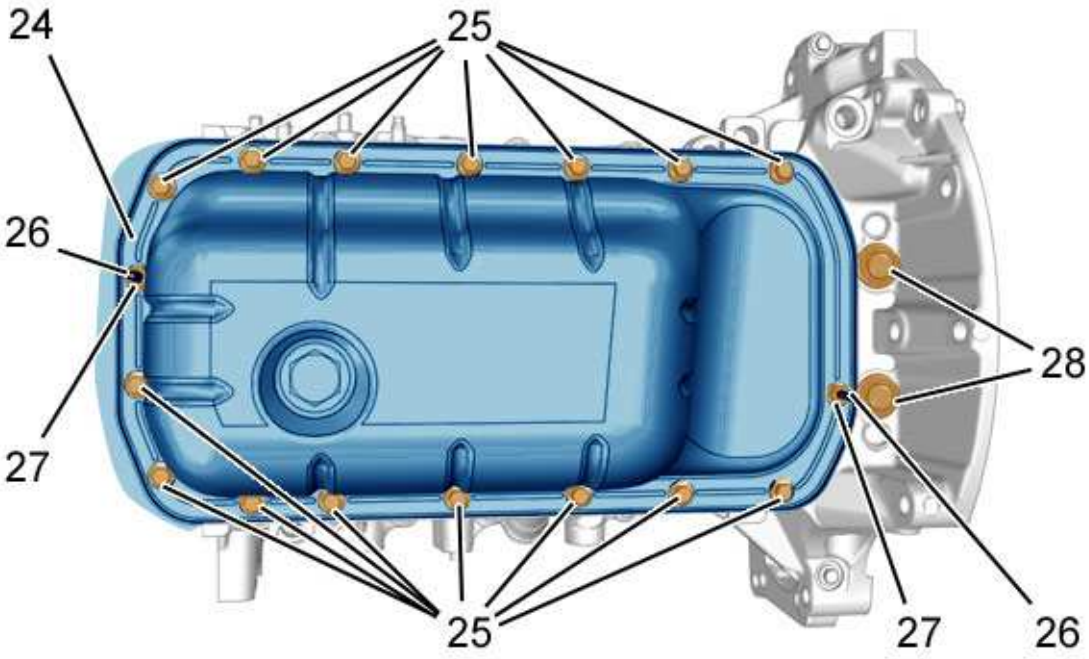

b1bg39qd

Refit :

- The 2 studs (26)
- The oil sump (24)
- The 2 nuts (27)
- The bolts (25)

Immerse the 2 caps (28) in a bath of sealing product for 4 minutes minimum.

Fit the bolts (28) until they are in contact with the base of the spot facing.

3 - 8 - Oil sump (engine DV6U)

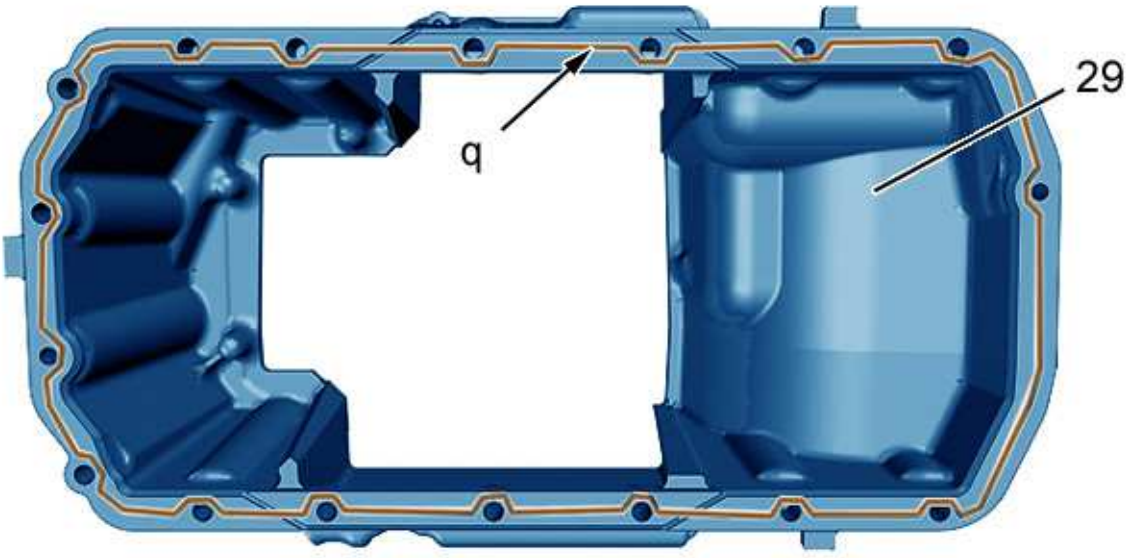

b1bg39rd

(29) Lower cylinder block.

Apply a strip of sealing paste "E10" (at "q").

> **WARNING :** The positioning operation must not take longer than 5 minutes (sealing)

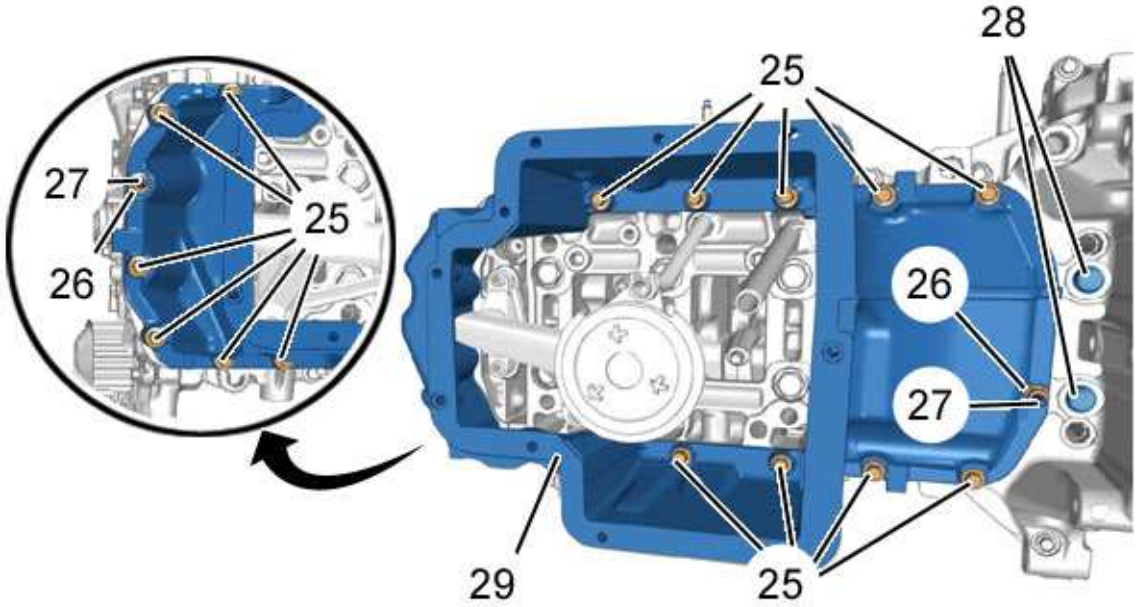

b1bg39sd

Refit :

- The lower cylinder block (29)
- The bolts (25)
- The 2 studs (27)
- The 2 nuts (26)

Immerse the 2 caps (28) in a bath of sealing product for 4 minutes minimum.

Fit the bolts (28) until they are in contact with the base of the spot facing.

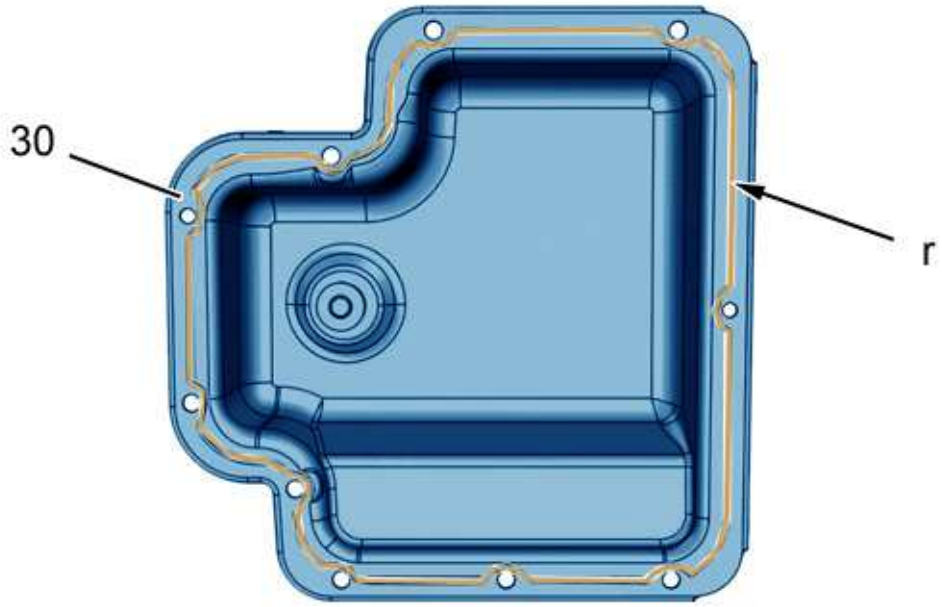

b1bg39td

(30) Oil sump.

Apply a strip of sealing paste "E10" (at "r").

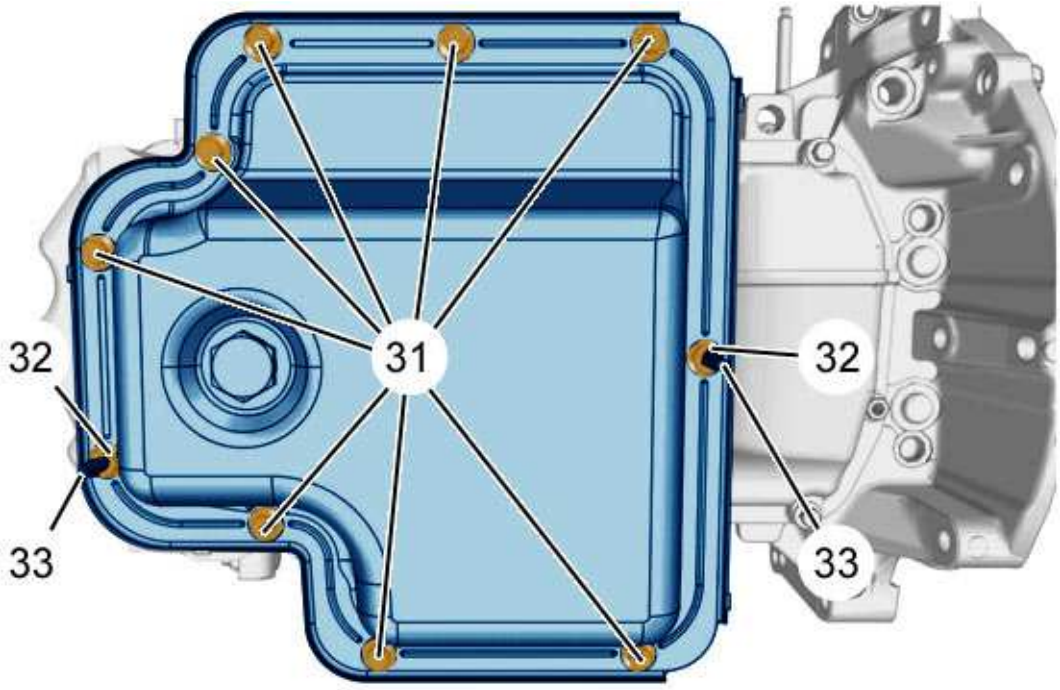

b1bg39ud

Refit the 2 studs (33).

Tighten the studs (33).

Refit :

- The oil sump (30) (Of steel)
- The 2 nuts (32)
- The 8 securing bolts (31)

3 - 9 - Ring seals (crankshaft)

WARNING : Do not lubricate the exterior of the sealing ring

WARNING : Check the condition of the lip of the ring seal on its support

WARNING : Check the absence of any mark on the bearings of the sealing ring

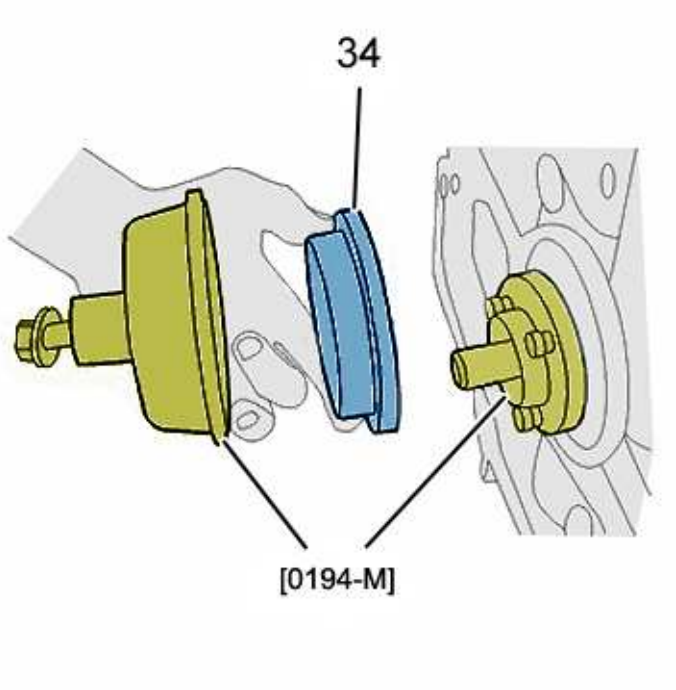

b1bg39vd

Fit tool [0194-M] on the crankshaft (flywheel side).

Refit the ring seal (34) ; Using tool [0194-M] (hold for 5 seconds).

Remove the tool [0194-M].

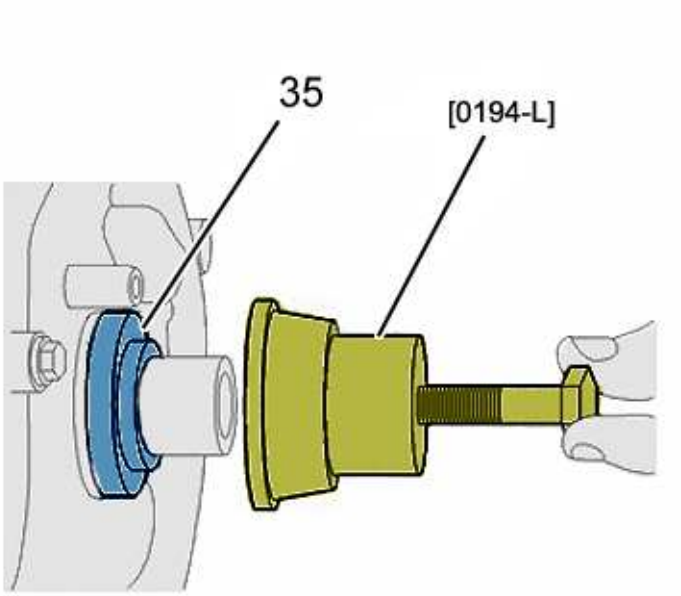

b1bg39wd

Fit tool [0194-L] on the crankshaft (oil pump side).

Refit the ring seal (35) ; Using tool [0194-L] (hold for 5 seconds).

Remove the tool [0194-L].

3 - 10 - Piston protrusion

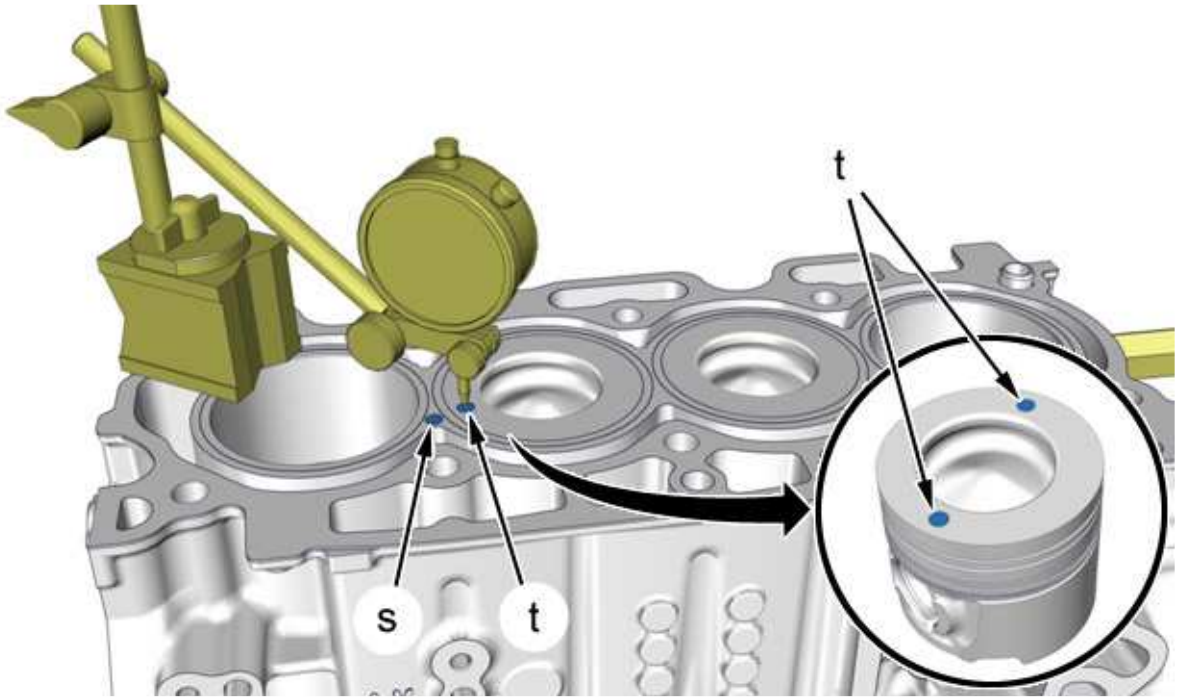

b1bg39xd

Clean the surfaces to be checked.

> **NOTE :** Check the protrusion of the pistons in relation to the cylinder head seal surface ((2 check points "t"))

Place the dial gauge bracket on the cylinder block .

Fix the dial gauge on the bracket .

Set the dial gauge to zero (at "s").

Measure the height difference (at "t").

Calculate the average of the 2 values measured.

> **NOTE :** Maximum gap between two consecutive cylinders = 0,10 mm Select the thickness of the cylinder head gasket in relation to the protrusion of the pistons. Use the highest piston as a reference

3 - 11 - Oil filter support

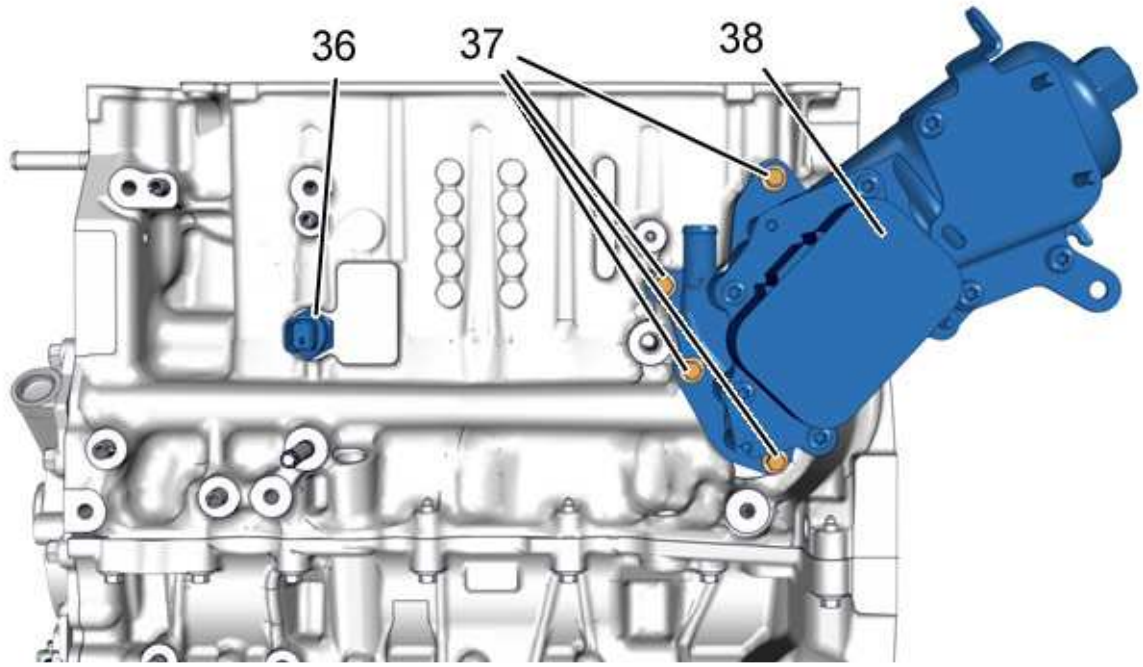

b1bg39yd

> **WARNING :** Take care with the positioning of the seal in its location

Refit :

- The oil filter bracket (38) fitted with a new seal
- The 4 bolts (37)
- The engine oil pressure switch seal (36)

- The engine oil pressure switch (36)

3 - 12 - Crankshaft gear

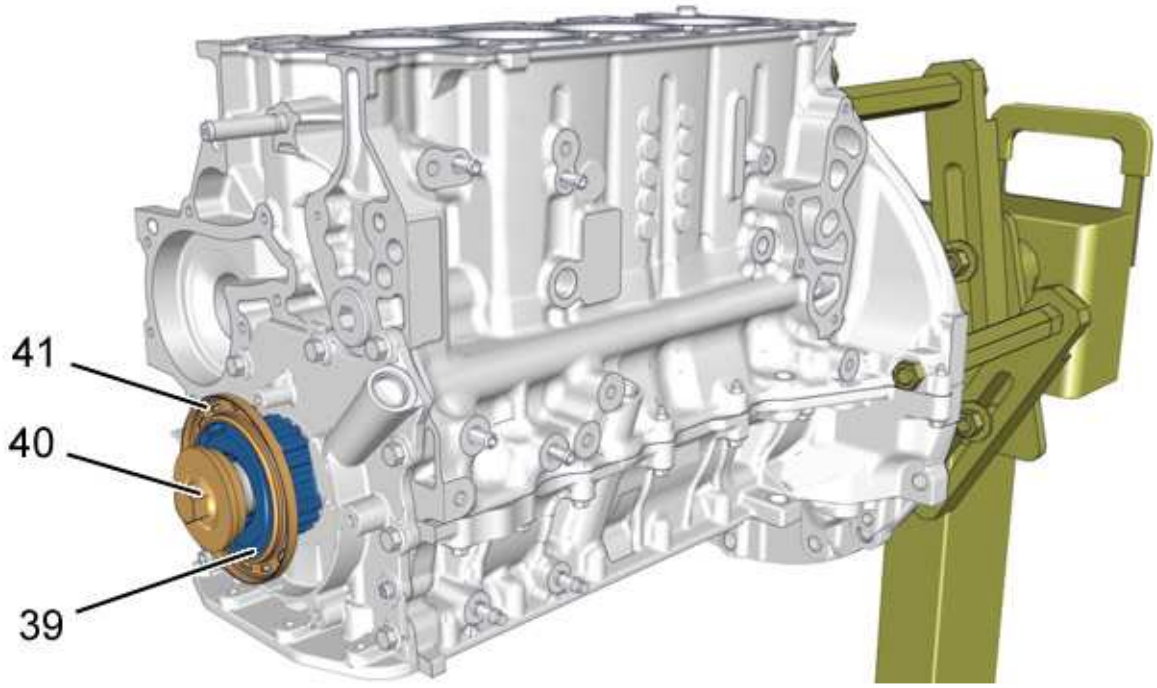

b1bg39zd

WARNING : Take care not to distort the target (41) when refitting the crankshaft sprocket (39)

Refit :

- The keyway of the crankshaft timing pinion
- The crankshaft gear (39) (Carefully)
- The (40) bolt

3 - 13 - Engine flywheel / Double damped flywheel (according to equipment)

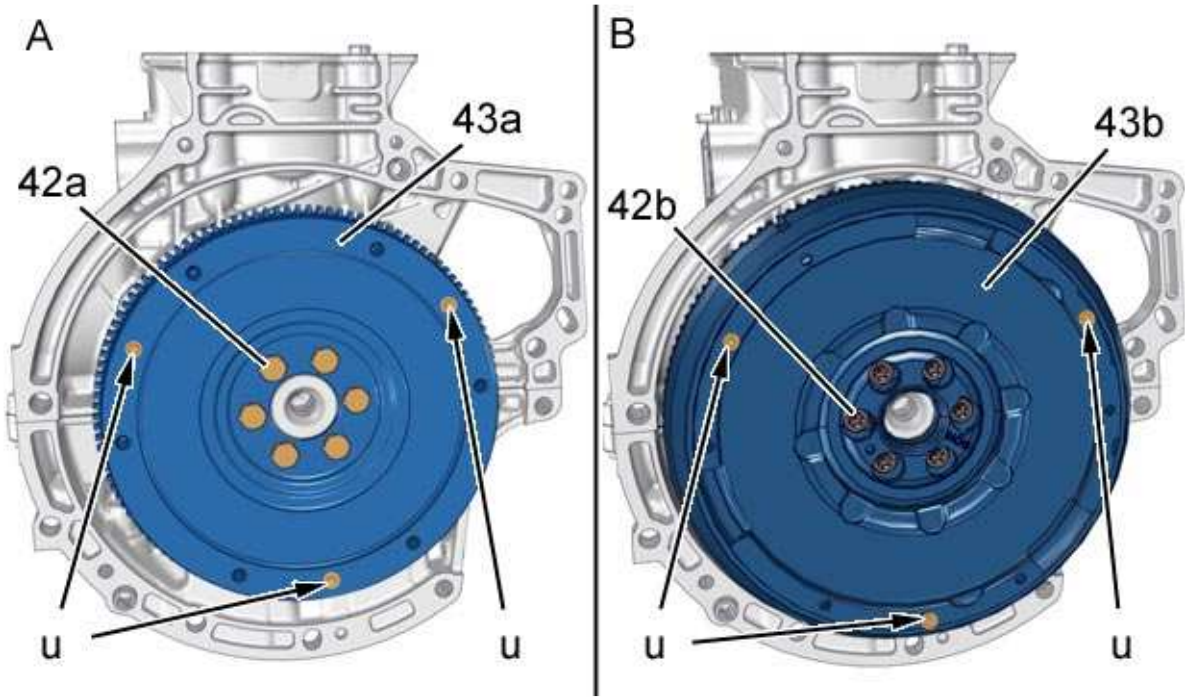

b1bg3a0d

"A" Single flywheel.

"B" Double damped engine flywheel.

> **WARNING :** Use new screws (42)

Refit :

- The flywheel (43)
- The 6 bolts (42) (new)

> **WARNING :** Check the presence of the centring pins for the clutch mechanism (at "u")

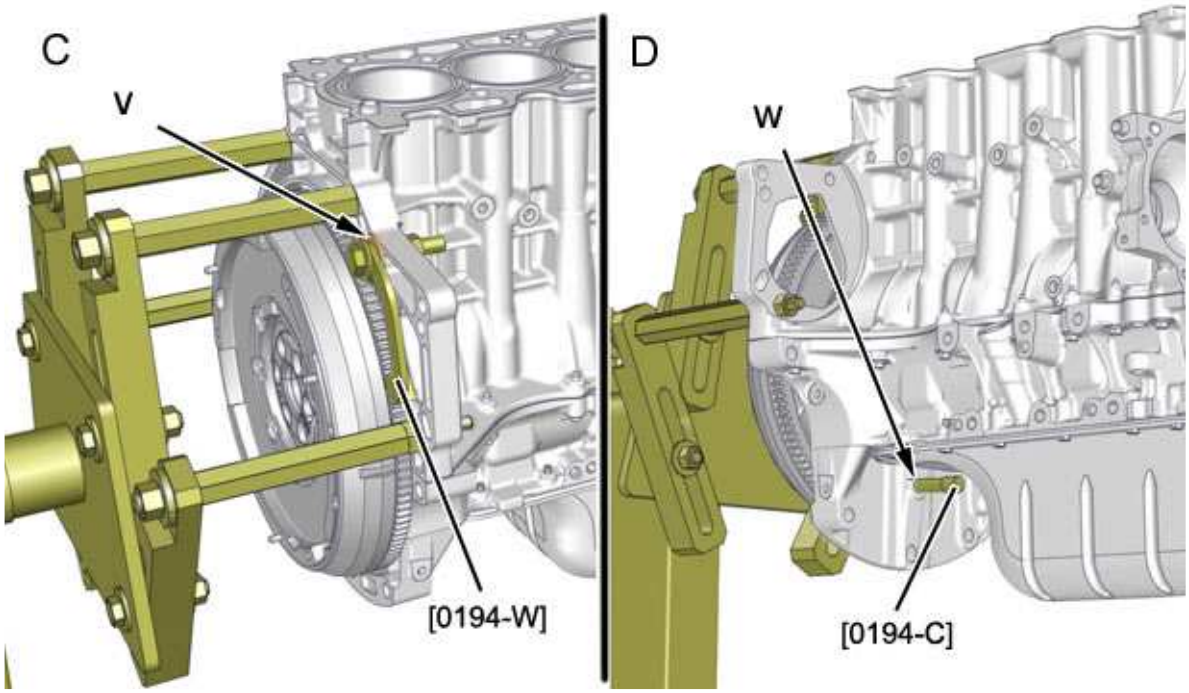

b1bg3a1d

"C" First possibility : DV engines all types.

"D" Second possibility : DV engines all types (Not DV6U).

> **WARNING :** Turn the crankshaft pulley to drive the engine in its normal direction of rotation (clockwise)

First possibility : (all engine types) :

- Position a spacer of 8 mm between the tool [0194-W] and the engine casing (at "v")
- Fit the tool [0194-W] ; Using a bolt and a nut

Second possibility : (all engines except DV6U) :

- Turn the crankshaft pulley to drive the engine in its normal direction of rotation (clockwise)
- Peg the engine flywheel ; Using tool [0194-C] (at "w")

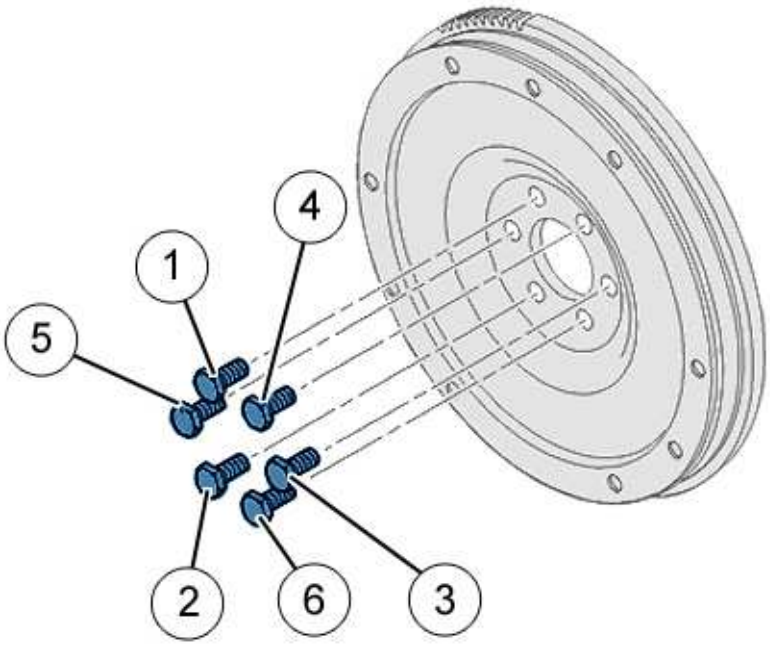

b1cp0mmd

WARNING : Proceed bolt by bolt in the order shown (order from 1 to 6)

Tighten the 6 bolts (42) to the specified torque.

3 - 14 - Coolant pump - Coolant inlet manifold

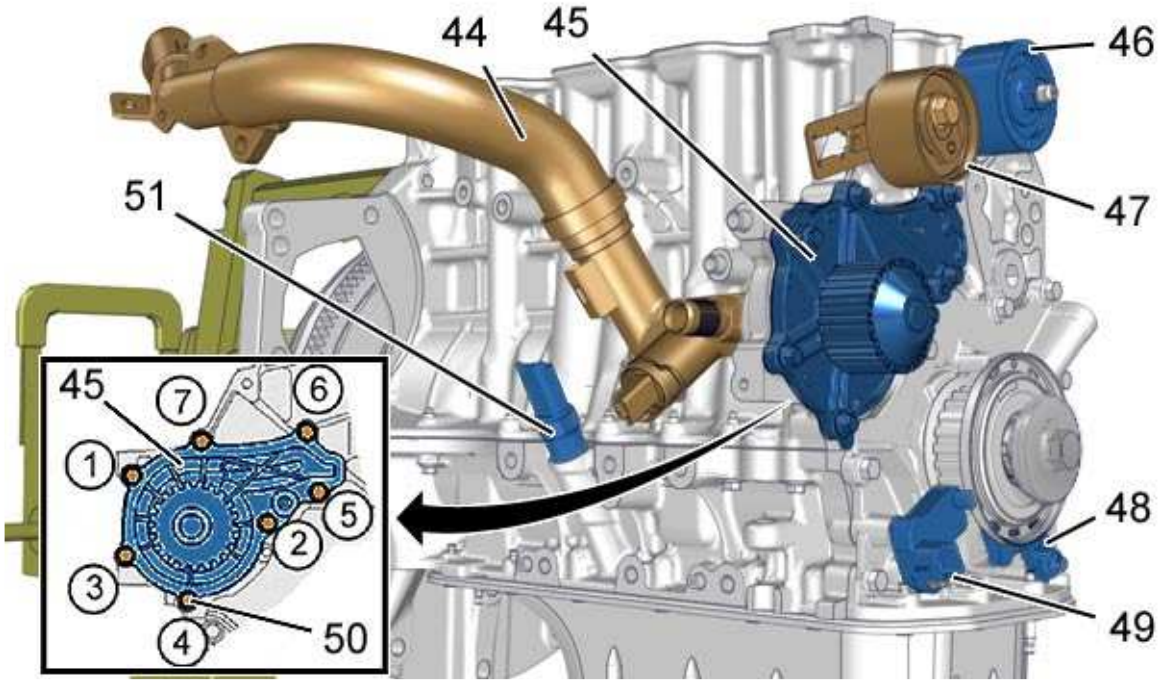

b1bg3a2d

WARNING : Take care to position the coolant pump (46) seal in its location

Refit :

- The dipstick cap (according to equipment)
- The oil level and temperature sensor (51) fitted with a new seal (according to equipment)
- The offset prevention angle bracket (48)
- The engine speed sensor (49)
- The guide roller of the timing belt (46)
- The timing roller tensioner (47)
- The coolant manifold (44)
- The coolant pump (45) complete with a new seal
- The bolts (50)

WARNING : Proceed bolt by bolt in the order shown (order from 1 to 7)

Tighten the fixing bolts (50) to the correct torque.

REFITTING : ENGINE TOP

ESSENTIAL : Observe the safety and cleanliness recommendations

1 - TOOLING

Equipment :

- Valve spring compressor (Type FACOM U.43 LA)
- Cup thrust pad (Type FACOM SP 18380)
- dial gauge
- dial gauge support
- Approved cleaning product
- Grease type MOLYCOTE RAPID
- Seal paste (Index "E10")
- Thread locking paste (Type "LOCTITE 570")

Tool	Reference	Designation
[0132-AA] 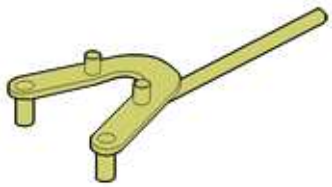 *e5ab0ddt*	[0132-AA]	toothed belt pinion locking tool
[0132-W] 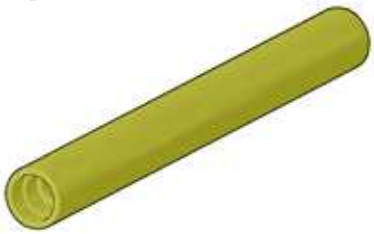 *e5amxymt*	[0132-W]	Tool for fitting valve stem seals
	[0185]	Cylinder head bolt socket

[0185] 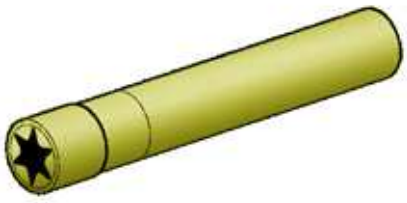 *e5ag07dt*		
[1603] [4220-T] 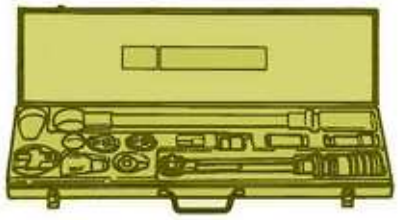 *e5ag06tt*	[1603] I[4220-T]	Tightening kit HD
[1608-C]  *e5ab0cbt*	[1608-C]	Adaptor for tightening diesel injector
[1 860 765 000] 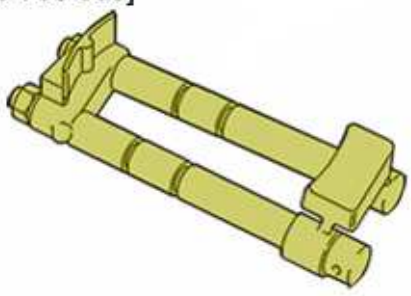 *e5ab0b4t*	[1 860 765 000] (kit [0191])	tool for immobilising the toothed belt pulley

[0194-A]  *e5ab08qt*	[0194-A]	crankshaft setting rod
[0194-B]  *e5ab08rt*	[0194-B]	Camshaft probe
[0194-C]  *e5ab08st*	[0194-C]	flywheel stop
[0194-A]  *e5ab08qt*	[0194-A]	High pressure fuel pump drive pulley immobilising rod

[0194-K] 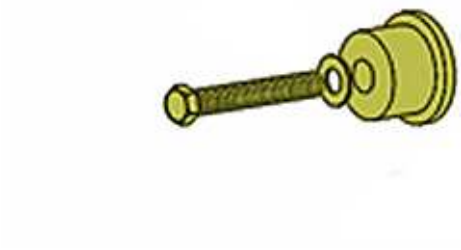 *e5ag063t*	[0194-K]	Seal fitting mandrel : Camshaft
[0194-N] 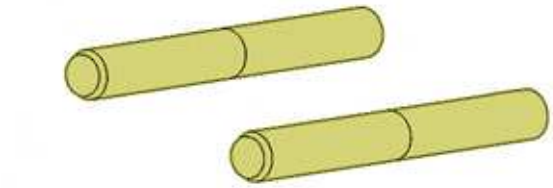 *e5ab08ut*	[0194-N]	Camshaft carrier positioning tool
[0194-T]  *e5ab05lt*	[0194-T]	plugs kit

2 - PRELIMINARY OPERATIONS

ESSENTIAL : Respect the safety and cleanliness recommendations that are specific to high pressure diesel injection (HDi) engines

NOTE : Clean the parts and the joint faces before refitting any of them

WARNING : The parts must be clean and free from any trace of abnormal wear or impact

Check the condition of the following components (see corresponding procedure) :

- Cylinder block

- Crankshaft
- Conrods
- Pistons

3 - PRECAUTIONS TO BE TAKEN BEFORE RE-ASSEMBLY

> **WARNING :** Take note of the points listed below

Before refitting :

- Each component must be checked and then cleaned before being refitted
- Clean the gasket faces with an approved descaling product ; Do not use abrasives or sharp tools on the joint faces ; The gasket faces must not have any traces of knocks or scores
- Clean the bolt threads and taps before refitting
- Always replace all the seals

4 - REFITTING

> **WARNING :** Adhere to the tightening torques

4 - 1 - Refitting : valves

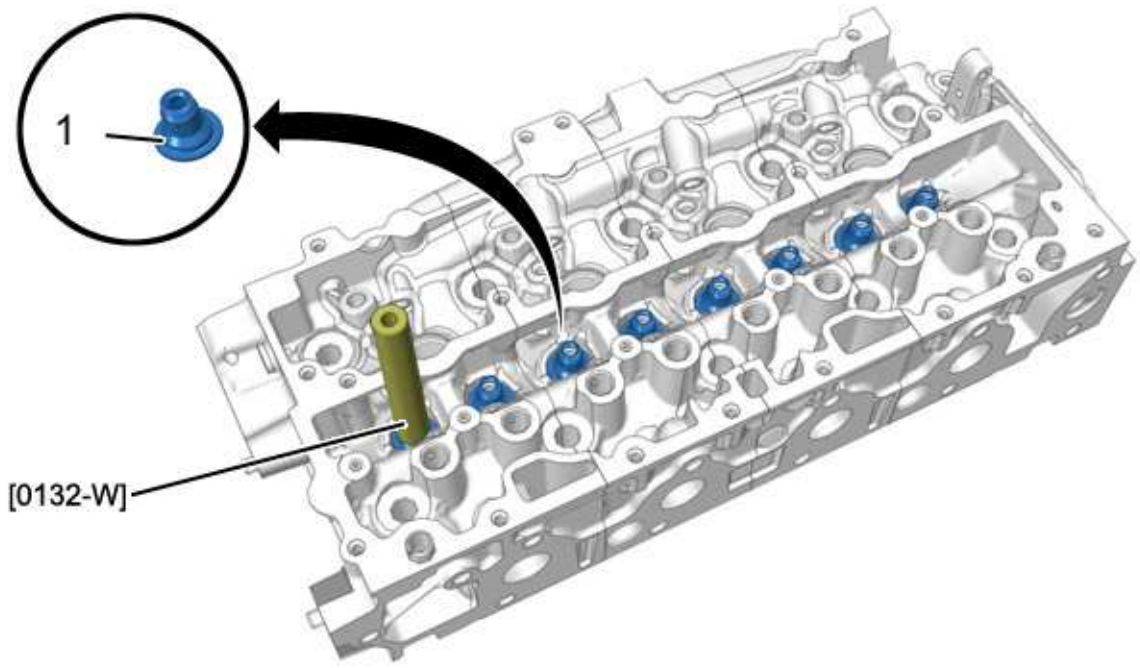

b1bg3eid

Refit the valve stem seals (1) ; Using tool [0132-W].

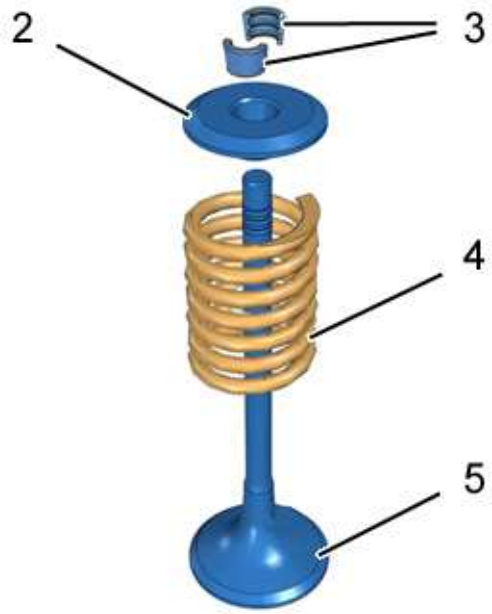

b1bg3ejd

(2) Inlet upper cup - Exhaust upper cup.

(3) Valve half-cones.

(4) Valve springs.

(5) Inlet and outlet valves.

> **WARNING :** If a valve is replaced, it requires bedding in

Lubricate the valve rods on refitting.

> **WARNING :** If they are being re-used, keep to the positions of the valves as marked on removal

Refit ; Valve by valve :

- The valve (5)
- The spring (4)

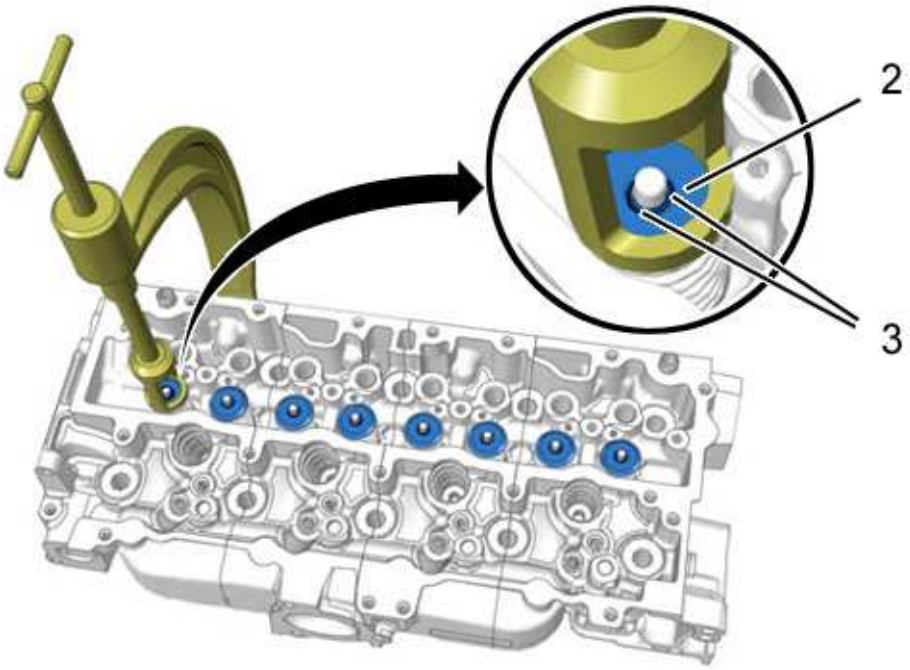

b1bg3ekd

Refit the upper cup (2).

Compress the valve springs (4) ; Using the valve spring compressor.

Refit the half cones (3).

Repeat the operation for each valve.

4 - 2 - Piston protrusion

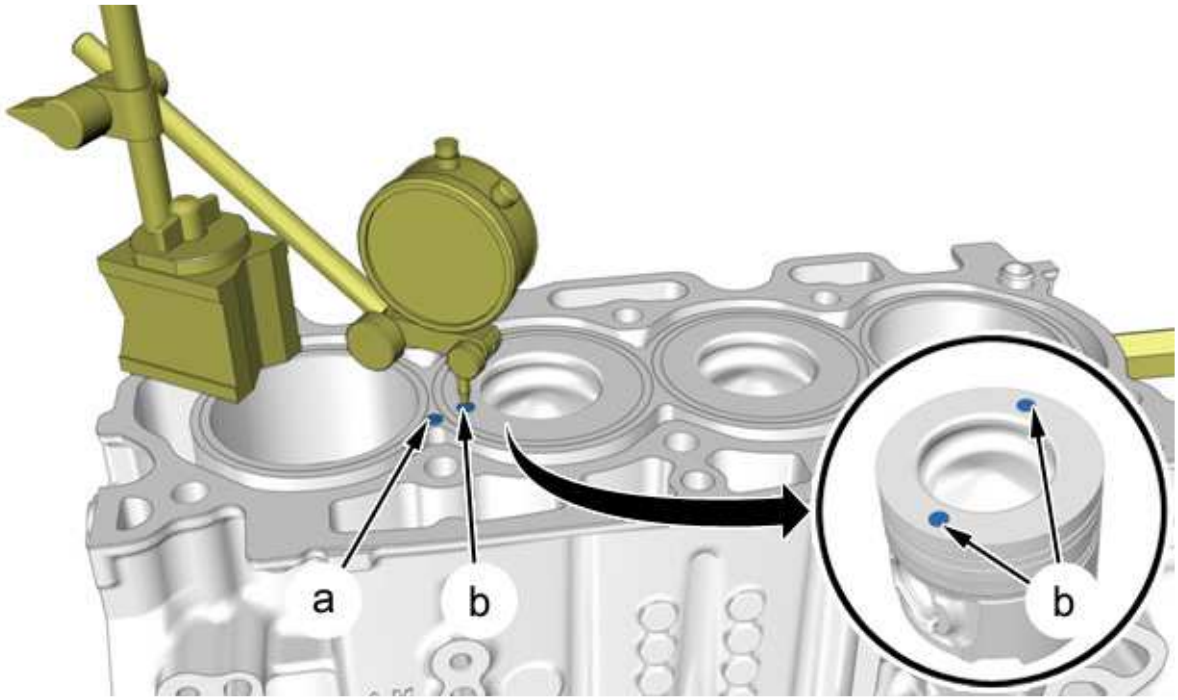

b1bg3eld

> **WARNING :** The sealing surfaces must be perfectly clean : No signs of impact, no traces of scaling permitted

Clean the surfaces to be checked.

Place the pistons of cylinders 1 and 4 at top dead centre ; Using the dial gauge.

> **NOTE :** Check the protrusion of the pistons in relation to the cylinder head seal surface (2 check points "b")

Place the dial gauge bracket on the cylinder block .

Fix the dial gauge on the bracket .

Pistons 1 - 4 :

- Place the dial gauge in a stable position on the cylinder block gasket face
- Set the dial gauge to zero (at "a")
- Move the dial gauge over the 2 control points "b" (Piston) (10 mm from the edge)
- Measure the height difference (at "b")
- Calculate the average of the 2 values measured

Pistons 2 - 3 : Repeat the operation.

Calculate the average of the 2 values measured.

> **WARNING :** Use the highest piston as a reference : Minimum variation between two consecutive cylinders = 0,10 mm

Select the thickness of the cylinder head gasket in relation to the protrusion of the pistons.

4 - 3 - Refitting : Cylinder head gasket

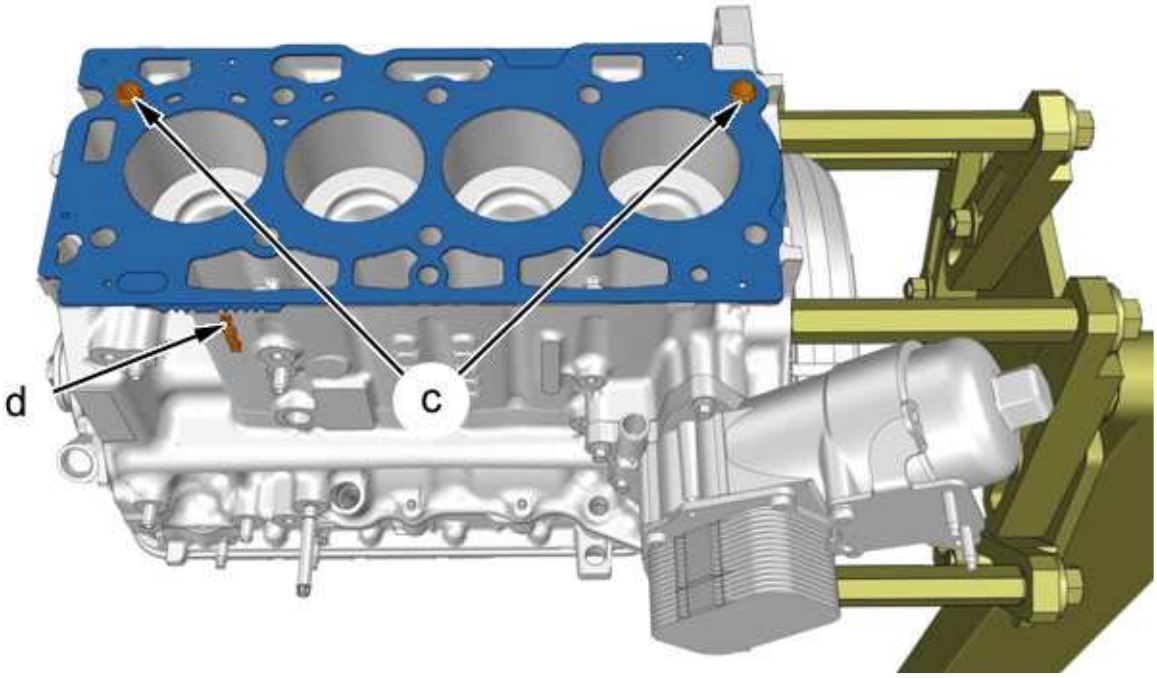

b1bg3emd

WARNING : Check that the centring pins are present (at "c")

WARNING : Check the positioning of the gasket when refitting the cylinder head. Coat the threads and the contact area under the bolt head with "G12" grease (Refer to the products catalogue)

Fit a new cylinder head gasket of a thickness determined in advance (observing the direction of fitting) (Engine identification (at "d")).

4 - 4 - Cylinder head tightening

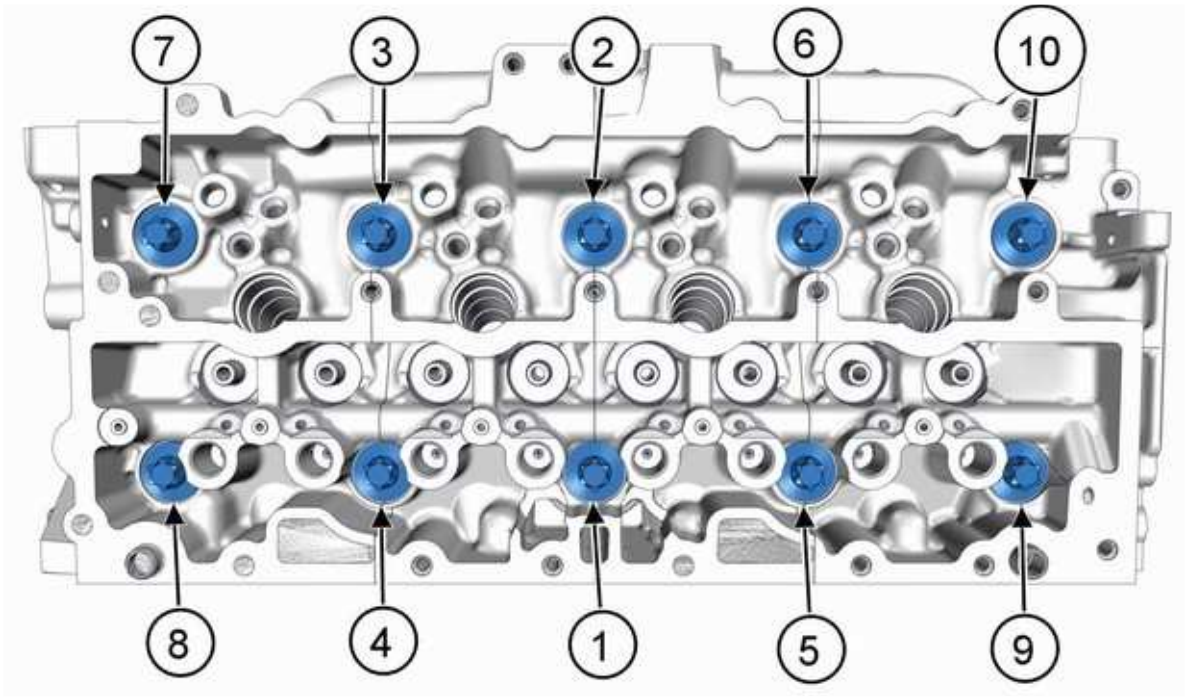

b1dg0ajd

> **WARNING :** The cylinder head must be refitted with new bolts

> **WARNING :** Fit the cylinder head bolts coated with MOLYKOTE G RAPID PLUS E3 on the threads and under the bolt heads

Refit :

- The cylinder head
- The cylinder head bolts

> **WARNING :** Follow the tightening sequence

Tighten the bearing carrier screws in the order indicated ; Using tool [0185].

Tightening procedure :

- Pre-tighten the cylinder head bolts
- Tighten the cylinder head bolts to the correct torque
- Angular-tighten the cylinder head bolts

4 - 5 - Refitting : Valve rockers

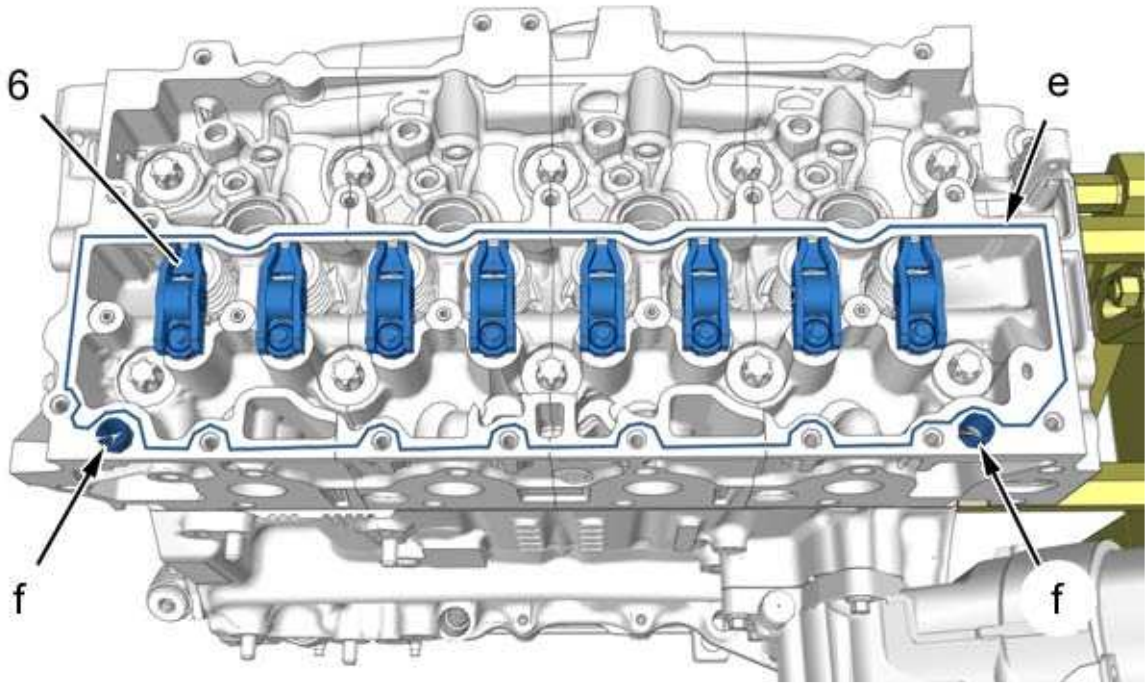

b1bg3end

> **WARNING :** If they are being re-used, keep to the positions of the valve rockers as marked on removal

> **WARNING :** Avoid direct contact between your hands and the tracks of the roller valve rockers

Oil :

- The valve tappet bodies
- The valve control rockers

Refit the cam followers (6) with their tappets.

Apply a bead of sealing paste "E10" at "e" on the edge of the joint faces.

> **WARNING :** The positioning operation must not take longer than 5 minutes

Check for the presence of the centring pins at "f".

4 - 6 - Refitting : Camshafts

> **WARNING :** Keep to the sequence of tightening as well as the tightening torques

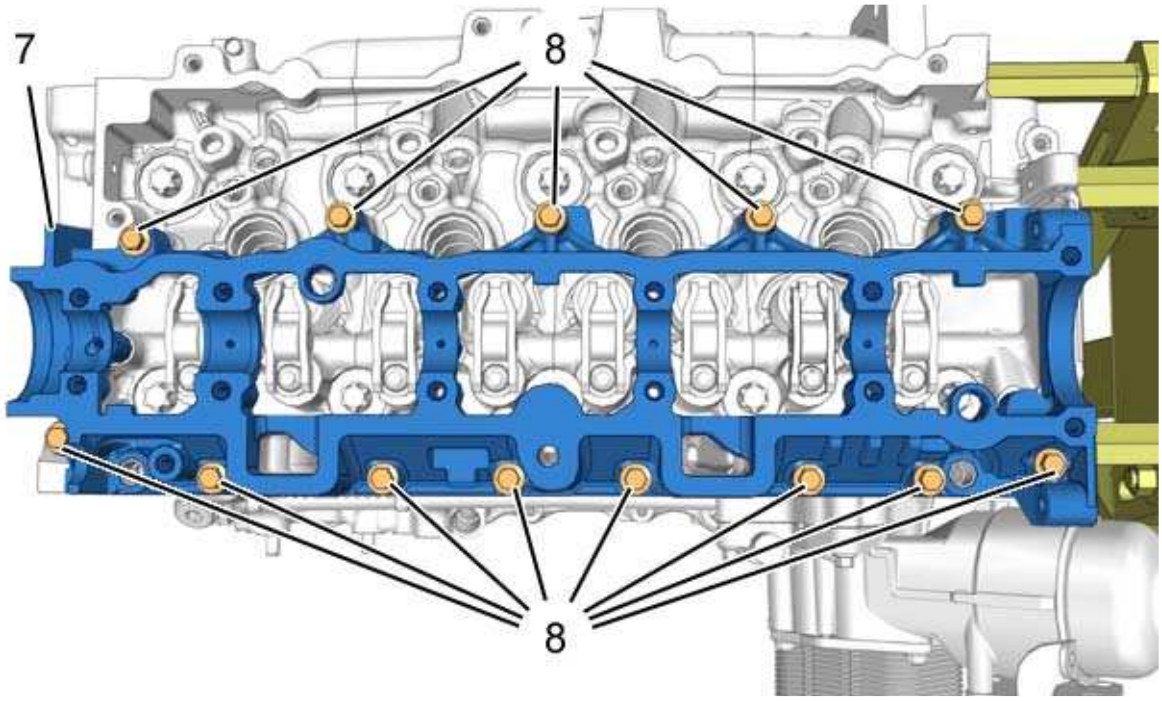

b1bg3eod

WARNING : Check that the roller valve rockers are positioned correctly

Refit :

- The lower camshaft carrier (7)
- The bolts (8)

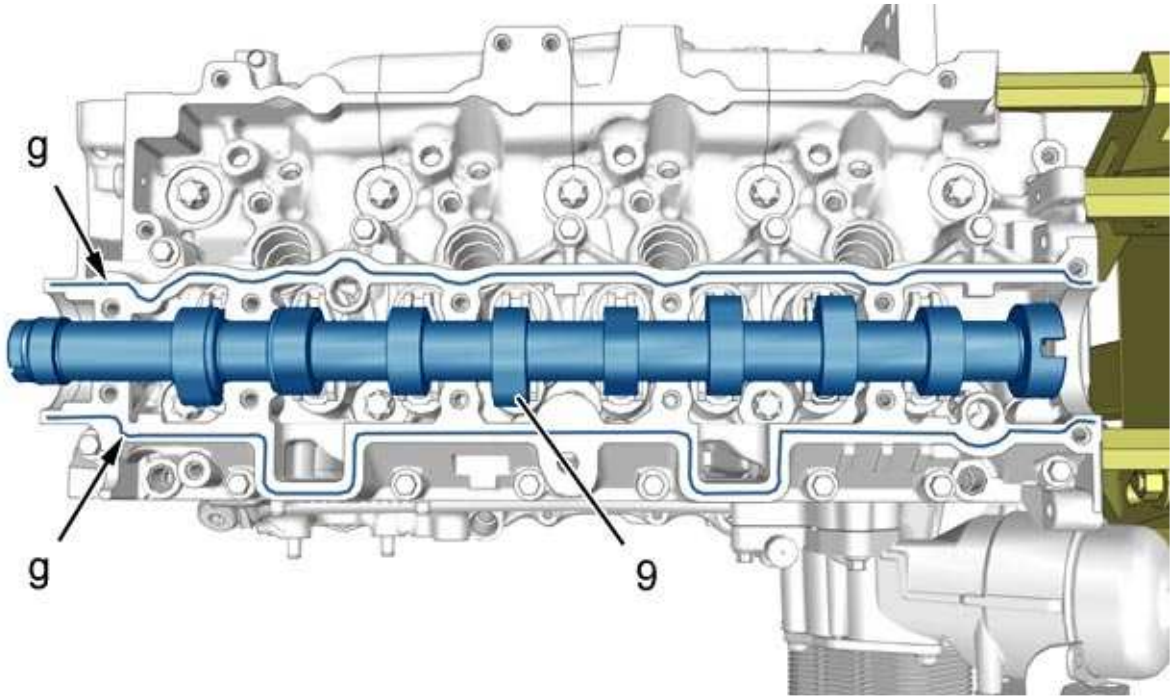

b1bg3epd

Apply a bead of sealing paste "E10" at "g" on the edge of the joint faces.

> **WARNING :** The positioning operation must not take longer than 5 minutes

Refit the camshaft (9).

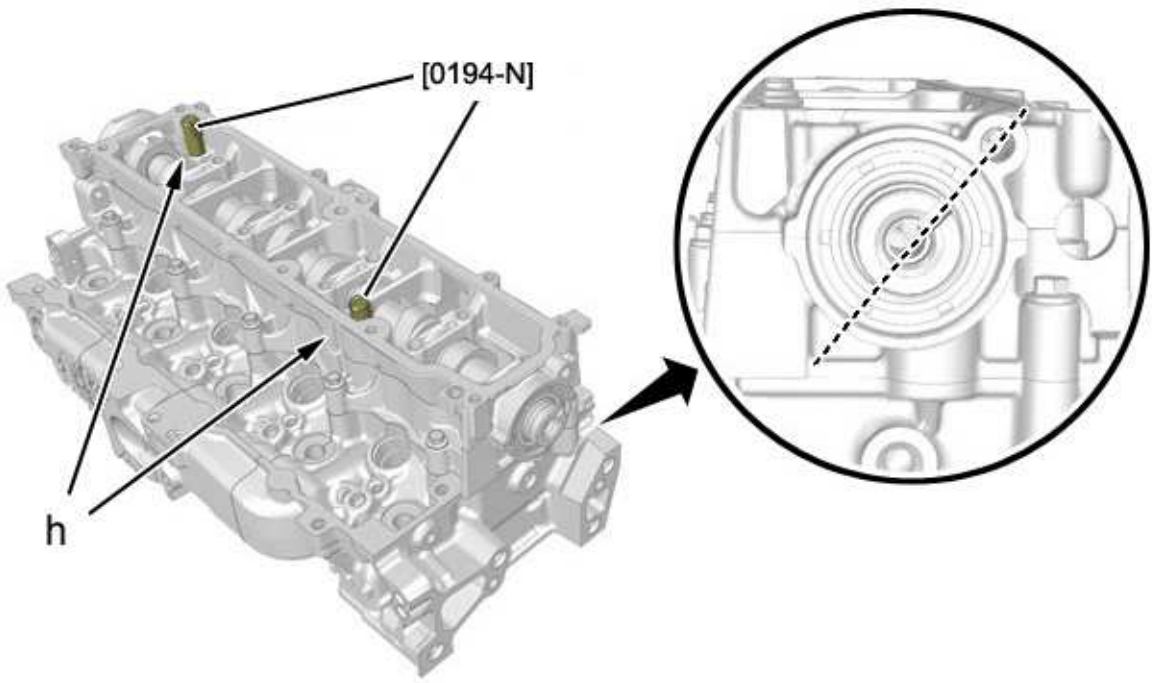

b1bg3eqd

> **WARNING :** When refitting, place the camshaft pulley notch at the top (In accordance with the illustration above)

> **WARNING :** Position the tool [0194-N] (at "h") to centre the camshaft upper cap cover

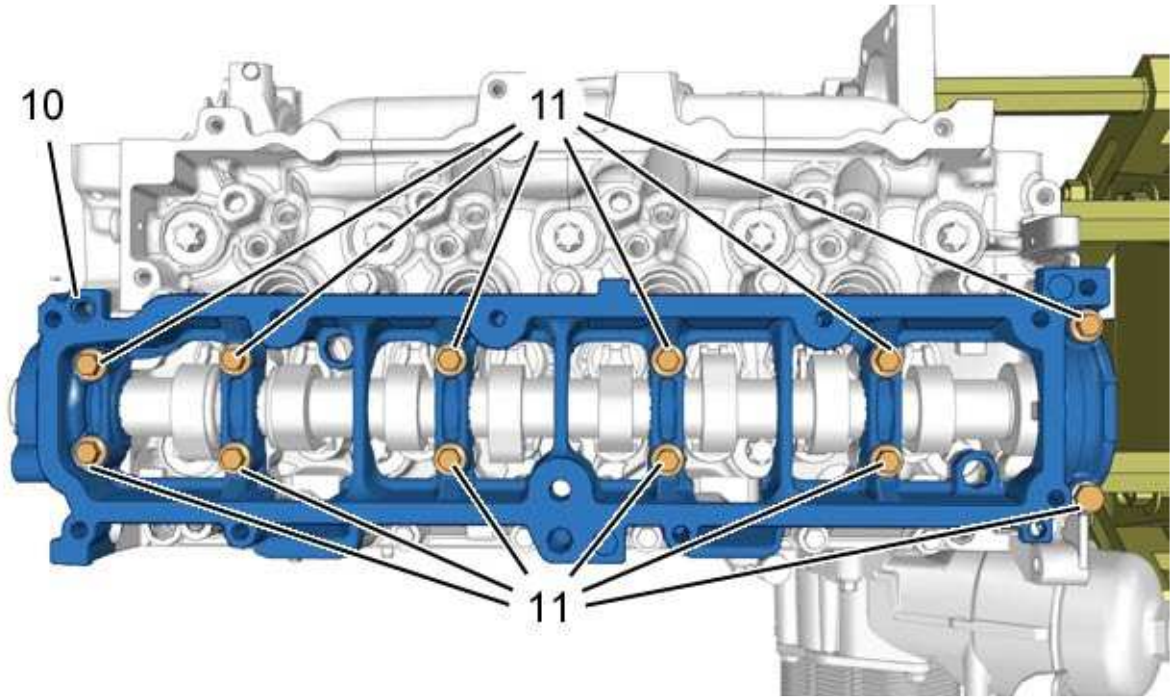

b1bg3erd

Refit :

- The upper camshaft carrier (10) ; Using the tools [0194-N]
- The bolts (11)

Remove the tools [0194-N].

WARNING : Do not lubricate the exterior of the sealing ring

WARNING : Check the condition of the lip of the ring seal on its support

WARNING : Check the absence of any mark on the bearings of the sealing ring

Refit the camshaft seal ; Using tool [0194-K].

NOTE : Keep the assembly in place for 5 seconds, allowing time to fit the sealing ring

Remove the tool [0194-K].

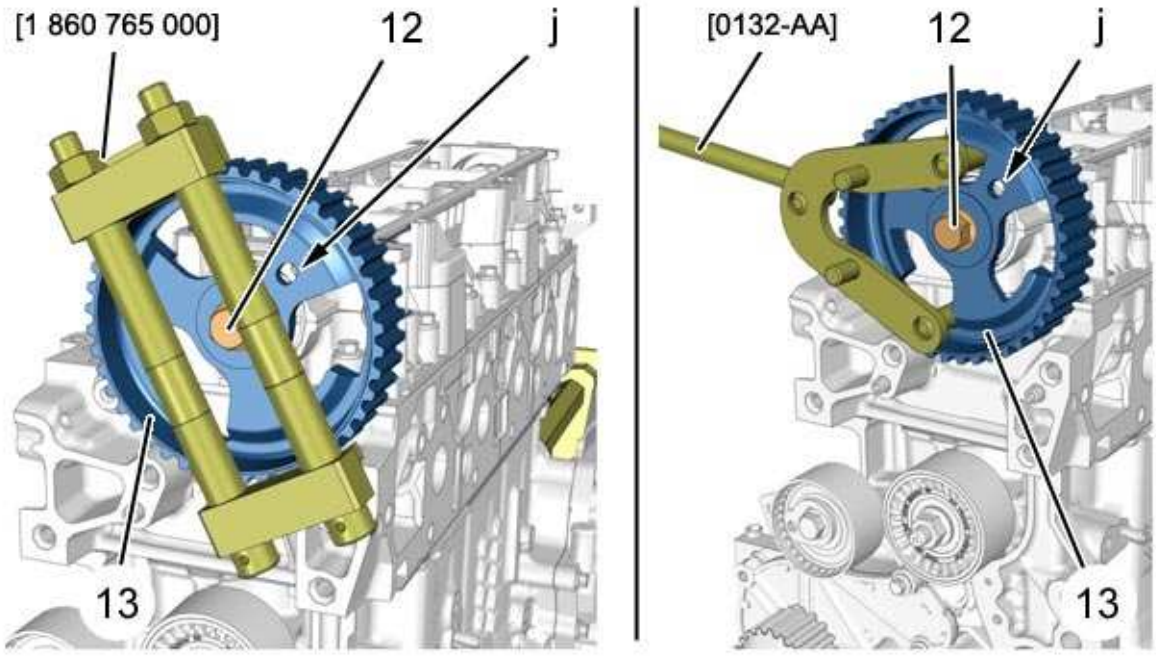

b1bg3esd

Refit ; Using the tools [0132-AA] or [1 860 765 000] :

- The pulley (13)
- The (12) bolt

Pin the camshaft pulley (at "j") ; Using tool [0194-B].

5 - REFITTING : CYLINDER HEAD COVER

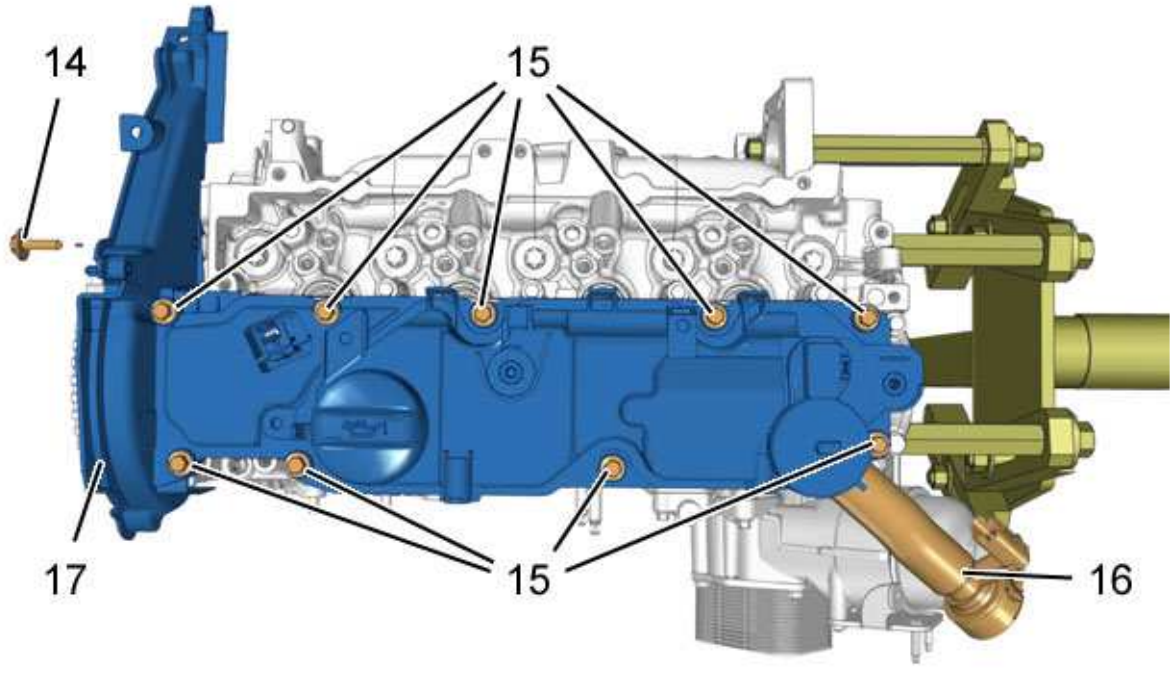

b1bg3etd

NOTE : Replace the seals (if necessary)

Refit :

- The cylinder head cover (17)
- The 9 bolts (15)
- The bolt (14)
- The pipe (16)
- The camshaft position sensor

6 - ASSEMBLING THE CYLINDER HEAD

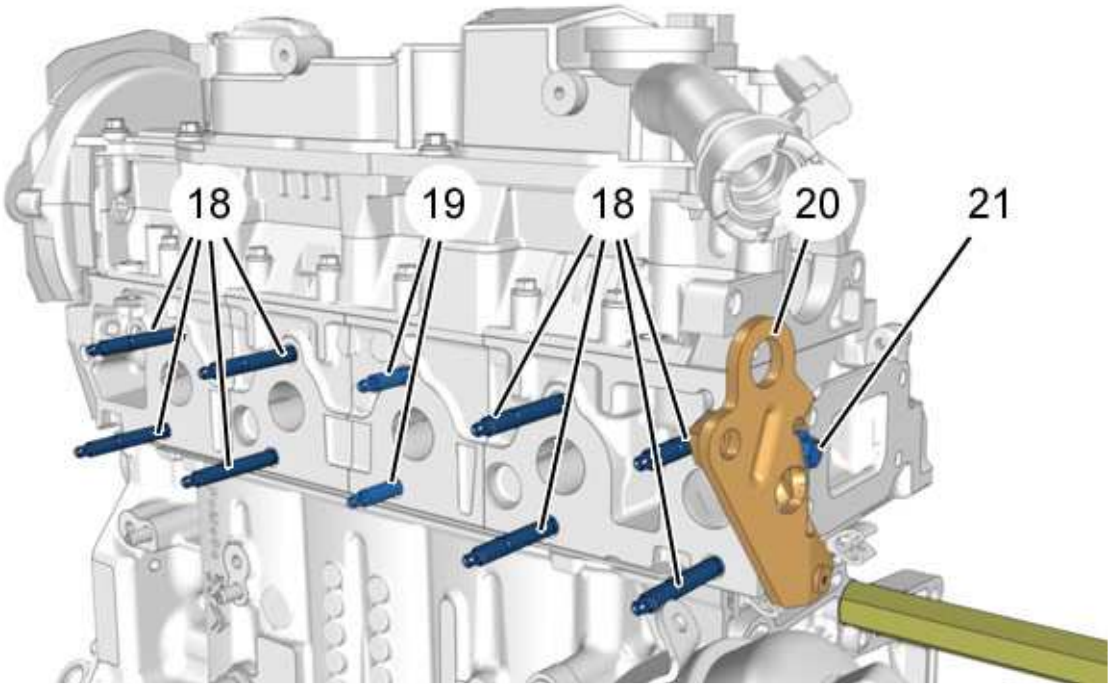

b1bg3eud

Refit :

- The 8 studs (18)
- The 2 studs (19)
- The sling hook (20)
- The bolt (21)

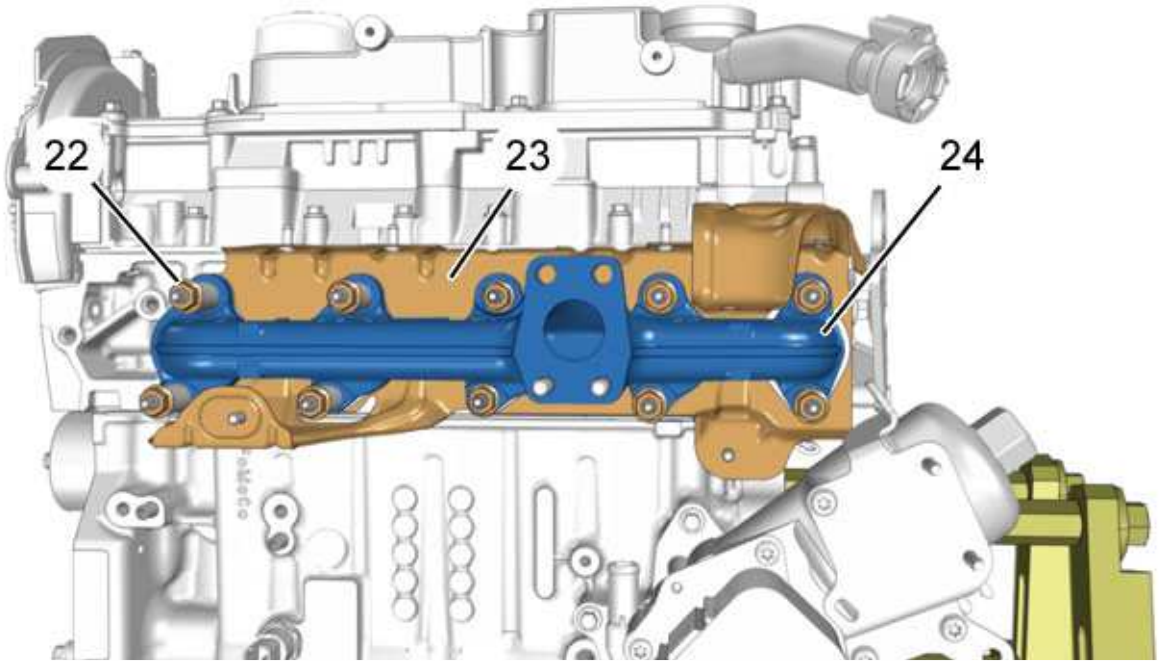

b1bg3evd

Refit :

- The heat shield (23) (including the seal)
- The exhaust manifold (24)
- The 8 spacers
- The fixing nuts (22) of the exhaust manifold (24)

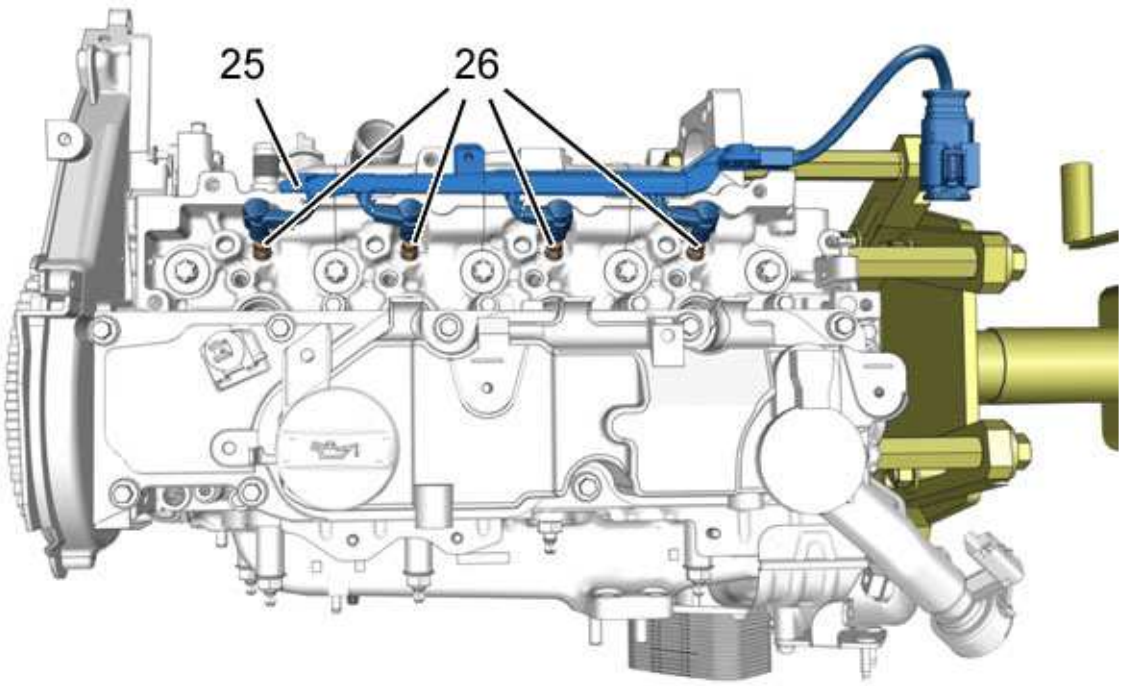

b1bg3ewd

Refit :

- The pre-heater plugs (26)
- The glow plugs supply harness (25)

7 - ASSEMBLING THE ENGINE

Continue the re-assembly by fitting the engine with the following components :

- The turbocharger
- The injection system
- The timing belt
- The vacuum pump
- The thermostat
- The power steering pump (according to equipment)
- The dipstick guide tube and the dipstick
- The air inlet pipe
- The inlet air mixer unit and its support
- The module (EGR)
- The alternator and its support
- The inlet air bypass unit (according to equipment)
- The complete fuel filter with its mounting
- The engine electric harness

OVERHAUL : DV4C/M, DV6C/D/E/U, DV6CM/DM/EM/UM ENGINES

1 - IDENTIFICATION - DATA

1 - 1 - Engine top

Identification - Data :

- Cylinder head
- Cylinder head gasket
- Cylinder head bolts
- Camshaft housing
- Camshafts
- Cam lift
- Valve seats and guides
- Valves and valve springs

1 - 2 - Under engine

Identification - Data :

- Cylinder block
- Crankshaft
- Crankshaft half bearing shells
- Conrods
- Connecting rod bearing shells
- Pistons
- Little ends
- Piston rings
- Piston head spray jets

2 - FITTING THE ENGINE TO THE STAND

Fitting : Engine on stand.

3 - DISMANTLING

Dismantling :

- Engine top
- Under engine

4 - REFITTING

Refitting :

- Under engine
- Engine top

Special service tools for ASX 9HD

NEW SPECIAL TOOL

No	PSA Part Number	Mitsubishi Part Number		Illustration	Name	use
1	0013	–			engine or gearbox mounting bracket stand	Fitting : Engine on stand
2	0132-AA	MB990767 and MD998754			toothed belt pinion locking tool	dismantling : engine top removing – refitting : camshaft Removing – Refitting : Engine ring seals Refitting : Under engine
3	0132-W	MB996224			Tool for fitting valve stem seals	Refitting : Engine top
4	0153-Q	MB996233			set of levers for releasing the cylinder head	dismantling : engine top removal – refitting : cylinder head on the vehicle
5	0165-2	–			pliers for removing elastic clips	Dismantling – re-assembly : Coolant outlet housing removing – refitting : coolant inlet manifold Removing – Refitting : EGR module assembly
6	0170-A	MB992085			pliers for removing the valve stem seals	dismantling : engine top
7	0171-A 4073-T.A	–			pressure gauge for checking the turbocharging pressure	Check : turbocharger pressure
8	0171-G4	MB996234			tool for checking inlet air pressurevacuum	Check : turbocharger pressure
9	0172-Z	–		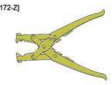	pliers for removal/refitting clic clips	dismantling – re-assembly : turbocharger pressure regulation electrovalve
10	0185	–			cylinder head bolt socket	dismantling : engine top removal – refitting : cylinder head on the vehicle Refitting : Engine top
11	0188-T	MB996221			plugs kit	Dismantling – re-assembly : Coolant temperature sensor
12	0194-2C	MB996218			Sealing washer extractor kit	Removing – refitting : Diesel injector (CONTINENTAL-SIEMENS)
13	0194-2D	MB996218			Diesel injector well cleaning tool	Removing – refitting : Diesel injector (CONTINENTAL-SIEMENS)
14	0194-A	MB996235	MB996240		crankshaft setting rod	check – setting the valve timing dismantling – re-assembly : timing belt Removing – Refitting : high pressure fuel pump(Continental – SIEMENS) Refitting : Engine top
15	0194-B		MB996241		camshaft probe	check – setting the valve timing removing – refitting : camshaft dismantling – re-assembly : timing belt Removing – Refitting : Camshaft housing Refitting : Engine top
16	0194-C		MB996242		flywheel stop	check – setting the valve timing removing – refitting : engine speed sensor dismantling – re-assembly : timing belt Refitting : Under engine Refitting : Engine top
17	0194-G		MB996243		Dummy spark plug	Checking : Pressure, engine end of compression
18	0194-J		MB996244	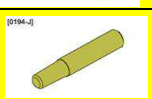	High-pressure pump pinion rotation	Removing – Refitting : high pressure fuel pump(Continental – SIEMENS)

19	0194-K	MB996235	MB996245	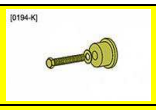	Camshaft ring seal fitting drift	Removing – Refitting : Engine ring seals Refitting : Engine top
20	0194-L		MB996246	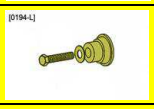	Crankshaft ring seal fitting drift (Timing gear side)	Removing – Refitting : Engine ring seals Refitting : Under engine
21	0194-M		MB996247	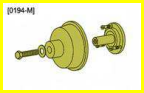	Crankshaft ring seal fitting drift (Flywheel side)	Removing – Refitting : Engine ring seals Refitting : Under engine
22	0194-N		MB996248	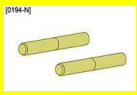	camshaft carrier positioning tool	removing – refitting : camshaft Refitting : Under engine Refitting : Engine top
23	0194-P		MB996249		Conrod half shell centring tool (Thickness 2 + 3 mm)	Refitting : Under engine
24	0194-QZ	MB996236			Crankshaft main bearing cap casing half shells positioning template	Refitting : Under engine
25	0194-T	MB996222			plugs kit	check – setting the valve timing Dismantling – re-assembly : Coolant outlet housing Removing – Refitting : Inlet air metering unit removing – refitting : fuel temperature sensor dismantling – re-assembly : high pressure fuel sensor dismantling – re-assembly : timing belt
26	0194-W	MB991883			flywheel stop	dismantling : under engine Refitting : Under engine
27	0194-X	MB996237			High-pressure pump pinion extractor	Removing – Refitting : high pressure fuel pump(Continental – SIEMENS)
28	0195-N	MB996230			8 mm long socket for tightening pre-heat glow plugs	removing – refitting : pre-heater plugs
29	0199-J	MD998727			oil sump seal cutting chisel	dismantling : under engine
30	1 860 765 000	–		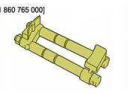	tool for immobilising the toothed belt pulley	dismantling : engine top Refitting : Engine top
31	1503-AY	–			oil pressure gauge	Check : oil pressure
32	1503-B	MB996212			Pressure take-off hose	Check : oil pressure
33	1503-J	MB996204			engine oil pressure union	Check : oil pressure
34	1520-B 5705-T	MB996238		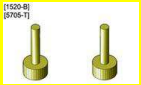	plugs for click-fit unions	Removing – Refitting : Fuel filter
35	1603 4220-T	–			Tightening kit Tightening kit HD	Removing – refitting : Diesel injector (CONTINENTAL-SIEMENS) Refitting : Engine top Removal – Refitting : High pressure fuel injection common rail
36	1603-3	–			Torque wrench adjustable from 5 to 25 Nm	removing – refitting : pre-heater plugs Removing – refitting : Diesel injector (CONTINENTAL-SIEMENS) Removal – Refitting : High pressure fuel regulator on high pressure fuel pump
37	1603-A	–			Torque wrench adjustable from 5 to 25 Nm	dismantling – re-assembly : high pressure fuel sensor

38	1604-A 4073-T.A	-	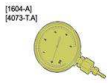	pressure gauge for checking the turbocharging pressure	Check : Low pressure fuel supply circuit (SIEMENS injection)
39	1604-C 4215-T	MB996201	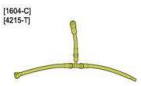	ϕ 10mm union for low pressure plug	Check : Low pressure fuel supply circuit (SIEMENS injection) Removing - Refitting : Fuel filter
40	1604-G 4251-T	-		extension	Check : Low pressure fuel supply circuit (SIEMENS injection)
41	1608-C	MB991614		Adaptor for tightening diesel injector	Refitting : Engine top
42	1613-A	MB996205	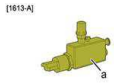	dummy high pressure fuel injection rail	Check : High pressure fuel circuit
43	1613-B	MB996205		fuel decompression container	Check : High pressure fuel circuit
44	1613-C	MB996205	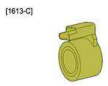	dummy flow electrovalve	Check : High pressure fuel circuit
45	1613-D	MB996205		fuel pressure display	Check : High pressure fuel circuit
46	1613-E1	MB996205	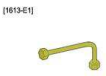	high pressure fuel pipe	Check : High pressure fuel circuit
47	1613-F	MB996205	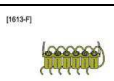	containers for return of diesel injector leaks	Check : High pressure fuel circuit
48	1613-G	MB996205	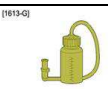	container for measuring the high pressure fuel injection pump return flow	Check : High pressure fuel circuit
49	1613-H	MB996205	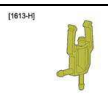	union for return of leaks on diesel injector (DELPHI injection)	Check : High pressure fuel circuit
50	1613-J	MB996205		union for return of leaks on diesel injector (BOSCH/SIE injection)	Check : High pressure fuel circuit
51	1613-K	MB996205	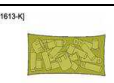	plugs kit	Check : High pressure fuel circuit
52	1613-N	-		union for return of leaks on diesel injector (engine DV6C Euro 5) (SIEMENS injection)	Check : High pressure fuel circuit
53	1613-Q	-		union for return of leaks on diesel injector (engine DV Euro 5 / Euro 6) (BOSCH injection)	Check : High pressure fuel circuit
54	1617-J	MB996239	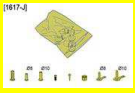	The plugs kit HDI	Removing - Refitting : Camshaft housing
55	750-T	-	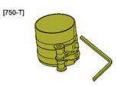	Clip for fitting the piston rings on the engine	Under engine
56	DA16	-	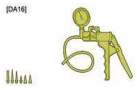	manual pressure-vacuum pump with adaptors	Check : Vacuum circuit