SERVICE BULLETIN

MITSUBISHI MOTORS

GLOBAL AFTER SALES OFFICE, MITSUBISHI MOTORS CORPORATION

PURPOSE : CORRECTION	ISSUE NO. : MSB-15EM52-501	DATE : 2015-10-05
SUBJECT : Errors in writing about the exchange of the side airbag module		<DESTINATION/MODEL> (MMNA/USTP/MEXICO/EU/ RUSSIA) Mirage/Space Star(A00A)/ Attrage (A10A) <M/Y> 13-15.5
GROUP : Gr:52(Interior & SRS Airbag)		

1. Description :

Please refer to the attached document for the correction of the error in writing existing in the applicable service manual.

(Correct) seatback assembly ← (Error) seatback frame

2. Affected service manuals :

Please refer to the attached document(Attached sheet 1)

3. About the details :

Please refer to the attached document (Attached sheets 3-4)

Attached sheet 1

＜For overseas market＞

＜EU/RUSSIA＞

Applicable manual	Pub. No.	Applicable title (INFO ID)	Content
2013 MIRAGE/SPACE STAR Workshop Manual	CA0E13E1-CD (ENG) CA0F13E1-CD (FRE) CA0G13E1-CD (GER) CA0S13E1-CD (SPA) CA0I13E1-CD (ITA) RUSSIA:N/A	SIDE-AIRBAG MODULE(S) REMOVAL AND INSTALLATION (M524-03-650-75100-01)	Attached sheet 3 (1/2)-(2/2)
2014 MIRAGE/SPACE STAR Workshop Manual	CA0E14E1-CD (ENG) CA0F14E1-CD (FRE) CA0G14E1-CD (GER) CA0S14E1-CD (SPA) CA0I14E1-CD (ITA) RUSSIA:N/A	SIDE-AIRBAG MODULE(S) REMOVAL AND INSTALLATION (M524-03-650-75100-01)	Attached sheet 3 (1/2)-(2/2)
2015 MIRAGE/SPACE STAR Workshop Manual	CA0E15E1-CD (ENG) CA0F15E1-CD (FRE) CA0G15E1-CD (GER) CA0S15E1-CD (SPA) CA0I15E1-CD (ITA) RUSSIA:N/A	SIDE-AIRBAG MODULE(S) REMOVAL AND INSTALLATION (M524-03-650-75100-01)	Attached sheet 3 (1/2)-(2/2)
2015.5 MIRAGE/SPACE STAR Workshop Manual	CA0E15E2-CD (ENG) CA0F15E2-CD (FRE) CA0G15E2-CD (GER) CA0S15E2-CD (SPA) CA0I15E2-CD (ITA) RUSSIA:N/A	SIDE-AIRBAG MODULE(S) REMOVAL AND INSTALLATION (M524-03-650-75100-01)	Attached sheet 3 (1/2)-(2/2)
2014 ATTRAGE Workshop Manual	CA1E14E1-CD (ENG) CA1F14E1-CD (FRE) CA1G14E1-CD (GER) CA1S14E1-CD (SPA) CA1I14E1-CD (ITA) RUSSIA:N/A	SIDE-AIRBAG MODULE(S) REMOVAL AND INSTALLATION (M524-03-650-75100-01)	Attached sheet 3 (1/2)-(2/2)
2015 ATTRAGE Workshop Manual	CA1E15E1-CD (ENG) CA1F15E1-CD (FRE) CA1G15E1-CD (GER) CA1S15E1-CD (SPA) CA1I15E1-CD (ITA) RUSSIA:N/A	SIDE-AIRBAG MODULE(S) REMOVAL AND INSTALLATION (M524-03-650-75100-01)	Attached sheet 3 (1/2)-(2/2)
2015.5 ATTRAGE Workshop Manual	CA1E15E2-CD (ENG) CA1F15E2-CD (FRE) CA1G15E2-CD (GER) RUSSIA:N/A	SIDE-AIRBAG MODULE(S) REMOVAL AND INSTALLATION (M524-03-650-75100-01)	Attached sheet 3 (1/2)-(2/2)

＜MMNA/MEXICO＞

Applicable manual	Pub. No.	Applicable title (INFO ID)	Contents
2014 MIRAGE SERVICE MANUAL	MSCD-016B-2014 MEXICO:DRAFT	SIDE-AIRBAG MODULE(S) REMOVAL AND INSTALLATION (M524-03-650-75100-01)	Attached sheet 4 (1/2)-(2/2)
2015 MIRAGE SERVICE MANUAL	MSCD-016B-2015 MEXICO:DRAFT	SIDE-AIRBAG MODULE(S) REMOVAL AND INSTALLATION (M524-03-650-75100-01)	Attached sheet 4 (1/2)-(2/2)

Attached sheet 3 (1/2)

SIDE-AIRBAG MODULE(S)

REMOVAL AND INSTALLATION

M1524036500751

⚠ CAUTION

- **Disconnect the negative battery terminal and wait for 60 seconds or more before starting work. Insulate the disconnected (–) terminal by wrapping the tape (Refer to the item 5 of Service Precautions P.52B-5).**
- **Never attempt to disassemble or repair the air bag module. If faulty, replace it with new one(s).**
- **Handle the front seatback ~~frame~~ (with side-airbag module) with sufficient caution, and do not drop the assembly or allow contact with water, oil, or others. If denting, cracking, or deformation is discovered, replace it with new one(s).**
- **Store the front seatback ~~frame~~ (with side-airbag module) on a flat surface. Also, do not put anything on it.**
- **Do not store the front seatback ~~frame~~ (with side-airbag module) in a place where the temperature exceeds 93°C.**
- **After the side-airbag deployment, replace the front seatback ~~frame~~ (with side-airbag module) with the new one.**
- **Put on gloves and safety glasses when handling deployed air bags.**
- **When discarding the air bag module, make sure to deploy the air bag before the disposal (Refer to P.52B-153).**

assembly <Correct> <Incorrect> assembly <Correct> <Incorrect> <Incorrect> assembly <Correct> <Incorrect>

Pre-removal operation
- Disconnect the negative (–) battery terminal.
- Turn ignition switch to the LOCK (OFF) position.

Attached sheet 3 (2/2)

<Incorrect>

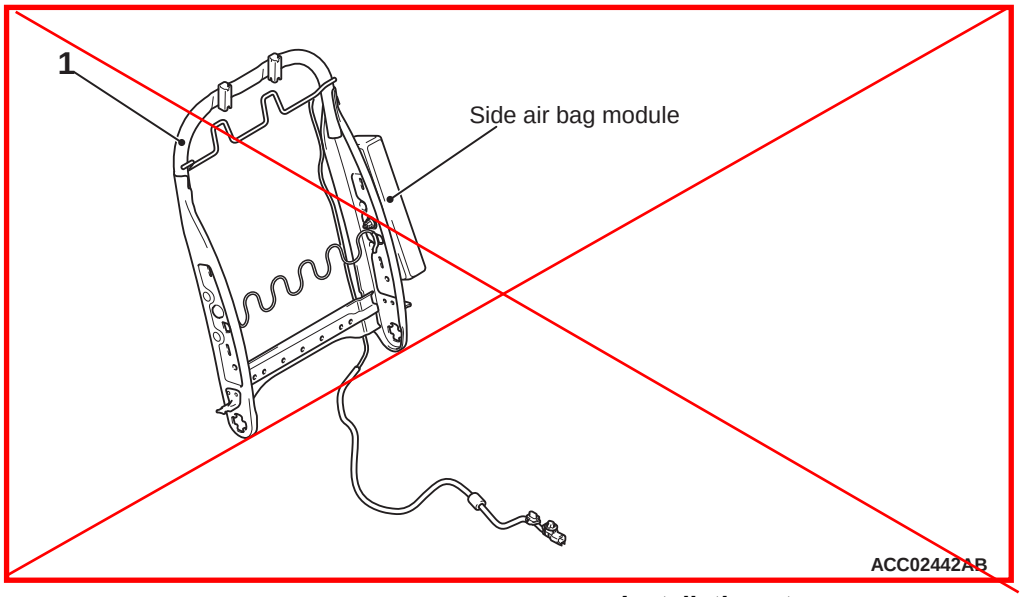

Removal step

- Front seat assembly (Refer to GROUP 52A – Front Seat Assembly) <Correct>

<<A>> 1. Front seatback ~~frame~~ (with side-airbag module) (Refer to GROUP 52A – Front Seat Assembly) <Incorrect> assembly

Installation step

>>A<< • Pre-installation inspection <Incorrect>

1. Front seatback ~~frame~~ (with side-airbag module) (Refer to GROUP 52A – Front Seat Assembly)
- Front seat assembly (Refer to GROUP 52A – Front Seat Assembly)

>>B<< • Post-installation inspection

REMOVAL SERVICE POINT

<<A>> FRONT SEATBACK FRAME (WITH SIDE-AIRBAG MODULE) REMOVAL

<Incorrect> ASSEMBLY

⚠ CAUTION

- **When replacing the side-airbag module, replace the front seatback frame.**
- **Never use an electric tester to diagnose the air bag module circuit. Never attempt to disassemble the air bag module.**
- **Store the removed front seatback frame in a clean and dry place.**
- **When discarding the air bag module, discard after deploying the air bag as specified in the service procedure (Refer to P.52B-153).**

<Incorrect> <Correct>
<Correct> assembly
<Incorrect>

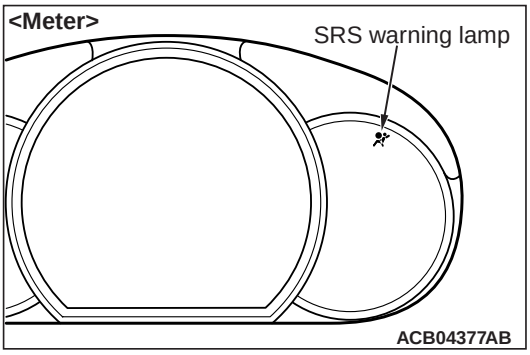

2. Check that the SRS warning lamp is illuminated for 6 to 8 seconds, and extinguished afterward.
3. If the lamp does not extinguish, perform the troubleshooting (Refer to P.52B-12).

INSTALLATION SERVICE POINTS

>>A<< PRE-INSTALLATION INSPECTION

1. Before the installation, check the air bag module (Refer to P.52B-141).

<Incorrect>

NOTE: Even when installing a new front seatback frame (with side-airbag module), perform an inspection before the installation.

<Correct> assembly

2. Connect the negative auxiliary battery terminal.

⚠ CAUTION

Be sure to turn the ignition key to the LOCK (OFF) position when connecting or disconnecting M.U.T.-III.

3. Connect M.U.T.-III to the diagnosis connector (16 pin).
4. Turn the ignition switch to the ON position.
5. Read the diagnosis code, and check that everything is normal except the air bag module open circuit.
6. Ignition switch to the LOCK (OFF) position.

>>B<< POST-INSTALLATION INSPECTION

1. Turn the ignition switch to the "ON" position.

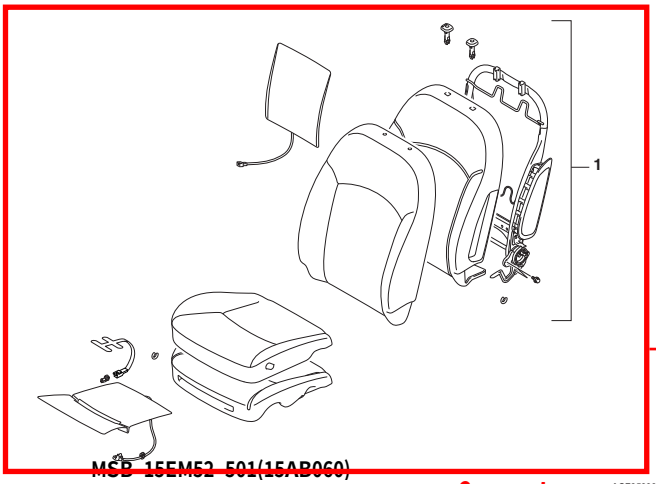

<Correct>

INSPECTION

M1524036600242

⚠ CAUTION

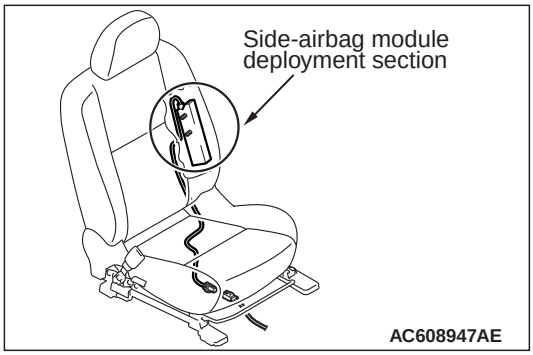

- **Never measure the side-airbag module (squib) circuit resistance even with the specified tester. Measuring the circuit resistance with a tester causes accidental air bag deployment due to current that flows or static, resulting in serious personal injury.**
- **When replacing the parts, discard the old parts after deploying the air bag according to the specified procedure (Refer to P.52B-153).**

If any malfunction is found in the following inspections, replace the front seatback pad and frame assembly with the new one. Discard the removed front seatback pad and frame assembly after deploying the air bag according to the specified procedure (Refer to P.52B-153).

1. Dent or deformation to side-airbag module deployment part
2. Check the harness and connector for damage and the terminal for deformation.

Attached sheet 3 (1/2)

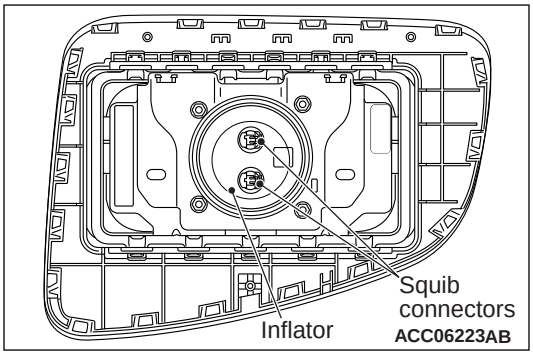

1. Check the harness and connector for damage and the terminal for deformation.
2. Check the air bag inflator cases for dents, cracks or deformation.
3. Check the air bag module for proper installation.

SIDE-AIRBAG MODULE(S)

REMOVAL AND INSTALLATION

M1524036500751

⚠ WARNING

- ***Never attempt to disassemble or repair the side-air bag modules. If faulty, replace it.***
- ***Do not drop the side-air bag modules or allow contact with water, grease or oil. Replace it if a dent, crack, deformation or rust is detected.***
- ***Do not expose the side-air bag modules to temperatures over 93 ℃ (199 ℉).***
- ***After the air bag deployment, replace the air bag module with a new one.***
- ***Wear gloves and safety glasses when handling air bags that have already deployed.***
- ***Certain components of this vehicle, such as air bag modules and seat belt pre-tensioners, may contain perchlorate materials. Before deployment and/or disposal of these components, review and comply with all applicable Federal, state and local regulations.***
- ***An undeployed side-air bag module should only be disposed of in accordance with the procedures (Refer to P.52B-268).***

Pre-removal operation
- Turn ignition switch to the LOCK (OFF) position.

Attached sheet 4 (2/2)

<Incorrect>

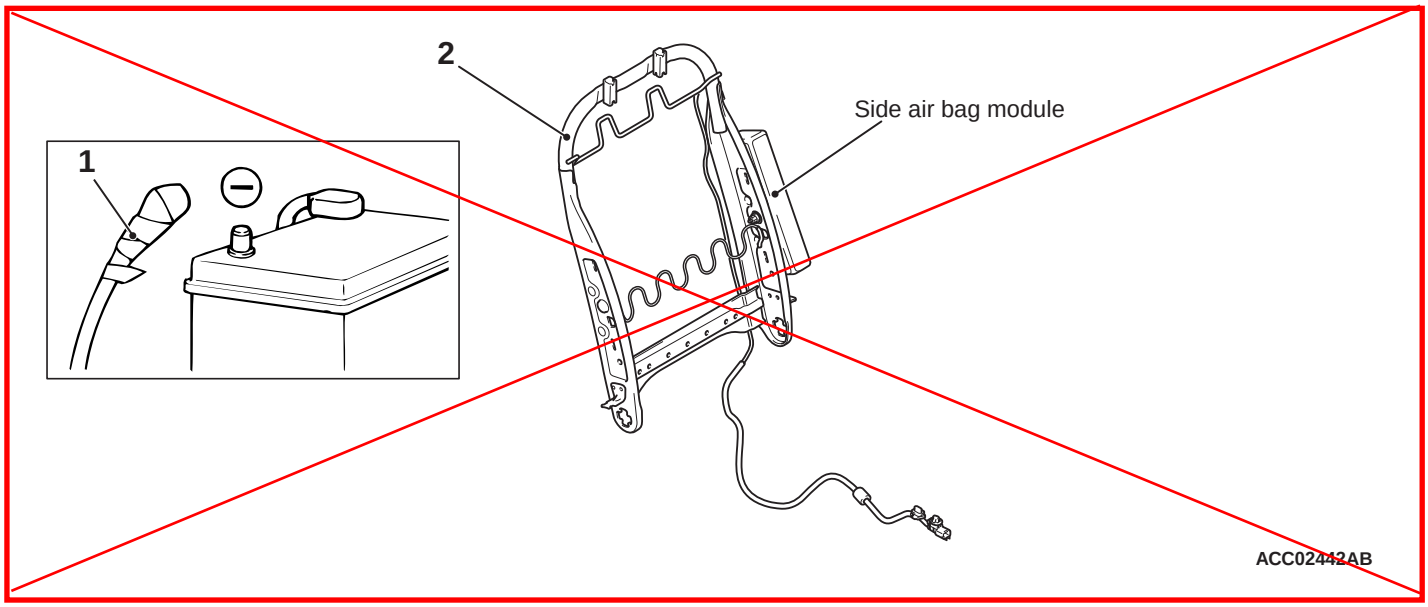

Attached sheet 4 (2/2)

Removal step

<<A>>
1. Negative (–) battery cable
- Front seat assembly (Refer to GROUP 52A – Front Seat Assembly P.52A-17)

<<B>>
2. Front seatback frame (with side-airbag module) (Refer to GROUP 52A – Front Seat Assembly P.52A-22)

<Incorrect> <Correct> assembly

Installation step

>>A<<
- Pre-installation inspection
2. Front seatback frame (with side-airbag module) (Refer to GROUP 52A – Front Seat Assembly P.52A-22)
- Front seat assembly (Refer to GROUP 52A – Front Seat Assembly P.52A-17)
1. Negative (–) battery cable

>>B<<
- Post-installation inspection

<Incorrect>

REMOVAL SERVICE POINT

<<A>> NEGATIVE (–) BATTERY CABLE DISCONNECTION

⚠ DANGER

Wait at least 60 seconds after disconnecting the battery cable before doing any further work (Refer to P.52B-5).

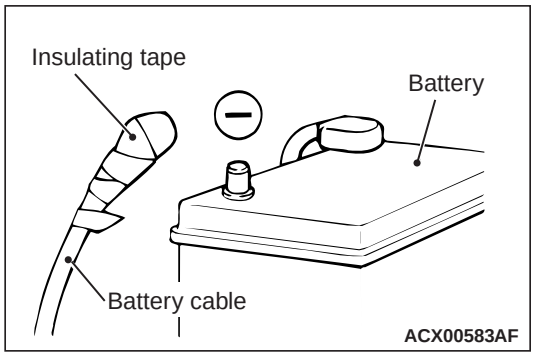

⚠ WARNING

Battery posts, terminals and related accessories contain lead and lead compounds. WASH HANDS AFTER HANDLING.

Disconnect the negative (–) battery cable from the battery and tape the terminal to prevent accidental connection and air bag(s) deployment.

<Incorrect> ASSEMBLY <Correct>

<<B>> FRONT SEATBACK FRAME (WITH SIDE-AIRBAG MODULE) REMOVAL

⚠ CAUTION

- **When replacing the side-airbag module, replace the front seatback frame.**
- **Never use an electric tester to diagnose the air bag module circuit. Never attempt to disassemble the air bag module.**
- **Store the removed front seatback frame in a clean and dry place.**
- **When discarding the air bag module, discard after deploying the air bag as specified in the service procedure (Refer to P.52B-268).**

<Incorrect> assembly <Correct>

<Incorrect>

assembly <Correct>

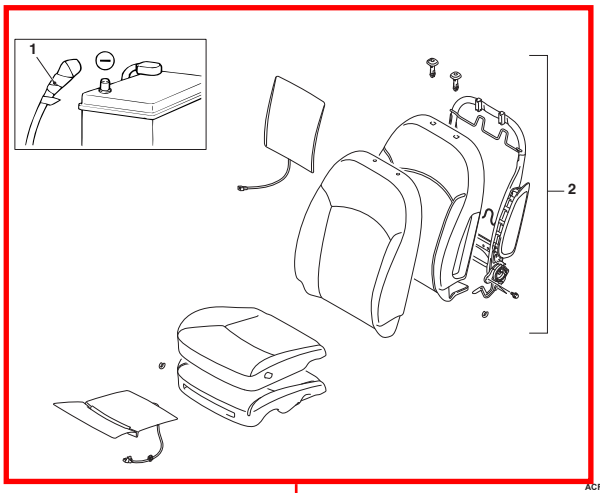

<Correct>

Attached sheet 4 (1/2)

INSTALLATION SERVICE POINTS

>>A<< PRE-INSTALLATION INSPECTION

⚠ WARNING

Dispose of side-air bag modules only according to the specified procedure (Refer to P.52B-268).

1. When installing the new side-air bag modules, refer to "INSPECTION" (P.52B-246).
2. Connect the negative (–) battery cable.