MITSUBISHI MOTORS

SERVICE BULLETIN

GLOBAL AFTER SALES OFFICE, MITSUBISHI MOTORS CORPORATION

PURPOSE : CHANGE	ISSUE NO. : MSB-15EX14_70_80_90-001	DATE : 2015-05-07
SUBJECT : Changing the cooling fan controller to the fan control relay		<DESTINATION/MODEL> (As per attached sheet 1) <M/Y> 14.5
GROUP : Gr:14/70/80/90		OUTLANDER PHEV(GG0W)

1. Description :

Please refer to the attached document for the information about the change of mention in the applicable service manual.

2. Affected service manuals :

Please refer to the attached document (Attached sheet 1)
※Please refer to the manuals for EU to the OUTLANDER PHEV for G.EXP and Brazil in this MSB.

3. About the details :

Please refer to the attached document (Attached sheet 2-13)

4. Effective time : From the vehicles produced from the middle of Oct 2014.

Attached sheet 1

Applicable manual	Pub. No.	Applicable title (INFO-ID)	Contents
2014.5 OUTLANDER/ OUTLANDER PHEV Workshop Manual CD-ROM	FOR EU/EXP/BRAZIL CGFE14E3-CD (ENGLISH) CGFF14E3-CD (FRENCH) CGFG14E3-CD (GERMAN) CGFS14E3-CD (SPANISH) CGFI14E3-CD (ITALIAN)	INSPECTION PROCEDURE 3: RADIATOR FAN And CONDENSER FAN DO NOT OPERATE <4B1-PHEV> (M141-00-672-24701-01)	Attached sheet 2
		COOLING FAN CONTROLLER INSPECTION <4B1-PHEV> (M141-00-750-02400-01)	Attached sheet 3
		RADIATOR REMOVAL AND INSTALLATION (M141-00-154-05101-01)	Attached sheet 4
		RELAY <PHEV> (M701-00-042-52500-01)	Attached sheet 5
		ECU <PHEV> (M701-00-052-22100-01)	Attached sheet 6
		ENGINE COMPARTMENT <LHD> (M801-00-039-46300-01)	Attached sheet 7
		ENGINE COMPARTMENT <RHD> (M801-00-039-43000-01)	Attached sheet 8
		CENTRALIZED JUNCTION <LOW VOLTAGE> (M901-00-034-44300-01)	Attached sheet 9
		DRIVE BATTERY COOLING SYSTEM (M901-04-010-01000-01)	Attached sheet 10
		EV COOLING SYSTEM (M901-04-020-01700-01)	Attached sheet 11
		ENGINE COOLING SYSTEM (M901-00-105-81300-01)	Attached sheet 12
		AIR CONDITIONER (M901-03-211-80300-01)	Attached sheet 13

Insert the Attached sheet 2 (4/6) to 1 (6/6).

<Old>

Inspection Procedure 3: Radiator Fan and Condenser Fan do not Operate <4B1-PHEV>

OPERATION
The engine coolant temperature sensor senses engine coolant temperature. The oil thermistor senses cooling oil temperature. The A/C control panel (A/C-ECU) determines whether the A/C switch is turned on or off. The PHEV-ECU controls the radiator and the condenser fan according to these signals.

TECHNICAL DESCRIPTION
- If the radiator fan or the condenser fan does not run, a fault may occur in wiring harness wires/connectors, the fusible links, the relay, the fan motor or the PHEV-ECU.
- Alternatively, if a fault occurs in the CAN bus line, the plug-in hybrid EV system, the engine-ECU or the A/C system, the cooling fan may not run.

PROBABLE CAUSES
- Malfunction of CAN bus system.
- Defective plug-in hybrid EV system
- Malfunction of A/C control panel (A/C-ECU)
- Damaged harness or connector.
- Malfunction of fusible link SBF1.
- Malfunction of fusible link SBF4.
- Malfunction of water temperature sensor
- Malfunction of radiator fan relay.
- Malfunction of condenser fan relay.
- Malfunction of radiator fan motor.
- Malfunction of condenser fan motor.
- Malfunction of cooling fan controller 1
- Malfunction of cooling fan controller 2
- Malfunction of PHEV-ECU

DIAGNOSIS PROCEDURE

⚠ CAUTION
- **If there is any problem in the CAN bus lines, an incorrect diagnosis code may be stored. Prior to this diagnosis, diagnose the CAN bus lines.**
- **Before replacing the ECU, ensure that the CAN bus lines is normal.**

STEP 1. Check the CAN bus system diagnosis.
Using M.U.T.-III, perform CAN bus diagnosis (Refer to GROUP 54C – Explanation About The M.U.T-III CAN Bus Diagnostics).

Q: Is the check result satisfactory?
YES : Go to Step 2.
NO : Repair the CAN bus lines (Refer to GROUP 54C – Troubleshooting, CAN Bus Diagnostic Table). Then go to Step 9.

STEP 2. Actuator test. <PHEV-ECU>
Using M.U.T.-III, carry out the MPI system actuator test (Refer to GROUP 54D – Troubleshooting, Actuator Test Reference Table).
- Item No.3: Radiator fan 1
- Item No.4: Radiator fan 2

Q: Is the check result normal?
YES : Go to Step 18.
NO : Go to Step 3.

STEP 3. Check the diagnosis code. <PHEV-ECU>
Using M.U.T.-III, check PHEV-ECU diagnosis code (Refer to GROUP 54D – Troubleshooting, Diagnosis Function).

Q: Is any diagnosis code stored?
YES : Repair the PHEV-ECU system (Refer to GROUP 54D – Troubleshooting, Inspection Chart for Diagnosis Code). Then go to Step 20.
NO : Go to Step 4.

STEP 4. Check the diagnosis code. <A/C control panel (A/C-ECU)>
Using M.U.T.-III, check A/C control panel (A/C-ECU) diagnosis code (Refer to GROUP 55 – Troubleshooting, Diagnosis Function <PHEV>).

Q: Is any diagnosis code stored?
YES : Repair the A/C control panel (A/C-ECU) system. (Refer to GROUP 55 – Troubleshooting, Inspection Chart for Diagnosis Code <PHEV>). Then go to Step 20.
NO : Go to Step 5.

STEP 5. Check the radiator fan relay, the condenser fan relay, and the fan control relay.
Refer to P.14A-19.

Q: Is the check result normal?
YES : Go to Step 6.
NO : Replace the damaged radiator fan relay (Refer to P.14A-19). Then go to Step 20.

STEP 6. Check the radiator fan motor and the condenser fan motor.
Refer to P.14A-22.

Q: Is the check result normal?
YES : Go to Step 7.
NO : Replace the damaged radiator fan motor (Refer to P.14A-49). Then go to Step 20.

STEP 7. Check of short to power supply, short to earth, open circuit and harness damage in power supply line between fusible link (SBF4) and cooling fan controller 1 connector.

Q: Is the check result normal?
YES : Go to Step 8.
NO : Repair the connector(s) or wiring harness. Then go to Step 20.

STEP 8. Check of short to power supply, short to earth, open circuit and harness damage in power supply line between fusible link (SBF1) and cooling fan controller 2 connector.

Q: Is the check result normal?
YES : Go to Step 9.
NO : Repair the connector(s) or wiring harness. Then go to Step 20.

STEP 9. Check of short to power supply, short to earth, open circuit and harness damage in power supply line between cooling fan controller 1 connector and radiator fan motor connector.

Q: Is the check result normal?
YES : Go to Step 10.
NO : Repair the connector(s) or wiring harness. Then go to Step 20.

STEP 10. Check of short to power supply, short to earth, open circuit and harness damage in power supply line between cooling fan controller 2 connector and condenser fan motor connector.

Q: Is the check result normal?
YES : Go to Step 11.
NO : Repair the connector(s) or wiring harness. Then go to Step 20.

STEP 11. Check of short to power supply, short to earth, open circuit and harness damage in body earth line between cooling fan controller 1 connector and body earth.

Q: Is the check result normal?
YES : Go to Step 12.
NO : Repair the connector(s) or wiring harness. Then go to Step 20.

STEP 12. Check of short to power supply, short to earth, open circuit and harness damage in body earth line between cooling fan controller 2 connector and body earth.

Q: Is the check result normal?
YES : Go to Step 13.
NO : Repair the connector(s) or wiring harness. Then go to Step 20.

STEP 13. Check of short to power supply, short to earth, open circuit and harness damage in WTS, WTSE line between engine ECU connector and water temperature sensor connector

Q: Is the check result normal?
YES : Go to Step 14.
NO : Repair the connector(s) or wiring harness. Then go to Step 20.

STEP 14. Service data <engine ECU>
Using M.U.T.-III, check engine-ECU service data (Refer to GROUP 13E – Troubleshooting, Service data).
- Item No.6: water temperature sensor

Q: Is the check result normal?
YES : Go to Step 15.
NO : Replace the damaged water temperature sensor (Refer to P.14A-35 <4B1-PHEV>). Then go to Step 20.

STEP 15. Actuator test. <engine ECU and PHEV-ECU>
Using M.U.T.-III, carry out the actuator test.
- Item No.14: Cooling fan (Refer to GROUP 13E – Troubleshooting, Actuator Test).
- Item No.3: Radiator fan relay 1 actuate (Refer to GROUP 54D – Troubleshooting, Actuator Test Reference Table .)
- Item No.4: Radiator fan relay 2actuate (Refer to GROUP 54D – Troubleshooting, Actuator Test Reference Table .)
- Item No.10: Condenser fan relay (Refer to GROUP 55 – Troubleshooting, Actuator Test Reference Table .)

Q: Is the check result normal?
YES : Go to Step 17.
NO : Go to Step 16.

STEP 16. Check the cooling fan controller.
Refer to P.14A-23.

Q: Is the cooling fan controller in good condition?
YES : It can be assumed that this malfunction is intermittent (Refer to GROUP 00 – How to Use Troubleshooting/Inspection Service Points, How to Cope with Intermittent Malfunction).
NO : Replace the damaged cooling fan controller. (Refer to P.14A-49 <PHEV>). Then go to Step 20.

STEP 17. Check the fusible link SBF1 and SBF4.

Q: Is the fusible link SBF1 and SBF4 in good condition?
YES : Go to Step 18.
NO : Replace the damaged fusible link.Then go to Step 20.

STEP 18. Actuator test. <PHEV-ECU>
Using M.U.T.-III, carry out the MPI system actuator test (Refer to GROUP 54D – Troubleshooting, Actuator Test Reference Table).
- Item No.3: Radiator fan 1
- Item No.4: Radiator fan 2

Q: Is the check result normal?
YES : Go to Step 19.
NO : Repair the PHEV-ECU (Refer to GROUP 54D – Troubleshooting, Inspection Chart for Diagnosis Code). Then go to Step 20.

STEP 19. Check the symptoms.

Q: Does the radiator fan and condenser fan operate normal?
YES : It can be assumed that this malfunction is intermittent (Refer to GROUP 00 – How to Use Troubleshooting/Inspection Service Points, How to Cope with Intermittent Malfunction).
NO : Repair the PHEV-ECU (Refer to GROUP 54D – Troubleshooting, Inspection Chart for Diagnosis Code). Then go to Step 20.

STEP 20. Check the symptoms.

Q: Does the radiator fan and condenser fan operate normal?
YES : The procedure is complete.
NO : Return to Step 1.

<New>

Inspection Procedure 3: Radiator Fan and Condenser Fan do not Operate <4B1-PHEV>

OPERATION
The engine coolant temperature sensor senses engine coolant temperature. The oil thermistor senses cooling oil temperature. The A/C control panel (A/C-ECU) determines whether the A/C switch is turned on or off. The PHEV-ECU controls the radiator and the condenser fan according to these signals.

TECHNICAL DESCRIPTION
- If the radiator fan or the condenser fan does not run, a fault may occur in wiring harness wires/ connectors, the fusible links, the relay, the fan motor or the PHEV-ECU.
- Alternatively, if a fault occurs in the CAN bus line, the plug-in hybrid EV system, the engine-ECU or the A/C system, the cooling fan may not run.

PROBABLE CAUSES
- Malfunction of CAN bus system.
- Defective plug-in hybrid EV system
- Malfunction of A/C control panel (A/C-ECU)
- Damaged harness or connector.
- Malfunction of fusible link SBF1.
- Malfunction of fusible link SBF4.
- Malfunction of water temperature sensor
- Malfunction of radiator fan relay.
- Malfunction of condenser fan relay.
- Malfunction of fan control relay.
- Malfunction of radiator fan motor.
- Malfunction of condenser fan motor.
- Malfunction of PHEV-ECU

DIAGNOSIS PROCEDURE

⚠ CAUTION
- **If there is any problem in the CAN bus lines, an incorrect diagnosis code may be stored. Prior to this diagnosis, diagnose the CAN bus lines.**
- **Before replacing the ECU, ensure that the CAN bus lines is normal.**

STEP 1. Check the CAN bus system diagnosis.
Using M.U.T.-III, perform CAN bus diagnosis (Refer to GROUP 54C – Explanation About The M.U.T-III CAN Bus Diagnostics).

Q: Is the check result satisfactory?
YES : Go to Step 2.
NO : Repair the CAN bus lines (Refer to GROUP 54C – Troubleshooting, CAN Bus Diagnostic Table). Then go to Step 22.

STEP 2. Actuator test. <PHEV-ECU>
Using M.U.T.-III, carry out the MPI system actuator test (Refer to GROUP 54D – Troubleshooting, Actuator Test Reference Table).
- Item No.3: Radiator fan 1
- Item No.4: Radiator fan 2

Q: Is the check result normal?
YES : Go to Step 22.
NO : Go to Step 3.

STEP 3. Check the diagnosis code. <PHEV-ECU>
Using M.U.T.-III, check PHEV-ECU diagnosis code (Refer to GROUP 54D – Troubleshooting, Diagnosis Function).

Q: Is any diagnosis code stored?
YES : Repair the PHEV-ECU system (Refer to GROUP 54D – Troubleshooting, Inspection Chart for Diagnosis Code). Then go to Step 22.
NO : Go to Step 4.

STEP 4. Check the diagnosis code. <A/C control panel (A/C-ECU)>
Using M.U.T.-III, check A/C control panel (A/C-ECU) diagnosis code (Refer to GROUP 55 – Troubleshooting, Diagnosis Function <PHEV>).

Q: Is any diagnosis code stored?
YES : Repair the A/C control panel (A/C-ECU) system. (Refer to GROUP 55 – Troubleshooting, Inspection Chart for Diagnosis Code <PHEV>). Then go to Step 22.
NO : Go to Step 5.

STEP 5. Check the radiator fan relay, the condenser fan relay, and the fan control relay.

Q: Is the check result normal?
YES : Go to Step 6.
NO : Replace the damaged radiator fan relay (Refer to). Then go to Step 22.

STEP 6. Check the fan control relay.
Refer to .

Q: Is the check result normal?
YES : Go to Step 7.
NO : Replace the damaged fan control relay. Then go to Step 22.

STEP 7. Check the radiator fan motor and the condenser fan motor.

Q: Is the check result normal?
YES : Go to Step 8.
NO : Replace the damaged fan motor. Then go to Step 22.

STEP 8. Check of short to power supply, short to earth, open circuit and harness damage in power supply line between fusible link (SBF4) and radiator fan relay connector.

Q: Is the check result normal?
YES : Go to Step 9.
NO : Repair the connector(s) or wiring harness. Then go to Step 22.

STEP 9. Check of short to power supply, short to earth, open circuit and harness damage in power supply line between fusible link (SBF1) and cooling condenser fan relay connector.

Q: Is the check result normal?
YES : Go to Step 10.
NO : Repair the connector(s) or wiring harness. Then go to Step 22.

STEP 10. Check of short to power supply, short to earth, open circuit and harness damage in power supply line between fusible link (SBF1) and cooling fan control relay connector.

Q: Is the check result normal?
YES : Go to Step 11.
NO : Repair the connector(s) or wiring harness. Then go to Step 22.

STEP 11. Check of short to power supply, short to earth, open circuit and harness damage in power supply line between radiator fan relay connector and radiator fan motor connector.

Q: Is the check result normal?
YES : Go to Step 12.
NO : Repair the connector(s) or wiring harness. Then go to Step 22.

STEP 12. Check of short to power supply, short to earth, open circuit and harness damage in power supply line between radiator fan motor connector and condenser fan control relay connector.

Q: Is the check result normal?
YES : Go to Step 13.
NO : Repair the connector(s) or wiring harness. Then go to Step 22.

STEP 13. Check of short to power supply, short to earth, open circuit and harness damage in power supply line between condenser fan relay connector and condenser fan motor connector.

Q: Is the check result normal?
YES : Go to Step 14.
NO : Repair the connector(s) or wiring harness. Then go to Step 22.

STEP 14. Check of short to power supply, short to earth, open circuit and harness damage in signal line between fan control relay connector and condenser fan relay connector.

Q: Is the check result normal?
YES : Go to Step 15.
NO : Repair the connector(s) or wiring harness. Then go to Step 22.

STEP 15. Check of short to power supply, short to earth, open circuit and harness damage in body earth line between fan control relay connector and body earth.

Q: Is the check result normal?
YES : Go to Step 16.
NO : Repair the connector(s) or wiring harness. Then go to Step 22.

STEP 16. Check of short to power supply, short to earth, open circuit and harness damage in body earth line between condenser fan motor connector and body earth.

Q: Is the check result normal?
YES : Go to Step 17.
NO : Repair the connector(s) or wiring harness. Then go to Step 22.

STEP 17. Check of short to power supply, short to earth, open circuit and harness damage in WTS, WTSE line between engine ECU connector and water temperature sensor connector

Q: Is the check result normal?
YES : Go to Step 18.
NO : Repair the connector(s) or wiring harness. Then go to Step 22.

STEP 18. Service data <engine ECU>

Using M.U.T.-III, check engine-ECU service data (Refer to GROUP 13E – Troubleshooting, Service data).

- Item No.6: water temperature sensor

Q: Is the check result normal?

YES : Go to Step 19.

NO : Replace the damaged water temperature sensor (Refer to <4B1-PHEV>). Then go to Step 22.

STEP 19. Check the fusible link SBF1 and SBF4

Q: Is the check result normal?

YES : Go to Step 20.

NO : Replace the damaged fusible link.Then go to Step 22.

STEP 20. Actuator test. <PHEV-ECU>

Using M.U.T.-III, carry out the MPI system actuator test (Refer to GROUP 54D – Troubleshooting, Actuator Test Reference Table).

- Item No.3: Radiator fan 1
- Item No.4: Radiator fan 2

Q: Is the check result normal?

YES : Go to Step 21.

NO : Repair the PHEV-ECU (Refer to GROUP 54D – Troubleshooting, Inspection Chart for Diagnosis Code). Then go to Step 22.

STEP 21. Check the symptoms.

Q: Does the radiator fan and condenser fan operate normal?

YES : It can be assumed that this malfunction is intermittent (Refer to GROUP 00 – How to Use Troubleshooting/Inspection Service Points, How to Cope with Intermittent Malfunction).

NO : Repair the PHEV-ECU (Refer to GROUP 54D – Troubleshooting, Inspection Chart for Diagnosis Code). Then go to Step 22.

STEP 22. Check the symptoms.

Q: Does the radiator fan and condenser fan operate normal?

YES : The procedure is complete.

NO : Return to Step 1.

<Old>

COOLING FAN CONTROLLER INSPECTION <4B1-PHEV>

M1141007500024

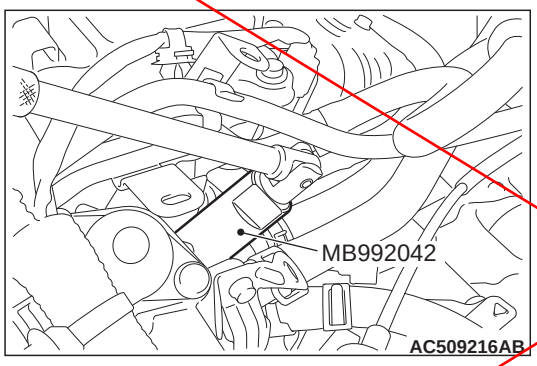

1. Use the coolant temperature sensor wrench (MB992041) to remove the coolant temperature sensor.
2. Connect the removed sensor to the vehicle wiring harness wire, and then immerse the sensor into hot water.
3. Disconnect the cooling fan motor connector.
4. Turn off the air conditioner to make the READY (ready to drive) indicator illuminate.
5. Heat or cool the water where the coolant temperature sensor has been immersed while the water temperature does not reach 80°C.
6. When the voltage is measured between the connector terminals at the cooling fan controller side, the measured valued should alternate among (1), (2) and (3) as below: (Check both of the controllers 1 and 2)
   (1) 0V
   (2) 6.8 ± 2.6 V
   (3) Battery voltage: ±2.6 V

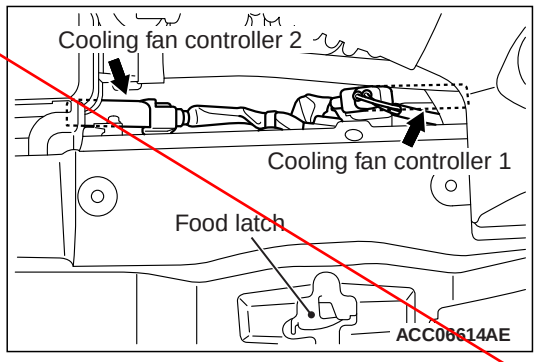

7. Replace a defective cooling fan controller. (For how to install, refer to)

<New>

COOLING FAN RELAY CONTINUITY CHECK <4B1-PHEV>

M1141006201971

FAN CONTROL CHECK

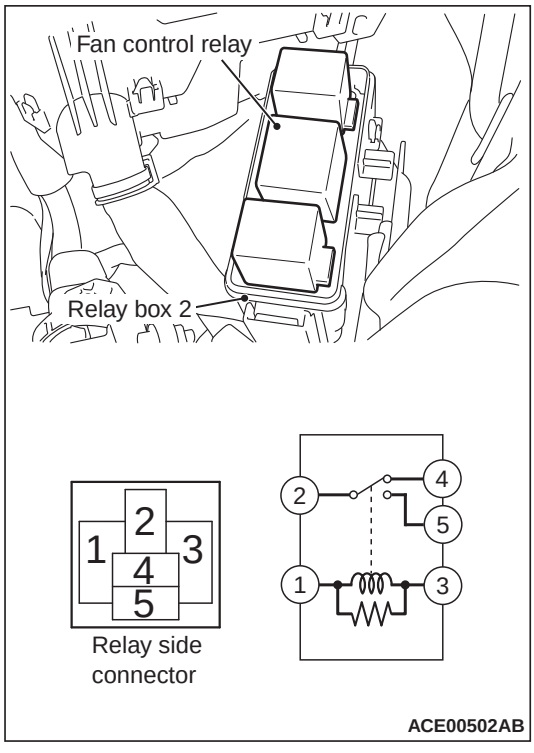

Battery voltage	Terminal No. to be connected to tester	Continuity test results
Not applied	2 – 4	Continuity (Less than 2 Ω)
	2 – 5	Open circuit
Connect terminal No. 3 and battery (+) terminal. Connect terminal No. 1 and battery (–) terminal.	2 – 4	Open circuit
	2 – 5	Continuity (Less than 2 Ω)

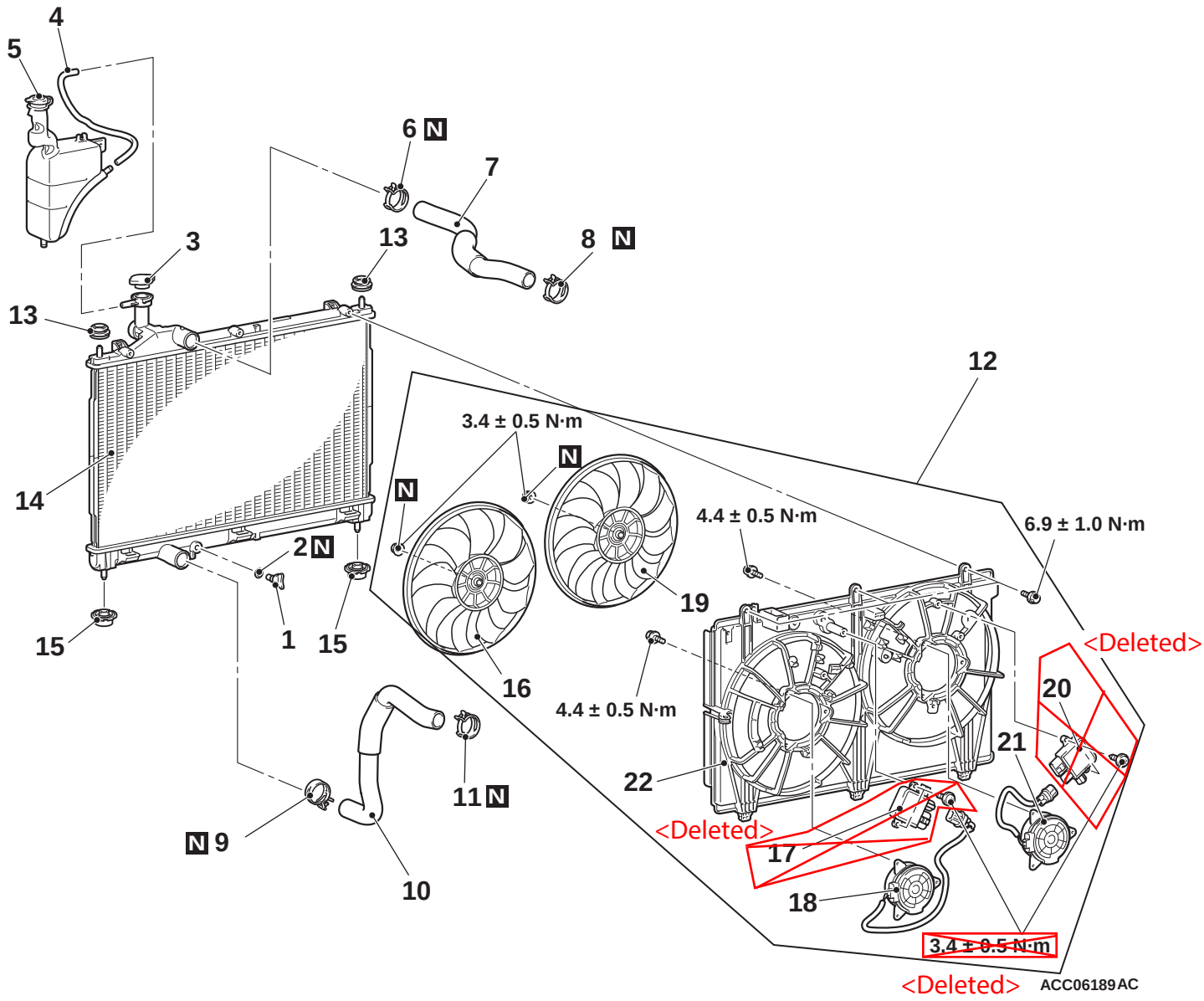

Removal steps

1. Radiator drain plug
2. O-ring
3. Radiator cap
4. Radiator condenser tank hose
5. Radiator condenser tank

<<A>> >>A<<
6. Hose clip

<<A>> >>A<<
7. Radiator upper hose

<<A>> >>A<<
8. Hose clip

<<A>> >>A<<
9. Hose clip

<<A>> >>A<<
10. Radiator lower hose

<<A>> >>A<<
11. Hose clip

- Radiator fan motor connector connection
- Condenser fan motor connector connection

12. Fan, fan motor and fan shroud assembly

Removal steps (Continued)

- Front end upper bar assembly (Refer to GROUP 42A – Loose Panel)

13. Support upper insulator

- Condenser assembly (Refer to GROUP 55 – Condenser Assembly)

14. Radiator assembly
15. Support lower insulator
16. Radiator fan

<Deleted> 17. ~~Cooling fan controller~~

18. Radiator fan motor
19. Condenser fan

<Deleted> 20. ~~Cooling fan controller~~

21. Condenser fan motor
22. Fan shroud

Name	Symbol	Name	Symbol
Brake electric vacuum pump control relay 2	C	Horn relay	B
Brake electric vacuum pump main relay	C	IGCT control relay	A
Condenser fan relay	D	Quick charging contactor (N) drive relay	A
Daytime running lamp relay	B	Quick charging contactor (P) drive relay	A
Dead lock relay <RHD>	E	Radiator fan relay	D
Electrical parking relay	A	Security alarm horn relay <Vehicles without security alarm sensor>	B
Engine control relay	B	Throttle valve control servo relay	B
EV control relay	A	Water/oil pump relay	A
Front fog lamp relay	B	Wiper deicer relay	B
Headlamp relay (HI)	B		

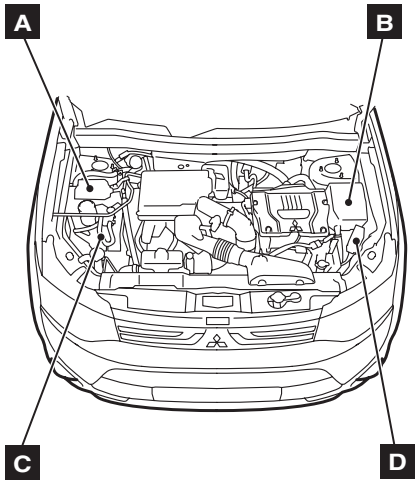

ACC06447AG

<LHD>

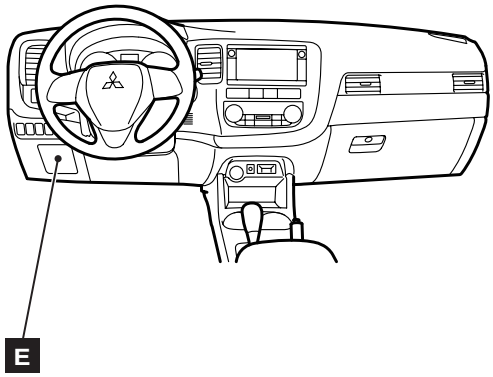

<RHD>

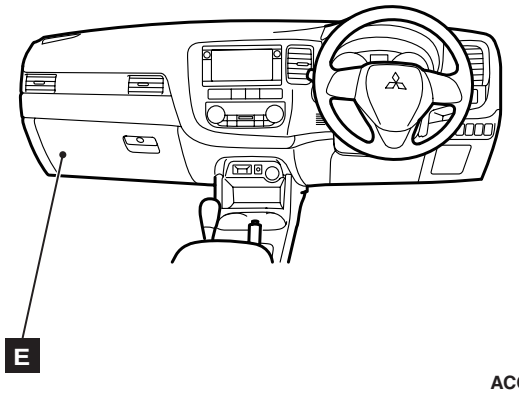

ACC02100AH

<Added>

Fan control relay	D

A

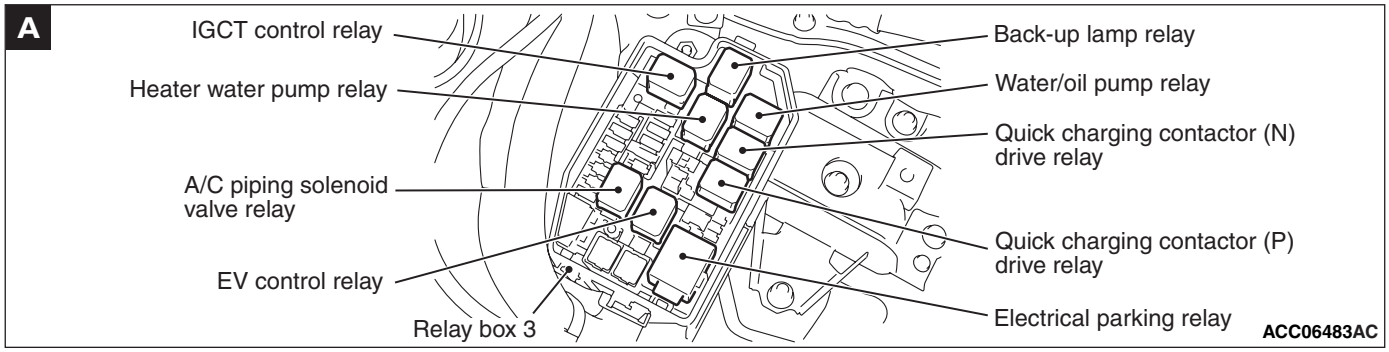

B

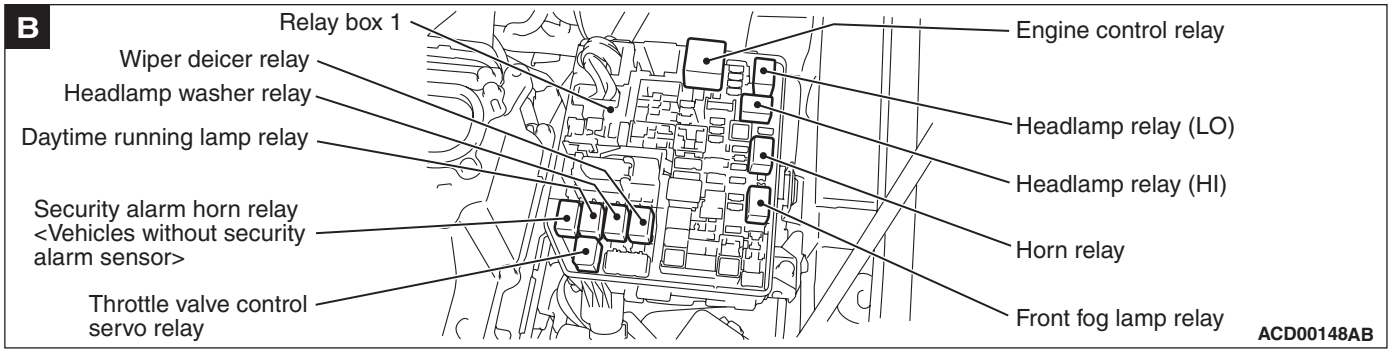

<Old>

C

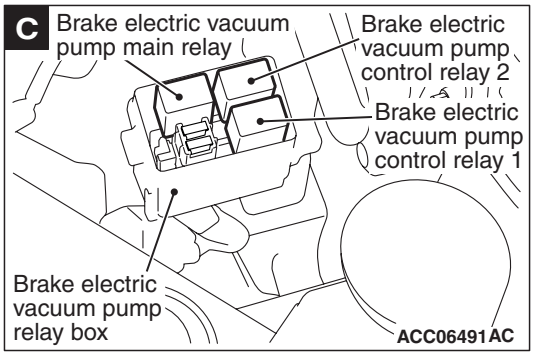

D

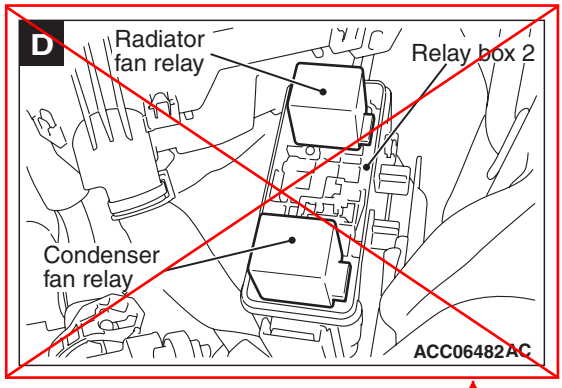

E <LHD>

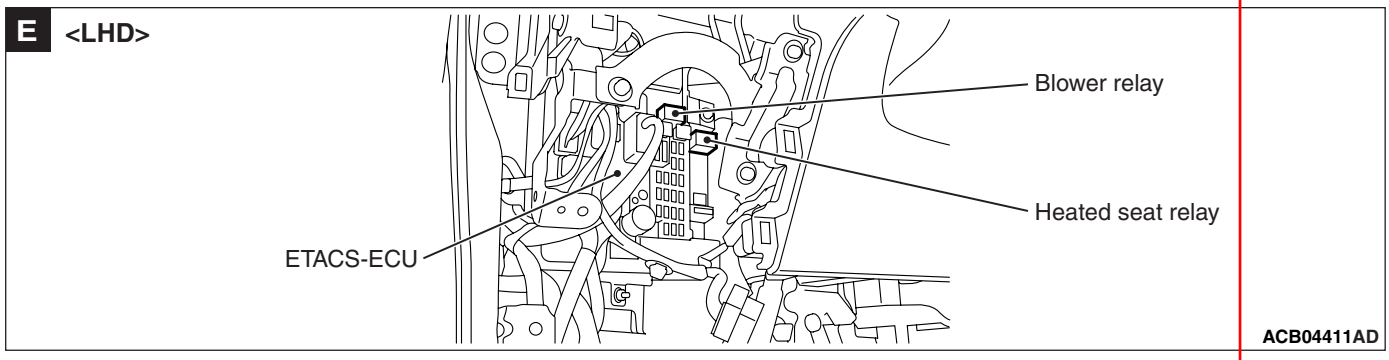

<New>

D

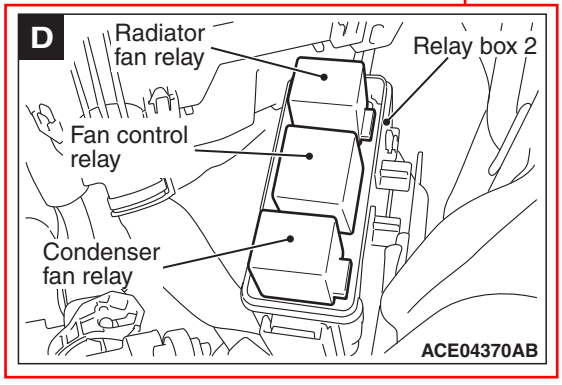

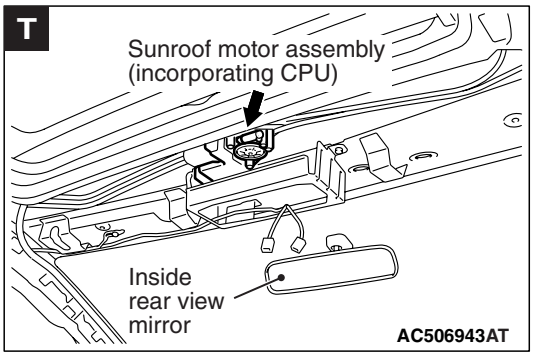

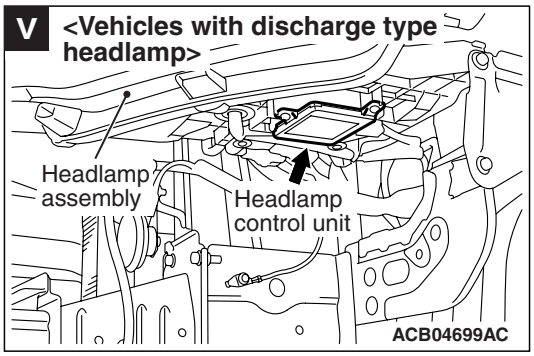

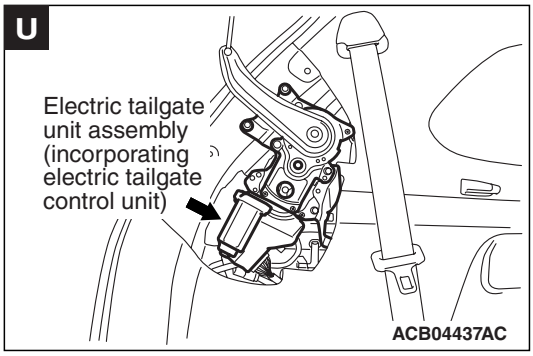

ECU <PHEV>

M1701000502221

Name	Symbol	Name	Symbol
ACC/FCM-ECU	E	EV remote-ECU	Y <Deleted>
A/C compressor	D	~~Fan controller 1 and 2~~	~~C~~
Acoustic vehicle alerting-ECU	N	Hands free-ECU	R
ASC-ECU	A	Hazard indicator assembly (incorporating CPU)	I
BMU	Z	Headlamp control unit <Vehicles with discharge type headlamp>	W
CAN box unit <Vehicles with MMCS>	J	Heater controller assembly (A/C-ECU)	I
CMU 1 to 5 and 7 to 11	b	KOS-ECU	K
Column switch (incorporating column-ECU)	G	LDW-ECU	T
Combination meter (incorporating CPU)	H	ON board charger/DC-DC converter	a
Corner sensor/back sensor-ECU <Vehicles with reversing sensor system>	P	OSS-ECU	K
Electrical parking driver unit	N	PHEV-ECU	L
Electric heater	X	Power drive unit	B
Electric tailgate unit assembly (incorporating electric tailgate control unit)	V	Power window main switch (incorporating CPU)	S

Name	Symbol	Name	Symbol
Engine-ECU	F	REMCU	a
EPS-ECU	O	SRS-ECU	Q
ETACS-ECU	M	Sunroof motor assembly (incorporating CPU)	U

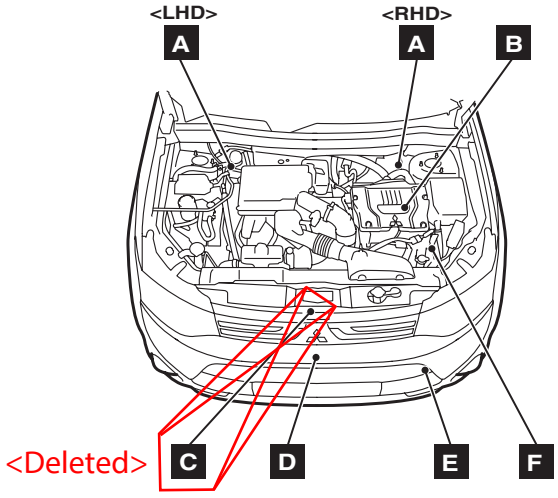

ACC06447AH

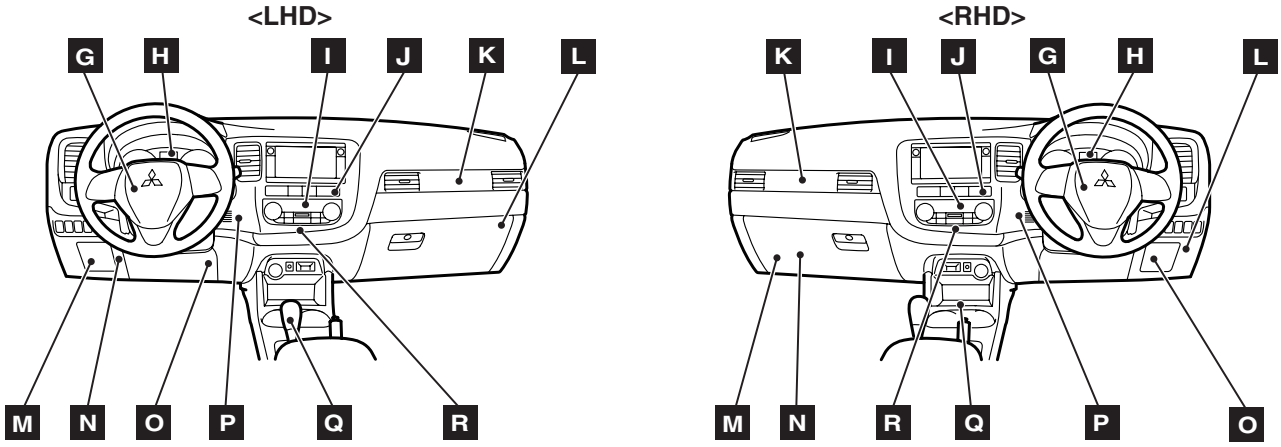

ACC02100AI

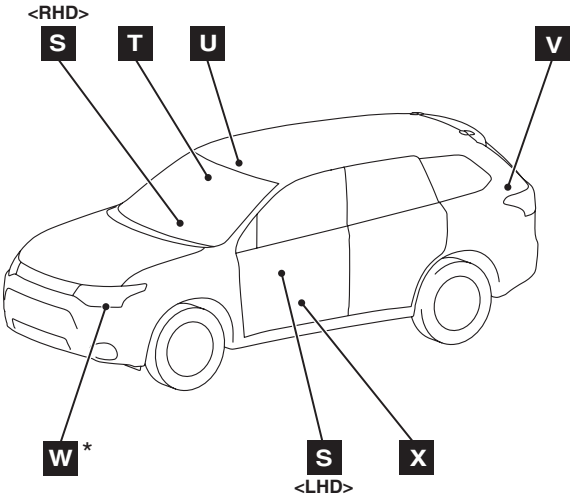

ACB04714AK

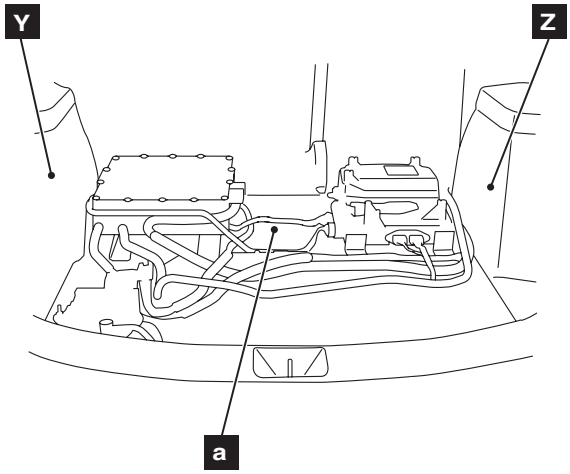

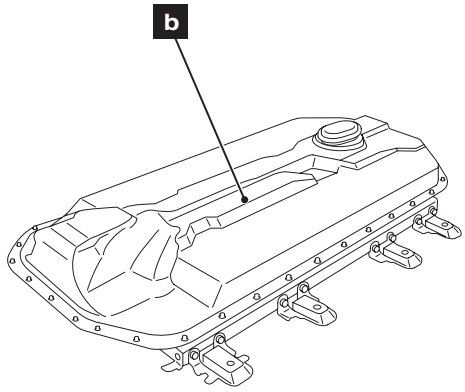

ACC07289AB

*NOTE: *: also equipped at right side.*

A <LHD>

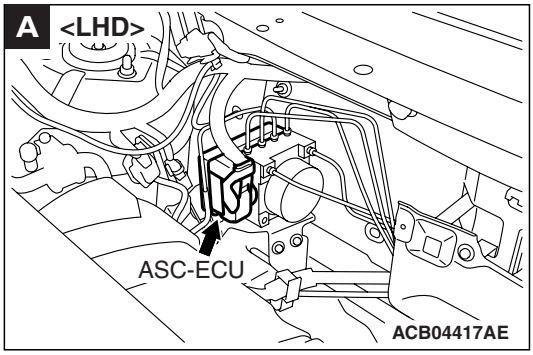

A <RHD>

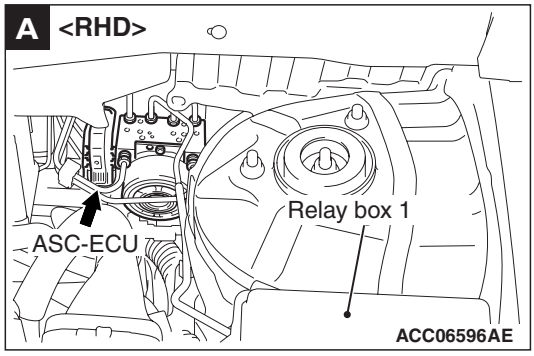

B

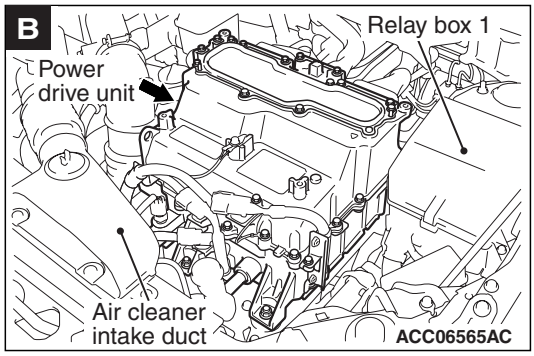

<Deleted>

C

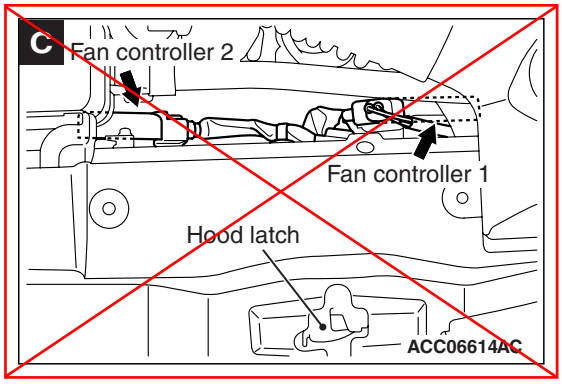

D

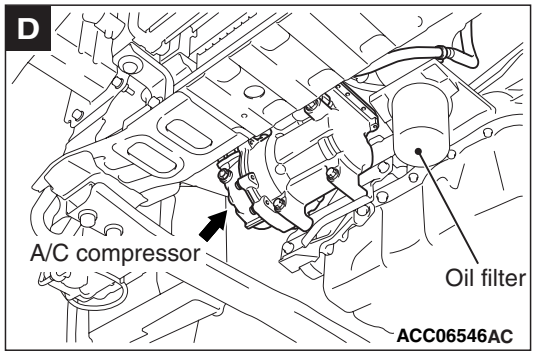

E

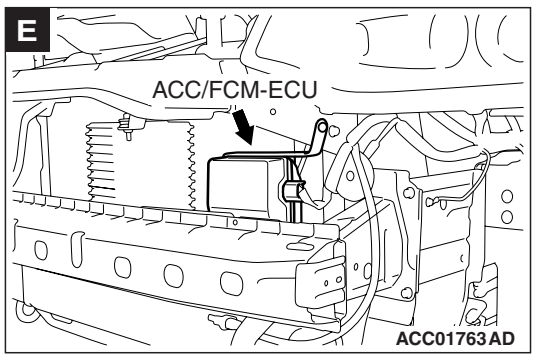

ENGINE COMPARTMENT <PHEV>

ENGINE COMPARTMENT <LHD>

M1801000309463

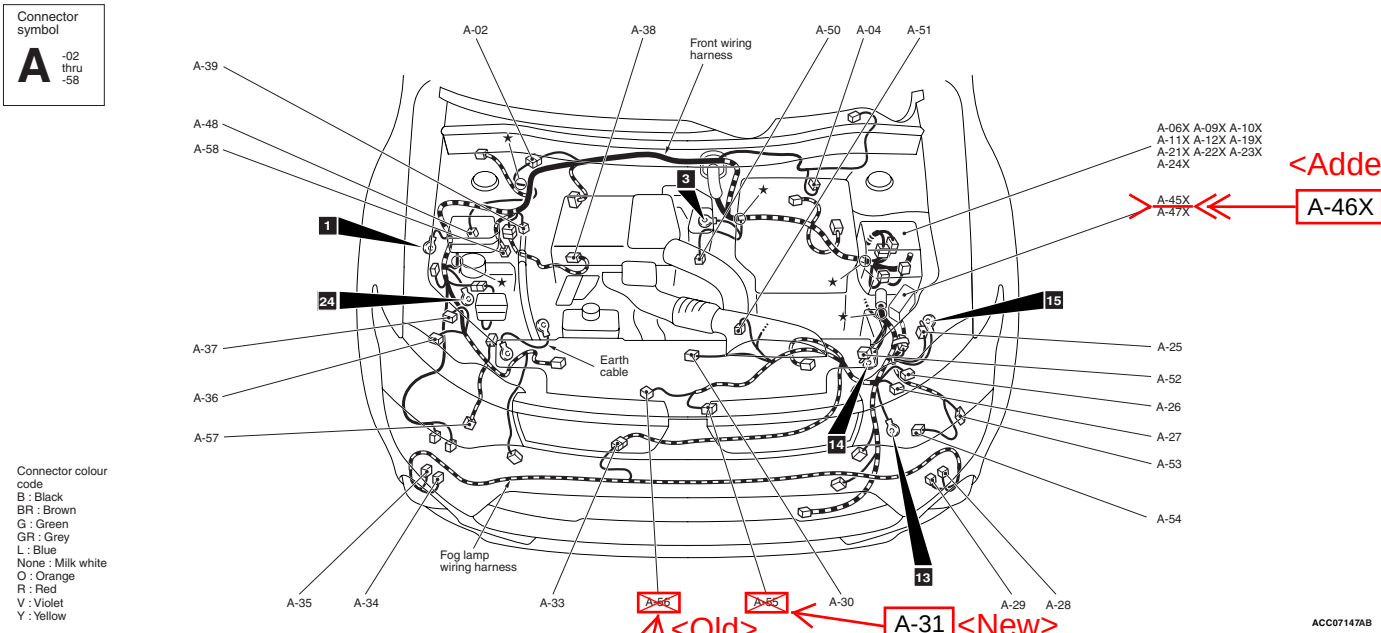

A-02 (4-B) Front wiring harness and security alarm sub wiring harness combination
A-04 (2-B) Brake fluid level switch
A-06X (4) Throttle valve control servo relay
A-09X (4) Security alarm horn relay
A-10X (4) Daytime running lamp relay
A-11X (4) Headlamp washer relay
A-12X (4) Wiper deicer relay
A-19X (4) Engine control relay
A-21X (4) Front fog lamp relay
A-22X (4) Horn relay
A-23X (4) Headlamp relay (HI)
A-24X (4) Headlamp relay (LO)
A-25 (6-GR) Earth J/C (front)
A-26 (8-B) Headlamp assembly (LH)
A-27 (6-GR) Headlamp assembly (LH)
A-28 (2-B) Front fog lamp (LH)
A-29 (2-GR) Daytime running lamp (RH)
A-30 (2-B) Hood latch switch
A-33 (4-B) Front wiring harness and fog lamp wiring harness combination

<Added>
A-31 (2-B) Condenser fan motor
A-32 (2-B) Radiator fan motor

A-32 <New>

A-34 (2-GR) Daytime running lamp (LH)
A-35 (2-B) Front fog lamp (RH)
A-36 (8-B) Headlamp assembly (RH)
A-37 (6-GR) Headlamp assembly (RH)
A-38 (3-B) Front height sensor <Vehicles with headlamp automatic levelling system>
A-39 (2-B) Front wheel speed sensor (RH)
A-45X (4) Condenser fan relay
A-47X (4) Radiator fan relay
A-48 (1-B) Security alarm horn
A-50 (3-B) Heater water pump
A-51 (2-B) EV coolant temperature sensor
A-52 (6-GR) Earth J/C (front 1)
A-53 (2-B) Acoustic vehicle alerting speaker
A-54 (4-GR) Electric oil pump

<Deleted>
~~A-55 (3-GR) Fan controller 1~~
~~A-56 (3-GR) Fan controller 2~~

A-57 (4-B) Electric water pump
A-58 (2-B) A/C piping solenoid valve

<Added>
A-46X (5) Fan control relay

ENGINE COMPARTMENT <RHD>

M1801000309430

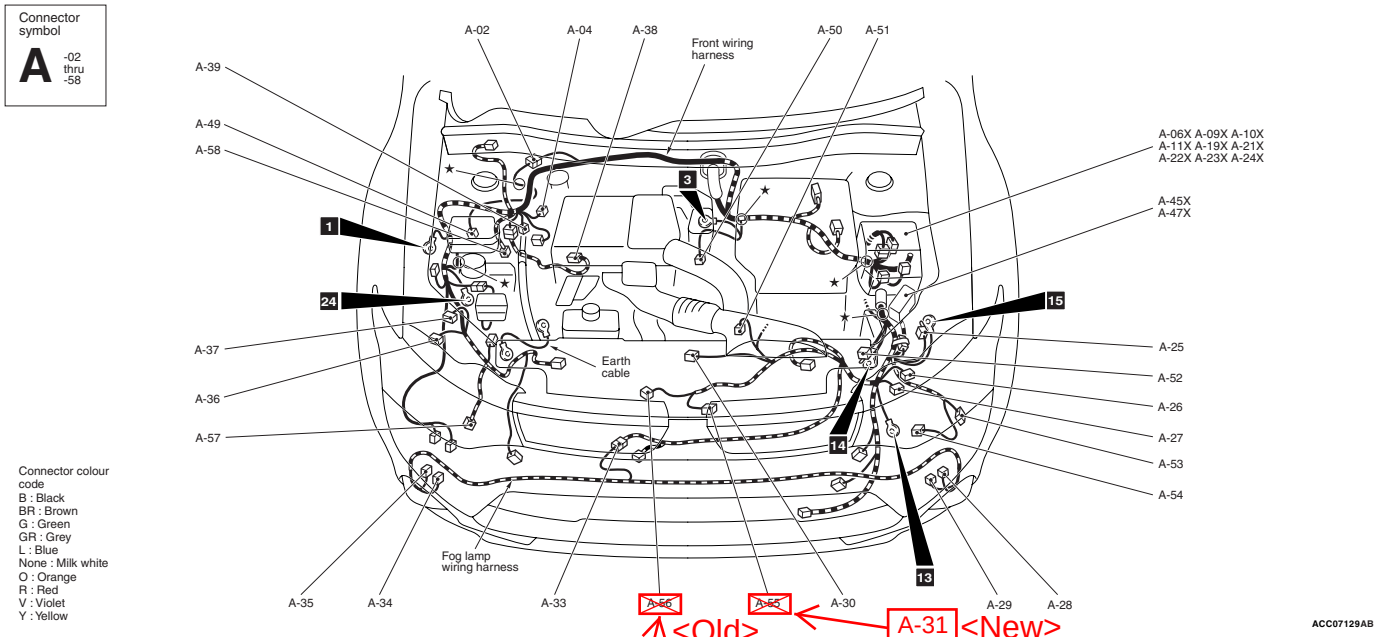

A-02 (4-B) Front wiring harness and security alarm sub wiring harness combination
A-04 (2-B) Brake fluid level switch
A-06X (4) Throttle valve control servo relay
A-09X (4) No connection
A-10X (4) Daytime running lamp relay
A-11X (4) Headlamp washer relay
A-19X (4) Engine control relay
A-21X (4) Front fog lamp relay
A-22X (4) Horn relay
A-23X (4) Headlamp relay (HI)
A-24X (4) Headlamp relay (LO)
A-25 (6-GR) Earth J/C (front)
A-26 (8-B) Headlamp assembly (LH)
A-27 (6-GR) Headlamp assembly (LH)
A-28 (2-B) Front fog lamp (LH)
A-29 (2-GR) Daytime running lamp (RH)
A-30 (2-B) Hood latch switch
A-33 (4-B) Front wiring harness and fog lamp wiring harness combination

A-31 (2-B) Condenser fan motor <Added>
A-32 (2-B) Radiator fan motor

A-32 <New>

<Old> A-31 <New>

A-34 (2-GR) Daytime running lamp (LH)
A-35 (2-B) Front fog lamp (RH)
A-36 (8-B) Headlamp assembly (RH)
A-37 (6-GR) Headlamp assembly (RH)
A-38 (3-B) Front height sensor <Vehicles with headlamp automatic levelling system>
A-39 (2-B) Front wheel speed sensor (RH)
A-45X (4) Condenser fan relay
A-47X (4) Radiator fan relay
A-49 (4-B) Security alarm siren
A-50 (3-B) Heater water pump
A-51 (2-B) EV coolant temperature sensor
A-52 (6-GR) Earth J/C (front 1)
A-53 (2-B) Acoustic vehicle alerting speaker
<Deleted>
~~A-54 (4-GR) Electric oil pump~~
~~A-55 (3-GR) Fan controller 1~~
A-56 (3-GR) Fan controller 2
A-57 (4-B) Electric water pump
A-58 (2-B) A/C piping solenoid valve

<Added>
A-46X (5) Fan control relay

Attached sheet 9(1/2)

CENTRALIZED RELAY

Connector No.	Name	Connector No.	Name
A-06X	Throttle valve control servo relay	A-130X	Brake electric vacuum pump main relay
A-09X	Security alarm horn relay <Vehicles without security alarm sensor>	A-131X	Brake electric vacuum pump control relay 1
A-10X	Daytime running lamp relay	A-132X	Brake electric vacuum pump control relay 2
A-11X	Headlamp washer relay	A-135X	Electrical parking relay
A-12X	Wiper deicer relay	A-137X	Quick charging contactor (P) drive relay
A-19X	Engine control relay	A-138X	Quick charging contactor (N) drive relay
A-21X	Front fog lamp relay	A-139X	Water/oil pump relay
A-22X	Horn relay	A-140X	EV control relay
A-23X	Headlamp relay (HI)	A-142X	Heater water pump relay
A-24X	Headlamp relay (LO)	A-143X	Back-up lamp relay
A-45X	Condenser fan relay	A-144X	A/C piping solenoid valve relay
A-47X	Radiator fan relay	A-145X	IGCT control relay

<Added>

A-46X	Fan control relay

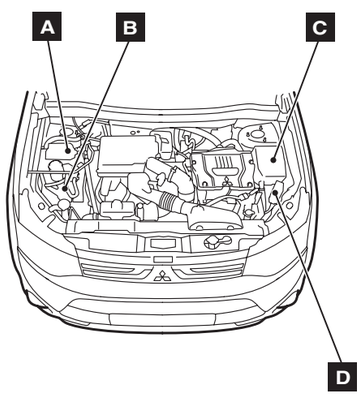

ACC07706AC

Attached sheet 9(2/2)

C RELAY BOX 1

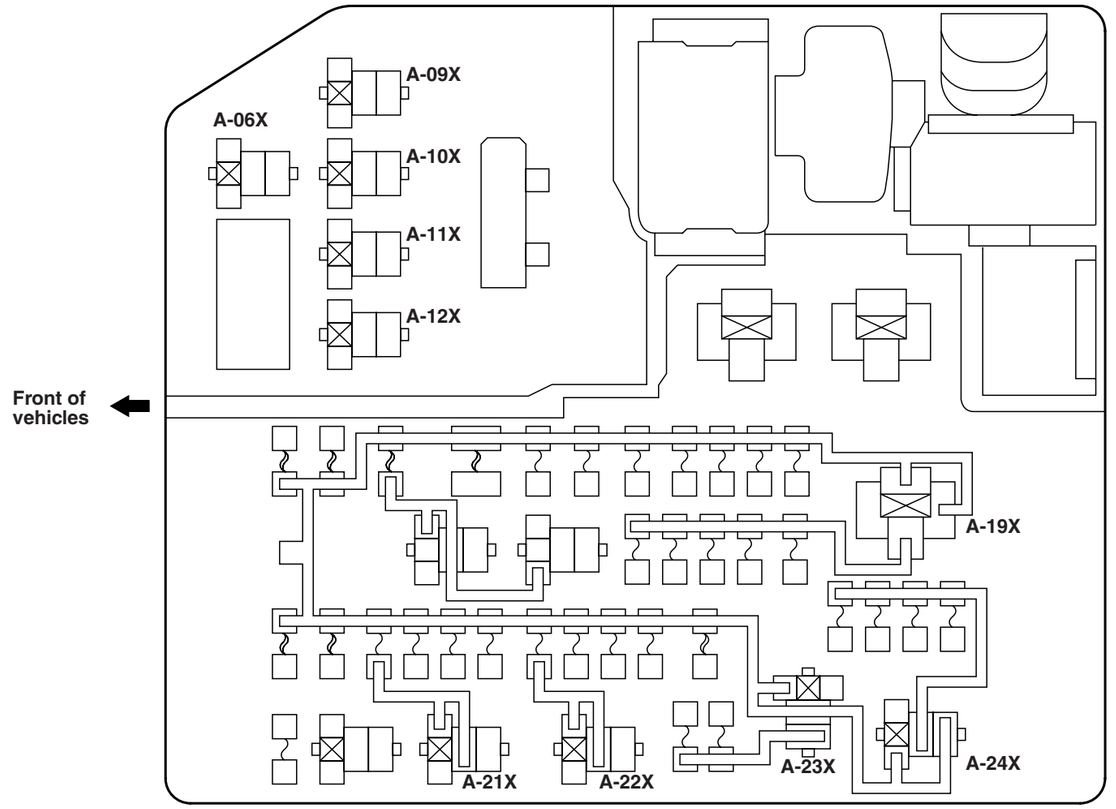

ACC06383AE

D RELAY BOX 2

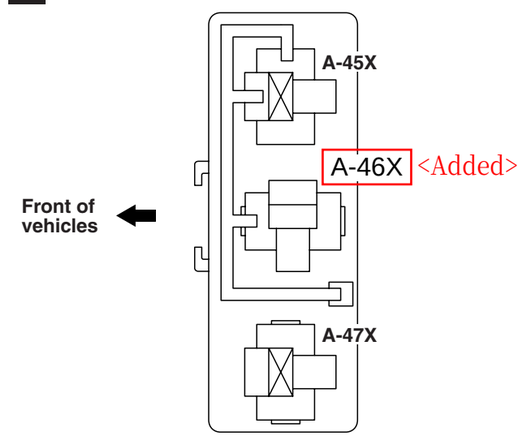

ACC06959AC

Attached sheet 10

DRIVE BATTERY COOLING SYSTEM (CONTINUED)

<Old>

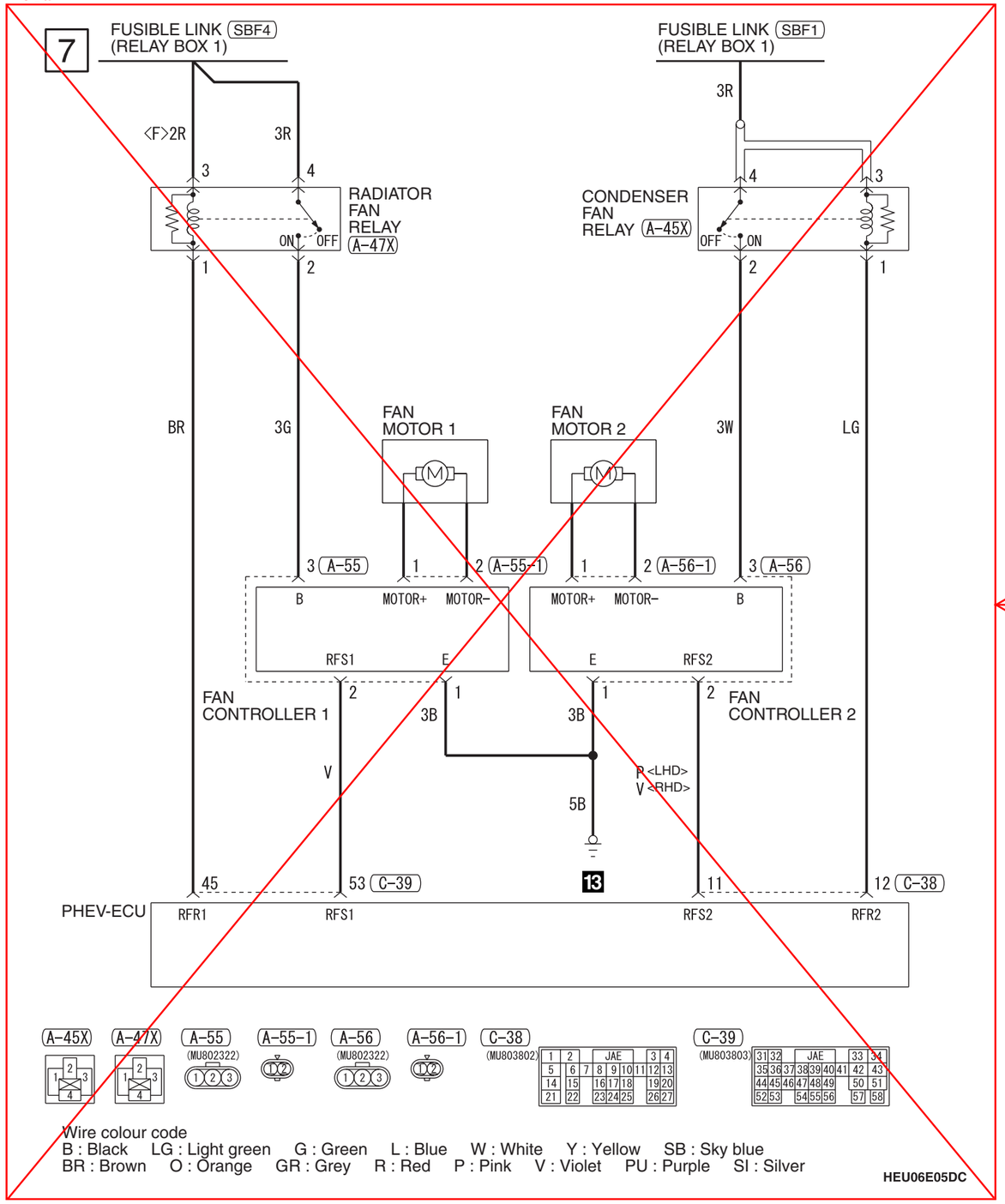

Wire colour code
B : Black LG : Light green G : Green L : Blue W : White Y : Yellow SB : Sky blue
BR : Brown O : Orange GR : Grey R : Red P : Pink V : Violet PU : Purple SI : Silver

HEU06E05DC

<New>

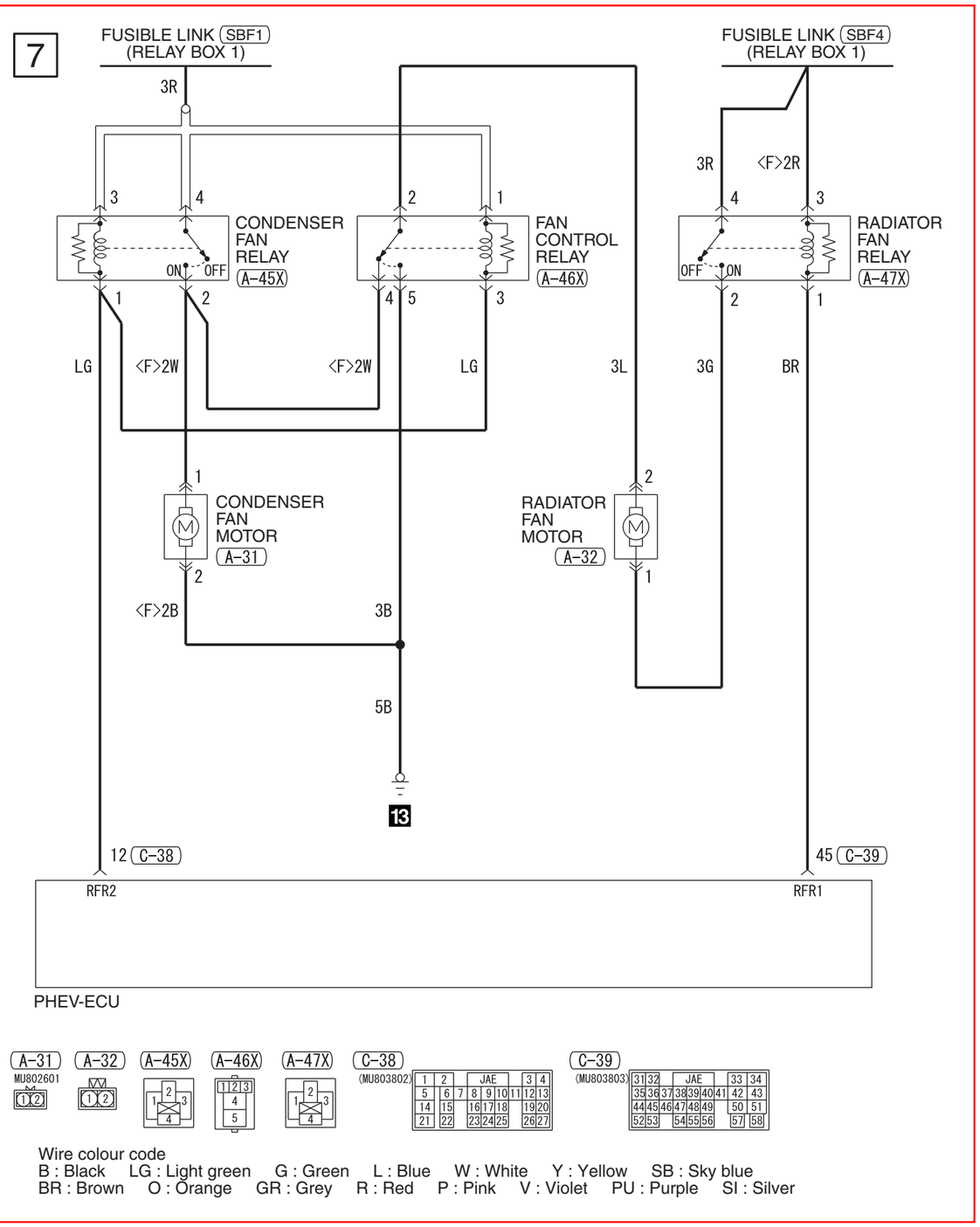

Wire colour code
B : Black LG : Light green G : Green L : Blue W : White Y : Yellow SB : Sky blue
BR : Brown O : Orange GR : Grey R : Red P : Pink V : Violet PU : Purple SI : Silver

Attached sheet 11(1/2)

EV COOLING SYSTEM

<Old>

M1901040200017

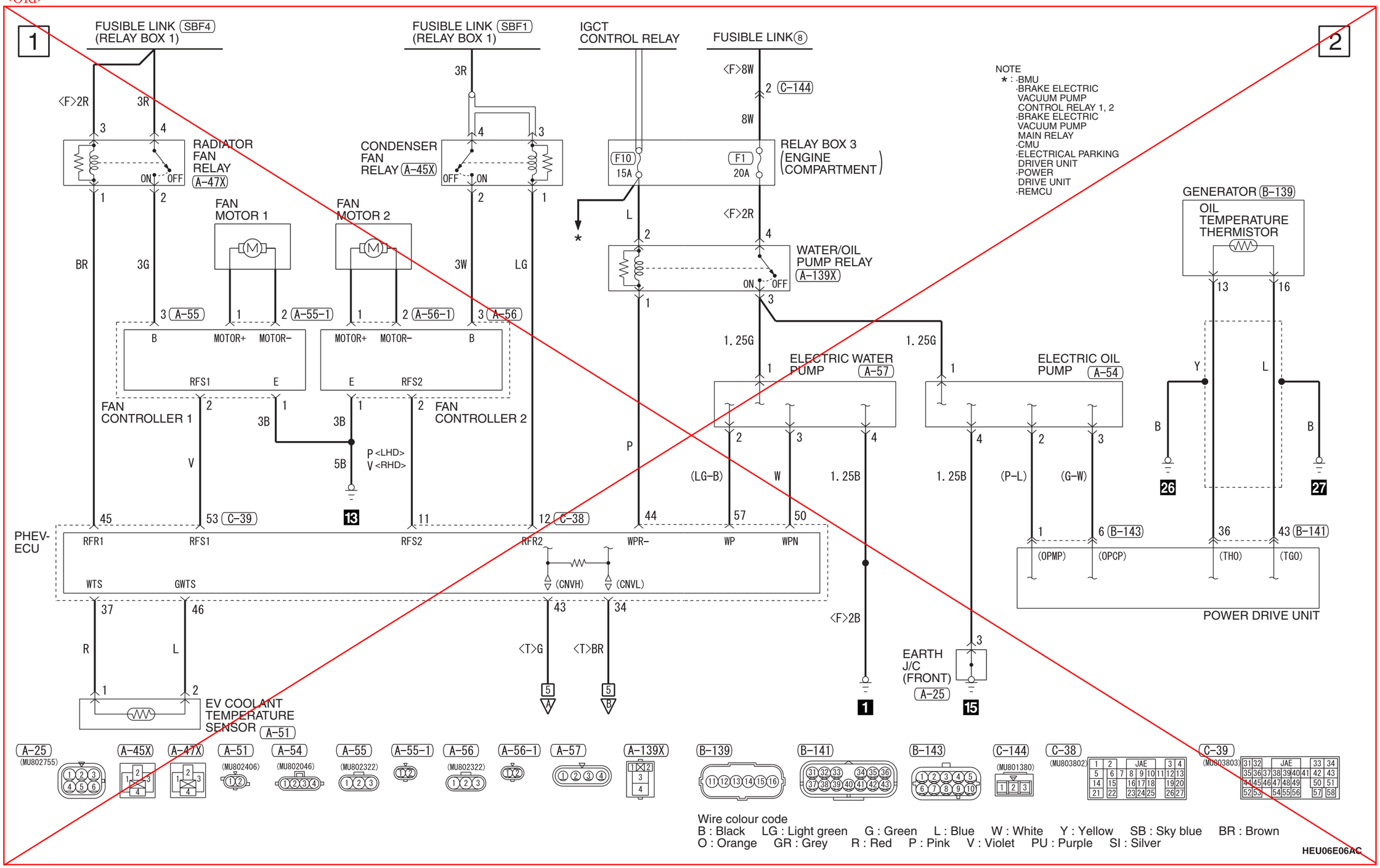

<New>

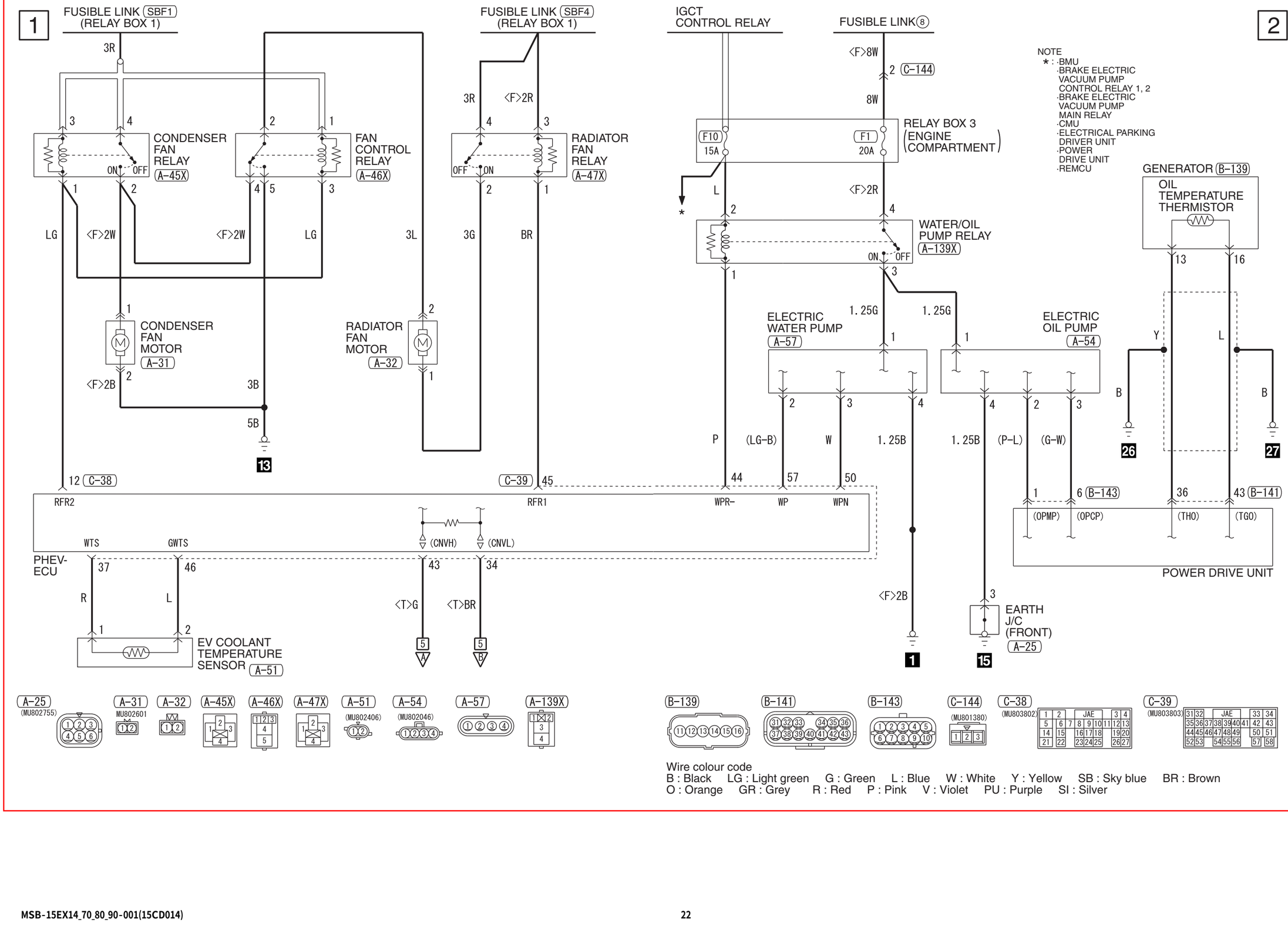
1
FUSIBLE LINK (SBF1)
(RELAY BOX 1)
3R
CONDENSER FAN RELAY (A-45X)
FAN CONTROL RELAY (A-46X)
ON OFF
LG
<F>2W
<F>2W
LG
3L
CONDENSER FAN MOTOR (A-31)
<F>2B
3B
5B
13
RADIATOR FAN MOTOR (A-32)
FUSIBLE LINK (SBF4)
(RELAY BOX 1)
3R
<F>2R
RADIATOR FAN RELAY (A-47X)
OFF ON
3G
BR
12 (C-38)
RFR2
C-39
45
RFR1
WTS
GWTS
PHEV-ECU
37
46
R
L
EV COOLANT TEMPERATURE SENSOR (A-51)
(CNVH)
(CNVL)
43
34
<T>G
<T>BR
IGCT CONTROL RELAY
FUSIBLE LINK 8
<F>8W
2 (C-144)
8W
F10 15A
F1 20A
RELAY BOX 3 (ENGINE COMPARTMENT)
L
<F>2R
WATER/OIL PUMP RELAY (A-139X)
ON OFF
1.25G
1.25G
ELECTRIC WATER PUMP (A-57)
ELECTRIC OIL PUMP (A-54)
P
(LG-B)
W
1.25B
1.25B
(P-L)
(G-W)
44
57
50
<F>2B
1
EARTH J/C (FRONT) (A-25)
15
NOTE
*: ·BMU
·BRAKE ELECTRIC VACUUM PUMP CONTROL RELAY 1, 2
·BRAKE ELECTRIC VACUUM PUMP MAIN RELAY
·CMU
·ELECTRICAL PARKING DRIVER UNIT
·POWER DRIVE UNIT
·REMCU
GENERATOR (B-139)
OIL TEMPERATURE THERMISTOR
13
16
Y
L
B
B
26
27
1
6 (B-143)
36
43 (B-141)
(OPMP)
(OPCP)
(THO)
(TGO)
POWER DRIVE UNIT
2
A-25 (MU802755)
A-31 MU802601
A-32
A-45X
A-46X
A-47X
A-51 (MU802406)
A-54 (MU802046)
A-57
A-139X
B-139
B-141
B-143
C-144 (MU801380)
C-38 (MU803802)
C-39 (MU803803)
JAE
Wire colour code
B : Black LG : Light green G : Green L : Blue W : White Y : Yellow SB : Sky blue BR : Brown
O : Orange GR : Grey R : Red P : Pink V : Violet PU : Purple SI : Silver

Attached sheet 12(1/2)

ENGINE COOLING SYSTEM

M1901001005813

<Old>

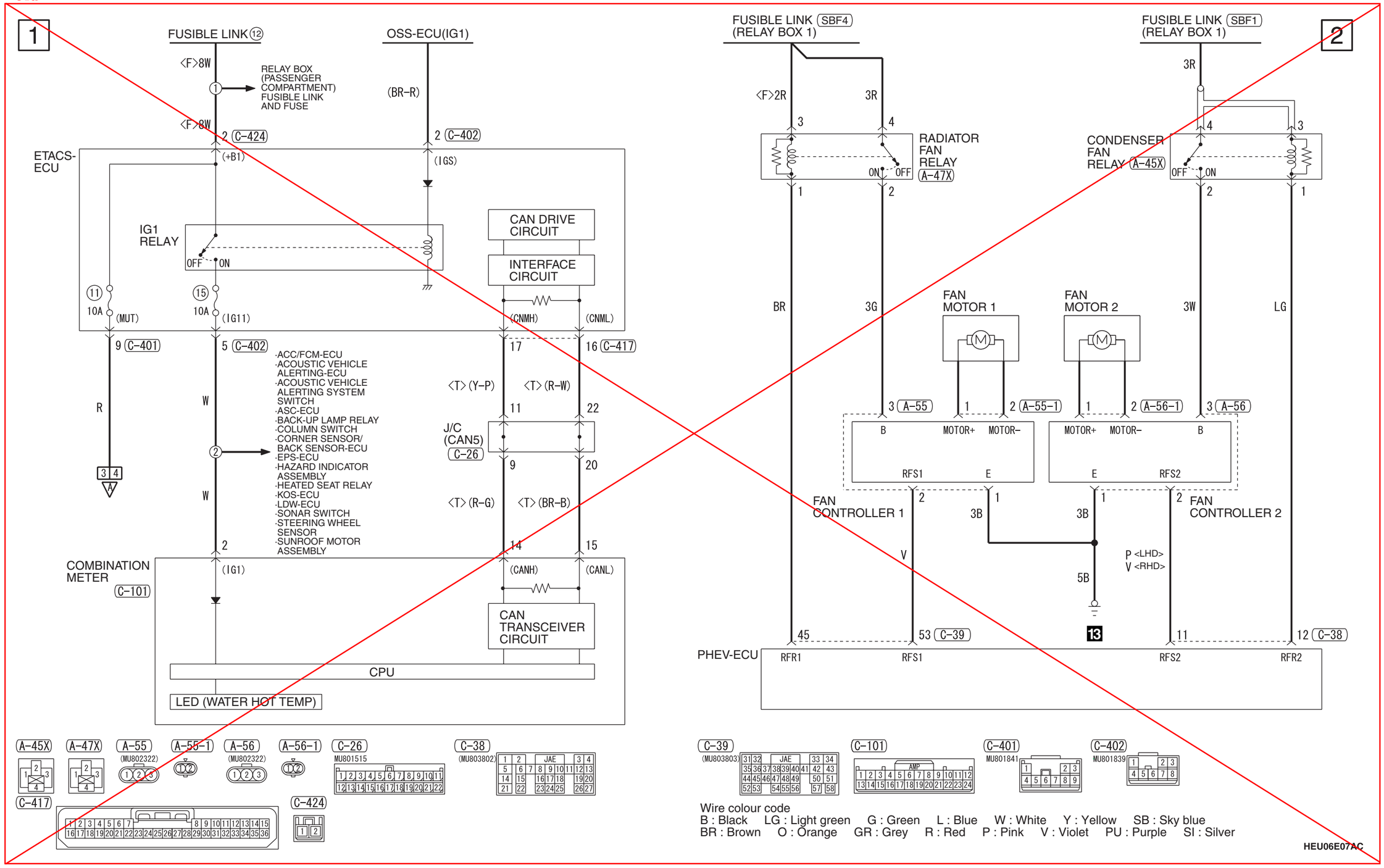

Wire colour code
B : Black LG : Light green G : Green L : Blue W : White Y : Yellow SB : Sky blue
BR : Brown O : Orange GR : Grey R : Red P : Pink V : Violet PU : Purple SI : Silver

HEU06E07AC

<New>

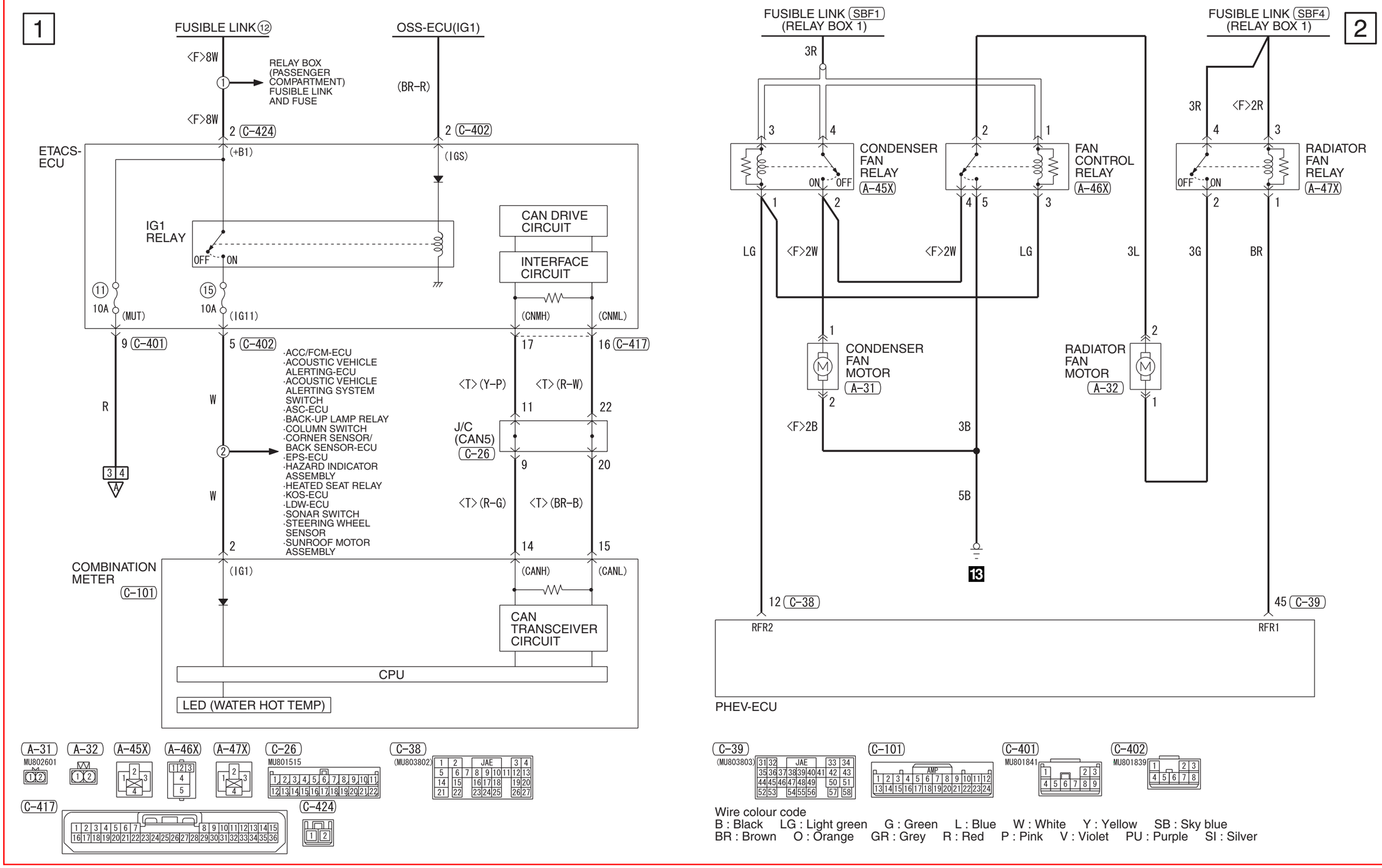

Wire colour code
B : Black LG : Light green G : Green L : Blue W : White Y : Yellow SB : Sky blue
BR : Brown O : Orange GR : Grey R : Red P : Pink V : Violet PU : Purple SI : Silver

Attached sheet 13(1/2)

AIR CONDITIONER (CONTINUED)

<Old>

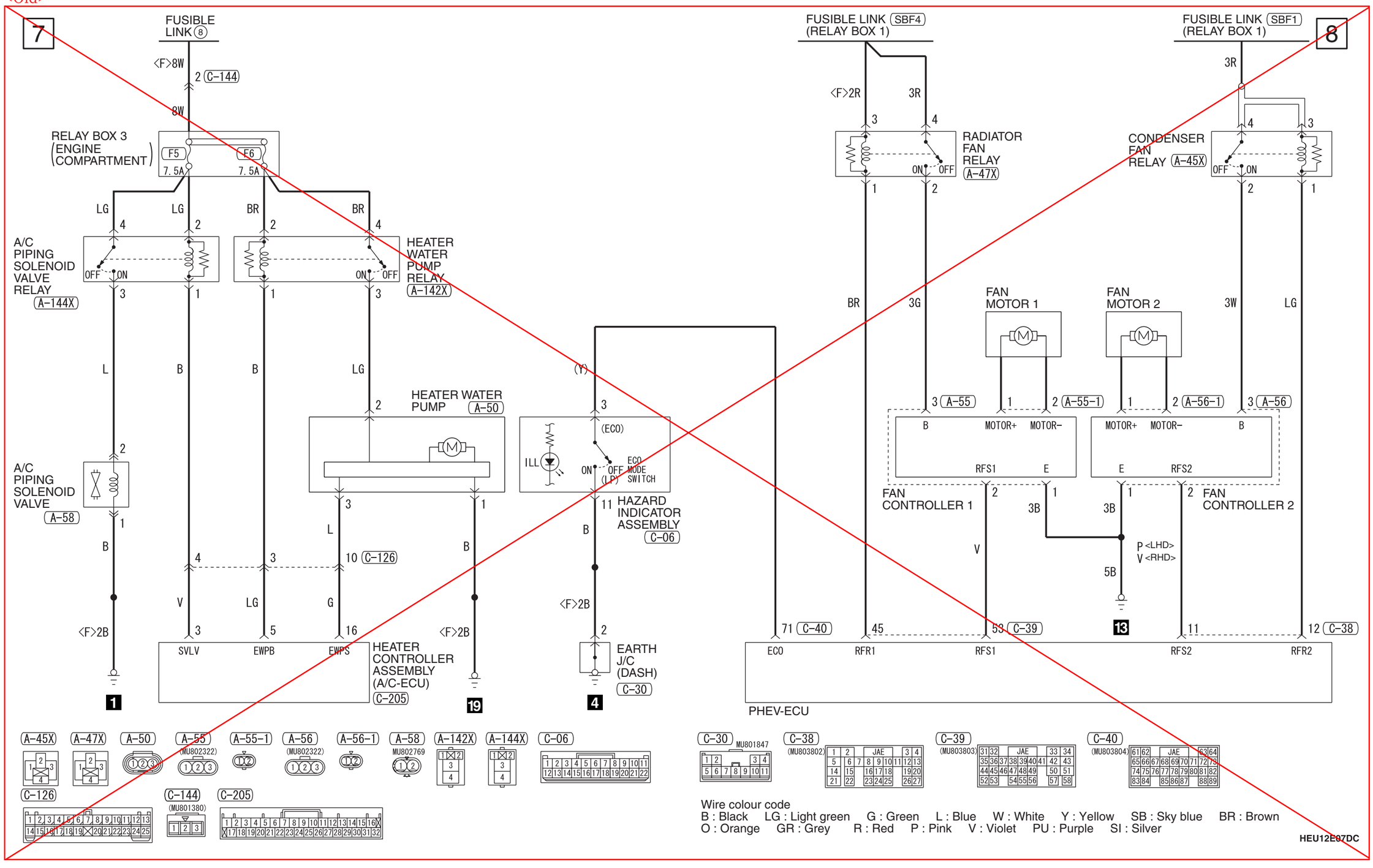

<New>

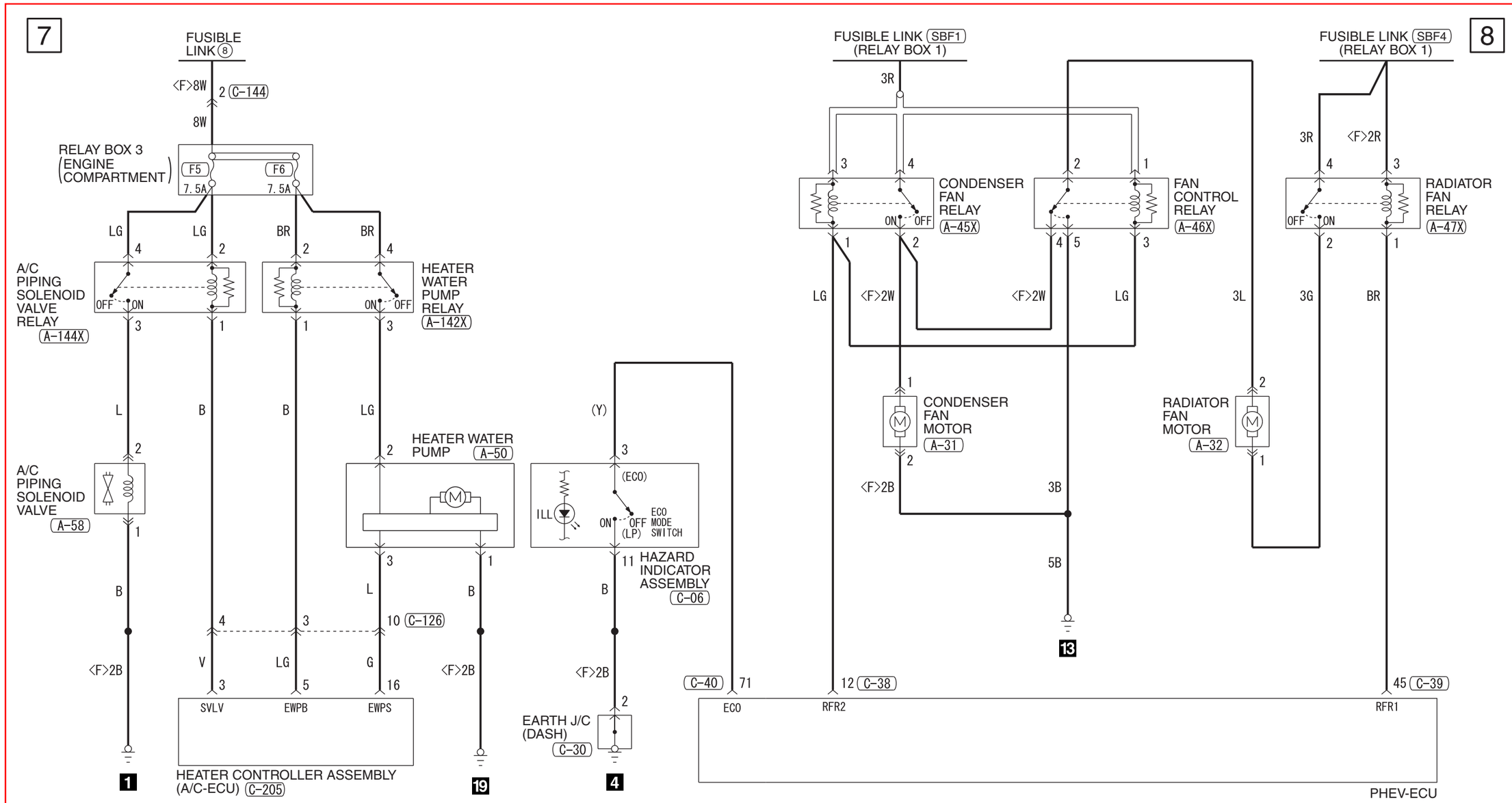

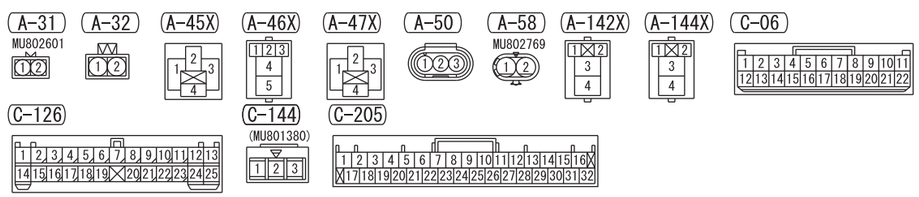

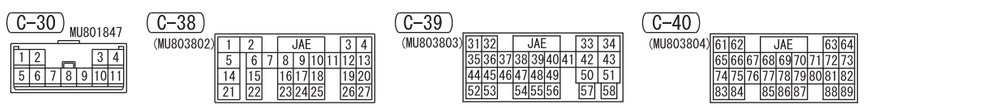

Wire colour code
B : Black LG : Light green G : Green L : Blue W : White Y : Yellow SB : Sky blue BR : Brown
O : Orange GR : Grey R : Red P : Pink V : Violet PU : Purple SI : Silver