MITSUBISHI MOTORS

SERVICE BULLETIN

GLOBAL AFTER SALES OFFICE, MITSUBISHI MOTORS CORPORATION

PURPOSE : CHANGE	ISSUE NO. : MSB-15EX51-001	DATE : 2015-12-10
SUBJECT : Changes and additions of the bolts in the front bumper assembly and radiator grill		<DESTINATION/MODEL> (EU/RUSSIA/G.EXP/GCC) <M/Y> 16
GROUP : Gr:51(Exterior)		LANCER(CY0A)/LANCER SPORTBACK(CX0A)

1. Description :

Please refer to the attached document for the information about the change of mention in the applicable service manual. Two bolts are changed to the pre-coat bolts with adhesive agent for slack ends. At the same time, these two bolts concerned are impossible to reuse. There is the compatibility of the old and the new bolt in the vehicles before 15 M/Y.

2. Affected service manuals :

<EU/RUSSIA>

Applicable manual	Pub. No.	Applicable title (INFO-ID)	Content
2016 LANCER/LANCER SPORTBACK Workshop Manual CD-ROM	CCAE16E1-CD(E) CCAF16E1-CD(F) CCAG16E1-CD(G) CCAS16E1-CD(S) CCAI16E1-CD(I)	FRONT BUMER ASSEMBLY AND RADIATOR GRILLE REMOVAL AND INSTALLATION (M511-02-541-18400-01)	Attached sheet 1

<GENERAL EXPORT/GCC>

Applicable manual	Pub. No.	Applicable title (INFO-ID)	Content
2016 LANCER Workshop Manual CD-ROM	PWME1510R(ENG) PWMS1511R8SPA)	FRONT BUMER ASSEMBLY AND RADIATOR GRILLE REMOVAL AND INSTALLATION (M511-02-541-17300-01)	Attached sheet 2

3. About the details :

Please refer to the attached document (Attached sheet 1-2)

4. Timing of implementation : From 16MY of the related vehicles

REMOVAL AND INSTALLATION

M1511025401184

Pre-removal Operation	Post-installation Operation
Engine Room Under Cover Front A Removal (Refer to).	• Engine Room Under Cover Front A Installation. (Refer to). • Front Fog Lamp Aiming Adjustment (Refer to GROUP 54A, Fog Lamp – On-vehicle Service).

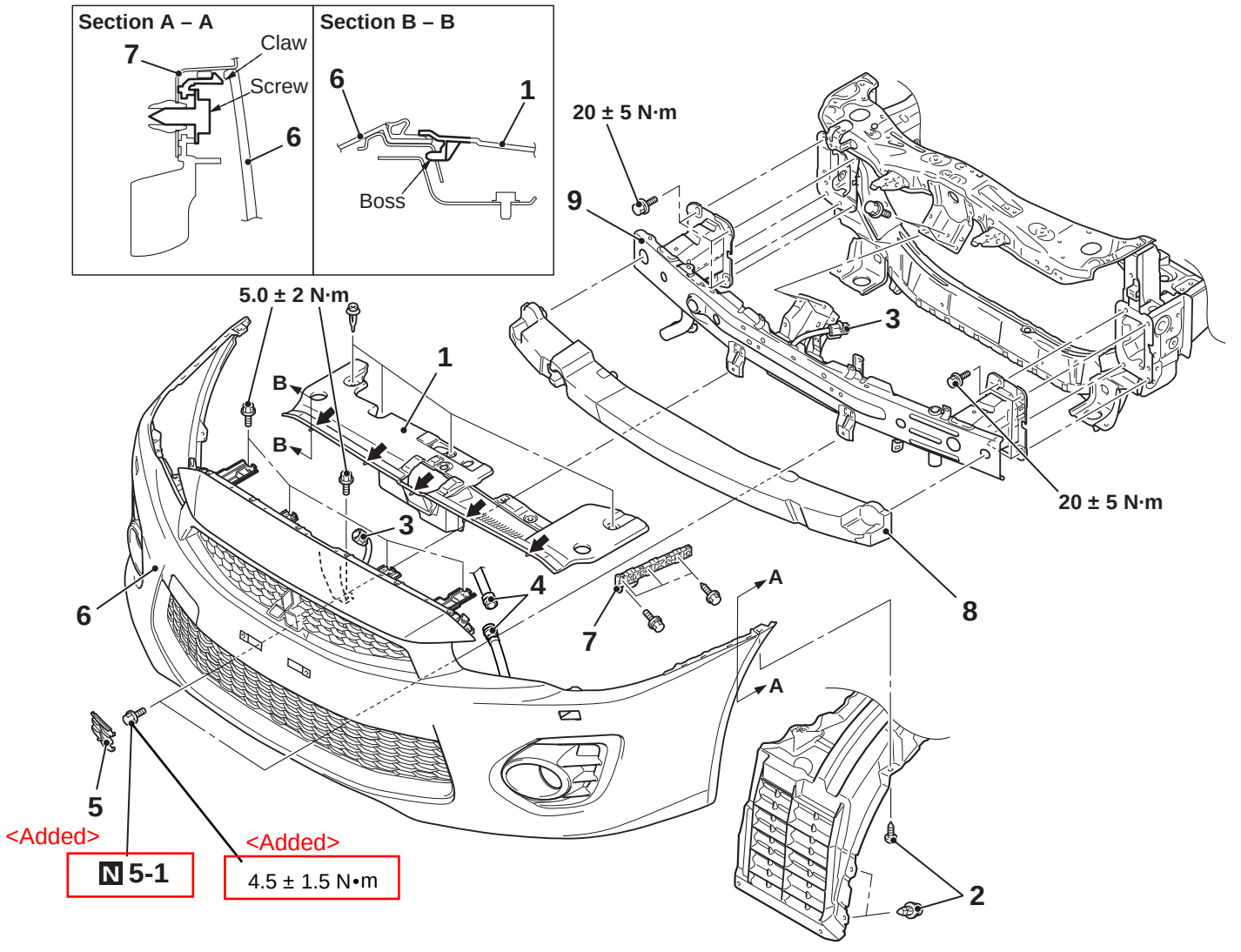

: Bosses (triangle marks indicating the boss locations are inscribed on the top surface)

ACF04763AB

Removal steps

- Air cleaner intake duct (Refer to GROUP 15, Air Cleaner <4A9>, <4B1, 4J1>)

1. Headlamp support panel cover
2. Splash shield mounting clips and screws
3. Fog lamp wiring harness connector connection
4. Headlamp washer hose connection <Vehicles with headlamp washer>
5. Front bumper grille cover

Removal steps (Continued)

<Added> 5-1. Bolts

6. Front bumper and radiator grille assembly
7. Front bumper side bracket
8. Front bumper core <Vehicles for Europe>
   - Horn (Refer to GROUP 54A, Horn)
   - Ambient temperature sensor (Refer to GROUP 55A, Ambient Temperature Sensor)
9. Front bumper reinforcement A

FRONT BUMPER ASSEMBLY AND RADIATOR GRILLE

REMOVAL AND INSTALLATION

M1511025401173

Pre-removal Operation	Post-installation Operation
• Engine Room Under Cover Front A Removal (Refer to).	• Engine Room Under Cover Front A Installation (Refer to). • Front Fog Lamp Aiming Adjustment (Refer to GROUP 54A, Fog Lamp – On-vehicle Service).

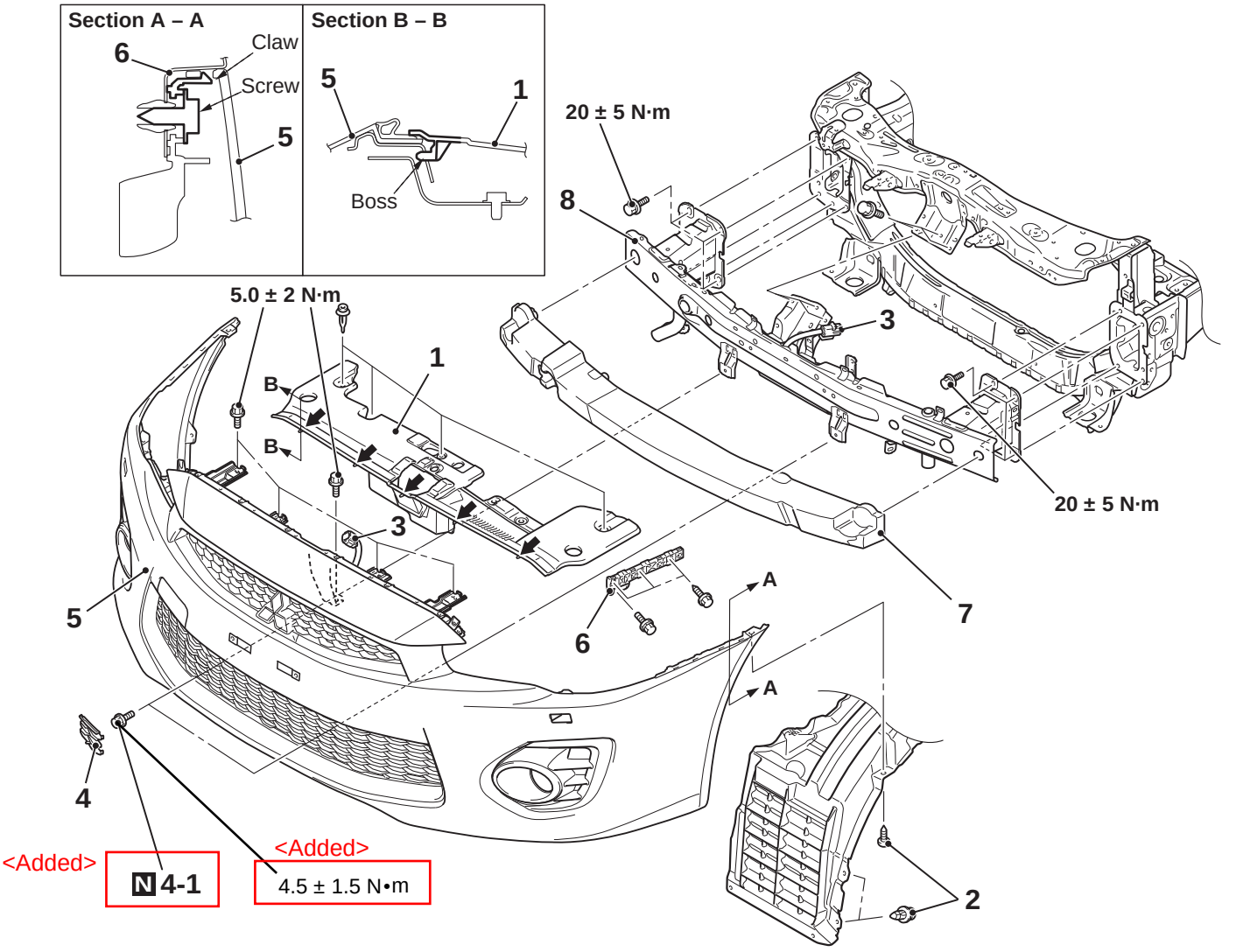

: Bosses (triangle marks indicating the boss locations are inscribed on the top surface)

ACF04764 AB

Removal steps

- Air cleaner intake duct (Refer to GROUP 15, Air Cleaner <4A9>, <4B1>)

1. Headlamp support panel cover
2. Splash shield mounting clips and screws
3. Fog lamp wiring harness connector connection
4. Front bumper grille cover

<Added> 4-1. Bolts

Removal steps (Continued)

5. Front bumper and radiator grille assembly
6. Front bumper side bracket
7. Front bumper core <Vehicles for GCC>

- Horn (Refer to GROUP 54A, Horn)
- Ambient temperature sensor (Refer to GROUP 55A, Ambient Temperature Sensor)

8. Front bumper reinforcement A