SERVICE BULLETIN

MITSUBISHI MOTORS

GLOBAL AFTER SALES OFFICE, MITSUBISHI MOTORS CORPORATION

PURPOSE : CORRECTION	ISSUE NO. : MSB-15EX51-501	DATE : 2015-02-02
SUBJECT : Error in writing of the removal and installation procedure of the rear bumper		<DESTINATION/MODEL> (As shown below) ATTRAGE(A10) <M/Y> 14
GROUP : Gr:51(Exterior)		

1. Description :

Please refer to the attached document for the correction of the error in writing existing in the applicable service manual.

2. Affected service manuals :

<THAILAND>

Applicable manual	Pub No.	Applicable title (INFO ID)
2014 ATTRAGE Workshop Manual	DRAFT	REAR BUMPER ASSEMBLY REMOVAL AND INSTALLATION (M511-00-192-89800-01)

<EXP/GCC/ASEAN>

Applicable manual	Pub No.	Applicable title (INFO ID)
2014 ATTRAGE Workshop Manual	PWFE1305R PWFS1306R	REAR BUMPER ASSEMBLY REMOVAL AND INSTALLATION (M511-00-192-89800-01)

<EU>

Applicable manual	Pub No.	Applicable title (INFO ID)
2014 ATTRAGE Workshop Manual	CA1E14E1-CD (Eng) CA1F14E1-CD (Fre) CA1G14E1-CD (Ger)	REAR BUMPER ASSEMBLY REMOVAL AND INSTALLATION (M511-00-192-90600-01)

3. About the details :

Please refer to the attached document (Attached sheet)

Attached sheet

REAR BUMPER ASSEMBLY

REMOVAL AND INSTALLATION

<Deleted>

M1511001902898

~~**Pre-removal and post-installation operation**~~
- ~~Rear combination lamp assembly (Refer to GROUP 54A, Rear combination lamp)~~

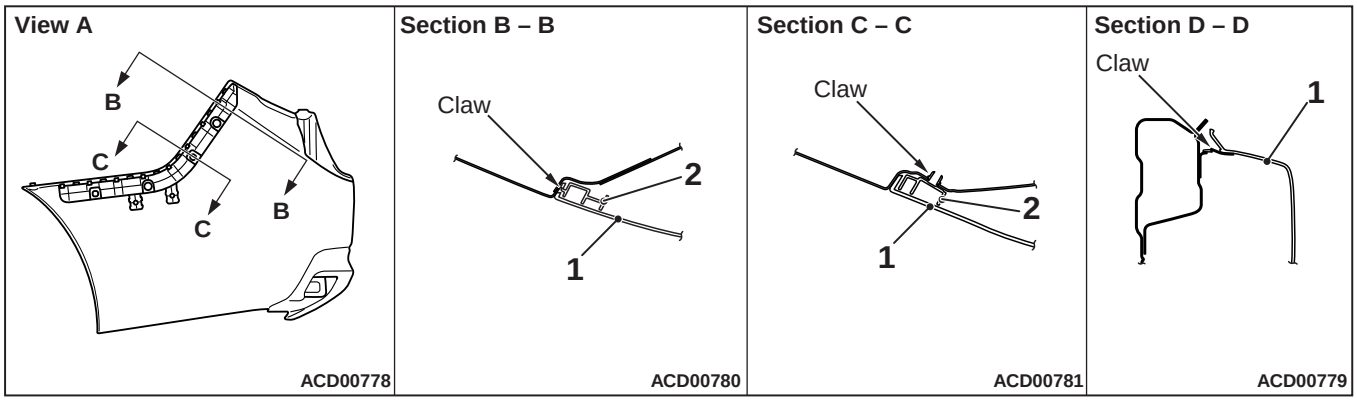

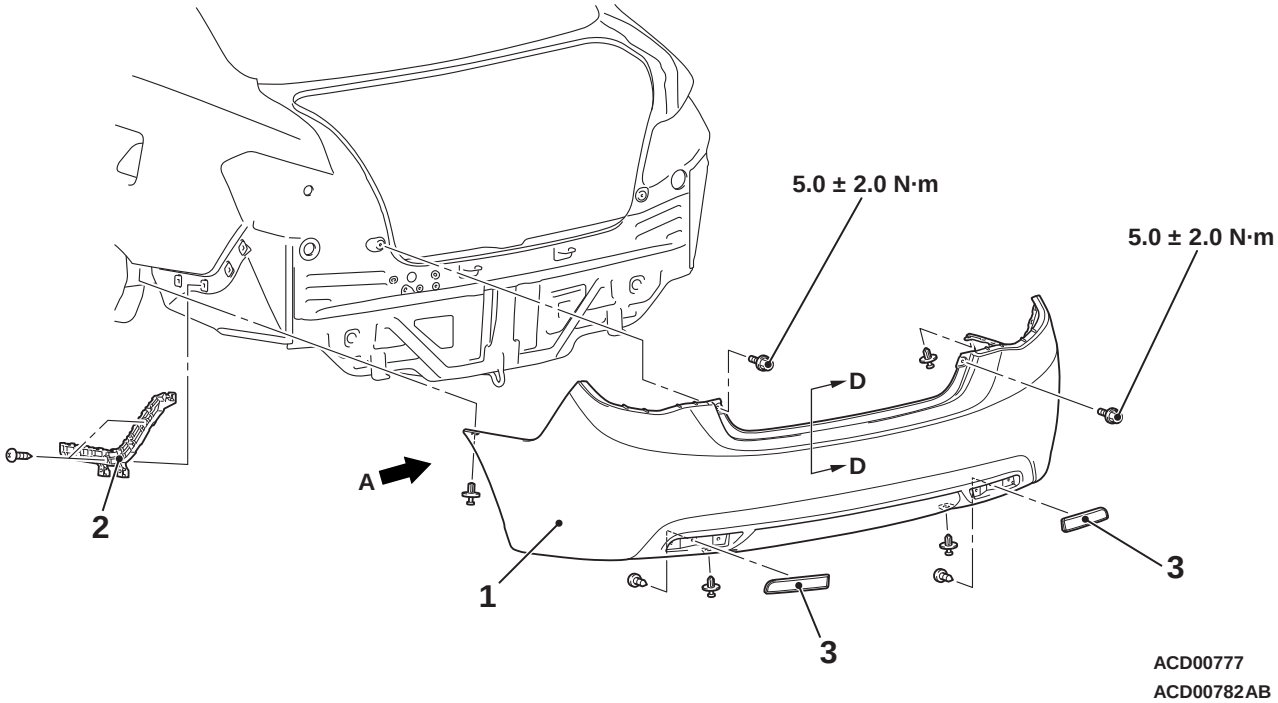

Removal steps
- Rear wheelhouse splash shield (Refer to GROUP 42A, Splash shield)

1. Rear bumper face

Removal steps (Continued)

2. Rear bumper side bracket
3. Reflex reflector