SERVICE BULLETIN

MITSUBISHI MOTORS

GLOBAL AFTER SALES OFFICE, MITSUBISHI MOTORS CORPORATION

PURPOSE : CHANGE	ISSUE NO. : MSB-15EXL22-001	DATE : 2015-02-03
SUBJECT : Change of the decomposition procedure of R5MB1/V5MB1(5speed transmission)		<DESTINATION/MODEL> (As per attached sheet 1)
GROUP : Gr:22(Manual transmission)		L200/TRITON/PAJERO SPORT/MONTERO SPORT/CHALLENGER

1. Description :

Please refer to the attached document for the information about the change of mention in the applicable service manual.

2. Affected service manuals :

Please refer to the attached document (Attached sheet 1)

3. About the details :

Please refer to the attached document (Attached sheet 2-7)

・KA4T/KB4T/KB8T/KB9T/KG4W/KH4W/KH8W/KH9W

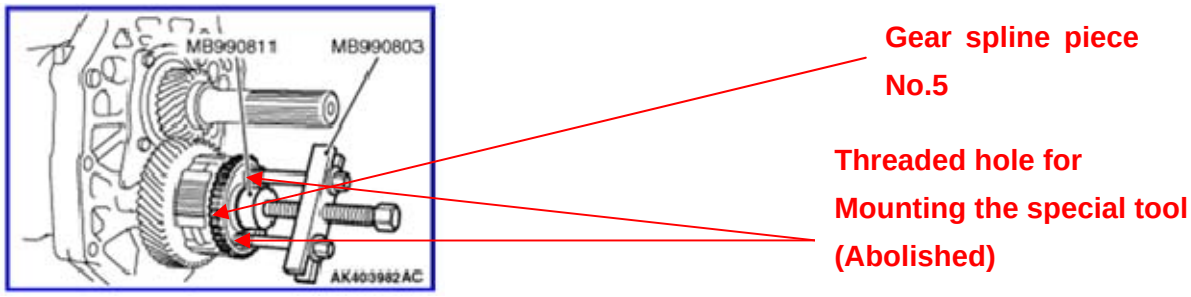

The threaded hole for mounting the special tool for removing the gear spline piece No.5 was abolished. By this change, the removal steps are added.

・KJ3T/KL3T/KK3T

As for the vehicle of KJ3T, KL3T, and KK3T which already abolished the threaded hole, the way of using the special tool is amended for the improvement of workability.

4. Effective time :

・KA4T/KB4T/KB8T/KB9T/KG4W/KH4W/KH8W/KH9W
From the vehicle produced from June 1, 2014
・KJ3T/KL3T/KK3T
From the initial vehicle

L200
<EU/RUSSIA>

Applicable manual	Pub. No.	Applicable title (INFO ID)	Content
2015 L200 Workshop Manual	CKTE15E1-CD(ENG) CKTF15E1-CD(FRE) CKTG15E1-CD(GER) CKTS15E1-CD(SPA) CKTI15E1-CD(ITA) RUSSIA:N/A	SPECIAL TOOLS (M222-00-060-53401-01)	Attached sheet 2
		TRANSMISSION DISASSEMBLY AND REASSEMBLY (M222-00-102-18800-01)	Attached sheet 3
		SPECIAL TOOLS (M222-00-061-13900-01)	Attached sheet 2
		TRANSMISSION DISASSEMBLY AND REASSEMBLY (M222-00-102-17700-01)	Attached sheet 4

<EXP>

Applicable manual	Pub. No.	Applicable title (INFO ID)	Content
2011 L200/L200 SPORTERO/ TRITON/STRADA/ STRADA SPORTERO Workshop Manual	PWJE1002R (ENG) PWJS1003R (SPA)	SPECIAL TOOLS (M222-00-060-53400-01)	Attached sheet 2
		TRANSMISSION DISASSEMBLY AND REASSEMBLY (M222-00-101-64600-01)	Attached sheet 3
		SPECIAL TOOLS (M222-00-060-46002-01)	Attached sheet 2
		TRANSMISSION DISASSEMBLY AND REASSEMBLY (M222-00-101-84000-01)	Attached sheet 4

TRITON
<THAILAND>

Applicable manual	Pub. No.	Applicable title (INFO ID)	Content
2010 TRITON Workshop Manual	DRAFT	SPECIAL TOOLS (M222-00-060-33000-01)	Attached Sheet 2
		TRANSMISSION DISASSEMBLY AND REASSEMBLY (M222-00-101-61300-01)	Attached sheet 4 *1
		SPECIAL TOOLS (M222-00-060-58900-01)	Attached sheet 2
		TRANSMISSION DISASSEMBLY AND REASSEMBLY (M222-00-101-62400-01)	Attached sheet 3 *2

NOTE:
*1: Removal step No. 50 has been modified.
*2: Removal step No. 46 has been modified.

TRITON
<MMAL/NZ>

Applicable manual	Pub. No.	Applicable title (INFO ID)	Content
2010 TRITON Workshop Manual	MR936949 NZ:DRAFT	SPECIAL TOOLS (M222-00-060-58900-01)	Attached Sheet 2
		TRANSMISSION DISASSEMBLY AND REASSEMBLY (M222-00-101-77600-01)	Attached sheet 3 *3
		SPECIAL TOOLS (M222-00-060-99800-01)	Attached sheet 2
		TRANSMISSION DISASSEMBLY AND REASSEMBLY (M222-00-101-75400-01)	Attached sheet 4

NOTE:
*3: Removal step No. 46 has been modified.

NATIVA/PAJERO SPORT/MONTERO SPORT
<EXP>

Applicable manual	Pub. No.	Applicable title (INFO ID)	Content
2011 NATIVA/PAJERO SPORT/MONTERO SPORT Workshop Manual	PWJE1004R(ENG) PWJS1005R(SPA)	SPECIAL TOOLS (M222-00-060-88000-01)	Attached Sheet 2
		TRANSMISSION DISASSEMBLY AND REASSEMBLY (M222-00-101-74300-01)	Attached sheet 4
		SPECIAL TOOLS (M222-00-060-53400-01)	Attached sheet 2
		TRANSMISSION DISASSEMBLY AND REASSEMBLY (M222-00-101-85100-01)	Attached sheet 3

CHALLENGER
<MMAL/NZ>

Applicable manual	Pub. No.	Applicable title (INFO ID)	Content
2011 CHALLENGER Workshop Manual	AU900054 NZ:DRAFT	SPECIAL TOOLS (M222-00-060-88000-01)	Attached Sheet 2
		TRANSMISSION DISASSEMBLY AND REASSEMBLY (M222-00-101-74300-01)	Attached sheet 4
		SPECIAL TOOLS (M222-00-060-53400-01)	Attached sheet 2
		TRANSMISSION DISASSEMBLY AND REASSEMBLY (M222-00-101-85100-01)	Attached sheet 3

L200/L200 SPORTERO/TRITON/STRADA/STRADA SPORTERO
＜KJ3T,KL3T,KK3T＞

Applicable manual	Pub. No.	Applicable title (INFO ID)	Content
2015 TRITON Workshop Manual	AU900413 NZ:DRAFT	SPECIAL TOOLS (M222-00-061-25800-01)	Attached Sheet 5
		TRANSMISSION DISASSEMBLY AND REASSEMBLY (M222-00-102-25200-01)	Attached Sheet 6
2016 L200/L200 SPORTERO/ TRITON/STRADA/ STRADA SPORTERO Workshop Manual	AU900436 AU900478 NZ:DRAFT	SPECIAL TOOLS (M222-00-061-24700-01)	Attached Sheet 5
		TRANSMISSION DISASSEMBLY AND REASSEMBLY (M222-00-102-26300-01)	Attached Sheet 7

Attached sheet 2

SPECIAL TOOLS

Transmission

Tool	Tool number	Name	Use
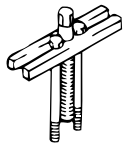 MB990803	MB990803	Steering wheel puller	Removal of gear spline piece No.5 <Threaded hole is machined> <Added>
 MB990811	MB990811	Side bearing puller cup	Use with Steering wheel puller <Threaded hole is machined> <Added>
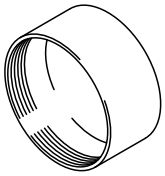	MD998812	Installer cap	Use with installer and adapter
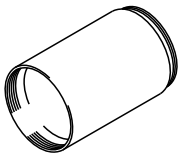	MD998813	Installer-100	Use with installer cap and adapter
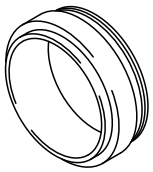	MD998827	Installer adapter (56)	Use with installer cap and adapter

<Added>

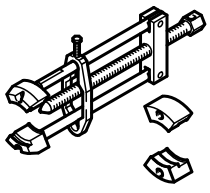	MD998020	Bearing puller	Removal of gear spline piece No.5 <Threaded hole is not machined>

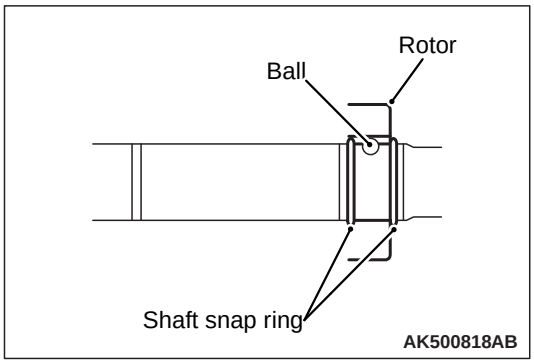

39.Remove the shaft snap ring (2 places).
40.Remove the rotor.
41.Remove the ball.

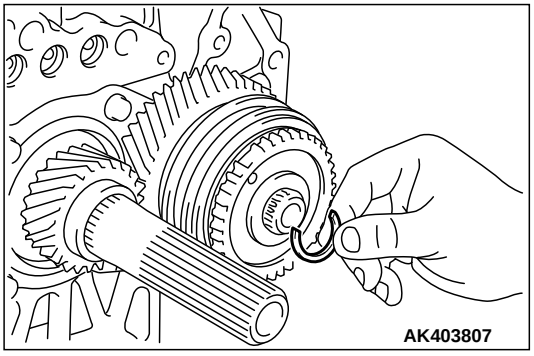

42.Remove the shaft snap ring.

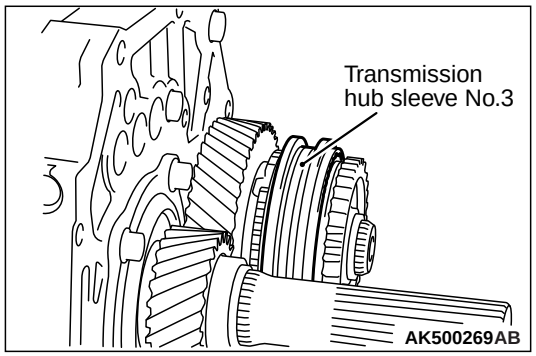

43.Remove the transmission hub sleeve No.3.

<Added>

Which tool to use depends on whether there are threaded hole on gear spline piece No. 5 or not.

<Threaded hole is machined>

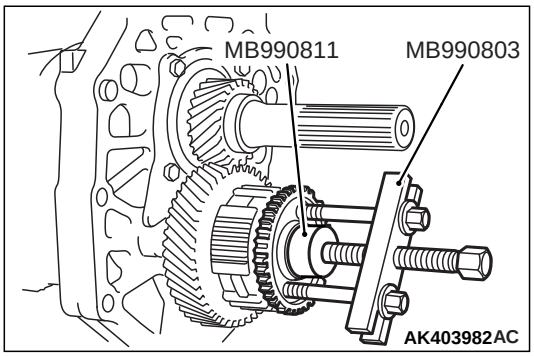

44.Use special tools to remove the gear spline piece No.5.

- Steering wheel puller (MB990803)
- Side bearing puller cup (MB990811)

<Added>

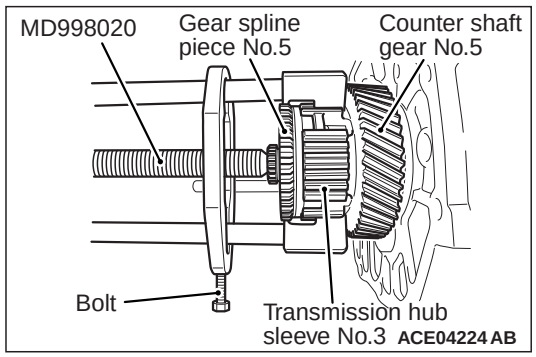

CAUTION

- **Fit special tool MD998020 to transmission hub sleeve No. 3. Do not install it to counter shaft gear No. 5 as the gear teeth will be damaged.**
- **Tighten the bolts securely so that special tool (MD998020) is unhooked.**

<Threaded hole is not machined>

- Bearing puller (MD998020)

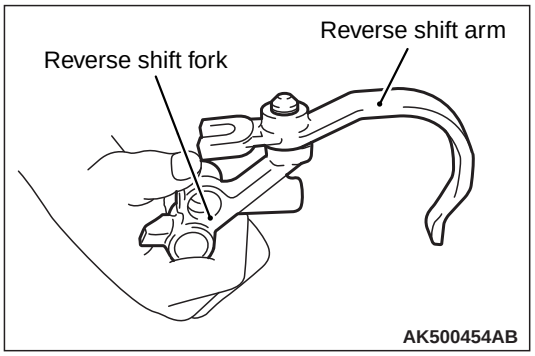

45.Remove the reverse shift arm.

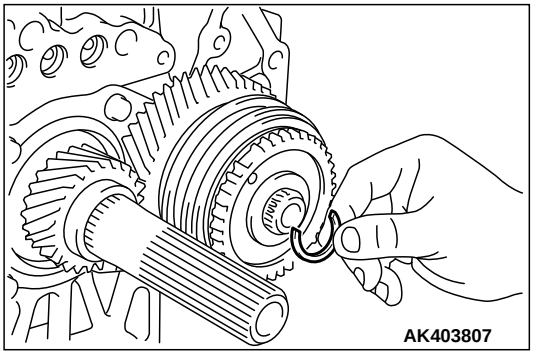

46.Remove the shaft snap ring.

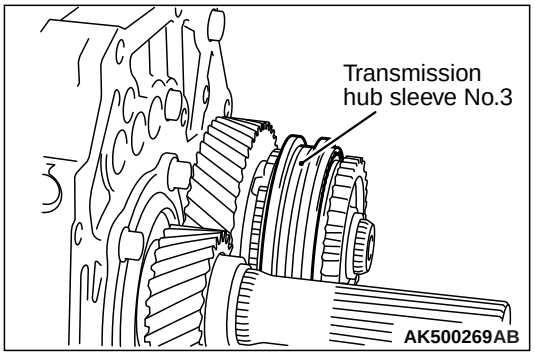

47.Remove the transmission hub sleeve No.3.

<Added>

Which tool to use depends on whether there are threaded hole on gear spline piece No. 5 or not.

<Threaded hole is machined>

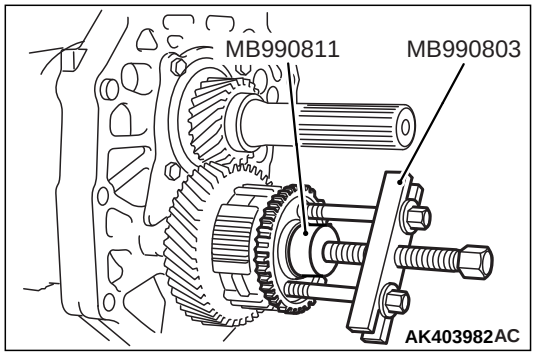

48.Use special tools to remove the gear spline piece No.5.

- Steering wheel puller (MB990803)
- Side bearing puller cup (MB990811)

<Added>

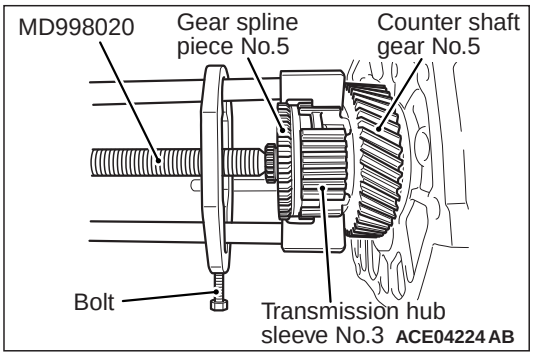

CAUTION

- **Fit special tool MD998020 to transmission hub sleeve No. 3. Do not install it to counter shaft gear No. 5 as the gear teeth will be damaged.**
- **Tighten the bolts securely so that special tool (MD998020) is unhooked.**

<Threaded hole is not machined>

- Bearing puller (MD998020)

Attached sheet 5

SPECIAL TOOLS

Tool	Tool number	Name	Use
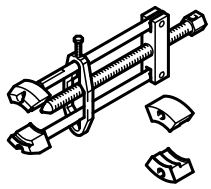	MD998020	Bearing puller	Removal of gear spline piece No.5 <Deleted>
 MB990811	MB990811	Side bearing puller cup	Use with Steering wheel puller
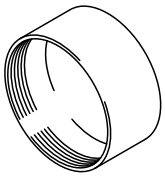	MD998812	Installer cap	Use with installer and adapter
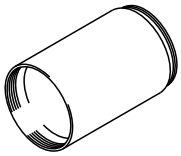	MD998813	Installer-100	Use with installer cap and adapter
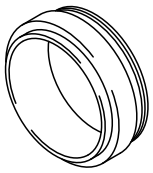	MD998827	Installer adapter (56)	Use with installer cap and adapter
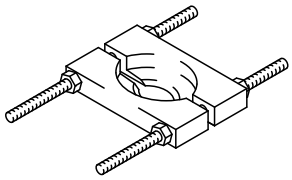	MD998801	Bearing remover	Removal of roller bearing and ball bearing, input gear corn ring, transmission clutch hub No.1 and transmission clutch hub No.2
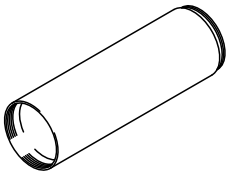	MD998814	Installer-200	Use with installer cap and adapter
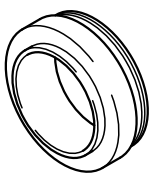	MD998823	Installer adapter (48)	Installation of ball bearing, 5th gear, transmission clutch hub No.1 and transmission hub No.2

Attached sheet 6

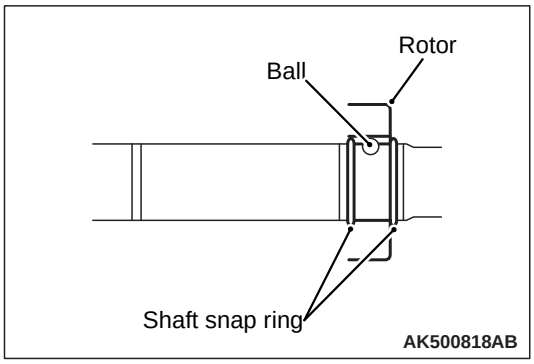

39.Remove the shaft snap ring (2 places).
40.Remove the rotor.
41.Remove the ball.

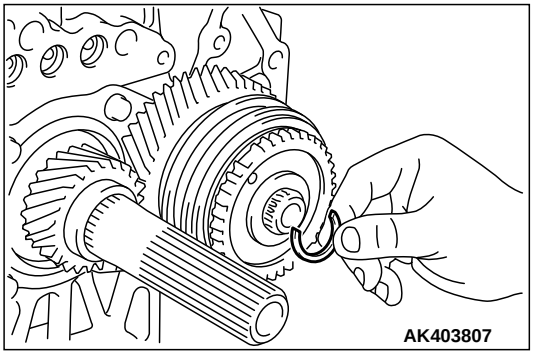

42.Remove the shaft snap ring.

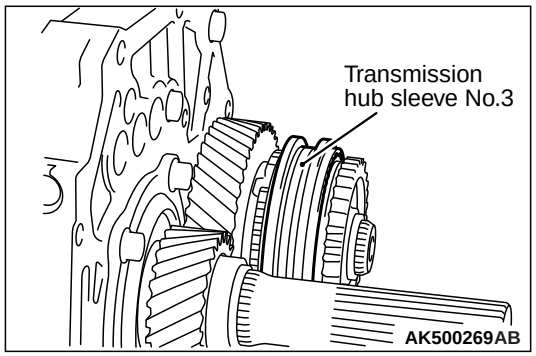

43.Remove the transmission hub sleeve No.3.

<Added>

⚠ CAUTION

- **Fit special tool MD998020 to transmission hub sleeve No. 3. Do not install it to counter shaft gear No. 5 as the gear teeth will be damaged.**
- **Tighten the bolts securely so that special tool (MD998020) is unhooked.**

44.Use special tools to remove the gear spline piece No.5.

- Bearing puller (MD998020)
- ~~Side bearing puller cup (MB990811)~~ <Deleted>

<Incorrect>

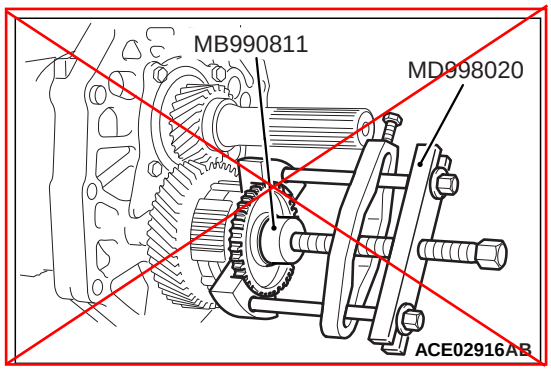

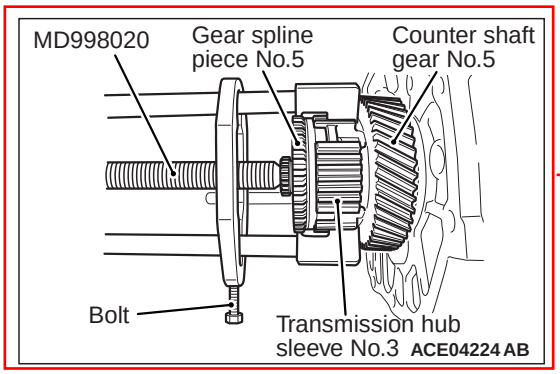

<Correct>

Attached sheet 7

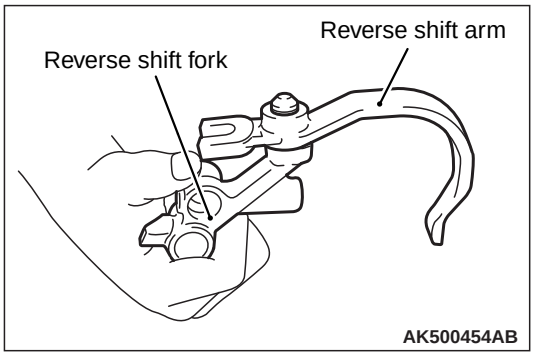

45.Remove the reverse shift arm.

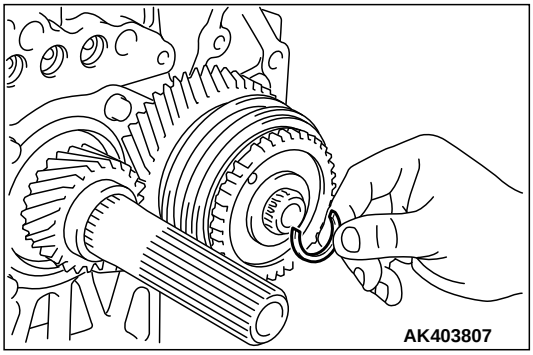

46.Remove the shaft snap ring.

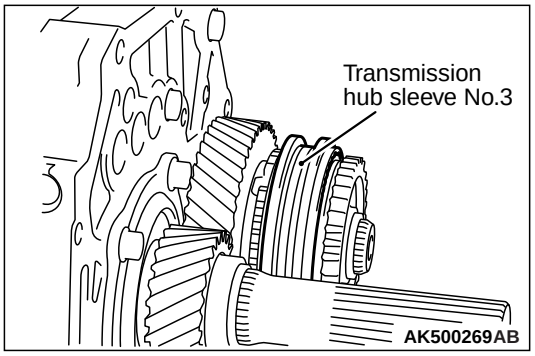

47.Remove the transmission hub sleeve No.3.

<Added>

CAUTION

- **Fit special tool MD998020 to transmission hub sleeve No. 3. Do not install it to counter shaft gear No. 5 as the gear teeth will be damaged.**
- **Tighten the bolts securely so that special tool (MD998020) is unhooked.**

48.Use special tools to remove the gear spline piece No.5.

- Bearing puller (MD998020)
- ~~Side bearing puller cup (MB990811)~~ <Deleted>

<Incorrect>

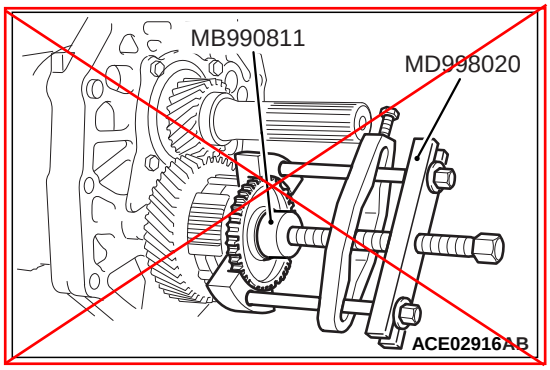

<Correct>

