SERVICE BULLETIN

MITSUBISHI MOTORS

GLOBAL AFTER SALES OFFICE, MITSUBISHI MOTORS CORPORATION

PURPOSE : CHANGE	ISSUE NO. : MSB-15EXL22-002	DATE : 2015-07-24
SUBJECT : Changes and additions of the manual transmission components		<DESTINATION/MODEL> (EU/RUSSIA/G.EXP/GCC/MMAL/NZ/THAILAND) L200/SPORTERO/TRITON/STRADA/ STRADA SPORTERO(KJ0T/KL0T/KK0T) <M/Y> 15-16
GROUP : Gr:22(Manual transmission)		

1. Description :

Please refer to the attached document for the information about the change of mention in the applicable service manual.

- Two washers are added in the rear output shaft.
- The length of the collar is change. (36.0mm→34.4mm)

2. Affected service manuals :

Destination	Applicable manual	Pub. No.	Applicable title (INFO ID)	Contents
THAI	2015 TRITON Workshop Manual	DRAFT	REAR OUTPUT SHAFT DISASSEMBLY AND REASSEMBLY (M222-01-030-25500-01)	Attached sheet 1
EXP/GCC/ MMAL/NZ	2015-2016 L200/SPORTERO/TRITON/ STRADA/STRADA SPORTERO Workshop Manual	PWTE1502R(ENG) PWTS1503R(SPA) MMAL:AU900413/ AU900436 AU900478 NZ:DRAFT	REAR OUTPUT SHAFT DISASSEMBLY AND REASSEMBLY (M222-01-030-25500-01)	Attached sheet 1
EU	2016 L200 Workshop Manual	CKTE16E1-CD(ENG) CKTF16E1-CD(FRE) CKTG16E1-CD(GER) CKTS16E1-CD(SPA) CKTI16E1-CD(ITA)	REAR OUTPUT SHAFT DISASSEMBLY AND REASSEMBLY (M222-01-030-26600-01)	Attached sheet 2

3. About the details :

Please refer to the attached document (Attached sheet 1-2)

4. Effective time : From the vehicles produced from the beginning of June 2015.

※Please be sure to replace not only the collar but also the washers in case that you change the color in the vehicle which the washers are not attached to.

REAR OUTPUT SHAFT

DISASSEMBLY AND REASSEMBLY

M1222010300255

<Easy select 4WD>

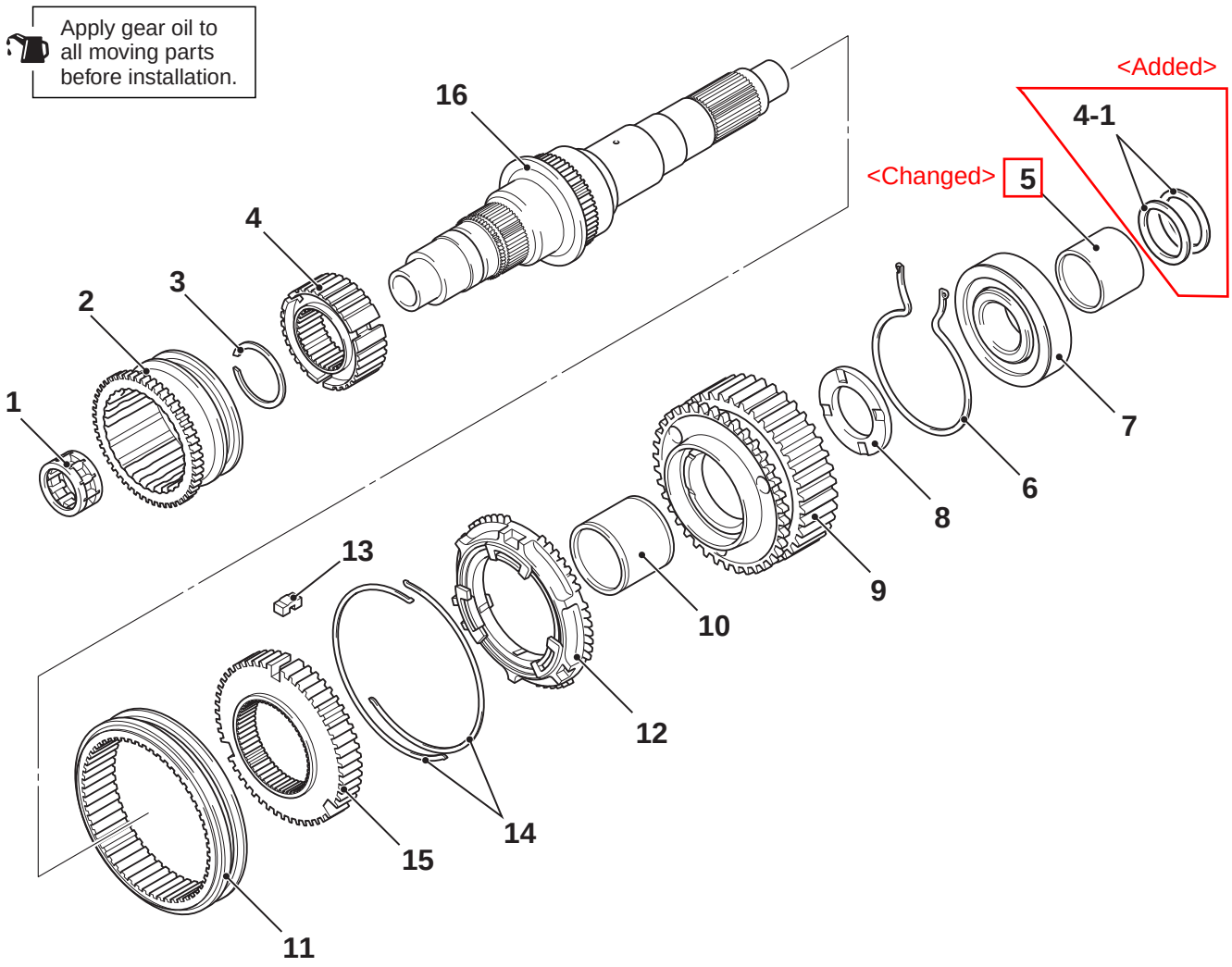

ACF02321AC

Disassembly steps

	1.	Needle roller bearing
	2.	H-L clutch sleeve
>>**D**<<	3.	Snap ring
>>**C**<<	4.	Clutch hub
<Added>	4-1.	Washer
	5.	Collar
	6.	Snap ring
<<**A**>> >>**A**<<	7.	Ball bearing
	8.	Spacer

Disassembly steps (Continued)

	9.	Drive sprocket
	10.	Bearing
	11.	Synch spring <V6M5A-1-A1ZC>
	12.	Synch ring <V6M5A-1-A1ZC>
>>**B**<<	13.	Clutch sleeve
	14.	Synch hub
	15.	Synch key
	16.	Rear output shaft

<Super select 4WD>

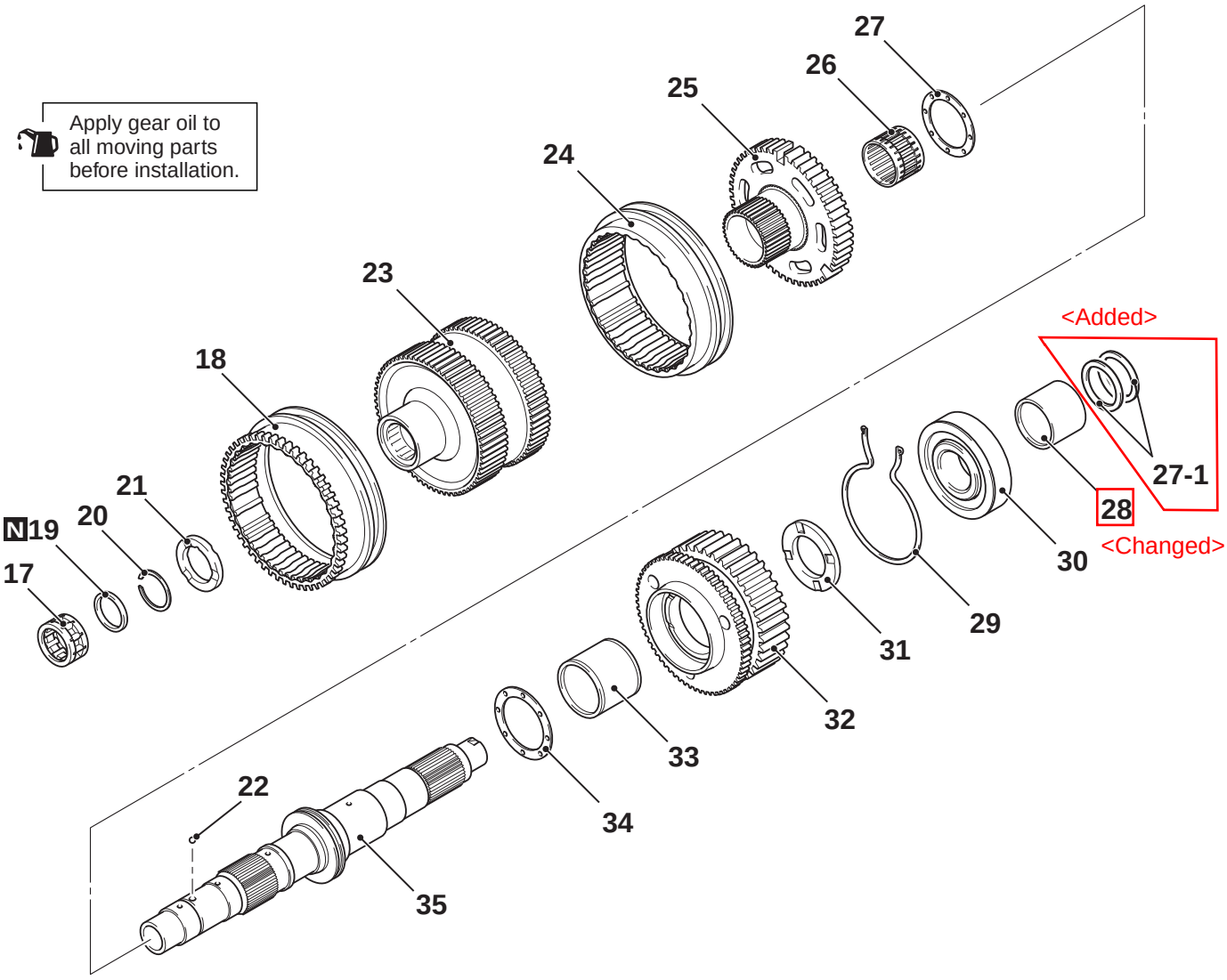

ACE03863AB

Disassembly steps

17. Needle roller bearing
18. H-L clutch sleeve
19. O-ring
20. Snap ring
21. Spacer
22. Ball
23. Centre differential assembly
24. 2WD & 4WD clutch sleeve
25. H-L clutch hub
26. Needle roller bearing
27. Washer

Disassembly steps (Continued)

<Added> 27-1. Washer
28. Collar
29. Snap ring
<<A>> >>A<< 30. Ball bearing
31. Spacer
32. Drive sprocket
33. Bearing
34. Washer
35. Rear output shaft

REAR OUTPUT SHAFT

DISASSEMBLY AND REASSEMBLY

M1222010300266

<Easy select 4WD>

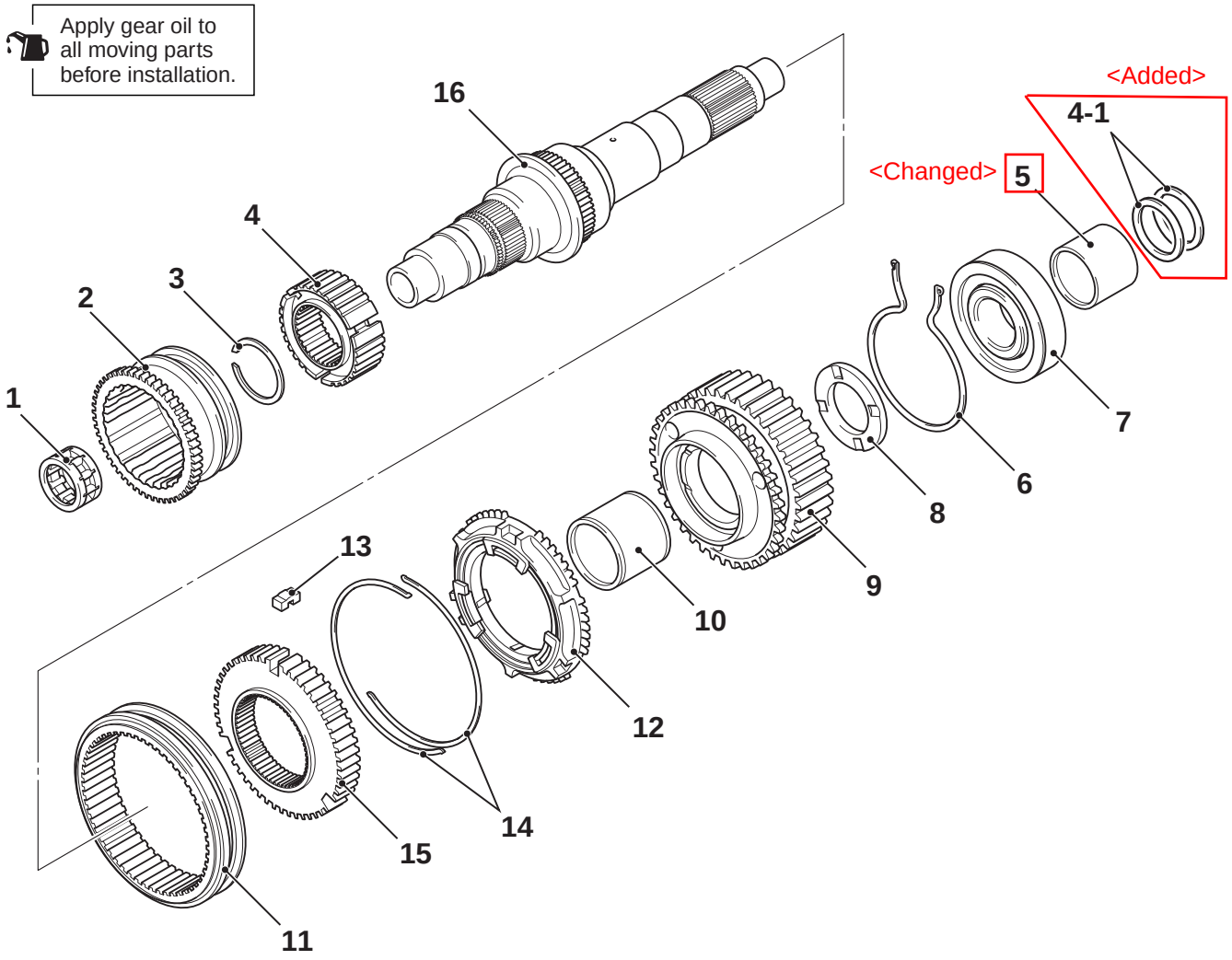

ACF02321AC

Disassembly steps

	1.	Needle roller bearing
	2.	H-L clutch sleeve
>>**E**<<	3.	Snap ring
>>**D**<<	4.	Clutch hub
<Added>	4-1.	Washer
	5.	Collar
	6.	Snap ring
<<**A**>> >>**A**<<	7.	Ball bearing
	8.	Spacer
	9.	Drive sprocket

Disassembly steps (Continued)

	10.	Bearing
>>**C**<<	11.	Clutch sleeve
	12.	Synch ring <V6M5A-1-A2ZC, V6M5A-1-A1ZC>
>>**B**<<	13.	Synch key <V6M5A-1-A2ZC, V6M5A-1-A1ZC>
>>**B**<<	14.	Synch spring <V6M5A-1-A2ZC, V6M5A-1-A1ZC>
	15.	Synch hub
	16.	Rear output shaft

<Super select 4WD>

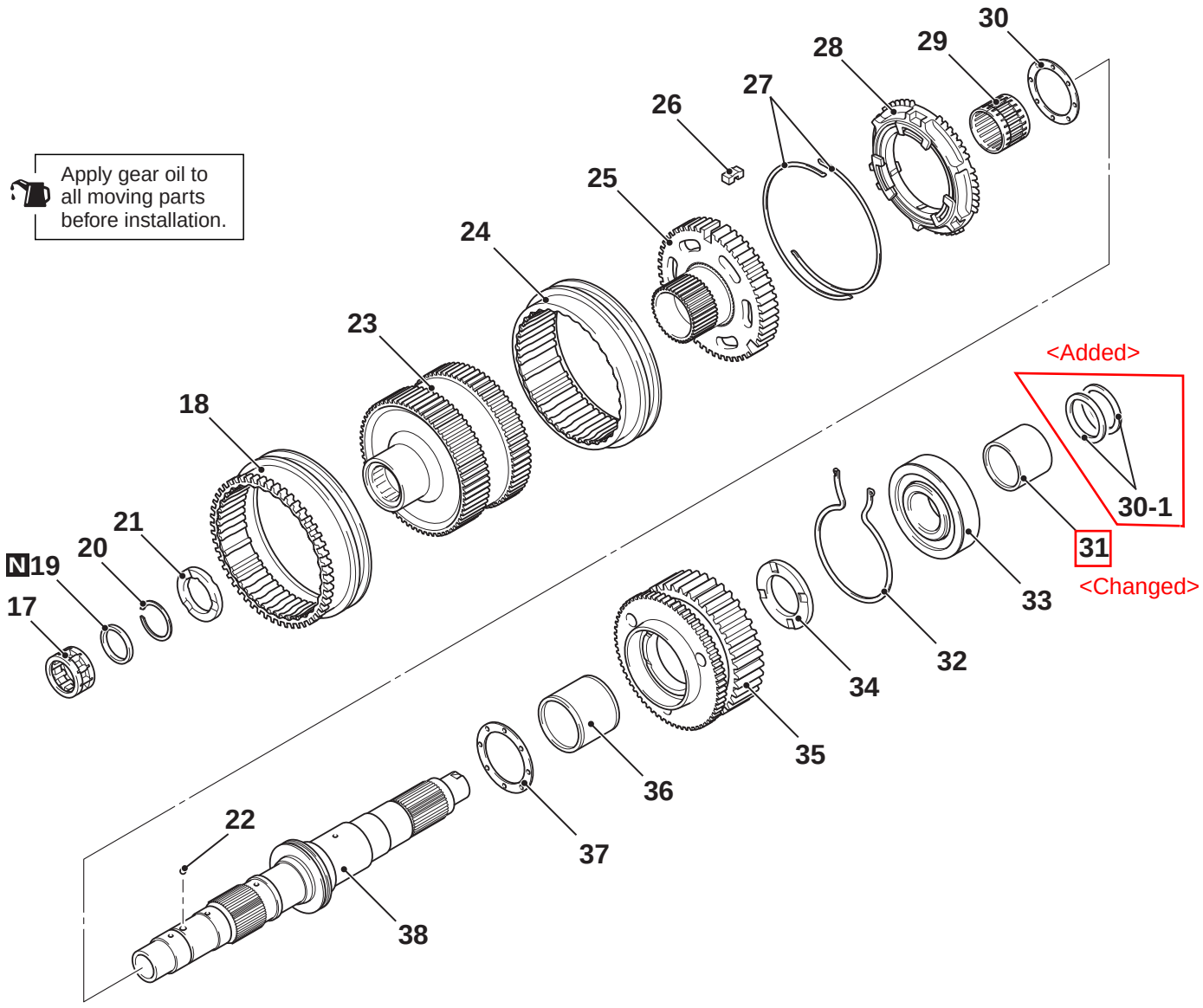

ACF02315AC

Disassembly steps

17. Needle roller bearing
18. H-L clutch sleeve
19. O-ring
20. Snap ring
21. Spacer
22. Ball
23. Centre differential assembly
24. 2WD & 4WD clutch sleeve
25. H-L clutch hub

>>**B**<< 26. Synch key <V6M5A-1-A2ZA, V6M5A-1-A1ZA>

>>**B**<< 27. Synch spring <V6M5A-1-A2ZA, V6M5A-1-A1ZA>

Disassembly steps (Continued)

28. Synch ring <V6M5A-1-A2ZA, V6M5A-1-A1ZA>
29. Needle roller bearing
30. Washer

<Added> 30-1. Washer

31. Collar
32. Snap ring

<<**A**>> >>**A**<< 33. Ball bearing

34. Spacer
35. Drive sprocket
36. Bearing
37. Washer
38. Rear output shaft