SERVICE BULLETIN

MITSUBISHI MOTORS

GLOBAL AFTER SALES OFFICE, MITSUBISHI MOTORS CORPORATION

PURPOSE : CHANGE	ISSUE NO. : MSB-15EXL27-001	DATE : 2015-02-03
SUBJECT : Change of the special tool for removal of the axle shaft bearing and bearing case		<DESTINATION/MODEL> (As per attached sheet 1) <M/Y> 06-16
GROUP : Gr:27(Rear axle)		

1. Description :

Please refer to the attached document for the information about the change of mention in the applicable service manual.

2. Affected service manuals :

Please refer to the attached document (Attached sheet 1)

3. About the details :

Please refer to the attached document (Attached sheet 3-4)

4. Effective time : From the initial vehicle

TRITON
<THAILAND>

Applicable manual	Pub. No.	Applicable title (INFO ID)	Content
2006 TRITON Workshop Manual	DRAFT	SPECIAL TOOLS (M271-00-060-64400-01)	Attached Sheet 3 (1/3)
		AXLE SHAFT ASSEMBLY DISASSEMBLY AND REASSEMBLY (M271-00-270-15300-01)	Attached Sheet 3 (2/3), Attached Sheet 3 (3/3)
2008 TRITON Workshop Manual	DRAFT	SPECIAL TOOLS (M271-00-060-64400-01)	Attached Sheet 3 (1/3)
		AXLE SHAFT ASSEMBLY DISASSEMBLY AND REASSEMBLY (M271-00-270-15301-01)	Attached Sheet 3 (2/3), Attached Sheet 3 (3/3)
2009 TRITON Workshop Manual	DRAFT	SPECIAL TOOLS (M271-00-060-64401-01)	Attached Sheet 3 (1/3)
		AXLE SHAFT ASSEMBLY DISASSEMBLY AND REASSEMBLY (M271-00-270-15304-01)	Attached Sheet 3 (2/3), Attached Sheet 3 (3/3)
2010 TRITON Workshop Manual	DRAFT	SPECIAL TOOLS (M271-00-060-64402-01)	Attached Sheet 3 (1/3)
		AXLE SHAFT ASSEMBLY DISASSEMBLY AND REASSEMBLY (M271-00-270-15304-01)	Attached Sheet 3 (2/3), Attached Sheet 3 (3/3)
2015 TRITON Workshop Manual	DRAFT	SPECIAL TOOLS (M271-00-061-56201-01)	Attached Sheet 3 (1/3)
		AXLE SHAFT ASSEMBLY DISASSEMBLY AND REASSEMBLY (M271-00-270-27200-01)	Attached Sheet 3 (2/3), Attached Sheet 3 (3/3)

L200
<EU/RUSSIA>

Applicable manual	Pub. No.	Applicable title (INFO ID)	Content
2007 L200 Workshop Manual	CCRE07E2-CD (ENG) CCRF07E2-CD (FRE) CCRG07E2-CD (GER) CCRS07E2-CD (SPA) RUSSIA:N/A	SPECIAL TOOLS (M271-00-060-74100-01)	Attached Sheet 3 (1/3)
		AXLE SHAFT ASSEMBLY DISASSEMBLY AND REASSEMBLY (M271-00-270-18601-01)	Attached Sheet 3 (2/3), Attached Sheet 3 (3/3)
2009 L200 Workshop Manual	CCRE09E1-CD (ENG) CCRF09E1-CD (FRE) CCRG09E1-CD (GER) CCRS09E1-CD (SPA) CCRI09E1-CD (ITA) RUSSIA:N/A	SPECIAL TOOLS (M271-00-060-74101-01)	Attached Sheet 3 (1/3)
		AXLE SHAFT ASSEMBLY DISASSEMBLY AND REASSEMBLY (M271-00-270-18604-01)	Attached Sheet 3 (2/3), Attached Sheet 3 (3/3)
2010 L200 Workshop Manual	CCRE10E1-CD (ENG) CCRF10E1-CD (FRE) CCRG10E1-CD (GER) CCRS10E1-CD (SPA) CCRI10E1-CD (ITA) RUSSIA:N/A	SPECIAL TOOLS (M271-00-061-18600-01)	Attached Sheet 3 (1/3)
		AXLE SHAFT ASSEMBLY DISASSEMBLY AND REASSEMBLY (M271-00-270-18604-01)	Attached Sheet 3 (2/3), Attached Sheet 3 (3/3)
2011 L200 Workshop Manual	CCRE11E1-CD (ENG) CCRF11E1-CD (FRE) CCRG11E1-CD (GER) CCRS11E1-CD (SPA) CCRI11E1-CD (ITA) RUSSIA:N/A	SPECIAL TOOLS (M271-00-061-18600-01)	Attached Sheet 3 (1/3)
		AXLE SHAFT ASSEMBLY DISASSEMBLY AND REASSEMBLY (M271-00-270-18604-01)	Attached Sheet 3 (2/3), Attached Sheet 3 (3/3)
2012 L200 Workshop Manual	CCRE12E1-CD (ENG) CCRF12E1-CD (FRE)	SPECIAL TOOLS (M271-00-061-18600-01)	Attached Sheet 3 (1/3)

	CCRG12E1-CD (GER) CCRS12E1-CD (SPA) CCRI12E1-CD (ITA) RUSSIA:N/A	AXLE SHAFT ASSEMBLY DISASSEMBLY AND REASSEMBLY (M271-00-270-18604-01)	Attached Sheet 3 (2/3), Attached Sheet 3 (3/3)
2013 L200 Workshop Manual	CKTE13E1-CD (ENG) CKTF13E1-CD (FRE) CKTG13E1-CD (GER) CKTS13E1-CD (SPA) CKTI13E1-CD (ITA) RUSSIA:N/A	SPECIAL TOOLS (M271-00-061-18600-01)	Attached Sheet 3 (1/3)
		AXLE SHAFT ASSEMBLY DISASSEMBLY AND REASSEMBLY (M271-00-270-18604-01)	Attached Sheet 3 (2/3), Attached Sheet 3 (3/3)
2014 L200 Workshop Manual	CKTE14E1-CD (ENG) CKTF14E1-CD (FRE) CKTG14E1-CD (GER) CKTS14E1-CD (SPA) CKTI14E1-CD (ITA) RUSSIA:N/A	SPECIAL TOOLS (M271-00-061-18600-01)	Attached Sheet 3 (1/3)
		AXLE SHAFT ASSEMBLY DISASSEMBLY AND REASSEMBLY (M271-00-270-18604-01)	Attached Sheet 3 (2/3), Attached Sheet 3 (3/3)
2015 L200 Workshop Manual	CKTE15E1-CD (ENG) CKTF15E1-CD (FRE) CKTG15E1-CD (GER) CKTS15E1-CD (SPA) CKTI15E1-CD (ITA) RUSSIA:N/A	SPECIAL TOOLS (M271-00-061-18601-01)	Attached Sheet 3 (1/3)
		AXLE SHAFT ASSEMBLY DISASSEMBLY AND REASSEMBLY (M271-00-270-18604-01)	Attached Sheet 3 (2/3), Attached Sheet 3 (3/3)
2016 L200 Workshop Manual	CKTE16E1-CD (ENG) CKTF16E1-CD (FRE) CKTG16E1-CD (GER) CKTS16E1-CD (SPA) CKTI16E1-CD (ITA) RUSSIA:N/A	SPECIAL TOOLS (M271-00-061-56201-01)	Attached Sheet 4 (1/3)
		AXLE SHAFT ASSEMBLY DISASSEMBLY AND REASSEMBLY (M271-00-270-27201-01)	Attached Sheet 4 (2/3), Attached Sheet 4 (3/3)

L200/L200 SPORTERO/TRITON/STRADA/STRADA SPORTERO
<G.EXP>

Applicable manual	Pub. No.	Applicable title (INFO ID)	Content
2007 L200/L200 SPORTERO/ TRITON/STRADA/ STRADA SPORTERO Workshop Manual	PWTE0603R1(ENG) PWTS0604R1(SPA)	SPECIAL TOOLS (M271-00-060-90100-01)	Attached Sheet 3 (1/3)
		AXLE SHAFT ASSEMBLY DISASSEMBLY AND REASSEMBLY (M271-00-270-15301-01)	Attached Sheet 3 (2/3), Attached Sheet 3 (3/3)
2008 L200/L200 SPORTERO/ TRITON/STRADA/ STRADA SPORTERO Workshop Manual	PWTE0703R(ENG) PWTS0704R(SPA)	SPECIAL TOOLS (M271-00-060-90101-01)	Attached Sheet 3 (1/3)
		AXLE SHAFT ASSEMBLY DISASSEMBLY AND REASSEMBLY (M271-00-270-15302-01)	Attached Sheet 3 (2/3), Attached Sheet 3 (3/3)
2009 L200/L200 SPORTERO/ TRITON/STRADA/ STRADA SPORTERO Workshop Manual	PWTE0806R(ENG) PWTS0807R(SPA)	SPECIAL TOOLS (M271-00-060-90102-01)	Attached Sheet 3 (1/3)
		AXLE SHAFT ASSEMBLY DISASSEMBLY AND REASSEMBLY (M271-00-270-15303-01)	Attached Sheet 3 (2/3), Attached Sheet 3 (3/3)
2010 L200/L200 SPORTERO/ TRITON/STRADA/ STRADA SPORTERO Workshop Manual	PWTE0903R(ENG) PWTS0904R(SPA)	SPECIAL TOOLS (M271-00-060-90103-01)	Attached Sheet 3 (1/3)
		AXLE SHAFT ASSEMBLY DISASSEMBLY AND REASSEMBLY (M271-00-270-15305-01)	Attached Sheet 3 (2/3), Attached Sheet 3 (3/3)
2011 L200/L200 SPORTERO/ TRITON/STRADA/ STRADA SPORTERO Workshop Manual	PWTE1002R(ENG) PWTS1003R(SPA)	SPECIAL TOOLS (M271-00-061-36800-01)	Attached Sheet 3 (1/3)
		AXLE SHAFT ASSEMBLY DISASSEMBLY AND REASSEMBLY (M271-00-270-15305-01)	Attached Sheet 3 (2/3), Attached Sheet 3 (3/3)

L200/L200 SPORTERO/TRITON/STRADA/STRADA SPORTERO
<ASEAN>

Applicable manual	Pub. No.	Applicable title (INFO ID)	Content
2016 L200/L200 SPORTERO/ TRITON/STRADA/ STRADA SPORTERO Workshop Manual	DRAFT	SPECIAL TOOLS (M271-00-061-56201-01)	Attached Sheet 4 (1/3)
		AXLE SHAFT ASSEMBLY DISASSEMBLY AND REASSEMBLY (M271-00-270-27201-01)	Attached Sheet 4 (2/3), Attached Sheet 4 (3/3)

TRITON
<MMAL/NZ>

Applicable manual	Pub. No.	Applicable title (INFO ID)	Content
2007 TRITON Workshop Manual	MR936105 NZ:DRAFT	SPECIAL TOOLS (M271-00-060-85900-01)	Attached Sheet 3 (1/3)
		AXLE SHAFT ASSEMBLY DISASSEMBLY AND REASSEMBLY (M271-00-270-20500-01)	Attached Sheet 3 (2/3), Attached Sheet 3 (3/3)
2007.5 TRITON Workshop Manual	MR936245 NZ:DRAFT	SPECIAL TOOLS (M271-00-060-78500-01)	Attached Sheet 3 (1/3)
		AXLE SHAFT ASSEMBLY DISASSEMBLY AND REASSEMBLY (M271-00-270-18601-01)	Attached Sheet 3 (2/3), Attached Sheet 3 (3/3)
2008 TRITON Workshop Manual	MR936232 NZ:DRAFT	SPECIAL TOOLS (M271-00-060-78500-01)	Attached Sheet 3 (1/3)
		AXLE SHAFT ASSEMBLY DISASSEMBLY AND REASSEMBLY (M271-00-270-18602-01)	Attached Sheet 3 (2/3), Attached Sheet 3 (3/3)
2009 TRITON Workshop Manual	MR936476 NZ:DRAFT	SPECIAL TOOLS (M271-00-060-78502-01)	Attached Sheet 3 (1/3)
		AXLE SHAFT ASSEMBLY DISASSEMBLY AND REASSEMBLY (M271-00-270-18603-01)	Attached Sheet 3 (2/3), Attached Sheet 3 (3/3)
2010 TRITON Workshop Manual	MR936949 NZ:DRAFT	SPECIAL TOOLS (M271-00-061-20500-01)	Attached Sheet 3 (1/3)
		AXLE SHAFT ASSEMBLY DISASSEMBLY AND REASSEMBLY (M271-00-270-18604-01)	Attached Sheet 3 (2/3), Attached Sheet 3 (4/3)
2016 TRITON Workshop Manual	AU900436 NZ:DRAFT	SPECIAL TOOLS (M271-00-061-56201-01)	Attached Sheet 4 (1/3)
		AXLE SHAFT ASSEMBLY DISASSEMBLY AND REASSEMBLY (M271-00-270-27201-01)	Attached Sheet 4 (2/3), Attached Sheet 4 (3/3)

NATIVA/PAJERO SPORT/MONTERO SPORT
<G.EXP/THAILAND>

Applicable manual	Pub. No.	Applicable title (INFO ID)	Content
2009 NATIVA/ PAJERO SPORT/ MONTERO SPORT Workshop Manual	PWJE0808R-2 (EUR) PWJS0809R-2 (SPA) THAI:DRAFT	SPECIAL TOOLS (M271-00-061-10801-01)	Attached Sheet 3 (1/3)
		AXLE SHAFT ASSEMBLY DISASSEMBLY AND REASSEMBLY (M271-00-270-23800-01)	Attached Sheet 3 (2/3), Attached Sheet 3 (3/3)
2010 NATIVA/ PAJERO SPORT/ MONTERO SPORT Workshop Manual	PWJE0910R (EUR) PWJS0911R (SPA) THIA:DRAFT	SPECIAL TOOLS (M271-00-061-10801-01)	Attached Sheet 3 (1/3)
		AXLE SHAFT ASSEMBLY DISASSEMBLY AND REASSEMBLY (M271-00-270-23800-01)	Attached Sheet 3 (2/3), Attached Sheet 3 (3/3)
2011 NATIVA/ PAJERO SPORT/ MONTERO SPORT Workshop Manual	PWJE1004R (ENG) PWJS1005R (SPA) THAI:DRAFT	SPECIAL TOOLS (M271-00-061-35700-01)	Attached Sheet 3 (1/3)
		AXLE SHAFT ASSEMBLY DISASSEMBLY AND REASSEMBLY (M271-00-270-23800-01)	Attached Sheet 3 (2/3), Attached Sheet 3 (3/3)

CHALLENGER
<MMAL/NZ>

Applicable manual	Pub. No.	Applicable title (INFO ID)	Content
2010 GHALLENGER Workshop Manual	MR936972 NZ:DRAFT	SPECIAL TOOLS (M271-00-061-10801-01)	Attached Sheet 3 (1/3)
		AXLE SHAFT ASSEMBLY DISASSEMBLY AND REASSEMBLY (M271-00-270-23800-01)	Attached Sheet 3 (2/3), Attached Sheet 3 (4/3)
2011 GHALLENGER Workshop Manual	AU900055 NZ:DRAFT	SPECIAL TOOLS (M271-00-061-35700-01)	Attached Sheet 3 (1/3)
		AXLE SHAFT ASSEMBLY DISASSEMBLY AND REASSEMBLY (M271-00-270-23800-01)	Attached Sheet 3 (2/3), Attached Sheet 3 (3/3)

<New>

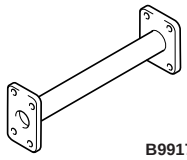 B991792	MB991792	Axle shaft bearing case remover	Removal of the axle shaft bearing and bearing case

Tool	Number	Name	Use
 MB990241	MB990241	Rear axle shaft puller	Removal of axle shaft (use together with MB990211)
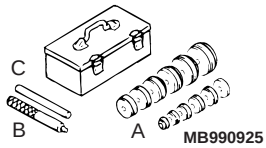 MB990925 <Old>	MB990925 A: MB990926 – MB990937 B: MB990938 C: MB990939	Bearing and oil seal installer set A: Installer adapter B: Installer bar C: Remover bar	• Installation of axle housing oil seal • Press-fitting of bearing outer race • Press fitting of oil seal • Press-fitting of drive pinion front bearing outer race For details of each installer, refer to GROUP 26 – Special Tools .
 MB991522	MB991552	Axle shaft bearing and case remover	Removal of the axle shaft bearing and bearing case
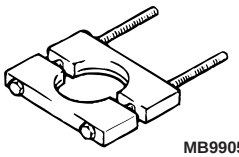 MB990560	MB990560	Rear axle shaft bearing remover	Removal of bearing inner race
 MB990799	MB990799	Ball joint remover and installer A	Removal of bearing case, bearing outer race Press-fitting of bearing inner race Press-fitting of retainer
 MB990890	MB990890 or MB990891	Rear suspension bushing base	Press-fitting of bearing outer race

Attached sheet 3(2/3)

Insert the attached sheet 3(3/3)

⚠ CAUTION
Be careful not to damage the bearing case and the axle shaft.

3. As shown in the figure, hold the axle shaft. Using a grinder, shave off a point of its circumference locally until the wall thickness become as follows:
   - 1.0 – 1.5 mm for axle shaft side
   - 2.0 mm for bearing side

⚠ CAUTION
Be careful not to damage the bearing case and the axle shaft.

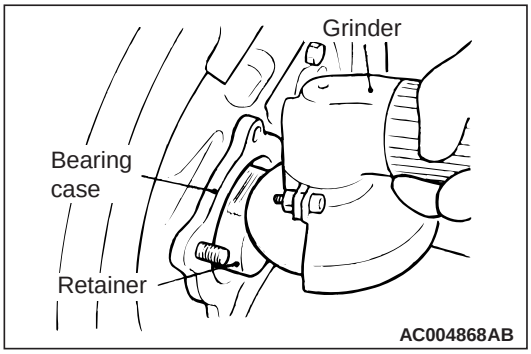

4. Fix the axle shaft and shave off the remaining 2.0 mm on the side of the retainer bearing.

⚠ CAUTION
Be careful not to damage the axle shaft.

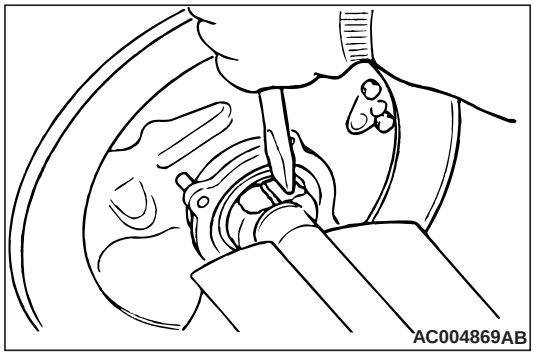

5. Cut in with a chisel the place where the retainer ring has been shaven and remove the retainer ring.

<<B>> AXLE SHAFT REMOVAL <Old>

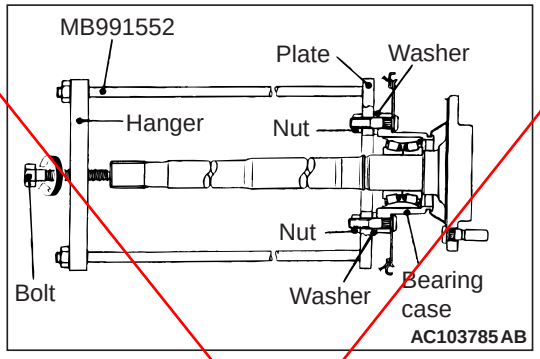

1. Secure special tool axle shaft bearing and case remover (MB991552) to the bearing case bolts with the nuts and adjust the height of the hanger. Then install the washers, plate and nuts in that order.

   NOTE: The washers are used to eliminate the difference in height of the bearing case so that the plate and the bearing case are parallel.

⚠ CAUTION
The hanger and plate should be placed so that they are parallel.

2. Place the end of the bolt against the center of the axle shaft, and then tighten the bolt to remove the axle shaft from the bearing case assembly.

<<C>> OUTER BEARING INNER RACE REMOVAL

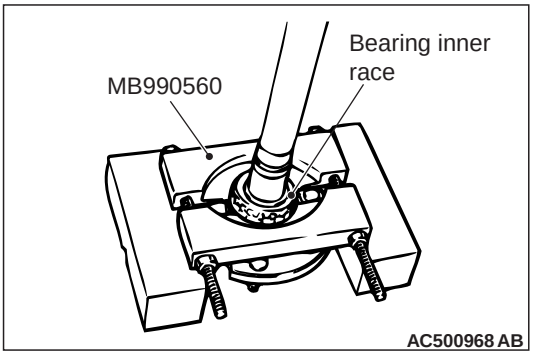

Install special tool rear axle shaft bearing remover (MB990560) as shown in the illustration, and then use a press to remove the outer bearing inner race from the axle shaft.

<New>

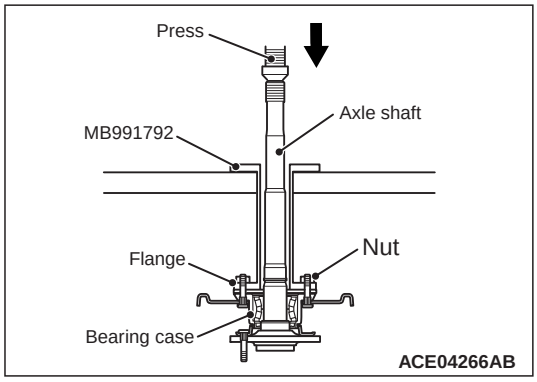

1. Secure special tool axle shaft bearing case remover (MB991792) to the bearing case bolt with the nut.

   The flange on the special tool should be parallel with the bearing case.If not, add washer(s) between them.
2. Drive out the axle shaft from the bearing case with a press as shown.

<New>

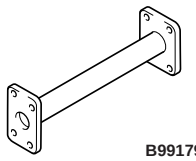 B991792	MB991792	Axle shaft bearing case remover	Removal of the axle shaft bearing and bearing case

Tool	Number	Name	Use
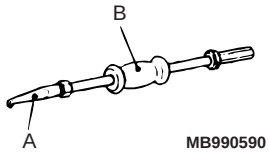 B A MB990590	MB990590 A: MB990212 B: MB990211	Rear axle shaft oil seal remover A: Adapter B: Slide hammer	• Removal of axle shaft (use together with MB990241, MB990211) • Removal of axle housing oil seal
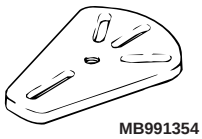 MB991354	MB991354	Puller body	Removal of axle shaft (use together with MB990211)
 MB990241	MB990241	Rear axle shaft puller	Removal of axle shaft (use together with MB990211)
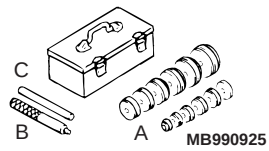 C B A MB990925 <Old>	MB990925 A: MB990932, MB990936 B: MB990938 C: MB990939	Bearing and oil seal installer set A: Installer adapter B: Installer bar C: Remover bar	• Installation of axle housing oil seal • Press-fitting of bearing outer race For details of each installer, refer to GROUP 26 – Special Tools .
 MB991522	MB991552	Axle shaft bearing and case remover	Removal of the axle shaft bearing and bearing case
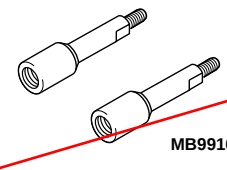 MB991601	MB991601	Extension bar	Removal of the axle shaft bearing and bearing case
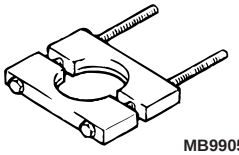 MB990560	MB990560	Rear axle shaft bearing remover	Removal of bearing inner race

Insert the attached sheet 4(3/3)

2. Apply gummed cloth tape around the edge of the bearing case for protection.

⚠ CAUTION
Be careful not to damage the bearing case and the axle shaft.

3. As shown in the figure, hold the axle shaft. Using a grinder, shave off a point of its circumference locally until the wall thickness become as follows:
   - 1.0 – 1.5 mm for axle shaft side
   - 2.0 mm for bearing side

⚠ CAUTION
Be careful not to damage the bearing case and the axle shaft.

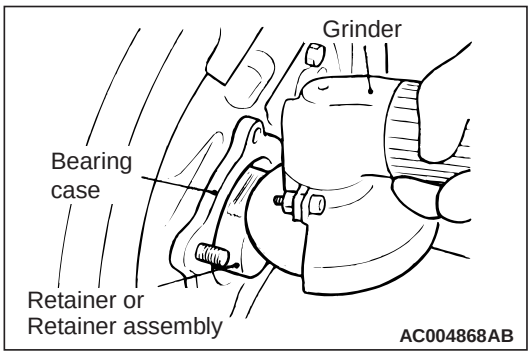

4. Fix the axle shaft and shave off the remaining 2.0 mm on the side of the retainer <Vehicles without ABS> or Retainer assembly <Vehicles with ABS>.

⚠ CAUTION
Be careful not to damage the axle shaft.

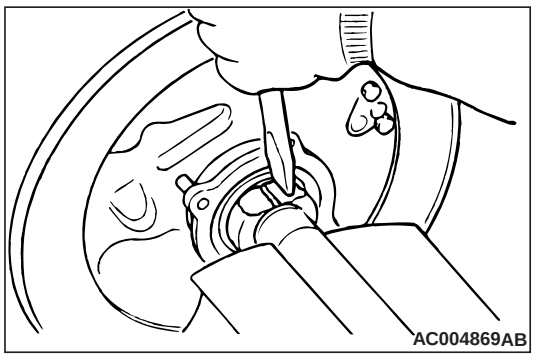

5. Cut in with a chisel the place where the retainer <Vehicles without ABS> or Retainer assembly <Vehicles with ABS> has been shaven and remove the retainer <Vehicles without ABS> or Retainer assembly <Vehicles with ABS>.

<<B>> AXLE SHAFT REMOVAL <Old>

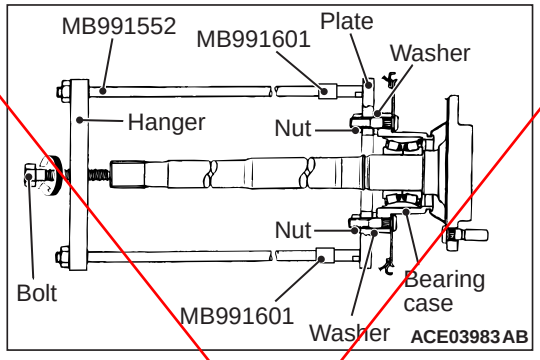

1. Secure special tool axle shaft bearing and case remover (MB991552) and extension bar (MB991601) to the bearing case bolts with the nuts and adjust the height of the hanger. Then install the washers, plate and nuts in that order.

   NOTE: The washers are used to eliminate the difference in height of the bearing case so that the plate and the bearing case are parallel.

⚠ CAUTION
The hanger and plate should be placed so that they are parallel.

2. Place the end of the bolt against the centre of the axle shaft, and then tighten the bolt to remove the axle shaft from the bearing case assembly.

<<C>> OUTER BEARING INNER RACE REMOVAL

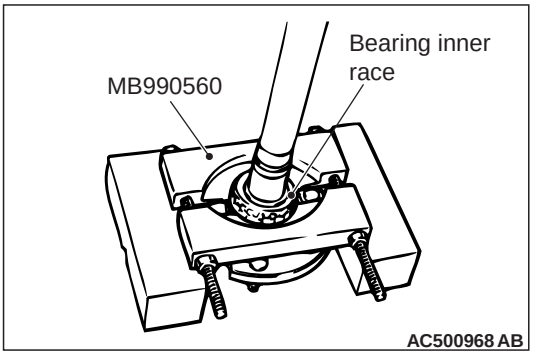

Install special tool rear axle shaft bearing remover (MB990560) as shown in the illustration, and then use a press to remove the outer bearing inner race from the axle shaft.

<New>

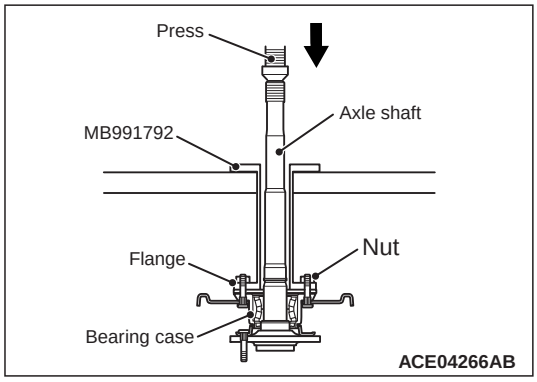

1. Secure special tool axle shaft bearing case remover (MB991792) to the bearing case bolt with the nut.

   The flange on the special tool should be parallel with the bearing case.If not, add washer(s) between them.
2. Drive out the axle shaft from the bearing case with a press as shown.