SERVICE BULLETIN

MITSUBISHI MOTORS

GLOBAL AFTER SALES OFFICE, MITSUBISHI MOTORS CORPORATION

PURPOSE : CHANGE	ISSUE NO. : MSB-15EXML34-001	DATE : 2015-03-16
SUBJECT : Changes of the replacement procedure of the trailing arm bushing due to the change of its shape		<DESTINATION/MODEL> (As per attached sheet 1) <M/Y> 08-13
GROUP : Gr:34(Rear suspension)		OUTLANDER(CW0W)/PEUGEOT:4007 (CG0W)/CITROEN C-CROSSER(CH7W)

1. Description :

Please refer to the attached document for the information about the change of mention in the applicable service manual.

2. Affected service manuals :

Please refer to the attached document (Attached sheet 1)

3. About the details :

Please refer to the attached document (Attached sheet 3-14)

4. Effective time : From the vehicles produced from early of Dec, 2012

Attached sheet 1

For overseas market

<MMNA/MEXICO>

Applicable manual	Pub. No.	Applicable title (INFO-ID)	Contents
2013 OUTLANDER Service Manual	<MMNA> MSCD-007B-2013 <MEXICO> DRAFT	SPECIAL TOOLS (M341-00-060-80801-01)	Attached sheet 3
		TRAILING ARM BUSHING REPLACEMENT (M341-01-130-45801-01) <2.4L ENGINE: 5 PERSONS SEAT>	Attached sheet 4
		TRAILING ARM BUSHING REPLACEMENT (M341-01-130-43601-01) <2.4L ENGINE: 7PERSONS SEAT, 3.0L ENGINE>	Attached sheet 5

<EU/RUSSIA>

Applicable manual	Pub. No.	Applicable title (INFO-ID)	Contents
2012 OUTLANDER Workshop Manual	<EU> CGXE12E1-CD (ENG) CGXF12E1-CD (FRE) CGXG12E1-CD (GER) CGXS12E1-CD (SPA) <RUSSIA>N/A	SPECIAL TOOLS (M341-00-060-74502-01)	Attached sheet 6
		TRAILING ARM BUSHING REPLACEMENT (M341-01-130-59900-01) <VEHICLES WITH ALLOY MADE TRAILING ARM>	Attached sheet 7
		TRAILING ARM BUSHING REPLACEMENT (M341-01-130-58800-01) <VEHICLES WITH SHEET METAL MADE TRAILING ARM>	Attached sheet 8
2010 4007 (PEUGEOT)/ C-Crosser (CITROEN) Workshop Manual	RUSSIA:N/A	SPECIAL TOOLS (M341-00-060-74502-01)	Attached sheet 9
		TRAILING ARM BUSHING REPLACEMENT (M341-01-130-36202-01)	Attached sheet 10
2011 4007 (PEUGEOT)/ C-Crosser (CITROEN) Workshop Manual	RUSSIA:N/A	SPECIAL TOOLS (M341-00-060-74502-01)	Attached sheet 6
		TRAILING ARM BUSHING REPLACEMENT (M341-01-130-58800-01) <VEHICLES WITH SHEET METAL MADE TRAILING ARM>	Attached sheet 8

<G.EXP/GCC/ MMAL/NZ>

Applicable manual	Pub. No.	Applicable title (INFO-ID)	Contents
2010 OUTLANDER Workshop Manual	<G.EXP,GCC> PWRE0906R (ENG) PWRS0907R (SPA) <MMAL> MR936925 <NZ> DRAFT	SPECIAL TOOLS (M341-00-060-74502-01)	Attached sheet 6
		TRAILING ARM BUSHING REPLACEMENT (M341-01-130-56601-01) <VEHICLES WITH 5 PERSONS SEAT (EXCEPT FOR GCC-HIGH GROUND CLEARANCE SUSPENSION AND AUSTRALIA)>	Attached sheet 11
		TRAILING ARM BUSHING REPLACEMENT (M341-01-130-57701-01) <VEHICLES WITH 5 PERSONS SEAT (FOR GCC-HIGH GROUND CLEARANCE SUSPENSION AND AUSTRALIA), VEHICLES WITH 7 PERSONS SEAT>	Attached sheet 12

<G.EXP (JAPAN SPEC)>

Applicable manual	Pub. No.	Applicable title (INFO-ID)	Contents
2008 OUTLANDER Workshop Manual	PWRE0712R	SPECIAL TOOLS (M341-00-060-76703-01)	Attached sheet 13
		TRAILING ARM BUSHING REPLACEMENT (M341-01-130-38401-01)	Attached sheet 14

Attached sheet 3(1/2)

<New>
Insert the attached sheet 3(2/2)

Tool <Old>	Tool number and name	Supersession	Application
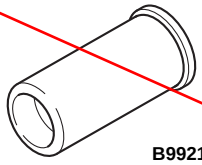 B992121	MB992121 Arm bushing remover and installer	–	Trailing arm bushing removal and press-fit
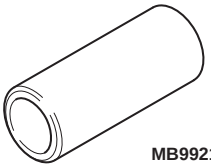 MB992125	MB992125 Arm bushing base	–	
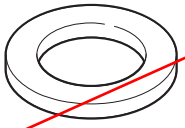 MB992175	MB992175 Base spacer	–	
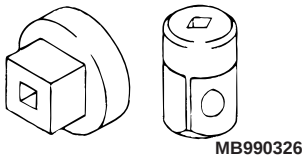 MB990326	MB990326 Preload socket	General service tool	Stabilizer link ball joint rotation torque measurement
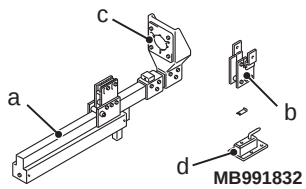 MB991832	MB991832 Spring compressor set a: MB991793 Spring compressor assembly b: MB991796 Attachment B c: MB991794 Upper plate d: MB991830 Fixture	General service tool	Rear coil spring compression

ON-VEHICLE SERVICE

REAR WHEEL ALIGNMENT CHECK AND ADJUSTMENT

M1341011000930

1. Before the wheel alignment measurement, adjust the rear suspension, wheel, and tires in good condition.
2. Park the vehicle on a level surface to measure the wheel alignment.

TOE-IN

Standard value: 3 ± 2 mm (0.12 ± 0.08 inch)

Tool	Tool number and name	Supersession	Application
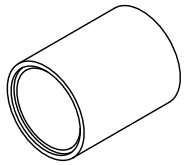	MB991523 Remover base	–	Trailing arm bushing removal and press-fit
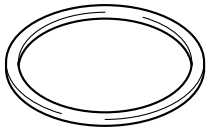 B992865	MB992865 Spacer base	–	
 MB990890	MB990890 Rear suspension bushing base	General service tool	
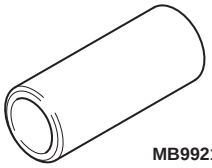 MB992125	MB992125 Arm bushing base	–	
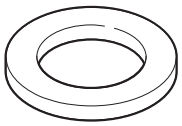 MB992175	MB992175 Base spacer	–	

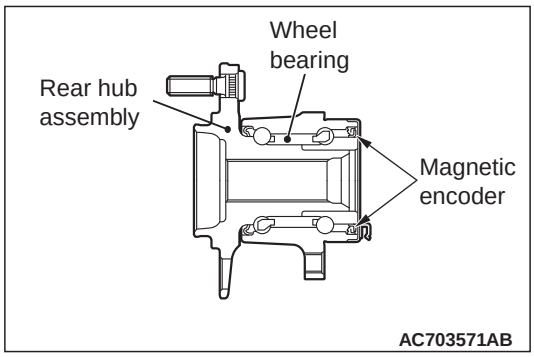

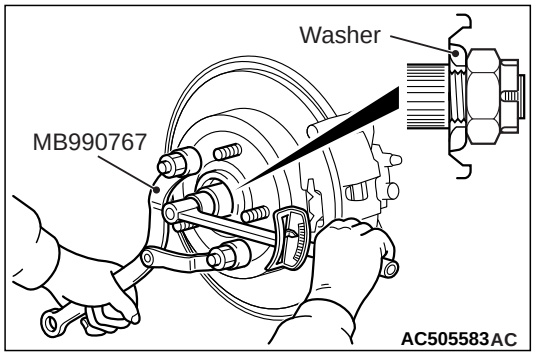

>>B<< WASHER/DRIVESHAFT NUT INSTALLATION

⚠ CAUTION

- **Because the wheel speed detection magnetic encoder is magnetized, it collects metallic particles easily. Make sure that the magnetic encoder does not collect metallic particles. Check that there is not any trouble prior to reassembling it.**
- **When installing the drive shaft, make sure that it does not contact with the wheel speed detection magnetic encoder (integrated with the inner oil seal) to avoid damage.**
- **Do not apply the vehicle weight on the rear wheel hub assembly before fully tightening the driveshaft nuts. Otherwise, the wheel bearing will be broken.**

1. Incorporate the driveshaft washer as shown in the figure.
2. Use special tool MB990767 to tighten the driveshaft nuts. At this time, tighten the nuts within the specified torque range considering the final tightening.

   Tightening torque: 144 – 176 N·m (107 – 129 ft-lb)
3. If the pin holes do not align with the pins, tighten the driveshaft nut [less than 200 N·m (147 ft-lb)] and find the nearest hole then bend the cotter pin to fit it.

INSPECTION

M1341002300290

- Check the bushings for wear and deterioration.
- Check the trailing arm for bending or damage.

<Old>

~~**TRAILING ARM BUSHING REPLACEMENT <2.4L ENGINE: 5 PERSONS SEAT>**~~

~~**Required Special Tools:**~~

- ~~MB992121: Arm Bushing Remover and Installer~~
- ~~MB992125: Arm Bushing Base~~

<New>

Insert the attached sheet 4(4/5) and 4(5/5)

<Old>

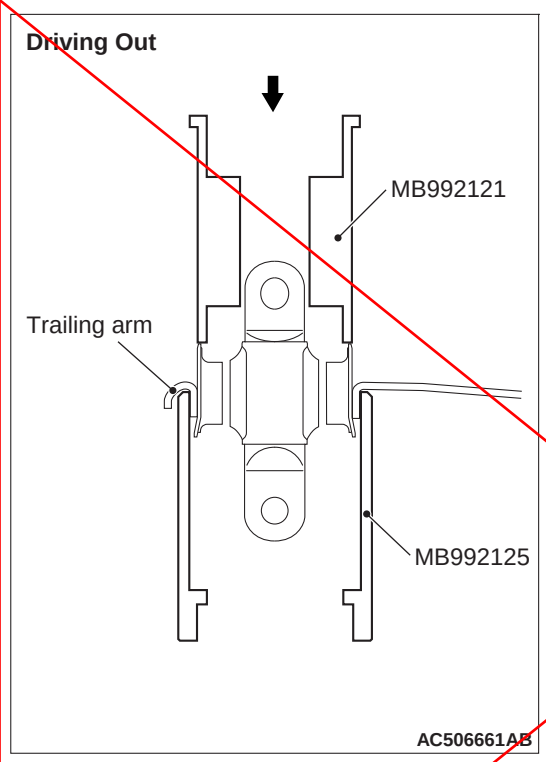

1. Use the special tools MB992121 and MB992125 to remove the trailing arm bushing:

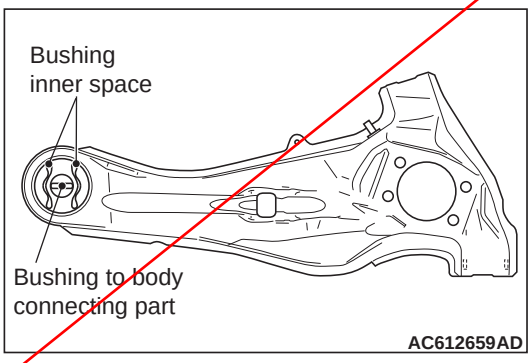

2. Determine the installation direction and the installation position of the trailing arm bushing.
   (1) Install so that the protruding side of the trailing arm bushing inner pipe faces inside the body.
   (2) Position horizontally the trailing arm bushing to body connecting part, and locate bushing inner space as shown in the figure.

<New>

Insert the attached sheet 4(4/5) and 4(5/5)

<Old>

Attached sheet 4 (3/5)

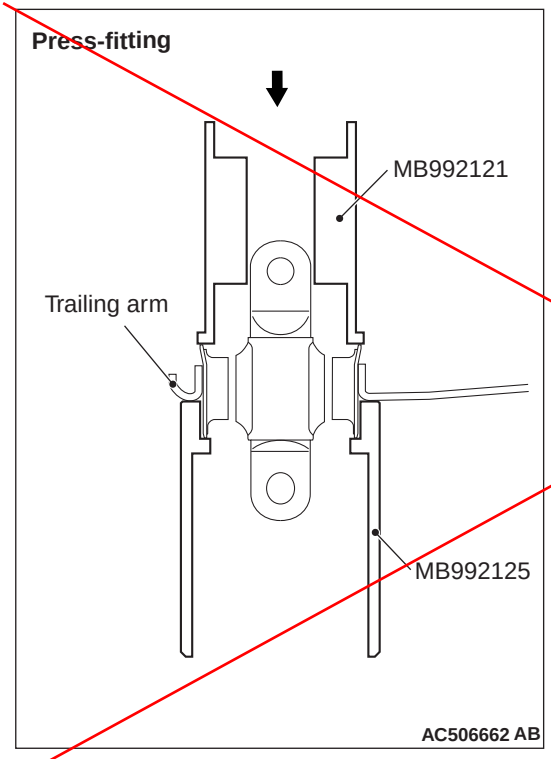

3. Use the special tools MB992121 and MB992125 to press-fit the trailing arm bushing up to the position shown in the figure:

<New>

Insert the attached sheet 4(4/5) and 4(5/5)

TRAILING ARM BUSHING REPLACEMENT <2.4L ENGINE: 5 PERSONS SEAT>

Required Special Tools:

- MB991523: Remover Base
- MB992865: Spacer Base
- MB992125: Arm Bushing Base
- MB990890: Rear Suspension Bushing Base

⚠ CAUTION

The trailing arm bushing can be replaced only once. If the bushing is replaced multiple times, the drawing force of bushing may become reduced.

1. Use the special tools MB991523, MB992865 and MB992125 to remove the trailing arm bushing.

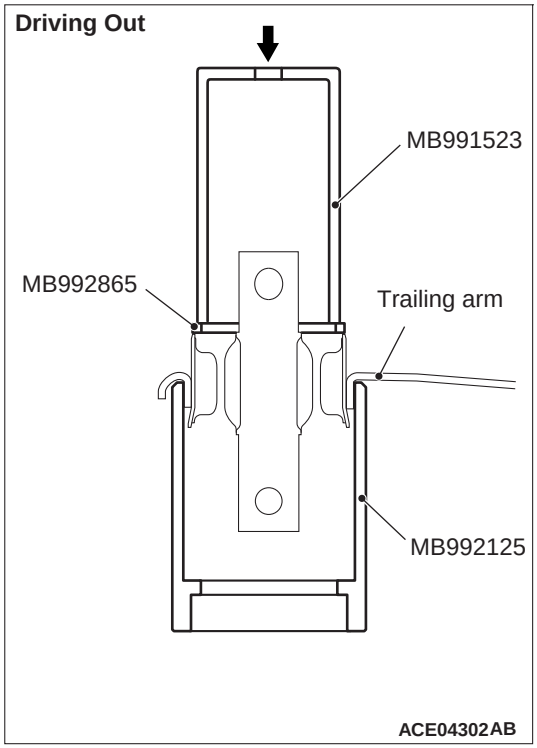

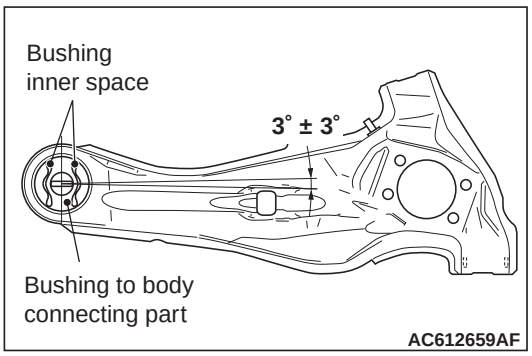

2. Determine the installation direction and the installation position of the trailing arm bushing.
   (1) Install so that the protruding side of the trailing arm bushing inner pipe faces inside the body.
   (2) Position horizontally the trailing arm bushing to body connecting part, and locate bushing inner space as shown in the figure.

Press-fitting

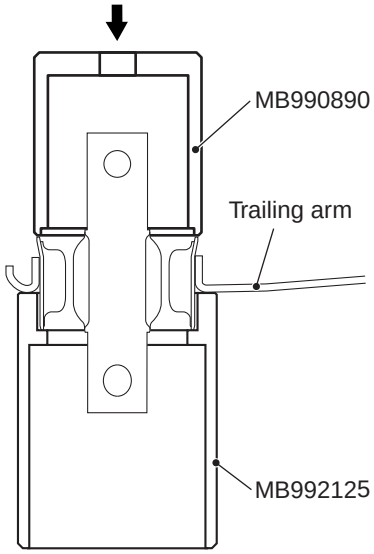

ACE04304AB

3. Use the special tools MB990890 and MB992125 to press-fit the trailing arm bushing up to the position shown in the figure.

<Old>

Attached sheet 5 (1/4)

TRAILING ARM BUSHING REPLACEMENT <2.4L ENGINE: 7PERSONS SEAT, 3.0L ENGINE>

Required Special Tools:

- MB992121: Arm Bushing Remover and Installer
- MB992125: Arm Bushing Base
- MB992175: Base Spacer

1. Use the special tools MB992121 and MB992125 to remove the trailing arm bushing.

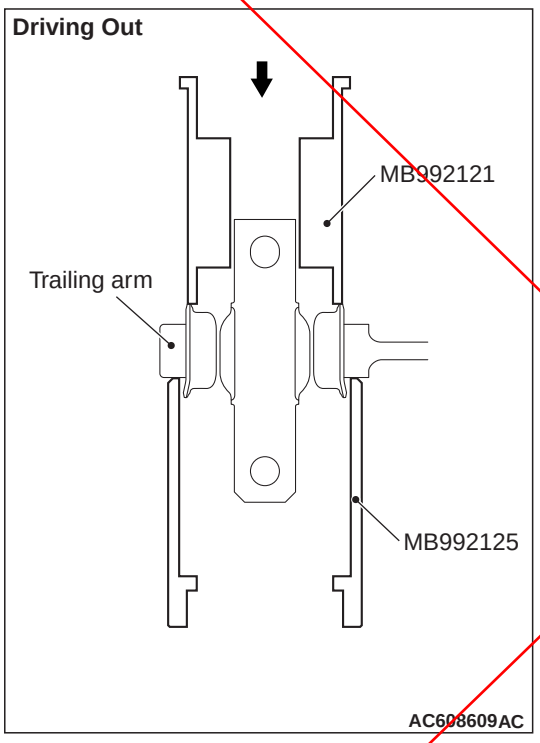

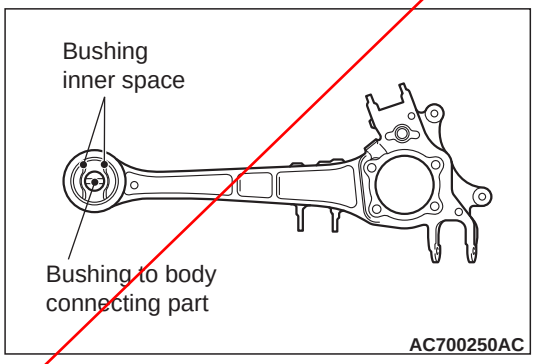

2. Determine the installation direction and the installation position of the trailing arm bushing.
   (1) Install so that the protruding side of the trailing arm bushing inner pipe faces inside the body.
   (2) Position horizontally the trailing arm bushing to body connecting part, and locate bushing inner space as shown in the figure.

<New>

Insert the attached sheet 5(3/4) and 5(4/4)

<Old>

Attached sheet 5 (2/4)

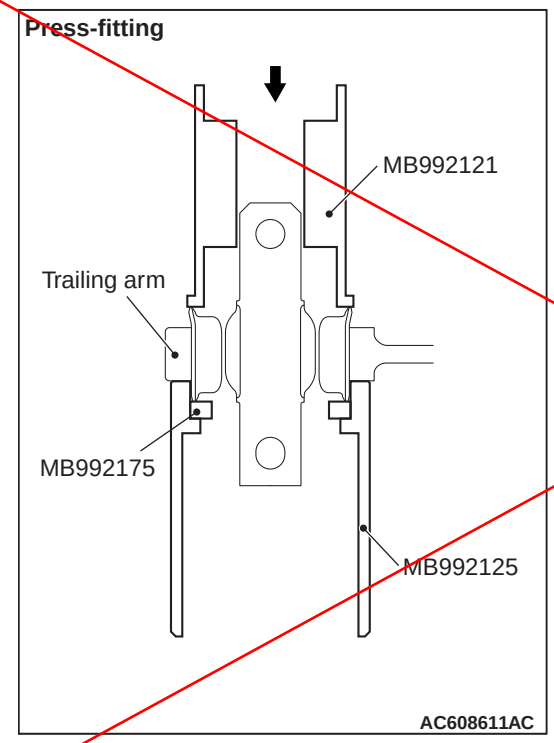

3. Use the special tools MB992121, MB992125 and MB992175 to press-fit the trailing arm bushing up to the position shown in the figure.

<New>

Insert the attached sheet 5(3/4) and 5(4/4)

TRAILING ARM BUSHING REPLACEMENT <2.4L ENGINE: 7PERSONS SEAT, 3.0L ENGINE>

Required Special Tools:

- MB991523: Remover Base
- MB992865: Spacer Base
- MB992125: Arm Bushing Base
- MB990890: Rear Suspension Bushing Base
- MB992175: Base Spacer

1. Use the special tools MB991523, MB992865 and MB992125 to remove the trailing arm bushing.

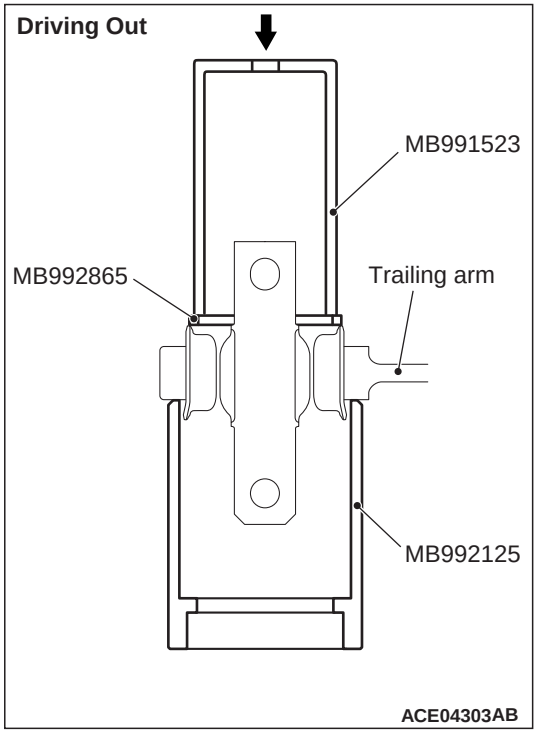

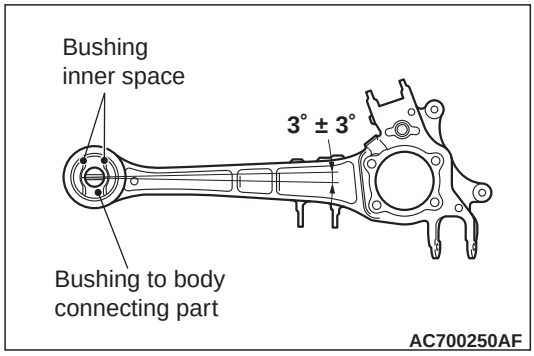

2. Determine the installation direction and the installation position of the trailing arm bushing.
   (1) Install so that the protruding side of the trailing arm bushing inner pipe faces inside the body.
   (2) Position horizontally the trailing arm bushing to body connecting part, and locate bushing inner space as shown in the figure.

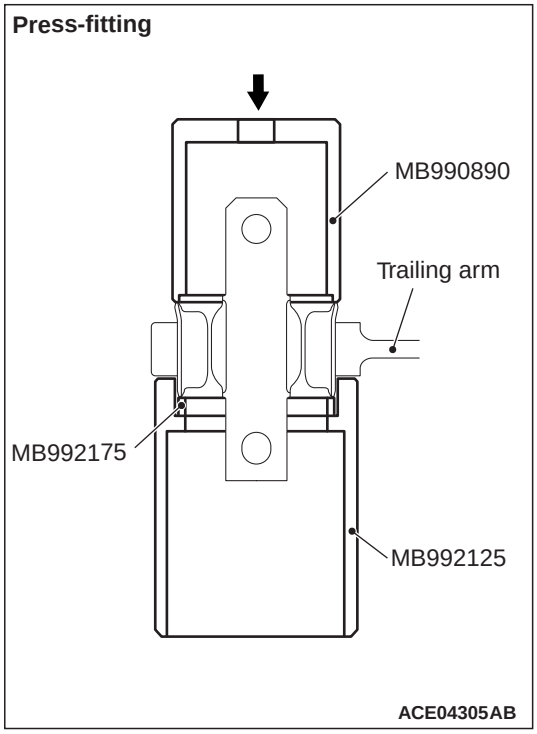

3. Use the special tools MB990890, MB992175 and MB992125 to press-fit the trailing arm bushing up to the position shown in the figure.

Attached sheet 6(1/2)

Tool	Number	Name	Use
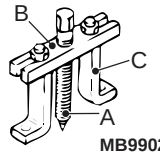 MB990241AK	MB990241 A:MB990242 B:MB990243 C:MB990244	Axle shaft puller A: Puller shaft B: Puller body C: Puller bar	Rear hub assembly removal
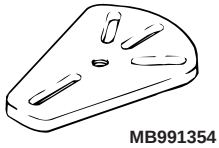 MB991354	MB991354	Puller body	
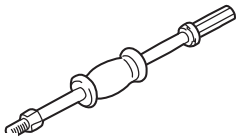 MB990211	MB990211	Slide hammer	
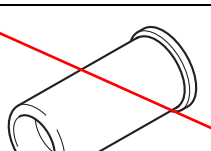 B992121	MB992121	Arm bushing remover and installer	Trailing arm bushing removal and press-fit
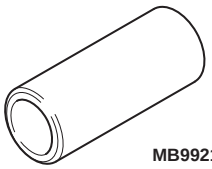 MB992125	MB992125	Arm bushing base	
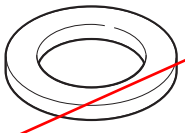 MB992175	MB992175	Base spacer	
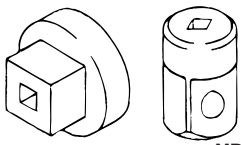 MB990326	MB990326	Preload socket	Stabilizer link ball joint rotation torque measurement
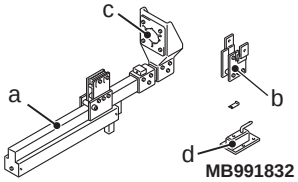 MB991832	MB991832 a: MB991793 b: MB991796 c: MB991794 d: MB991830	Spring compressor set a: Spring compressor assembly b: Attachment B c: Upper plate d: Fixture	Coil spring removal and installation

<Old>

<New>
Insert the attached sheet 6(2/2)

Tool	Number	Name	Use
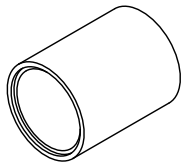	MB991523	Remover base	Trailing arm bushing removal and press-fit
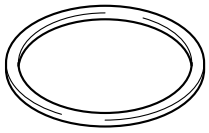 B992865	MB992865	Spacer base	
 MB990890	MB990890	Rear suspension bushing base	
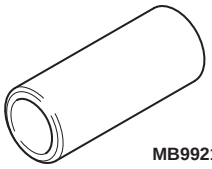 MB992125	MB992125	Arm bushing base	
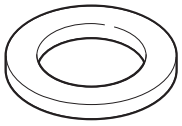 MB992175	MB992175	Base spacer	

>>B<< WASHER/DRIVESHAFT NUT INSTALLATION

⚠ CAUTION

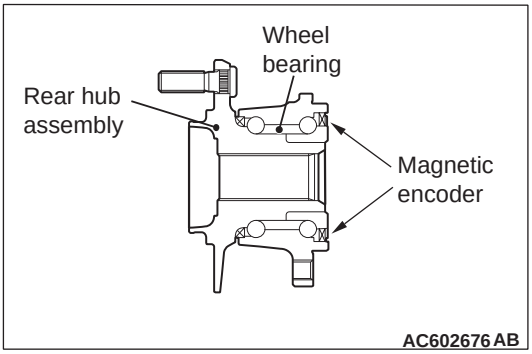

The wheel speed detection magnetic encoder collects metallic particles easily, because it is magnetised. Make sure that the magnetic encoder should not collect metallic particles. Check that there is not any trouble prior to reassembling it.

- **When installing the driveshaft, make sure that it does not contact with the wheel speed detection magnetic encoder (integrated with the inner oil seal) to avoid damage.**
- **Do not apply the vehicle weight on the rear wheel hub assembly before fully tightening the driveshaft nuts. Otherwise, the wheel bearing will be broken.**

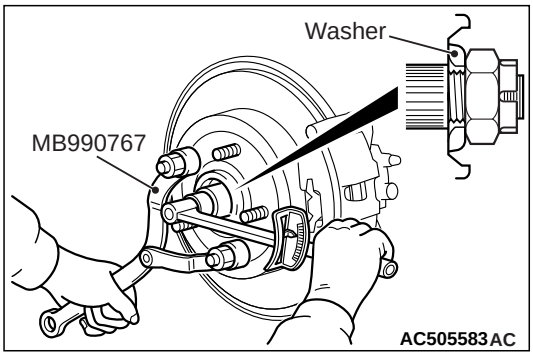

1. Incorporate the driveshaft washer as shown in the figure.
2. Using special tool front hub and flange yoke holder (MB990767), tighten the driveshaft nuts to the specified torque. At this time, tighten the nuts within the specified torque range considering the final tightening.

   Tightening torque: 144 – 176 N·m
3. If the pin holes do not align with the pins, tighten the driveshaft nut (less than 200 N·m) and find the nearest hole then bend the split pin to fit it.

INSPECTION

M1341002300290

- Check the bushings for wear and deterioration.

<Old>

- Check the trailing arm for bending or damage.

TRAILING ARM BUSHING REPLACEMENT <VEHICLES WITH ALLOY MADE TRAILING ARM>

⚠ CAUTION

The trailing arm bushing can be replaced only once. If the bushing is replaced multiple times, the drawing force of bushing may become reduced.

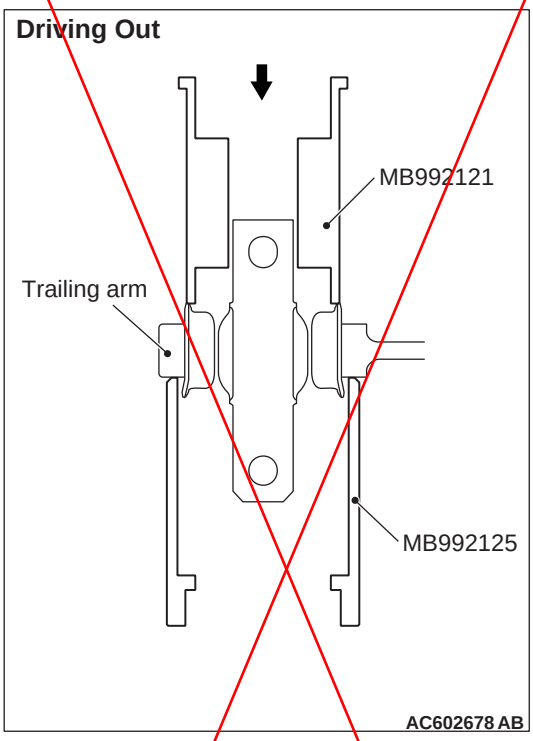

1. Use the following special tools to remove the trailing arm bushing:
   - Arm bushing remover and installer (MB992121)
   - Arm bushing base (MB992125)

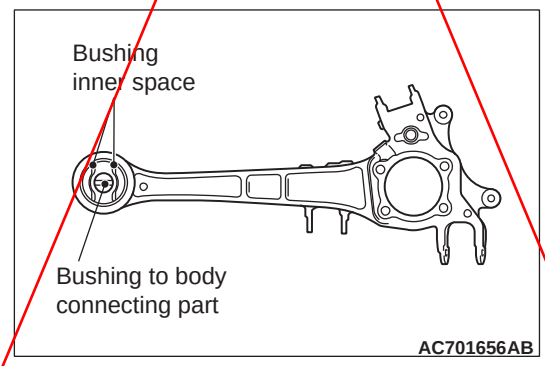

2. Determine the installation direction and the installation position of the trailing arm bushing.
   (1) Install so that the protruding side of the trailing arm bushing inner pipe faces inside the body.

<New>

Insert the attached sheet 7(3/3)

<Old>

Attached sheet 7(2/3)

(2) Position horizontally the trailing arm bushing to body connecting part, and locate bushing inner space as shown in the figure.

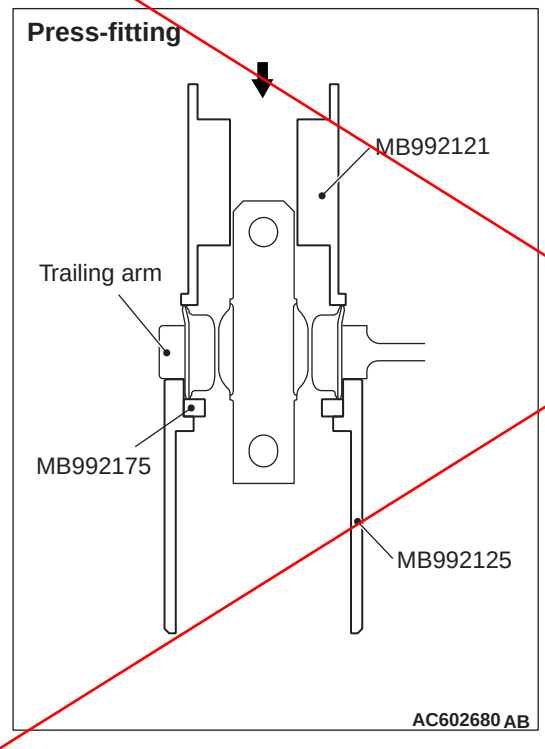

3. Use the following special tools to press-fit the trailing arm bushing up to the position shown in the figure:
   - Arm bushing remover and installer (MB992121)
   - Arm bushing base (MB992125)
   - Base spacer (MB992175)

<New>

Insert the attached sheet 7(3/3)

TRAILING ARM BUSHING REPLACEMENT <VEHICLES WITH ALLOY MADE TRAILING ARM>

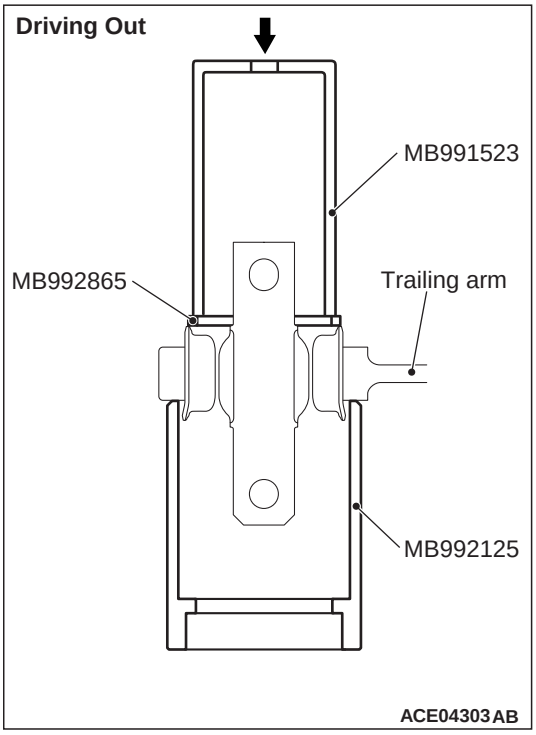

1. Use the following special tools to remove the trailing arm bushing:
   - Remover base (MB991523)
   - Spacer base (MB992865)
   - Arm bushing base (MB992125)

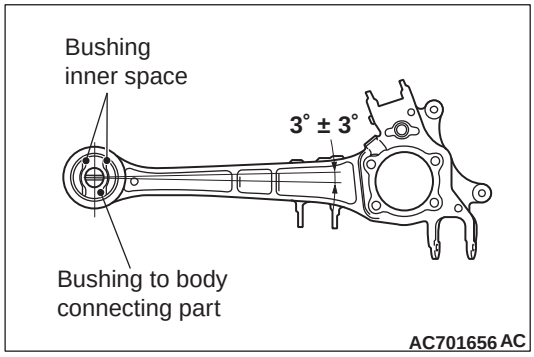

2. Determine the installation direction and the installation position of the trailing arm bushing.
   (1) Install so that the protruding side of the trailing arm bushing inner pipe faces inside the body.
   (2) Position horizontally the trailing arm bushing to body connecting part, and locate bushing inner space as shown in the figure.

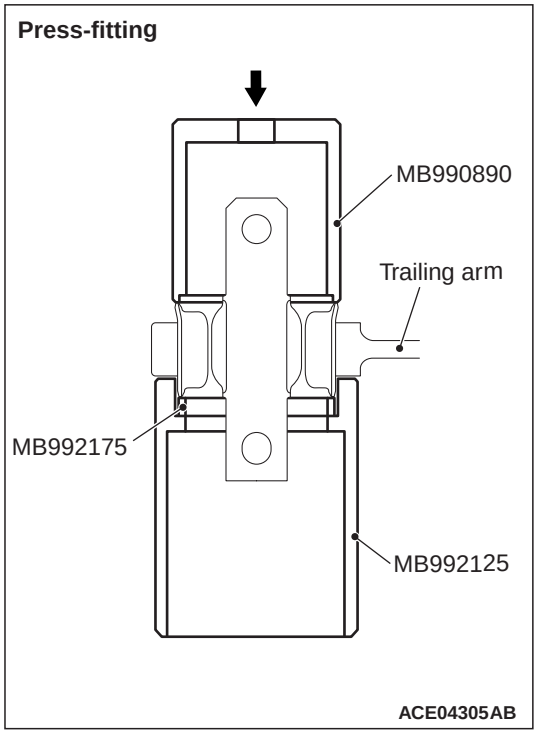

3. Use the following special tools to press-fit the trailing arm bushing up to the position shown in the figure:
   - Rear suspension bushing base (MB990890)
   - Spacer base (MB992175)
   - Arm bushing base (MB992125)

Attached sheet 8(1/2)

<Old>

TRAILING ARM BUSHING REPLACEMENT <VEHICLES WITH SHEET METAL MADE TRAILING ARM>

M1341011300588

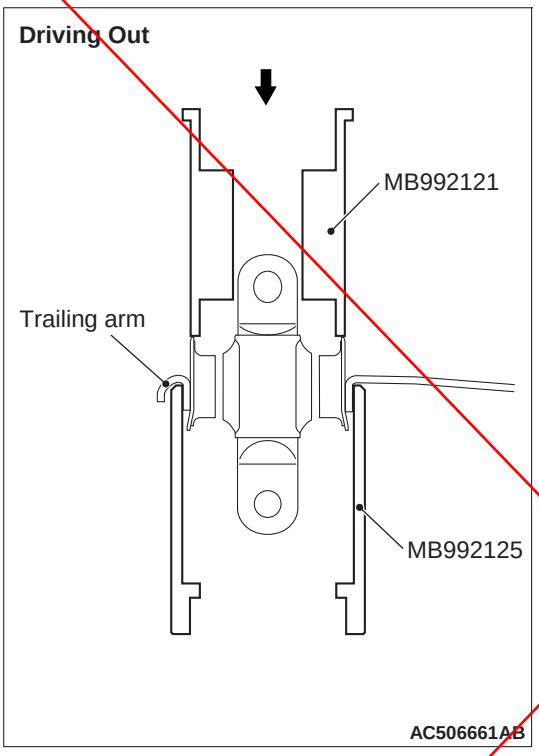

1. Use the following special tools to remove the trailing arm bushing:
   - Arm bushing remover and installer (MB992121)
   - Arm bushing base (MB992125)

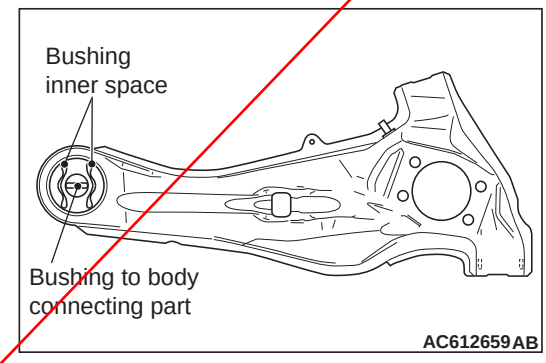

2. Determine the installation direction and the installation position of the trailing arm bushing.
   (1) Install so that the protruding side of the trailing arm bushing inner pipe faces inside the body.
   (2) Position horizontally the trailing arm bushing to body connecting part, and locate bushing inner space as shown in the figure.

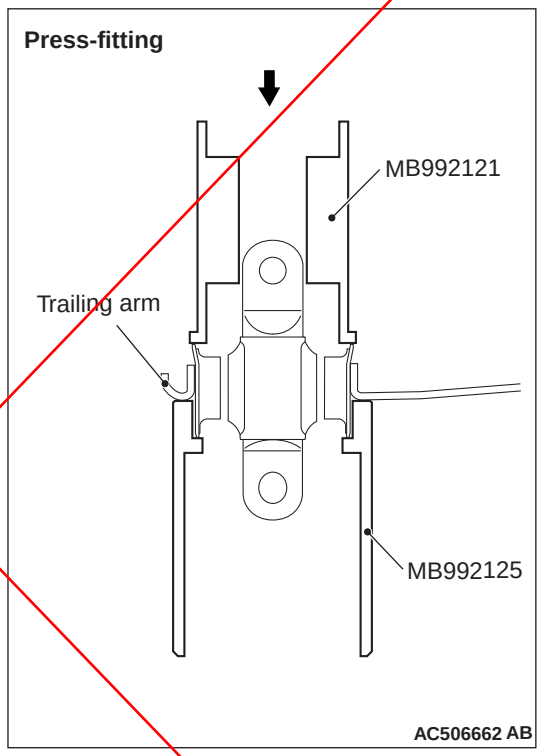

3. Use the following special tools to press-fit the trailing arm bushing up to the position shown in the figure:
   - Arm bushing remover and installer (MB992121)
   - Arm bushing base (MB992125)

<New>

Insert the attached sheet 8(2/2)

TRAILING ARM BUSHING REPLACEMENT <VEHICLES WITH SHEET METAL MADE TRAILING ARM>

⚠ CAUTION

The trailing arm bushing can be replaced only once. If the bushing is replaced multiple times, the drawing force of bushing may become reduced.

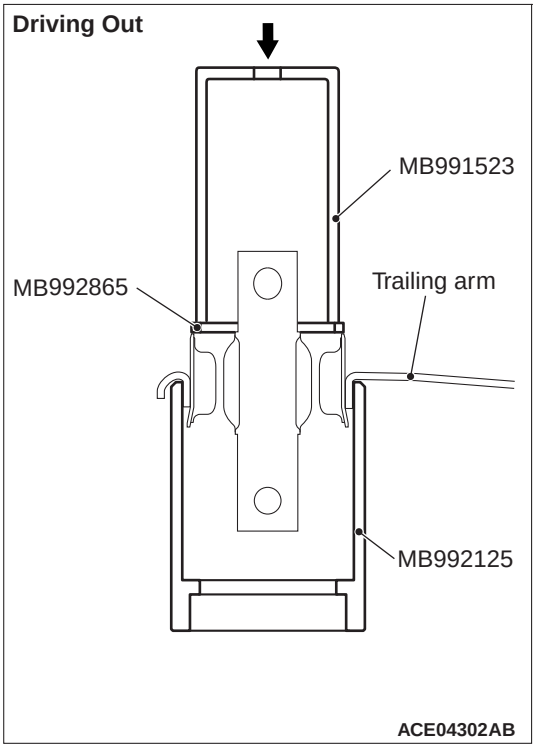

1. Use the following special tools to remove the trailing arm bushing:
   - Remover base (MB991523)
   - Spacer base (MB992865)
   - Arm bushing base (MB992125)

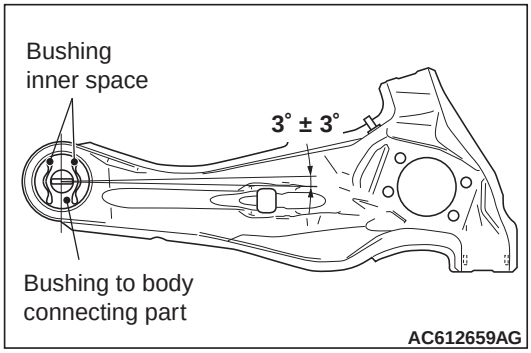

2. Determine the installation direction and the installation position of the trailing arm bushing.
   (1) Install so that the protruding side of the trailing arm bushing inner pipe faces inside the body.
   (2) Position horizontally the trailing arm bushing to body connecting part, and locate bushing inner space as shown in the figure.

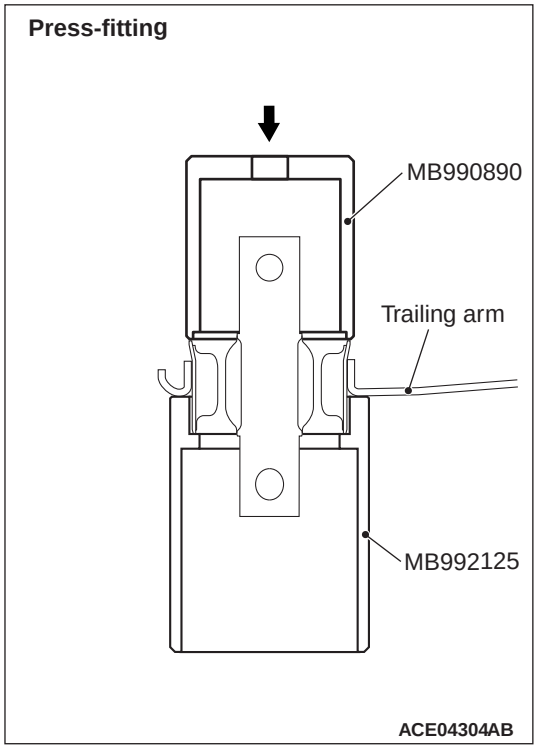

3. Use the following special tools to press-fit the trailing arm bushing up to the position shown in the figure:
   - Rear suspension bushing base (MB990890)
   - Arm bushing base (MB992125)

<New>
Insert the attached sheet 9(2/2)

Attached sheet 9(1/2)

<Old>

Tool	Number	Name	Use
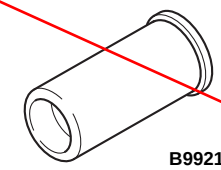 B992121	MB992121	Arm bushing remover and installer	Trailing arm bushing removal and press-fit
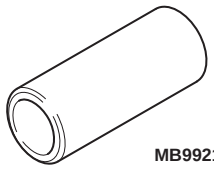 MB992125	MB992125	Arm bushing base	
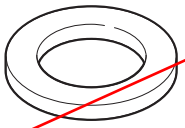 MB992175	MB992175	Base spacer	
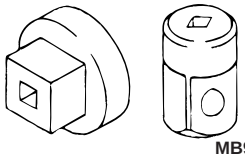 MB990326	MB990326	Preload socket	Stabilizer link ball joint rotation torque measurement

ON-VEHICLE SERVICE

REAR WHEEL ALIGNMENT CHECK AND ADJUSTMENT

M1341011001074

1. Before the wheel alignment measurement, adjust the rear suspension, wheel, and tyres in good condition.
2. Park the vehicle on a level surface to measure the wheel alignment.

TOE-IN

Standard value:
At the centre of tyre tread: 3 ± 2 mm
Toe-angle (per wheel): 0 ° 02’ – 0 ° 12’

If it is out of the standard range, adjust as follows:

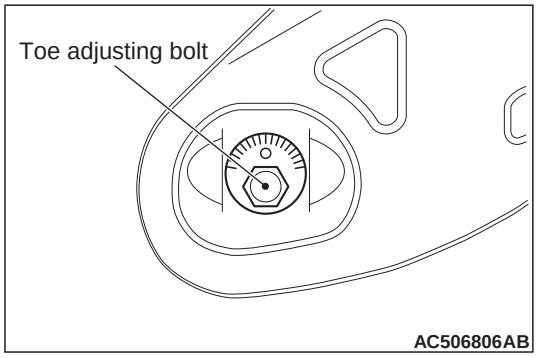

Turn the toe adjusting bolt (the mounting bolt inside the body on the control link) to adjust.

Left wheels: Clockwise (+) Toe in
Right wheels: Clockwise (–) Toe in

Toe-in varies approximately 2.6 mm (equivalent to 0°16' of the toe angle for one side) for each scale mark.

CAMBER

Standard value: –0°25' ±0°30' (difference between right and left within 0°30')

Tool	Number	Name	Use
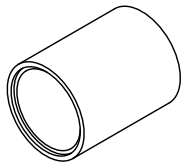	MB991523	Remover base	Trailing arm bushing removal and press-fit
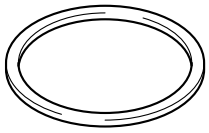 B992865	MB992865	Spacer base	
 MB990890	MB990890	Rear suspension bushing base	
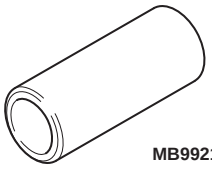 MB992125	MB992125	Arm bushing base	
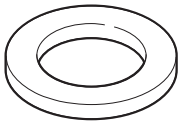 MB992175	MB992175	Base spacer	

<Old>

TRAILING ARM BUSHING REPLACEMENT

M1341011300362

⚠ CAUTION

The trailing arm bushing can be replaced only once. If the bushing is replaced multiple times, the drawing force of bushing may become reduced.

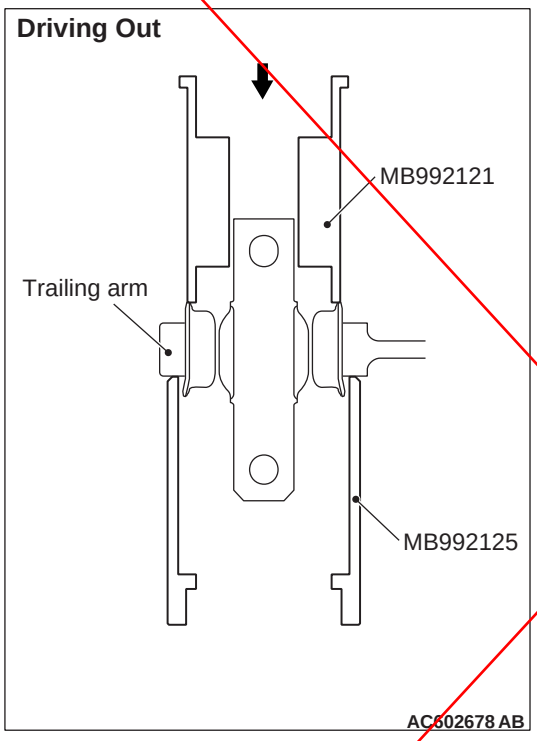

1. Use the following special tools to remove the trailing arm bushing:
   - Arm bushing remover and installer (MB992121)
   - Arm bushing base (MB992125)

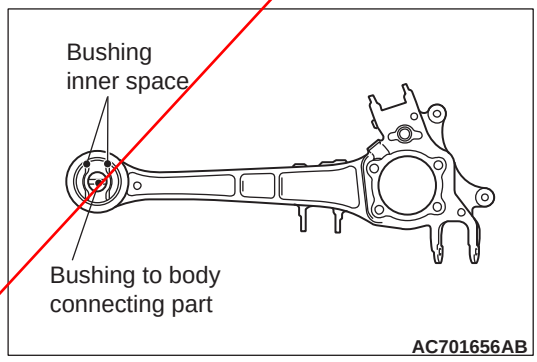

2. Determine the installation direction and the installation position of the trailing arm bushing.
   (1) Install so that the protruding side of the trailing arm bushing inner pipe faces inside the body.
   (2) Position horizontally the trailing arm bushing to body connecting part, and locate bushing inner space as shown in the figure.

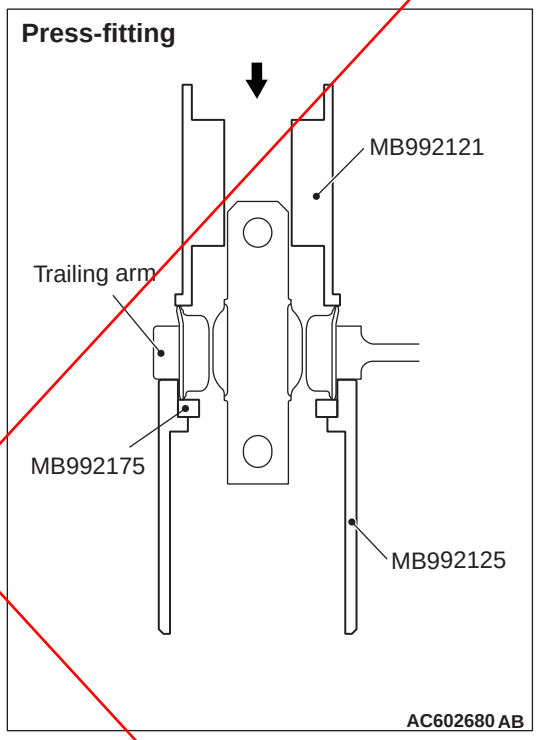

3. Use the following special tools to press-fit the trailing arm bushing up to the position shown in the figure:
   - Arm bushing remover and installer (MB992121)
   - Arm bushing base (MB992125)
   - Base spacer (MB992175)

<New>

Insert the attached sheet 10(2/2)

TRAILING ARM BUSHING REPLACEMENT

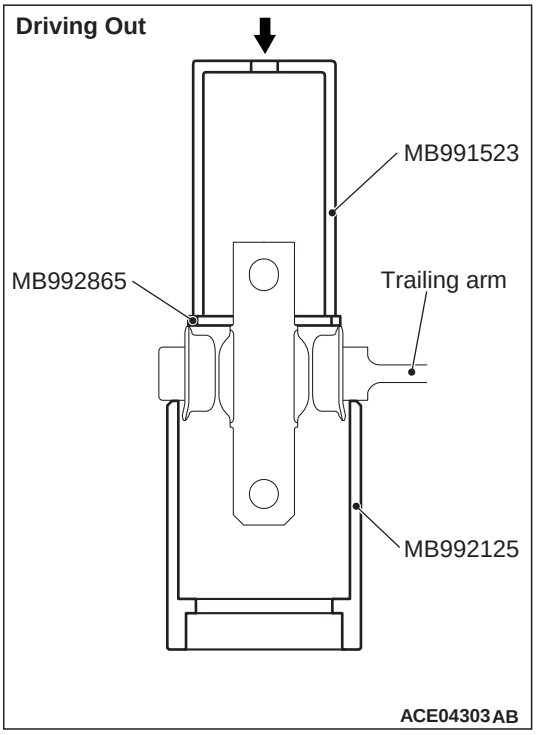

1. Use the following special tools to remove the trailing arm bushing:
   - Remover base (MB991523)
   - Spacer base (MB992865)
   - Arm bushing base (MB992125)

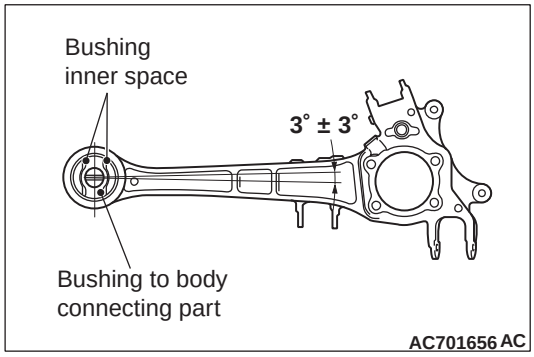

2. Determine the installation direction and the installation position of the trailing arm bushing.
   (1) Install so that the protruding side of the trailing arm bushing inner pipe faces inside the body.
   (2) Position horizontally the trailing arm bushing to body connecting part, and locate bushing inner space as shown in the figure.

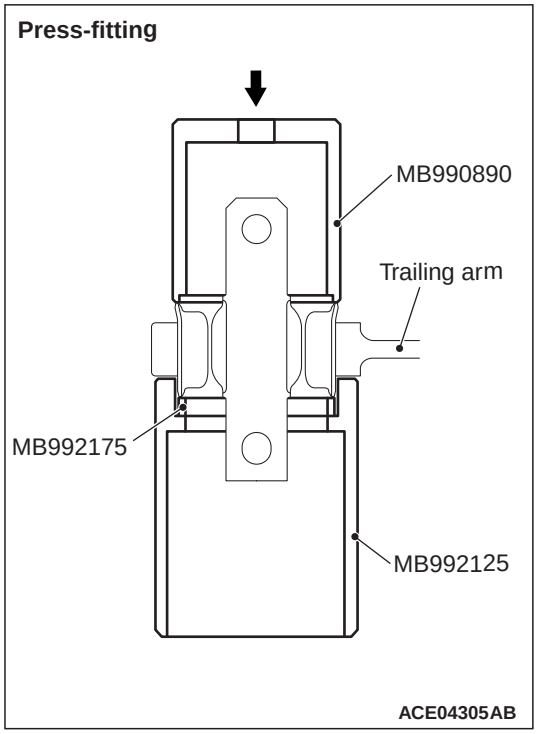

3. Use the following special tools to press-fit the trailing arm bushing up to the position shown in the figure:
   - Rear suspension bushing base (MB990890)
   - Spacer base (MB992175)
   - Arm bushing base (MB992125)

>>B<< WASHER/REAR DRIVESHAFT NUT INSTALLATION

⚠ CAUTION

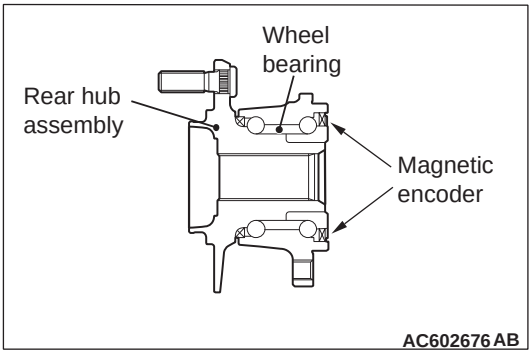

The wheel speed detection magnetic encoder collects metallic particles easily, because it is magnetised. Make sure that the magnetic encoder should not collect metallic particles. Check that there is not any trouble prior to reassembling it.

- **When installing the driveshaft, make sure that it does not contact with the wheel speed detection magnetic encoder (integrated with the inner oil seal) to avoid damage.**
- **Do not apply the vehicle weight on the rear wheel hub assembly before fully tightening the driveshaft nuts. Otherwise, the wheel bearing will be broken.**

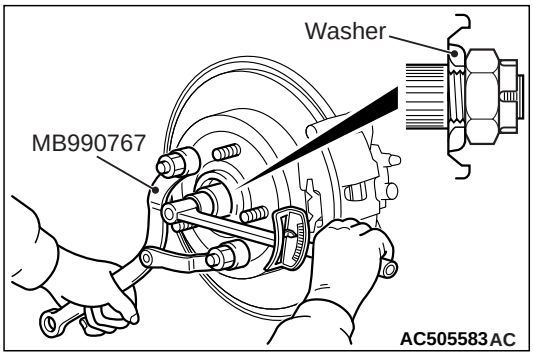

1. Incorporate the driveshaft washer as shown in the figure.
2. Using special tool front hub and flange yoke holder (MB990767), tighten the driveshaft nuts to the specified torque. At this time, tighten the nuts within the specified torque range considering the final tightening.

   Tightening torque: 144 – 176 N·m
3. If the pin holes do not align with the pins, tighten the driveshaft nut (less than 200 N·m) and find the nearest hole then bend the split pin to fit it.

INSPECTION

M1341002300320

- Check the bushings for wear and deterioration.

<Old>

- Check the trailing arm for bending or damage.

TRAILING ARM BUSHING REPLACEMENT <VEHICLES WITH 5 PERSONS SEAT (EXCEPT FOR GCC-HIGH GROUND CLEARANCE SUSPENSION AND AUSTRALIA)>

M1341011300566

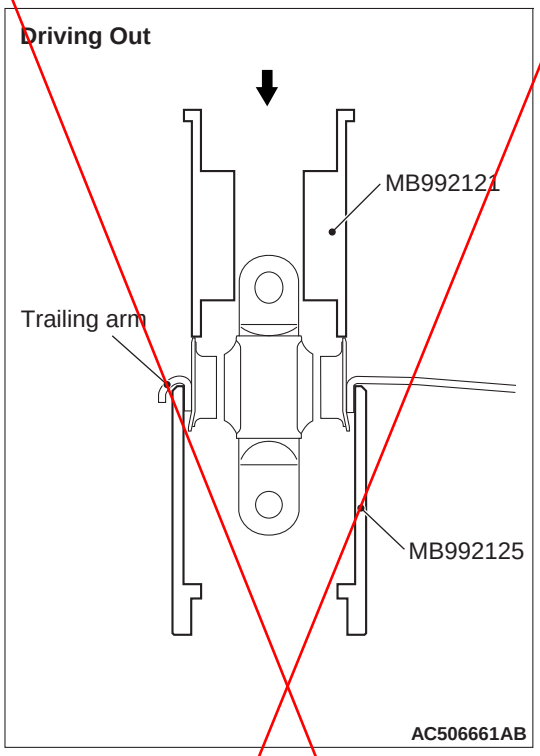

1. Use the following special tools to remove the trailing arm bushing:
   - Arm bushing remover and installer (MB992121)
   - Arm bushing base (MB992125)

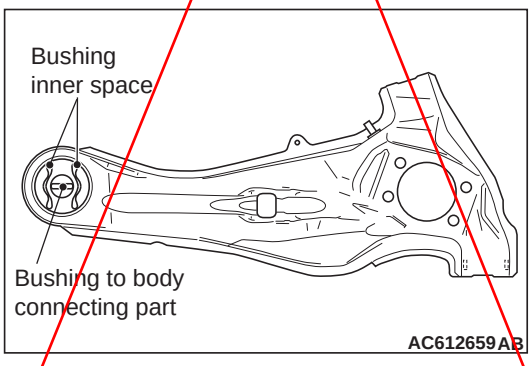

2. Determine the installation direction and the installation position of the trailing arm bushing.
   (1) Install so that the protruding side of the trailing arm bushing inner pipe faces inside the body.
   (2) Position horizontally the trailing arm bushing to body connecting part, and locate bushing inner space as shown in the figure.

<New>
Insert the attached sheet 11(3/3)

<Old>

Attached sheet 11(2/3)

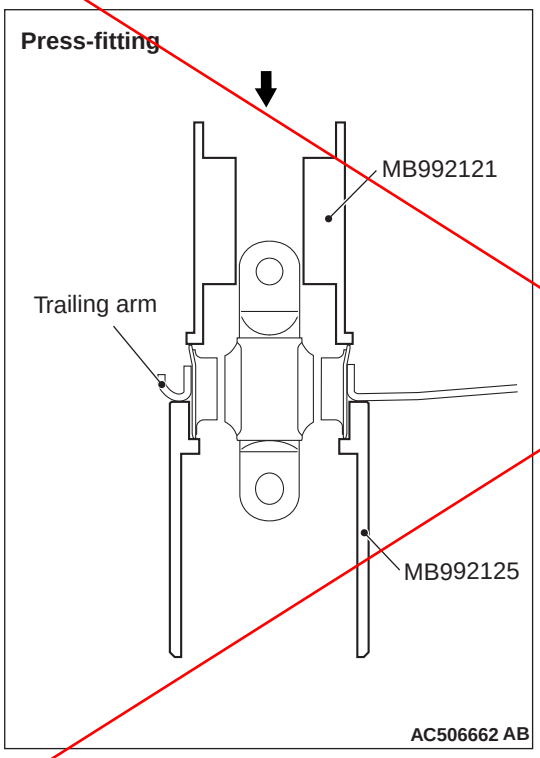

3. Use the following special tools to press-fit the trailing arm bushing up to the position shown in the figure:
   - Arm bushing remover and installer (MB992121)
   - Arm bushing base (MB992125)

<New>

Insert the attached sheet 11(3/3)

TRAILING ARM BUSHING REPLACEMENT<VEHICLES WITH 5 PERSONS SEAT(EXCEPT FOR GCC-HIGH GROUND CLEARANCE SUSPENSION AND AUSTRALIA)>

⚠ CAUTION

The trailing arm bushing can be replaced only once. If the bushing is replaced multiple times, the drawing force of bushing may become reduced.

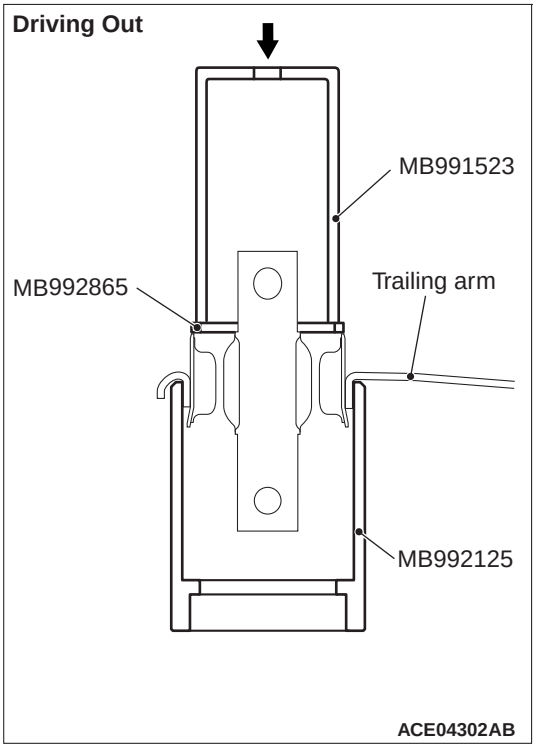

1. Use the following special tools to remove the trailing arm bushing:
   - Remover base (MB991523)
   - Spacer base (MB992865)
   - Arm bushing base (MB992125)

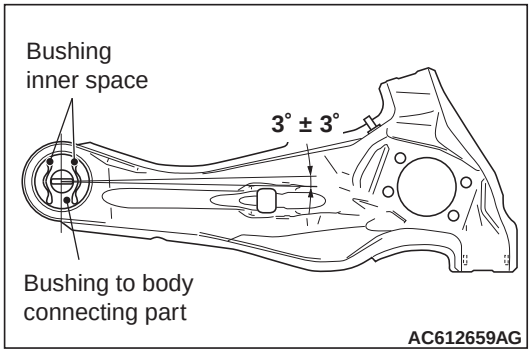

2. Determine the installation direction and the installation position of the trailing arm bushing.
   (1) Install so that the protruding side of the trailing arm bushing inner pipe faces inside the body.
   (2) Position horizontally the trailing arm bushing to body connecting part, and locate bushing inner space as shown in the figure.

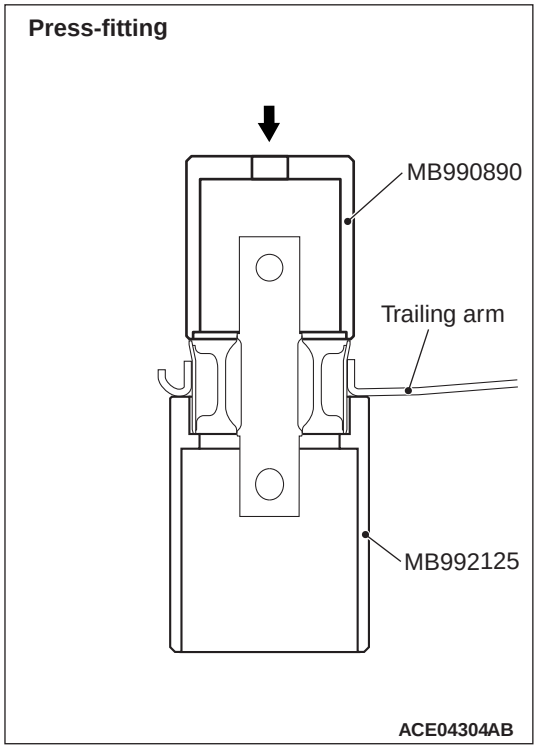

3. Use the following special tools to press-fit the trailing arm bushing up to the position shown in the figure:
   - Rear suspension bushing base (MB990890)
   - Arm bushing base (MB992125)

<Old>

Attached sheet 12(1/2)

TRAILING ARM BUSHING REPLACEMENT <VEHICLES WITH 5 PERSONS SEAT (FOR GCC-HIGH GROUND CLEARANCE SUSPENSION AND AUSTRALIA), VEHICLES WITH 7 PERSONS SEAT>

M1341011300577

⚠ CAUTION

The trailing arm bushing can be replaced only once. If the bushing is replaced multiple times, the drawing force of bushing may become reduced.

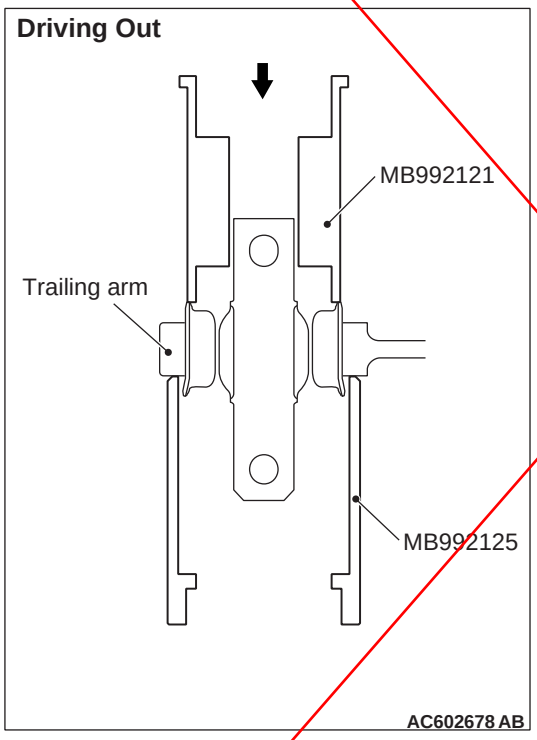

1. Use the following special tools to remove the trailing arm bushing:
   - Arm bushing remover and installer (MB992121)
   - Arm bushing base (MB992125)

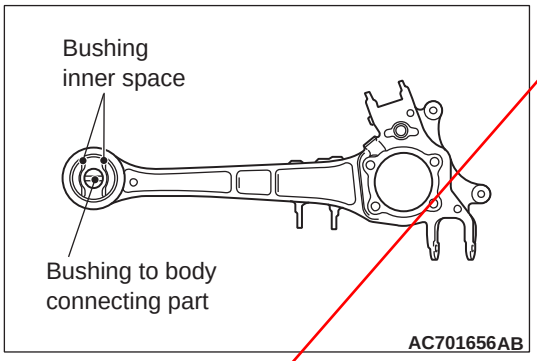

2. Determine the installation direction and the installation position of the trailing arm bushing.
   (1) Install so that the protruding side of the trailing arm bushing inner pipe faces inside the body.
   (2) Position horizontally the trailing arm bushing to body connecting part, and locate bushing inner space as shown in the figure.

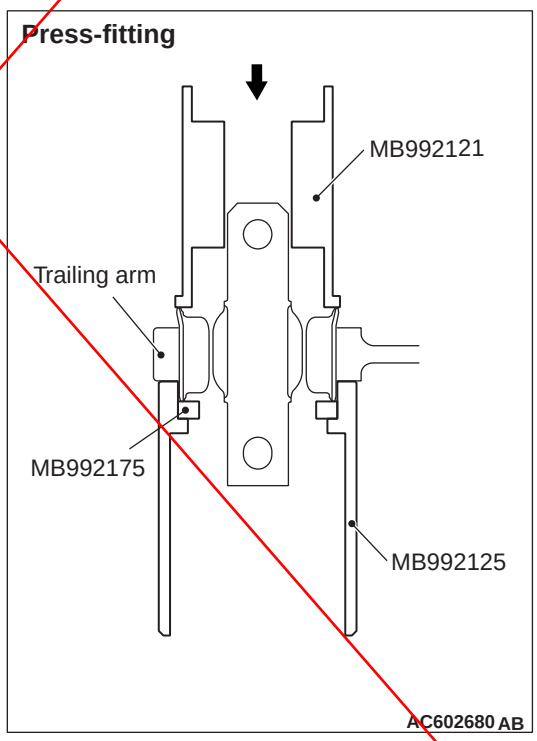

3. Use the following special tools to press-fit the trailing arm bushing up to the position shown in the figure:
   - Arm bushing remover and installer (MB992121)
   - Arm bushing base (MB992125)
   - Base spacer (MB992175)

<New>

Insert the attached sheet 12(2/2)

TRAILING ARM BUSHING REPLACEMENT<VEHICLES WITH 5 PERSONS SEAT(FOR GCC-HIGH GROUND CLEARANCE SUSPENSION AND AUSTRALIA)>, <VEHICLES WITH 7 PERSONS SEAT>

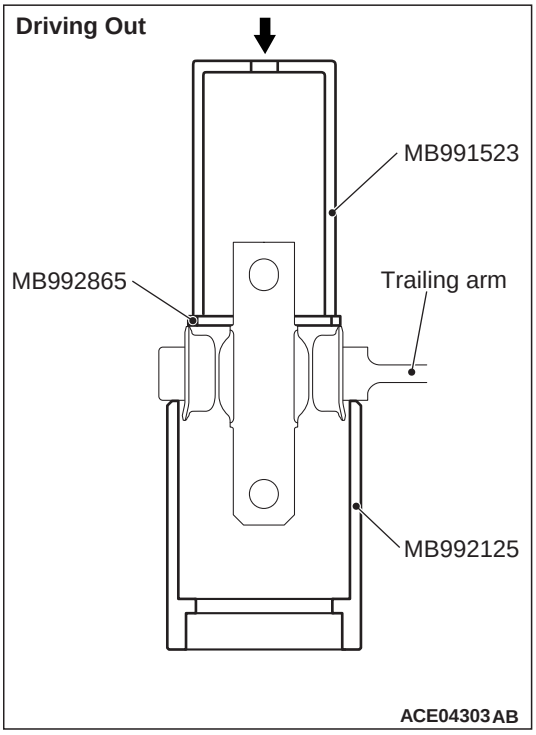

1. Use the following special tools to remove the trailing arm bushing:
   - Remover base (MB991523)
   - Spacer base (MB992865)
   - Arm bushing base (MB992125)

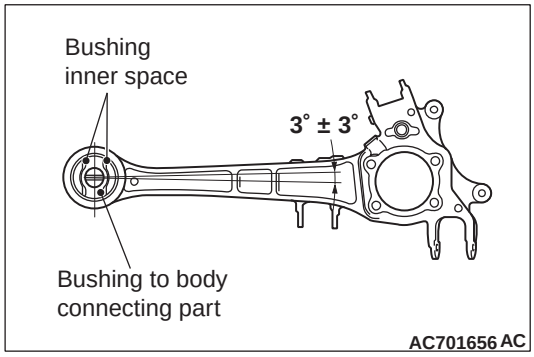

2. Determine the installation direction and the installation position of the trailing arm bushing.
   (1) Install so that the protruding side of the trailing arm bushing inner pipe faces inside the body.
   (2) Position horizontally the trailing arm bushing to body connecting part, and locate bushing inner space as shown in the figure.

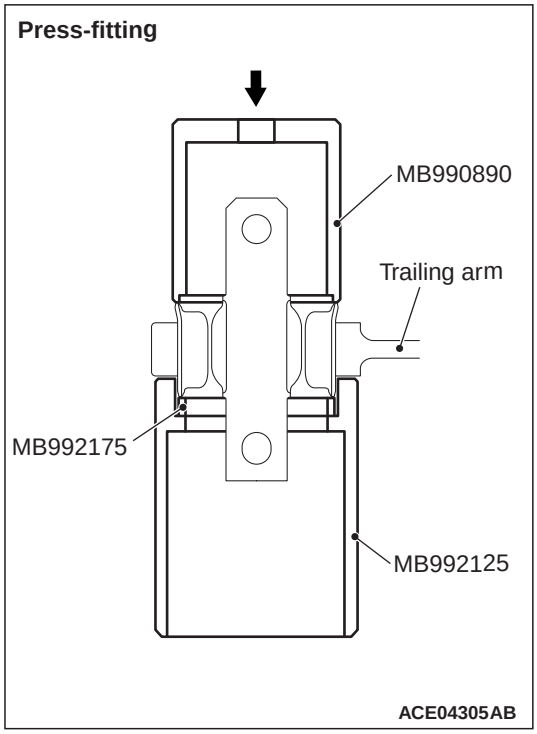

3. Use the following special tools to press-fit the trailing arm bushing up to the position shown in the figure:
   - Rear suspension bushing base (MB990890)
   - Spacer base (MB992175)
   - Arm bushing base (MB992125)

Attached sheet 13(1/2)

<New>
Insert the attached sheet 13(2/2)

<Old>

Tool	Number	Name	Use
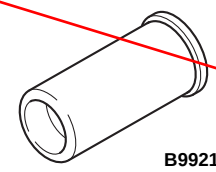 B992121	MB992121	Arm bushing remover and installer	Trailing arm bushing removal and press-fit
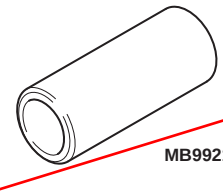 MB992125	MB992125	Arm bushing base	
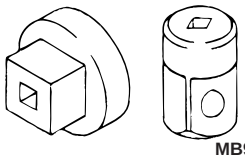 MB990326	MB990326	Preload socket	• Control link pillow ball joint rotation starting torque measurement • Stabilizer link ball joint rotation torque measurement
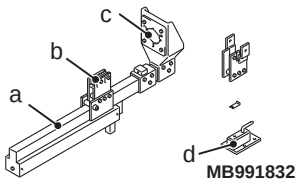 MB991832	MB991832 a: MB991793 b: MB991796 c: MB991794 d: MB991830	Spring compressor set a: Spring compressor assembly b: Attachment B c: Upper plate d: Fixture	Coil spring removal and installation

ON-VEHICLE SERVICE

REAR WHEEL ALIGNMENT CHECK AND ADJUSTMENT

M1341011000855

1. Before the wheel alignment measurement, adjust the rear suspension, wheel, and tyres in good condition.
2. Park the vehicle on a level surface to measure the wheel alignment.

TOE-IN

Standard value: 3 ± 2 mm

If it is out of the standard range, adjust as follows:

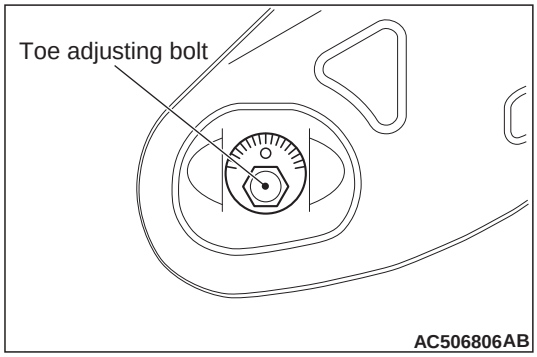

AC506806AB

Turn the toe adjusting bolt (the mounting bolt inside the body on the control link) to adjust.

Left wheels: Clockwise (+) Toe in
Right wheels: Clockwise (–) Toe in

Toe-in varies approximately 2.6 mm (equivalent to 0°16' of the toe angle for one side) for each scale mark.

CAMBER

Standard value: –0°25' ±0°30' (difference between right and left within 0°30')

Tool	Number	Name	Use
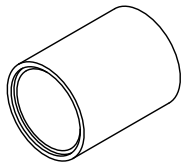	MB991523	Remover base	Trailing arm bushing removal and press-fit
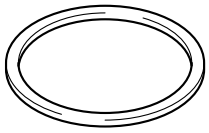 B992865	MB992865	Spacer base	
 MB990890	MB990890	Rear suspension bushing base	
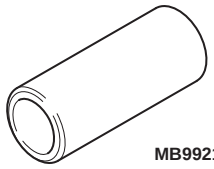 MB992125	MB992125	Arm bushing base	
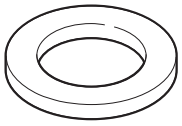 MB992175	MB992175	Base spacer	

Attached sheet 14(1/3)

INSTALLATION SERVICE POINTS

>>A<< WASHER/DRIVESHAFT NUT INSTALLATION

⚠ CAUTION

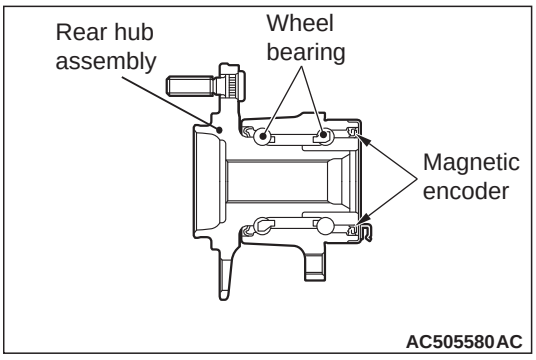

- **The magnetic encoder collects metallic particles easily, because it is magnetized. Make sure that the magnetic encoder should not collect metallic particles. Check that there is not any trouble prior to reassembling it.**
- **When installing the drive shaft, make sure that it does not contact with the magnetic encoder (integrated with the inner oil seal) to avoid damage.**
- **Do not apply the vehicle weight on the rear wheel hub assembly before fully tightening the driveshaft nuts. Otherwise, the wheel bearing will be broken.**

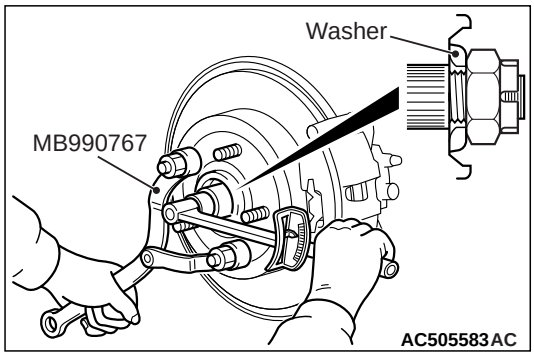

1. Incorporate the driveshaft washer as shown in the figure.
2. Using special tool front hub and flange yoke holder (MB990767), tighten the driveshaft nuts to the specified torque. At this time, tighten the nuts within the specified torque range considering the final tightening.

   Tightening torque: 144 – 176 N·m
3. If the pin holes do not align with the pins, tighten the driveshaft nut (less than 200 N·m) and find the nearest hole then bend the split pin to fit it.

INSPECTION

M1341002300290

- Check the bushings for wear and deterioration.
- Check the trailing arm for bending or damage.

<Old>

TRAILING ARM BUSHING REPLACEMENT

M1341011300384

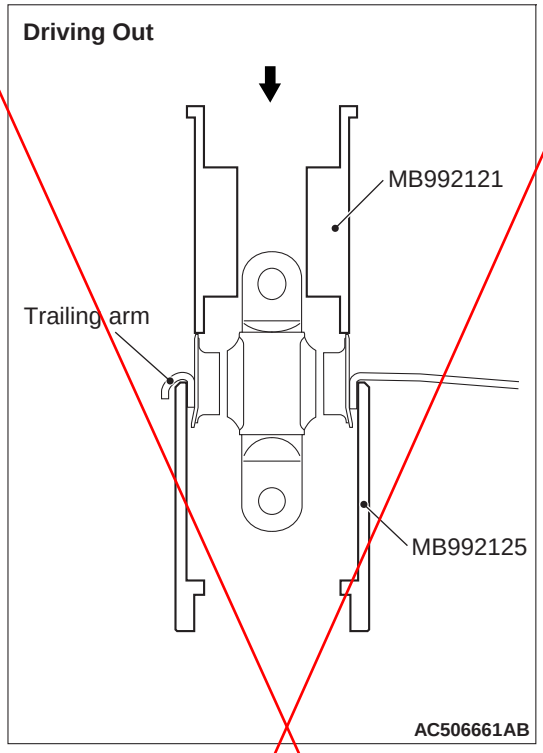

1. Use the following special tools to remove the trailing arm bushing:
   - Arm bushing remover and installer (MB992121)
   - Arm bushing base (MB992125)

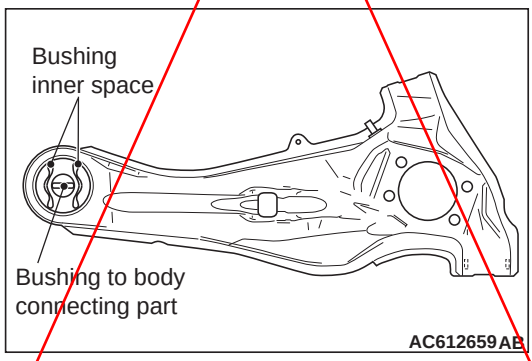

2. Determine the installation direction and the installation position of the trailing arm bushing.
   (1) Install so that the protruding side of the trailing arm bushing inner pipe faces inside the body.
   (2) Position horizontally the trailing arm bushing to body connecting part, and locate bushing inner space as shown in the figure.

<New>

Insert the attached sheet 14(3/3)

Attached sheet 14(2/3)

<Old>

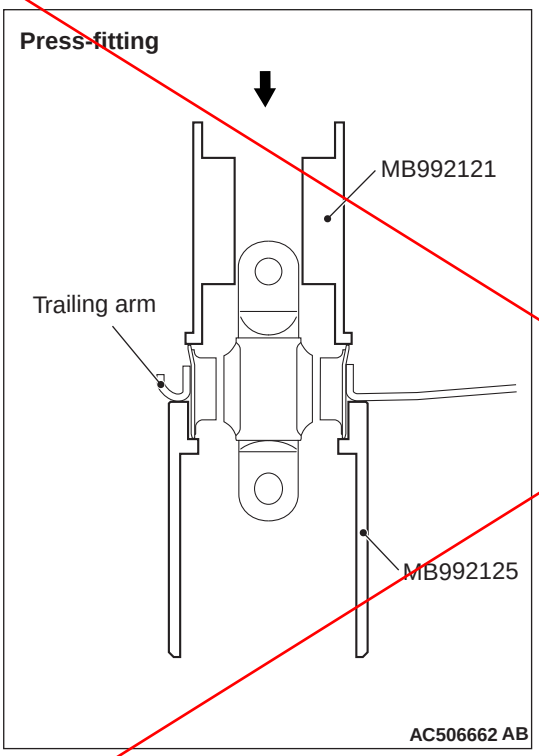

3. Use the following special tools to press-fit the trailing arm bushing up to the position shown in the figure:
   - Arm bushing remover and installer (MB992121)
   - Arm bushing base (MB992125)

<New>

Insert the attached sheet 14(3/3)

TRAILING ARM BUSHING REPLACEMENT

⚠ CAUTION

The trailing arm bushing can be replaced only once. If the bushing is replaced multiple times, the drawing force of bushing may become reduced.

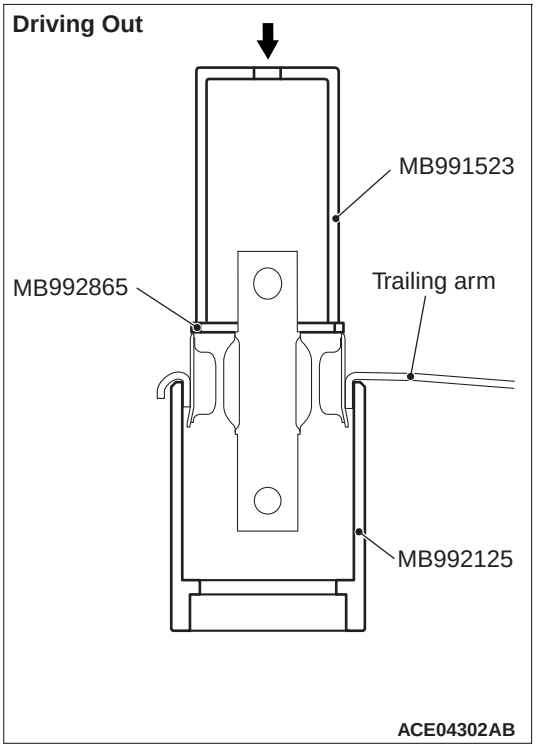

1. Use the following special tools to remove the trailing arm bushing:
   - Remover base (MB991523)
   - Spacer base (MB992865)
   - Arm bushing base (MB992125)

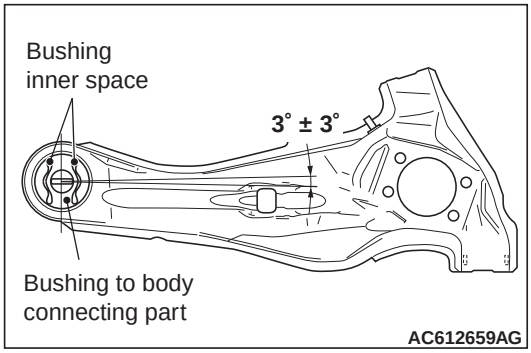

2. Determine the installation direction and the installation position of the trailing arm bushing.
   (1) Install so that the protruding side of the trailing arm bushing inner pipe faces inside the body.
   (2) Position horizontally the trailing arm bushing to body connecting part, and locate bushing inner space as shown in the figure.

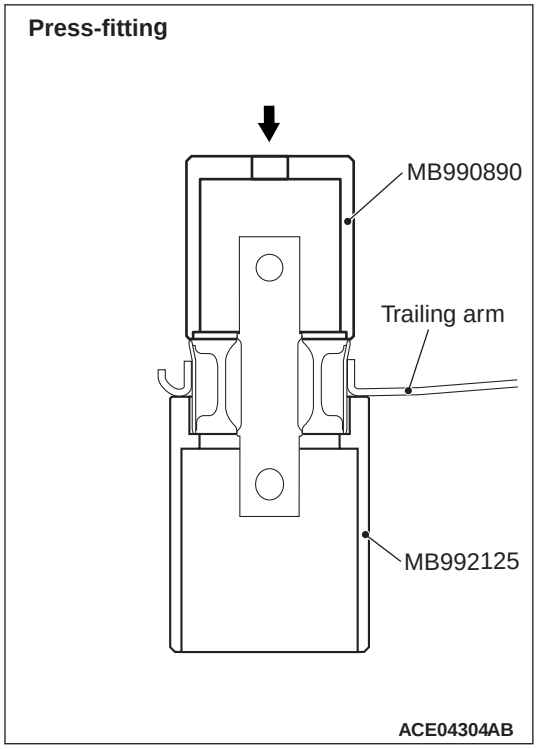

3. Use the following special tools to press-fit the trailing arm bushing up to the position shown in the figure:
   - Rear suspension bushing base (MB990890)
   - Arm bushing base (MB992125)