SERVICE BULLETIN

MITSUBISHI MOTORS

GLOBAL AFTER SALES OFFICE, MITSUBISHI MOTORS CORPORATION

PURPOSE : CHANGE	ISSUE NO. : MSB-15EXML37-001	DATE : 2015-04-01
SUBJECT : Addition of the procedure for the replacement of the tie rod end ball joint dust cover		<DESTINATION/MODEL> (As per attached sheet 1) <M/Y> 11-16
GROUP : Gr:37(Steering)		OUTLANDER/OUTLANDER PHEV/ASX/RVR/OUTLANDER SPORT

1. Description :

Please refer to the attached document for the information about the change of mention in the applicable service manual.

2. Affected service manuals :

Please refer to the attached document (Attached sheet 1)

3. About the details :

Please refer to the attached document (Attached sheet 5-6)

For overseas market
EU, RUSSIA

Attached sheet 1

Applicable manual	Pub. No.	Applicable title(Info-ID)	Content
2013 OUTLANDER Workshop Manual	CGFE13E1-CD(English) CGFF13E1-CD(French) CGFG13E1-CD(German) CGFS13E1-CD(Spanish) CGFI13E1-CD(Italian) RUSSIA:N/A	Added below “POWER STEERNG GEAR BOX AND LINKAGE DISASSEMBLY AND REASSEMBLY” (M372-01-111-60200-01)	Attached sheet 5
2014 OUTLANDER/ OUTLANDER PHEV Workshop Manual	CGFE14E2-CD(English) CGFF14E2-CD(French) CGFG14E2-CD(German) CGFS14E2-CD(Spanish) CGFI14E2-CD(Italian) RUSSIA:N/A	Added below “POWER STEERNG GEAR BOX AND LINKAGE DISASSEMBLY AND REASSEMBLY” (M372-01-111-60200-01)	
2014.5 OUTLANDER/ OUTLANDER PHEV Workshop Manual	CGFE14E3-CD(English) CGFF14E3-CD(French) CGFG14E3-CD(German) CGFS14E3-CD(Spanish) CGFI14E3-CD(Italian) RUSSIA:N/A	Added below “POWER STEERNG GEAR BOX AND LINKAGE DISASSEMBLY AND REASSEMBLY” (M372-01-111-60200-01)	
2016 OUTLANDER/ OUTLANDER PHEV Workshop Manual	CGFE16E1-CD(English) CGFF16E1-CD(French) CGFG16E1-CD(German) CGFS16E1-CD(Spanish) CGFI16E1-CD(Italian) RUSSIA:N/A	Added below “POWER STEERNG GEAR BOX AND LINKAGE DISASSEMBLY AND REASSEMBLY” (M372-01-111-60200-01)	
2011 ASX Workshop Manual	CGWE11E2-CD(English) CGWF11E2-CD(French) CGWG11E2-CD(German) CGWS11E2-CD(Spanish) CGWI11E2-CD(Italian)	Added below “POWER STEERNG GEAR BOX AND LINKAGE DISASSEMBLY AND REASSEMBLY” (M372-01-111-52700-01)	
2012 ASX Workshop Manual	CGWE12E1-CD(English) CGWF12E1-CD(French) CGWG12E1-CD(German) CGWS12E1-CD(Spanish) CGWI12E1-CD(Italian) RUSSIA:N/A	Added below “POWER STEERNG GEAR BOX AND LINKAGE DISASSEMBLY AND REASSEMBLY” (M372-01-111-52700-01)	
2013 ASX Workshop Manual	CGWE13E2-CD(English) CGWF13E2-CD(French) CGWG13E2-CD(German) CGWS13E2-CD(Spanish) CGWI13E2-CD(Italian) RUSSIA:N/A	Added below “POWER STEERNG GEAR BOX AND LINKAGE DISASSEMBLY AND REASSEMBLY” (M372-01-111-52700-01)	

EU, RUSSIA

Applicable manual	Pub. No.	Applicable title(Info-ID)	Content
2014 ASX Workshop Manual	CGWE14E1-CD(English) CGWF14E1-CD(French) CGWG14E1-CD(German) CGWS14E1-CD(Spanish) CGWI14E1-CD(Italian) RUSSIA:N/A	Added below “POWER STEERNG GEAR BOX AND LINKAGE DISASSEMBLY AND REASSEMBLY” (M372-01-111-52700-01)	Attached sheet 5
2015 ASX Workshop Manual	CGWE15E1-CD(English) CGWF15E1-CD(French) CGWG15E1-CD(German) CGWS15E1-CD(Spanish) CGWI15E1-CD(Italian) RUSSIA:N/A	Added below “POWER STEERNG GEAR BOX AND LINKAGE DISASSEMBLY AND REASSEMBLY” (M372-01-111-52700-01)	

EXP, GCC

Applicable manual	Pub. No.	Applicable title(Info-ID)	Content
2014 OUTLANDER Workshop Manual	PWRE1303R(English) PWRS1304R(Spanish)	Added below “POWER STEERNG GEAR BOX AND LINKAGE DISASSEMBLY AND REASSEMBLY” (M372-01-111-60200-01)	Attached sheet 5
2011 ASX Workshop Manual	PWPE1006R(English) PWPS1007R(Spanish)	Added below “POWER STEERNG GEAR BOX AND LINKAGE DISASSEMBLY AND REASSEMBLY” (M372-01-111-53800-01)	

MMAL, NZ

Applicable manual	Pub. No.	Applicable title(Info-ID)	Content
2013 OUTLANDER Workshop Manual	AU900304 (AUSTRALIA), DRAFT(NEW ZEALAND)	Added below “POWER STEERNG GEAR BOX AND LINKAGE DISASSEMBLY AND REASSEMBLY” (M372-01-111-60200-01)	Attached sheet 5
2014 OUTLANDER/ OUTLANDER PHEV Workshop Manual	AU900408 (AUSTRALIA), DRAFT(NEW ZEALAND)	Added below “POWER STEERNG GEAR BOX AND LINKAGE DISASSEMBLY AND REASSEMBLY” (M372-01-111-60200-01)	

MMNA

Applicable manual	Pub. No.	Applicable title(Info-ID)	Contents
2014 OUTLANDER Service Manual	MSCD-007B-2014	Added below “POWER STEERNG GEAR BOX AND LINKAGE DISASSEMBLY AND REASSEMBLY” (M372-01-111-60200-01)	Attached sheet 6
2015 OUTLANDER Service Manual	MSCD-007B-2015	Added below “POWER STEERNG GEAR BOX AND LINKAGE DISASSEMBLY AND REASSEMBLY” (M372-01-111-60200-01)	
2011 OIUTLANDER SPORT, RVR, ASX Service Manual	MSCD-017B-2011	Added below “POWER STEERNG GEAR BOX AND LINKAGE DISASSEMBLY AND REASSEMBLY” (M372-01-111-53800-01)	
2012 OIUTLANDER SPORT, RVR, ASX Service Manual	MSCD-017B-2012	Added below “POWER STEERNG GEAR BOX AND LINKAGE DISASSEMBLY AND REASSEMBLY” (M372-01-111-53800-01)	
2013 OIUTLANDER SPORT, RVR, ASX Service Manual	MSCD-017B-2013	Added below “POWER STEERNG GEAR BOX AND LINKAGE DISASSEMBLY AND REASSEMBLY” (M372-01-111-53800-01)	
2014 OIUTLANDER SPORT, RVR, ASX Service Manual	MSCD-017B-2014	Added below “POWER STEERNG GEAR BOX AND LINKAGE DISASSEMBLY AND REASSEMBLY” (M372-01-111-53800-01)	
2015 OIUTLANDER SPORT, RVR, ASX Service Manual	MSCD-017B-2015	Added below “POWER STEERNG GEAR BOX AND LINKAGE DISASSEMBLY AND REASSEMBLY” (M372-01-111-53800-01)	

<Added>

Attached sheet 5

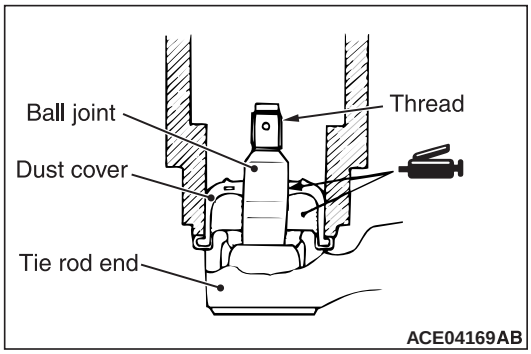

TIE ROD END BALL JOINT DUST COVER REPLACEMENT

If the dust cover is damaged accidentally during service work, replace the dust cover as follows:

1. Fill and apply the specified grease into the inside and lip of the dust cover.

   NOTE: Wipe off the grease on the ball joint so that the amount of grease inside the dust cover does not exceed the total amount.

   Specified grease: Multipurpose grease SAE J310, NLGI No.2 or equivalent
   Usage (Total amount):
   Inside of dust cover: 5.0 ± 1.0 g
   Lip: As required.

2. Apply the specified sealant to the dust cover mounting surface at the tie rod end.

   Semi-drying sealant: ThreeBond TB1215 or equivalent
   Application amount: As required.

3. Drive in the dust cover with special tool front axle base (MB990776) until it is fully seated.

   NOTE:
   - *There should be no grease on the thread of the ball joint.*
   - *There should be no clearance between the dust cover and the tie rod end.*

4. Check the dust cover for cracks or damage by pushing it with your finger.

<Added>

Attached sheet 6

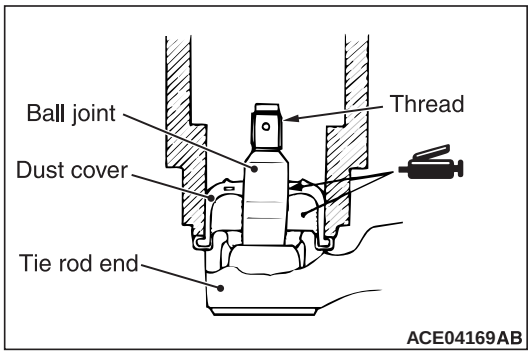

TIE ROD END BALL JOINT DUST COVER REPLACEMENT

Required Special Tools:

- MB990776: Front axle base

If the dust cover is damaged accidentally during service work, replace the dust cover as follows:

1. Fill and apply the specified grease into the inside and lip of the dust cover.

   NOTE: Wipe off the grease on the ball joint so that the amount of grease inside the dust cover does not exceed the total amount.

   Specified grease: Multipurpose grease SAE J310, NLGI No.2 or equivalent
   Usage (Total amount):
   Inside of dust cover: 5.0 ± 1.0 g (0.18 ± 0.04 oz)
   Lip: As required.

2. Apply the specified sealant to the dust cover mounting surface at the tie rod end.

   Semi-drying sealant: ThreeBond TB1215 or equivalent
   Application amount: As required.

3. Drive in the dust cover with special tool front axle base (MB990776) until it is fully seated.

   NOTE:
   - *There should be no grease on the thread of the ball joint.*
   - *There should be no clearance between the dust cover and the tie rod end.*

4. Check the dust cover for cracks or damage by pushing it with your finger.