SERVICE BULLETIN

MITSUBISHI MOTORS

GLOBAL AFTER SALES OFFICE, MITSUBISHI MOTORS CORPORATION

PURPOSE : Addition	ISSUE NO. : MSB-15EXML37-002	DATE : 2015-11-09
SUBJECT : Addition of the service point regarding the tie rod end ball joint dust cover replacement by the addition of its service parts		<DESTINATION/MODEL> (As shown below) <M/Y> 07-15
GROUP : Gr:37(Steering)		As per attached sheet 1

1. Description :

Please refer to the attached document for the information about the addition of mention in the applicable service manual.

2. Affected service manuals :

Please refer to the attached document (Attached sheet 1)

3. About the details :

Please refer to the attached document (Attached sheets 5-10)

4. Timing of implementation :

From the beginning of September, 2015 when the service parts is set.

Attached sheet 1

For overseas market
【MMNA/MEXICO】

Applicable manual	Pub. No.	Applicable title (INFO-ID)	Contents
2007 OUTLANDER Service Manual	MSCD-007B-2007	LUBRICANT(S) (M372-00-040-83300-01)	Attached sheet 5
		SPECIAL TOOL(S) (M372-00-061-43202-01)	Attached sheet 6
		Added below "DISASSEMBLY AND REASSEMBLY" (M372-01-111-08801-01)	Attached sheet 7
2008 OUTLANDER Service Manual	MSCD-007B-2008	LUBRICANT(S) (M372-00-040-83300-01)	Attached sheet 5
		SPECIAL TOOL(S) (M372-00-061-43202-01)	Attached sheet 6
		Added below "DISASSEMBLY AND REASSEMBLY" (M372-01-111-08801-01)	Attached sheet 7
2009 OUTLANDER Service Manual	MSCD-007B-2009	LUBRICANT(S) (M372-00-040-87700-01)	Attached sheet 5
		SPECIAL TOOL(S) (M372-00-061-43202-01)	Attached sheet 6
		Added below "DISASSEMBLY AND REASSEMBLY" (M372-01-111-08801-01)	Attached sheet 7
2010 OUTLANDER Service Manual	MSCD-007B-2010	LUBRICANT(S) (M372-00-040-87700-01)	Attached sheet 5
		SPECIAL TOOL(S) (M372-00-061-43202-01)	Attached sheet 6
		Added below "DISASSEMBLY AND REASSEMBLY" (M372-01-111-08801-01)	Attached sheet 7
2011 OUTLANDER Service Manual	MSCD-007B-2011 Mexico: DRAFT	LUBRICANT(S) (M372-00-040-87700-01)	Attached sheet 5
		SPECIAL TOOL(S) (M372-00-061-43202-01)	Attached sheet 6
		Added below "DISASSEMBLY AND REASSEMBLY" (M372-01-111-08801-01)	Attached sheet 7
2012 OUTLANDER Service Manual	MSCD-007B-2012 Mexico: DRAFT	LUBRICANT(S) (M372-00-040-87700-01)	Attached sheet 5
		SPECIAL TOOL(S) (M372-00-061-43202-01)	Attached sheet 6
		Added below "DISASSEMBLY AND REASSEMBLY" (M372-01-111-08801-01)	Attached sheet 7
2008 LANCER Service Manual	MSCD-106B-2008	LUBRICANT(S) (M372-00-040-85500-01)	Attached sheet 5
		SPECIAL TOOL(S) (M372-00-061-40902-01)	Attached sheet 6
		Added below "DISASSEMBLY AND REASSEMBLY" (M372-01-111-09902-01)	Attached sheet 7
2009 LANCER Service Manual	MSCD-106B-2009	LUBRICANT(S) (M372-00-040-85501-01)	Attached sheet 5
		SPECIAL TOOL(S) (M372-00-061-40902-01)	Attached sheet 6
		Added below "DISASSEMBLY AND REASSEMBLY" (M372-01-111-09903-01)	Attached sheet 7
2009 LANCER SPORTBACK Service Manual	MSCD-014B-2009	LUBRICANT(S) (M372-00-040-85501-01)	Attached sheet 5
		SPECIAL TOOL(S) (M372-00-061-40902-01)	Attached sheet 6
		Added below "DISASSEMBLY AND REASSEMBLY" (M372-01-111-09903-01)	Attached sheet 7
2010 LANCER Service Manual	MSCD-106B-2010	LUBRICANT(S) (M372-00-040-85501-01)	Attached sheet 5
		SPECIAL TOOL(S) (M372-00-061-40902-01)	Attached sheet 6
		Added below "DISASSEMBLY AND REASSEMBLY" (M372-01-111-09903-01)	Attached sheet 7
2010 LANCER SPORTBACK Service Manual	MSCD-014B-2010	LUBRICANT(S) (M372-00-040-85501-01)	Attached sheet 5
		SPECIAL TOOL(S) (M372-00-061-40902-01)	Attached sheet 6
		Added below "DISASSEMBLY AND REASSEMBLY" (M372-01-111-09903-01)	Attached sheet 7
2011 LANCER/LANCER SPORTBACK Service Manual	MSCD-106B-2011 Mexico: DRAFT	LUBRICANT(S) (M372-00-040-85501-01)	Attached sheet 5
		SPECIAL TOOL(S) (M372-00-061-40902-01)	Attached sheet 6
		Added below "DISASSEMBLY AND REASSEMBLY" (M372-01-111-09903-01)	Attached sheet 7
		LUBRICANT(S) (M372-00-041-00700-01)	Attached sheet 5
		SPECIAL TOOL(S) (M372-00-061-36802-01)	Attached sheet 6
		Added below "DISASSEMBLY AND REASSEMBLY" (M372-01-111-04404-01)	Attached sheet 7
2012 LANCER/LANCER SPORTBACK Service Manual	MSCD-106B-2012 Mexico: DRAFT	LUBRICANT(S) (M372-00-040-85501-01)	Attached sheet 5
		SPECIAL TOOL(S) (M372-00-061-40902-01)	Attached sheet 6
		Added below "DISASSEMBLY AND REASSEMBLY" (M372-01-111-09903-01)	Attached sheet 7
		LUBRICANT(S) (M372-00-041-00700-01)	Attached sheet 5
		SPECIAL TOOL(S) (M372-00-061-36802-01)	Attached sheet 6
		Added below "DISASSEMBLY AND REASSEMBLY" (M372-01-111-04404-01)	Attached sheet 7

Attached sheet 1

Applicable manual	Pub. No.	Applicable title (INFO-ID)	Contents
2013 LANCER/LANCER SPORTBACK Service Manual	MSCD-106B-2013 Mexico: DRAFT	LUBRICANT(S) (M372-00-041-13700-01)	Attached sheet 5
		SPECIAL TOOL(S) (M372-00-061-89600-01)	Attached sheet 6
		Added below "DISASSEMBLY AND REASSEMBLY" (M372-01-111-63500-01)	Attached sheet 7
		LUBRICANT(S) (M372-00-041-00700-01)	Attached sheet 5
		SPECIAL TOOL(S) (M372-00-061-90400-01)	Attached sheet 6
		Added below "DISASSEMBLY AND REASSEMBLY" (M372-01-111-65702-01)	Attached sheet 7
2014 LANCER/LANCER SPORTBACK Service Manual	MSCD-106B-2014 Mexico: DRAFT	LUBRICANT(S) (M372-00-041-13700-01)	Attached sheet 5
		SPECIAL TOOL(S) (M372-00-061-89600-01)	Attached sheet 6
		Added below "DISASSEMBLY AND REASSEMBLY" (M372-01-111-63500-01)	Attached sheet 7
		LUBRICANT(S) (M372-00-041-00700-01)	Attached sheet 5
		SPECIAL TOOL(S) (M372-00-061-90400-01)	Attached sheet 6
		Added below "DISASSEMBLY AND REASSEMBLY" (M372-01-111-65702-01)	Attached sheet 7
2008 LANCER EVOLUTION Service Manual	MSCD-206B-2008	LUBRICANT(S) (M372-00-040-85500-01)	Attached sheet 5
		SPECIAL TOOL(S) (M372-00-061-53901-01)	Attached sheet 6
		Added below "DISASSEMBLY AND REASSEMBLY" (M372-01-111-20401-01)	Attached sheet 7
2009 LANCER EVOLUTION Service Manual	MSCD-206B-2009	LUBRICANT(S) (M372-00-040-85500-01)	Attached sheet 5
		SPECIAL TOOL(S) (M372-00-061-53901-01)	Attached sheet 6
		Added below "DISASSEMBLY AND REASSEMBLY" (M372-01-111-20401-01)	Attached sheet 7
2010 LANCER EVOLUTION Service Manual	MSCD-206B-2010	LUBRICANT(S) (M372-00-040-85500-01)	Attached sheet 5
		SPECIAL TOOL(S) (M372-00-061-53901-01)	Attached sheet 6
		Added below "DISASSEMBLY AND REASSEMBLY" (M372-01-111-20401-01)	Attached sheet 7
2011 LANCER EVOLUTION Service Manual	MSCD-206B-2011	LUBRICANT(S) (M372-00-040-85500-01)	Attached sheet 5
		SPECIAL TOOL(S) (M372-00-061-53901-01)	Attached sheet 6
		Added below "DISASSEMBLY AND REASSEMBLY" (M372-01-111-20401-01)	Attached sheet 7
2012 LANCER EVOLUTION Service Manual	MSCD-206B-2012	LUBRICANT(S) (M372-00-040-85500-01)	Attached sheet 5
		SPECIAL TOOL(S) (M372-00-061-53901-01)	Attached sheet 6
		Added below "DISASSEMBLY AND REASSEMBLY" (M372-01-111-20401-01)	Attached sheet 7
2013 LANCER EVOLUTION Service Manual	MSCD-206B-2013	LUBRICANT(S) (M372-00-041-15900-01)	Attached sheet 5
		SPECIAL TOOL(S) (M372-00-061-53901-01)	Attached sheet 6
		Added below "DISASSEMBLY AND REASSEMBLY" (M372-01-111-20401-01)	Attached sheet 7
2014 LANCER EVOLUTION Service Manual	MSCD-206B-2014	LUBRICANT(S) (M372-00-041-15900-01)	Attached sheet 5
		SPECIAL TOOL(S) (M372-00-061-53901-01)	Attached sheet 6
		Added below "DISASSEMBLY AND REASSEMBLY" (M372-01-111-20401-01)	Attached sheet 7
2015 LANCER EVOLUTION Service Manual	MSCD-206B-2015	LUBRICANT(S) (M372-00-041-15900-01)	Attached sheet 5
		SPECIAL TOOL(S) (M372-00-061-53901-01)	Attached sheet 6
		Added below "DISASSEMBLY AND REASSEMBLY" (M372-01-111-20401-01)	Attached sheet 7

Attached sheet 1

【EU/RUSSIA】

Applicable manual	Pub. No.	Applicable title (INFO-ID)	Contents
2007 OUTLANDER Workshop Manual	CGXE07E1-CD(ENG) CGXF07E1-CD(FRE) CGXG07E1-CD(GER) CGXS07E1-CD(SPA) Russia: N/A	LUBRICANT(S) (M372-00-041-15900-01)	Attached sheet 8
		SPECIAL TOOL(S) (M372-00-060-91200-01)	Attached sheet 9
		Added below "DISASSEMBLY AND REASSEMBLY" (M372-01-110-54600-01)	Attached sheet 10
2008 OUTLANDER Workshop Manual	CGXE08E2-CD(ENG) CGXF08E2-CD(FRE) CGXG08E2-CD(GER) CGXS08E2-CD(SPA) Russia: N/A	LUBRICANT(S) (M372-00-040-77000-01)	Attached sheet 8
		SPECIAL TOOL(S) (M372-00-061-16400-01)	Attached sheet 9
		Added below "DISASSEMBLY AND REASSEMBLY" (M372-01-110-79500-01)	Attached sheet 10
2009 OUTLANDER Workshop Manual	CGXE09E2-CD(ENG) CGXF09E2-CD(FRE) CGXG09E2-CD(GER) CGXS09E2-CD(SPA) Russia: N/A	LUBRICANT(S) (M372-00-040-77002-01)	Attached sheet 8
		SPECIAL TOOL(S) (M372-00-061-16402-01)	Attached sheet 9
		Added below "DISASSEMBLY AND REASSEMBLY" (M372-01-111-05501-01)	Attached sheet 10
2010 OUTLANDER Workshop Manual	CGXE10E1-CD(ENG) CGXF10E1-CD(FRE) CGXG10E1-CD(GER) CGXS10E1-CD(SPA) Russia: N/A	LUBRICANT(S) (M372-00-040-77002-01)	Attached sheet 8
		SPECIAL TOOL(S) (M372-00-061-16402-01)	Attached sheet 9
		Added below "DISASSEMBLY AND REASSEMBLY" (M372-01-111-05502-01)	Attached sheet 10
2011 OUTLANDER Workshop Manual	CGXE11E1-CD(ENG) CGXF11E1-CD(FRE) CGXG11E1-CD(GER) CGXS11E1-CD(SPA) Russia: N/A	LUBRICANT(S) (M372-00-040-77002-01)	Attached sheet 8
		SPECIAL TOOL(S) (M372-00-061-16402-01)	Attached sheet 9
		Added below "DISASSEMBLY AND REASSEMBLY" (M372-01-111-05503-01)	Attached sheet 10
2012 OUTLANDER Workshop Manual	CGXE12E1-CD(ENG) CGXF12E1-CD(FRE) CGXG12E1-CD(GER) CGXS12E1-CD(SPA) Russia: N/A	LUBRICANT(S) (M372-00-040-77002-01)	Attached sheet 8
		SPECIAL TOOL(S) (M372-00-061-16402-01)	Attached sheet 9
		Added below "DISASSEMBLY AND REASSEMBLY" (M372-01-111-05503-01)	Attached sheet 10
2008 4007 (PEUGEOT)/C-Crosser (CITROEN) Workshop Manual	N/A	LUBRICANT(S) (M372-00-040-69501-01)	Attached sheet 8
		SPECIAL TOOL(S) (M372-00-061-16402-01)	Attached sheet 9
		Added below "DISASSEMBLY AND REASSEMBLY" (M372-01-110-94400-01)	Attached sheet 10
2009 4007 (PEUGEOT)/C-Crosser (CITROEN) Workshop Manual	N/A	LUBRICANT(S) (M372-00-040-88800-01)	Attached sheet 8
		SPECIAL TOOL(S) (M372-00-061-27200-01)	Attached sheet 9
		Added below "DISASSEMBLY AND REASSEMBLY" (M372-01-111-13000-01)	Attached sheet 10
2010 4007 (PEUGEOT)/C-Crosser (CITROEN) Workshop Manual	N/A	LUBRICANT(S) (M372-00-040-88800-01)	Attached sheet 8
		SPECIAL TOOL(S) (M372-00-061-27200-01)	Attached sheet 9
		Added below "DISASSEMBLY AND REASSEMBLY" (M372-01-111-13000-01)	Attached sheet 10
2008 LANCER Workshop Manual	CG1E08E2-CD(ENG) CG1F08E2-CD(FRE) CG1G08E2-CD(GER) CG1S08E2-CD(SPA) Russia: N/A	LUBRICANT(S) (M372-00-040-68400-01)	Attached sheet 8
		SPECIAL TOOL(S) (M372-00-061-10800-01)	Attached sheet 9
		Added below "DISASSEMBLY AND REASSEMBLY" (M372-01-110-96600-01)	Attached sheet 10
		Added below "SERVICE SPECIFICATION(S)" (M372-00-031-42000-01)	Attached sheet 8
		SPECIAL TOOL(S) (M372-00-061-03400-01)	Attached sheet 9
		Added below "INSPECTION" (M372-01-101-08100-01)	Attached sheet 10
2009 LANCER Workshop Manual	CG1E09E1-CD(ENG) CG1F09E1-CD(FRE) CG1G09E1-CD(GER) CG1S09E1-CD(SPA) CG1I09E1-CD(ITA) Russia: N/A	LUBRICANT(S) (M372-00-040-84400-01)	Attached sheet 8
		SPECIAL TOOL(S) (M372-00-061-10800-01)	Attached sheet 9
		Added below "DISASSEMBLY AND REASSEMBLY" (M372-01-110-96601-01)	Attached sheet 10
		LUBRICANT(S) (M372-00-040-84400-01)	Attached sheet 8
		SPECIAL TOOL(S) (M372-00-061-38000-01)	Attached sheet 9
		Added below "DISASSEMBLY AND REASSEMBLY" (M372-01-111-04400-01)	Attached sheet 10

Attached sheet 1

Applicable manual	Pub. No.	Applicable title (INFO-ID)	Contents
2010 LANCER Workshop Manual	CG1E10E1-CD(ENG) CG1F10E1-CD(FRE) CG1G10E1-CD(GER) CG1S10E1-CD(SPA) CG1I10E1-CD(ITA) Russia: N/A	LUBRICANT(S) (M372-00-040-84400-01)	Attached sheet 8
		SPECIAL TOOL(S) (M372-00-061-10800-01)	Attached sheet 9
		Added below "DISASSEMBLY AND REASSEMBLY" (M372-01-110-96602-01)	Attached sheet 10
		LUBRICANT(S) (M372-00-041-00700-01)	Attached sheet 8
		SPECIAL TOOL(S) (M372-00-061-36801-01)	Attached sheet 9
		Added below "DISASSEMBLY AND REASSEMBLY" (M372-01-111-04401-01)	Attached sheet 10
2009 LANCER SPORTBACK Workshop Manual	CG4E09E1-CD(ENG) CG4F09E1-CD(FRE) CG4G09E1-CD(GER) CG4S09E1-CD(SPA) CG4I09E1-CD(ITA) Russia: N/A	LUBRICANT(S) (M372-00-040-84400-01)	Attached sheet 8
		SPECIAL TOOL(S) (M372-00-061-10800-01)	Attached sheet 9
		Added below "DISASSEMBLY AND REASSEMBLY" (M372-01-110-96601-01)	Attached sheet 10
		LUBRICANT(S) (M372-00-040-84400-01)	Attached sheet 8
		SPECIAL TOOL(S) (M372-00-061-38000-01)	Attached sheet 9
		Added below "DISASSEMBLY AND REASSEMBLY" (M372-01-111-04400-01)	Attached sheet 10
2010 LANCER SPORTBACK Workshop Manual	CG4E10E1-CD(ENG) CG4F10E1-CD(FRE) CG4G10E1-CD(GER) CG4S10E1-CD(SPA) CG4I10E1-CD(ITA) Russia: N/A	LUBRICANT(S) (M372-00-040-84400-01)	Attached sheet 8
		SPECIAL TOOL(S) (M372-00-061-10800-01)	Attached sheet 9
		Added below "DISASSEMBLY AND REASSEMBLY" (M372-01-110-96602-01)	Attached sheet 10
		LUBRICANT(S) (M372-00-041-00700-01)	Attached sheet 8
		SPECIAL TOOL(S) (M372-00-061-36801-01)	Attached sheet 9
		Added below "DISASSEMBLY AND REASSEMBLY" (M372-01-111-04401-01)	Attached sheet 10
2011 LANCER/LANCER SPORTBACK Workshop Manual	CG1E11E1-CD(ENG) CG1F11E1-CD(FRE) CG1G11E1-CD(GER) CG1S11E1-CD(SPA) CG1I11E1-CD(ITA) Russia: N/A	LUBRICANT(S) (M372-00-040-84400-01)	Attached sheet 8
		SPECIAL TOOL(S) (M372-00-061-10801-01)	Attached sheet 9
		Added below "DISASSEMBLY AND REASSEMBLY" (M372-01-110-96603-01)	Attached sheet 10
		LUBRICANT(S) (M372-00-041-00700-01)	Attached sheet 8
		SPECIAL TOOL(S) (M372-00-061-36802-01)	Attached sheet 9
		Added below "DISASSEMBLY AND REASSEMBLY" (M372-01-111-04402-01)	Attached sheet 10
2012 LANCER/LANCER SPORTBACK Workshop Manual	CGSE12E1-CD(ENG) CGSF12E1-CD(FRE) CGSG12E1-CD(GER) CGSS12E1-CD(SPA) CGSI12E1-CD(ITA) Russia: N/A	LUBRICANT(S) (M372-00-040-84400-01)	Attached sheet 8
		SPECIAL TOOL(S) (M372-00-061-10801-01)	Attached sheet 9
		Added below "DISASSEMBLY AND REASSEMBLY" (M372-01-110-96603-01)	Attached sheet 10
		LUBRICANT(S) (M372-00-041-00700-01)	Attached sheet 8
		SPECIAL TOOL(S) (M372-00-061-36802-01)	Attached sheet 9
		Added below "DISASSEMBLY AND REASSEMBLY" (M372-01-111-04402-01)	Attached sheet 10
2013 LANCER/LANCER SPORTBACK Workshop Manual	CCAE13E1-CD(ENG) CCAF13E1-CD(FRE) CCAG13E1-CD(GER) CCAS13E1-CD(SPA) CCAI13E1-CD(ITA) Russia: N/A	LUBRICANT(S) (M372-00-041-14800-01)	Attached sheet 8
		SPECIAL TOOL(S) (M372-00-061-10801-01)	Attached sheet 9
		Added below "DISASSEMBLY AND REASSEMBLY" (M372-01-110-96603-01)	Attached sheet 10
		LUBRICANT(S) (M372-00-041-00700-01)	Attached sheet 8
		SPECIAL TOOL(S) (M372-00-061-36802-01)	Attached sheet 9
		Added below "DISASSEMBLY AND REASSEMBLY" (M372-01-111-04402-01)	Attached sheet 10
2015 LANCER/LANCER SPORTBACK Workshop Manual	CCAE15E1-CD(ENG) CCAF15E1-CD(FRE) CCAG15E1-CD(GER) CCAS15E1-CD(SPA) CCAI15E1-CD(ITA) Russia: N/A	LUBRICANT(S) (M372-00-041-14800-01)	Attached sheet 8
		SPECIAL TOOL(S) (M372-00-061-10801-01)	Attached sheet 9
		Added below "DISASSEMBLY AND REASSEMBLY" (M372-01-110-96603-01)	Attached sheet 10
		LUBRICANT(S) (M372-00-041-00700-01)	Attached sheet 8
		SPECIAL TOOL(S) (M372-00-061-36802-01)	Attached sheet 9
		Added below "DISASSEMBLY AND REASSEMBLY" (M372-01-111-04404-01)	Attached sheet 10

Attached sheet 1

【EU/RUSSIA】

Applicable manual	Pub. No.	Applicable title (INFO-ID)	Contents
2008 LANCER EVOLUTION Workshop Manual	N/A	LUBRICANT(S) (M372-00-040-78100-01)	Attached sheet 8
		SPECIAL TOOL(S) (M372-00-061-17500-01)	Attached sheet 9
		Added below "DISASSEMBLY AND REASSEMBLY" (M372-01-110-82500-01)	Attached sheet 10
2009 LANCER EVOLUTION Workshop Manual	CGEE09E1-CD(ENG) CGEF09E1-CD(FRE) CGEG09E1-CD(GER) CGES09E1-CD(SPA) CGEI09E1-CD(ITA)	LUBRICANT(S) (M372-00-040-78100-01)	Attached sheet 8
		SPECIAL TOOL(S) (M372-00-061-17500-01)	Attached sheet 9
		Added below "DISASSEMBLY AND REASSEMBLY" (M372-01-110-82500-01)	Attached sheet 10
2010 LANCER EVOLUTION Workshop Manual	CGEE10E1-CD(ENG) CGEF10E1-CD(FRE) CGEG10E1-CD(GER) CGES10E1-CD(SPA) CGEI10E1-CD(ITA) RUSSIA: N/A	LUBRICANT(S) (M372-00-040-78100-01)	Attached sheet 8
		SPECIAL TOOL(S) (M372-00-061-17500-01)	Attached sheet 9
		Added below "DISASSEMBLY AND REASSEMBLY" (M372-01-110-82500-01)	Attached sheet 10
2011 LANCER EVOLUTION Workshop Manual	CGEE11E1-CD(ENG) CGEF11E1-CD(FRE) CGEG11E1-CD(GER) CGES11E1-CD(SPA) CGEI11E1-CD(ITA)	LUBRICANT(S) (M372-00-040-68400-01)	Attached sheet 8
		SPECIAL TOOL(S) (M372-00-061-33501-01)	Attached sheet 9
		Added below "DISASSEMBLY AND REASSEMBLY" (M372-01-110-99902-01)	Attached sheet 10
2012 LANCER EVOLUTION Workshop Manual	CGEE12E1-CD(ENG) CGEF12E1-CD(FRE) CGEG12E1-CD(GER) CGES12E1-CD(SPA) CGEI12E1-CD(ITA) RUSSIA: N/A	LUBRICANT(S) (M372-00-040-68400-01)	Attached sheet 8
		SPECIAL TOOL(S) (M372-00-061-33501-01)	Attached sheet 9
		Added below "DISASSEMBLY AND REASSEMBLY" (M372-01-110-99902-01)	Attached sheet 10
2013 LANCER EVOLUTION Workshop Manual	CCZE13E1-CD(ENG) CCZF13E1-CD(FRE) CCZG13E1-CD(GER) CCZS13E1-CD(SPA) CCZI13E1-CD(ITA) RUSSIA: N/A	LUBRICANT(S) (M372-00-040-78100-01)	Attached sheet 8
		SPECIAL TOOL(S) (M372-00-061-33501-01)	Attached sheet 9
		Added below "DISASSEMBLY AND REASSEMBLY" (M372-01-110-99903-01)	Attached sheet 10

【CHINA】

Applicable manual	Pub. No.	Applicable title (INFO-ID)	Contents
2008 OUTLANDER Workshop Manual	DRAFT	LUBRICANT(S) (M372-00-040-63900-01)	Attached sheet 8
		SPECIAL TOOL(S) (M372-00-061-23800-01)	Attached sheet 9
		Added below "DISASSEMBLY AND REASSEMBLY" (M372-01-110-86900-01)	Attached sheet 10
2009 LANCER EX Workshop Manual	DRAFT	LUBRICANT(S) (M372-00-040-84400-01)	Attached sheet 8
		SPECIAL TOOL(S) (M372-00-061-10800-01)	Attached sheet 9
		Added below "DISASSEMBLY AND REASSEMBLY" (M372-01-111-19600-01)	Attached sheet 10
2009 LANCER EVOLUTION Workshop Manual	DRAFT	LUBRICANT(S) (M372-00-040-68401-01)	Attached sheet 8
		SPECIAL TOOL(S) (M372-00-061-33500-01)	Attached sheet 9
		Added below "DISASSEMBLY AND REASSEMBLY" (M372-01-110-99901-01)	Attached sheet 10
2010 LANCER EVOLUTION Workshop Manual	DRAFT	LUBRICANT(S) (M372-00-040-68401-01)	Attached sheet 8
		SPECIAL TOOL(S) (M372-00-061-33500-01)	Attached sheet 9
		Added below "DISASSEMBLY AND REASSEMBLY" (M372-01-110-99901-01)	Attached sheet 10

Attached sheet 1

【GENERAL EXPORT/GCC】

Applicable manual	Pub. No.	Applicable title (INFO-ID)	Contents
2007 OUTLANDER Workshop Manual	PWRE0607R	LUBRICANT(S) (M372-00-040-63900-01)	Attached sheet 8
		SPECIAL TOOL(S) (M372-00-060-96700-01)	Attached sheet 9
		Added below "DISASSEMBLY AND REASSEMBLY" (M372-01-110-59100-01)	Attached sheet 10
2008 OUTLANDER Workshop Manual	PWRE0707R(ENG) PWRS0708R(SPA)	LUBRICANT(S) (M372-00-040-63900-01)	Attached sheet 8
		SPECIAL TOOL(S) (M372-00-060-96701-01)	Attached sheet 9
		Added below "DISASSEMBLY AND REASSEMBLY" (M372-01-110-59101-01)	Attached sheet 10
2009 OUTLANDER Workshop Manual	PWRE0810R(ENG) PWRS0811R(SPA)	LUBRICANT(S) (M372-00-040-63901-01)	Attached sheet 8
		SPECIAL TOOL(S) (M372-00-061-23801-01)	Attached sheet 9
		Added below "DISASSEMBLY AND REASSEMBLY" (M372-01-110-86901-01)	Attached sheet 10
2008 LANCER/LANCER EX Workshop Manual	PWME0701R(ENG) PWMS0702R(SPA)	LUBRICANT(S) (M372-00-040-68400-01)	Attached sheet 8
		SPECIAL TOOL(S) (M372-00-061-04500-01)	Attached sheet 9
		Added below "DISASSEMBLY AND REASSEMBLY" (M372-01-110-67600-01)	Attached sheet 10
		Added below "SERVICE SPECIFICATION(S) " (M372-00-031-15200-01)	Attached sheet 8
		SPECIAL TOOL(S) (M372-00-061-03400-01)	Attached sheet 9
		Added below "DISASSEMBLY AND REASSEMBLY" (M372-01-170-40700-01)	Attached sheet 10
2009 LANCER/LANCER EX Workshop Manual	PWME0802R(ENG) PWMS0803R(SPA)	LUBRICANT(S) (M372-00-040-84400-01)	Attached sheet 8
		SPECIAL TOOL(S) (M372-00-061-10800-01)	Attached sheet 9
		Added below "DISASSEMBLY AND REASSEMBLY" (M372-01-110-96601-01)	Attached sheet 10
		LUBRICANT(S) (M372-00-040-84400-01)	Attached sheet 8
		SPECIAL TOOL(S) (M372-00-061-38000-01)	Attached sheet 9
		Added below "DISASSEMBLY AND REASSEMBLY" (M372-01-111-04400-01)	Attached sheet 10
2010 LANCER/LANCER EX Workshop Manual	PWME0901R(ENG) PWMS0902R(SPA)	LUBRICANT(S) (M372-00-040-84400-01)	Attached sheet 8
		SPECIAL TOOL(S) (M372-00-061-10800-01)	Attached sheet 9
		Added below "DISASSEMBLY AND REASSEMBLY" (M372-01-111-19600-01)	Attached sheet 10
		LUBRICANT(S) (M372-00-040-84401-01)	Attached sheet 8
		SPECIAL TOOL(S) (M372-00-061-38001-01)	Attached sheet 9
		Added below "DISASSEMBLY AND REASSEMBLY" (M372-01-111-04401-01)	Attached sheet 10

【GENERAL EXPORT/GCC/ AUSTRALIA/ NEW ZEALAND】

Applicable manual	Pub. No.	Applicable title (INFO-ID)	Contents
2009 LANCER EVOLUTION Workshop Manual	PWSE0801R-A	LUBRICANT(S) (M372-00-040-68401-01)	Attached sheet 8
		SPECIAL TOOL(S) (M372-00-061-33500-01)	Attached sheet 9
		Added below "DISASSEMBLY AND REASSEMBLY" (M372-01-110-99901-01)	Attached sheet 10
2010 LANCER EVOLUTION Workshop Manual	PWSE0905R	LUBRICANT(S) (M372-00-040-68401-01)	Attached sheet 8
		SPECIAL TOOL(S) (M372-00-061-33500-01)	Attached sheet 9
		Added below "DISASSEMBLY AND REASSEMBLY" (M372-01-110-99901-01)	Attached sheet 10

【Thailand】

Applicable manual	Pub. No.	Applicable title (INFO-ID)	Contents
2009 LANCER Workshop Manual	DRAFT	LUBRICANT(S) (M372-00-040-84400-01)	Attached sheet 8
		SPECIAL TOOL(S) (M372-00-061-65800-01)	Attached sheet 9
		Added below "DISASSEMBLY AND REASSEMBLY" (M372-01-111-37800-01)	Attached sheet 10

Attached sheet 1

【 GENERAL EXPORT(JAPAN SPEC)】

Applicable manual	Pub. No.	Applicable title (INFO-ID)	Contents
2006 OUTLANDER Workshop Manual	PWRE0503R	LUBRICANT(S) (M372-00-040-52100-01)	Attached sheet 8
		SPECIAL TOOL(S) (M372-00-060-76300-01)	Attached sheet 9
		Added below "DISASSEMBLY AND REASSEMBLY" (M372-01-110-45000-01)	Attached sheet 10
2008 OUTLANDER Workshop Manual	PWRE0712R	LUBRICANT(S) (M372-00-040-63900-01)	Attached sheet 8
		SPECIAL TOOL(S) (M372-00-061-23800-01)	Attached sheet 9
		Added below "DISASSEMBLY AND REASSEMBLY" (M372-01-110-97700-01)	Attached sheet 10
2007 DELICA D:5 Workshop Manual	PWRE0711R(ENG)	LUBRICANT(S) (M372-00-040-67300-01)	Attached sheet 8
		SPECIAL TOOL(S) (M372-00-061-01200-01)	Attached sheet 9
		Added below "DISASSEMBLY AND REASSEMBLY" (M372-01-110-73900-01)	Attached sheet 10
2009 DELICA D:5 Workshop Manual	PWRE0804R(ENG)	LUBRICANT(S) (M372-00-040-67300-01)	Attached sheet 8
		SPECIAL TOOL(S) (M372-00-061-01200-01)	Attached sheet 9
		Added below "DISASSEMBLY AND REASSEMBLY" (M372-01-111-01100-01)	Attached sheet 10

【AUSTRALIA/ NEW ZEALAND】

Applicable manual	Pub. No.	Applicable title (INFO-ID)	Contents
2007 OUTLANDER Workshop Manual	MR936083 NZ: DRAFT	LUBRICANT(S) (M372-00-040-63900-01)	Attached sheet 8
		SPECIAL TOOL(S) (M372-00-060-96700-01)	Attached sheet 9
		Added below "DISASSEMBLY AND REASSEMBLY" (M372-01-110-59100-01)	Attached sheet 10
2008 OUTLANDER Workshop Manual	MR936474 NZ: DRAFT	LUBRICANT(S) (M372-00-040-63900-01)	Attached sheet 8
		SPECIAL TOOL(S) (M372-00-061-23800-01)	Attached sheet 9
		Added below "DISASSEMBLY AND REASSEMBLY" (M372-01-110-86900-01)	Attached sheet 10
2009 OUTLANDER Workshop Manual	MR936477 NZ: DRAFT	LUBRICANT(S) (M372-00-040-63901-01)	Attached sheet 8
		SPECIAL TOOL(S) (M372-00-061-23801-01)	Attached sheet 9
		Added below "DISASSEMBLY AND REASSEMBLY" (M372-01-110-86901-01)	Attached sheet 10
2010 OUTLANDER Workshop Manual	MR936925 NZ: DRAFT	LUBRICANT(S) (M372-00-040-77002-01)	Attached sheet 8
		SPECIAL TOOL(S) (M372-00-061-23801-01)	Attached sheet 9
		Added below "DISASSEMBLY AND REASSEMBLY" (M372-01-111-05501-01)	Attached sheet 10
2008 LANCER Workshop Manual	MR936470 NZ: DRAFT	LUBRICANT(S) (M372-00-040-76900-01)	Attached sheet 8
		SPECIAL TOOL(S) (M372-00-061-15300-01)	Attached sheet 9
		Added below "DISASSEMBLY AND REASSEMBLY" (M372-01-110-80300-01)	Attached sheet 10
2009 LANCER Workshop Manual	MR936503 NZ: DRAFT	LUBRICANT(S) (M372-00-040-76900-01)	Attached sheet 8
		SPECIAL TOOL(S) (M372-00-061-15300-01)	Attached sheet 9
		Added below "DISASSEMBLY AND REASSEMBLY" (M372-01-111-07700-01)	Attached sheet 10
2009 LANCER SPORTBACK Workshop Manual	MR936570 NZ: DRAFT	LUBRICANT(S) (M372-00-040-84400-01)	Attached sheet 8
		SPECIAL TOOL(S) (M372-00-061-15300-01)	Attached sheet 9
		Added below "DISASSEMBLY AND REASSEMBLY" (M372-01-111-07700-01)	Attached sheet 10
2010 LANCER Workshop Manual	MR936920 NZ: DRAFT	LUBRICANT(S) (M372-00-040-76900-01)	Attached sheet 8
		SPECIAL TOOL(S) (M372-00-061-15300-01)	Attached sheet 9
		Added below "DISASSEMBLY AND REASSEMBLY" (M372-01-111-37800-01)	Attached sheet 10
2010 LANCER SPORTBACK Workshop Manual	MR936922 NZ: DRAFT	LUBRICANT(S) (M372-00-040-84400-01)	Attached sheet 8
		SPECIAL TOOL(S) (M372-00-061-66900-01)	Attached sheet 9
		Added below "DISASSEMBLY AND REASSEMBLY" (M372-01-111-38900-01)	Attached sheet 10

LUBRICANTS

Item	Specified lubricant	Quantity
Tie rod end ball joint dust cover	Multipurpose grease SAE J310, NLGI No.2 or equivalent	5.0 ± 1.0 g (0.18 ± 0.04 oz)

<Added>

SPECIAL TOOLS

Tool	Tool number and name	Supersession	Application
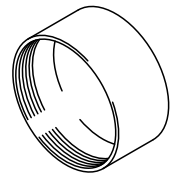	MD998812 Cap installer	—	Tie-rod end ball joint cover installation
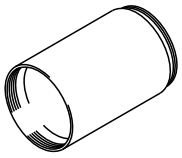	MD998813 Installer 100	—	
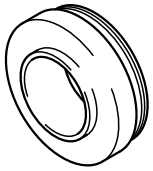	MD998818 Installer adapter	—	
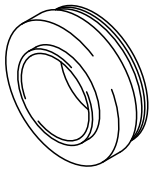	MD998820 Installer adapter	—	

<Added>

<Added>

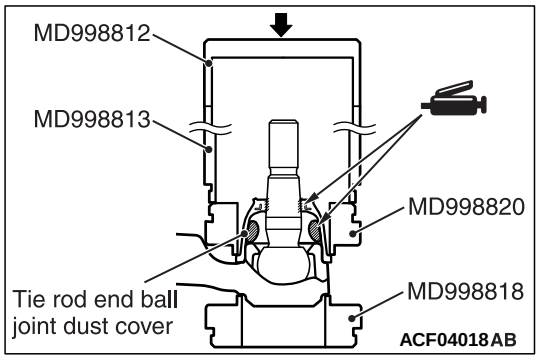

TIE ROD END BALL JOINT DUST COVER REPLACEMENT

⚠ CAUTION

If the tie rod end ball joint dust cover is damaged accidentally during service work, replace the tie rod end ball joint dust cover as follows:

1. Fill and apply the specified grease into the inside and lip of the tie rod end ball joint dust cover.
   - **Specified grease: Multipurpose grease SAE J310, NLGI No.2 or equivalent**
   - **Usage: 5.0 ± 1.0 g (0.20 ± 0.04 oz)**

   NOTE: Wipe off the grease on the ball joint so that the amount of grease inside the tie rod end ball joint dust cover does not exceed the total amount.
2. Use the following special tools to press-fit the tie rod end ball joint dust cover into the tie rod end.
   - Cap installer (MD998812)
   - Installer 100 (MD998813)
   - Installer adapter (MD998818)
   - Installer adapter (MD998820)

   NOTE:
   - *There should be no grease on the thread of the ball joint.*
   - *There should be no clearance between the tie rod end ball joint dust cover and the tie rod end.*
3. Check the tie rod end ball joint dust cover for cracks or damage by pushing it with your finger.

LUBRICANTS

Item	Specified lubricant	Quantity
Tie rod end ball joint dust cover	Multipurpose grease SAE J310, NLGI No.2 or equivalent	5.0 ± 1.0 g

<Added>

SPECIAL TOOLS

Tool	Number	Name	Use
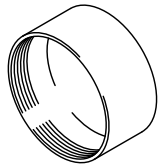	MD998812	Cap installer	Tie-rod end ball joint cover installation
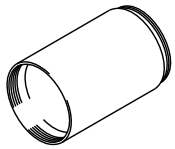	MD998813	Installer 100	
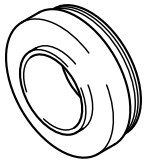	MD998818	Installer adapter	
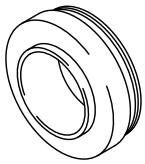	MD998820	Installer adapter	

<Added>

<Added>

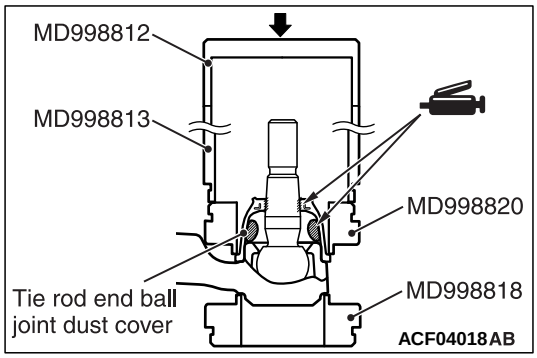

TIE ROD END BALL JOINT DUST COVER REPLACEMENT

CAUTION

If the tie rod end ball joint dust cover is damaged accidentally during service work, replace the tie rod end ball joint dust cover as follows:

1. Fill and apply the specified grease into the inside and lip of the tie rod end ball joint dust cover.
   - **Specified grease: Multipurpose grease SAE J310, NLGI No.2 or equivalent**
   - **Usage: 5.0 ± 1.0 g**

   NOTE: Wipe off the grease on the ball joint so that the amount of grease inside the tie rod end ball joint dust cover does not exceed the total amount.
2. Use the following special tools to press-fit the tie rod end ball joint dust cover into the tie rod end.
   - Cap installer (MD998812)
   - Installer 100 (MD998813)
   - Installer adapter (MD998818)
   - Installer adapter (MD998820)

   NOTE:
   - *There should be no grease on the thread of the ball joint.*
   - *There should be no clearance between the tie rod end ball joint dust cover and the tie rod end.*
3. Check the tie rod end ball joint dust cover for cracks or damage by pushing it with your finger.