SERVICE BULLETIN

MITSUBISHI MOTORS

GLOBAL AFTER SALES OFFICE, MITSUBISHI MOTORS CORPORATION

PURPOSE : CHANGE	ISSUE NO. : MSB-15EXML51-001	DATE : 2015-07-08
SUBJECT : Abolition of the screw for installation of the side turn-signal light assembly in the door mirror		<DESTINATION/MODEL> (As per attached sheet 1) <M/Y> 13.5-15.5
GROUP : Gr:51(Exterior)		ASX/OUTLANDER SPORT/RVR(GA0W)

1. Description :

Please refer to the attached document for the information about the change of mention in the applicable service manual.

2. Affected service manuals :

Please refer to the attached document (Attached sheet 1)

3. About the details :

Please refer to the attached document (Attached sheet 3-5)

4. Effective time : From the vehicles produced in the end of March 2015.

Attached sheet 1

<MMNA/MEXICO>

Applicable manual	Pub. No.	Applicable title (INFO ID)	Content
2015 ASX/OUTLANDER SPORT/RVR Service manual	MSCD-017B-2015 MEXICO:DRAFT	DOOR MIRROR REMOVAL AND INSTALLATION (M511-00-641-91400-01)	Attached sheet 3

<EU/RUSSIA/SOUTH AFRICA>

Applicable manual	Pub. No.	Applicable title (INFO ID)	Content
2014 ASX Workshop manual	CGAE14E1-CD (ENG) CGAF14E1-CD (FRE) CGAG14E1-CD (GER) CGAS14E1-CD (SPA) CGAI14E1-CD (ITA) RUSSIA:N/A SOUTH AFRICA:DRAFT	DOOR MIRROR REMOVAL AND INSTALLATION (M511-00-641-56100-01)	Attached sheet 4
2015 ASX Workshop manual	CGAE15E1-CD (ENG) CGAF15E1-CD (FRE) CGAG15E1-CD (GER) CGAS15E1-CD (SPA) CGAI15E1-CD (ITA) RUSSIA:N/A SOUTH AFRICA:DRAFT		
2015.5 ASX Workshop manual	CGAE15E2-CD (ENG) CGAF15E2-CD (FRE) CGAG15E2-CD (GER) CGAS15E2-CD (SPA) CGAI15E2-CD (ITA) RUSSIA:N/A SOUTH AFRICA:DRAFT		

<G.EXP / GCC / MMAL / NZ>

Applicable manual	Pub. No.	Applicable title (INFO ID)	Content
2014 ASX/OUTLANDER SPORT Workshop manual	G.EXP/GCC: MSB-15XL51-001 MMAL:AU900410 NZ:DRAFT	DOOR MIRROR REMOVAL AND INSTALLATION (M511-00-641-98100-01)	Attached sheet 4

<BRAZIL KD>

Applicable manual	Pub. No.	Applicable title (INFO ID)	Content
2013.5 ASX Workshop manual	DRAFT	DOOR MIRROR REMOVAL AND INSTALLATION (M511-00-641-85100-01)	Attached sheet 5

Attached sheet 3

TYPE 2 (WITH SIDE TURN-SIGNAL LIGHT)

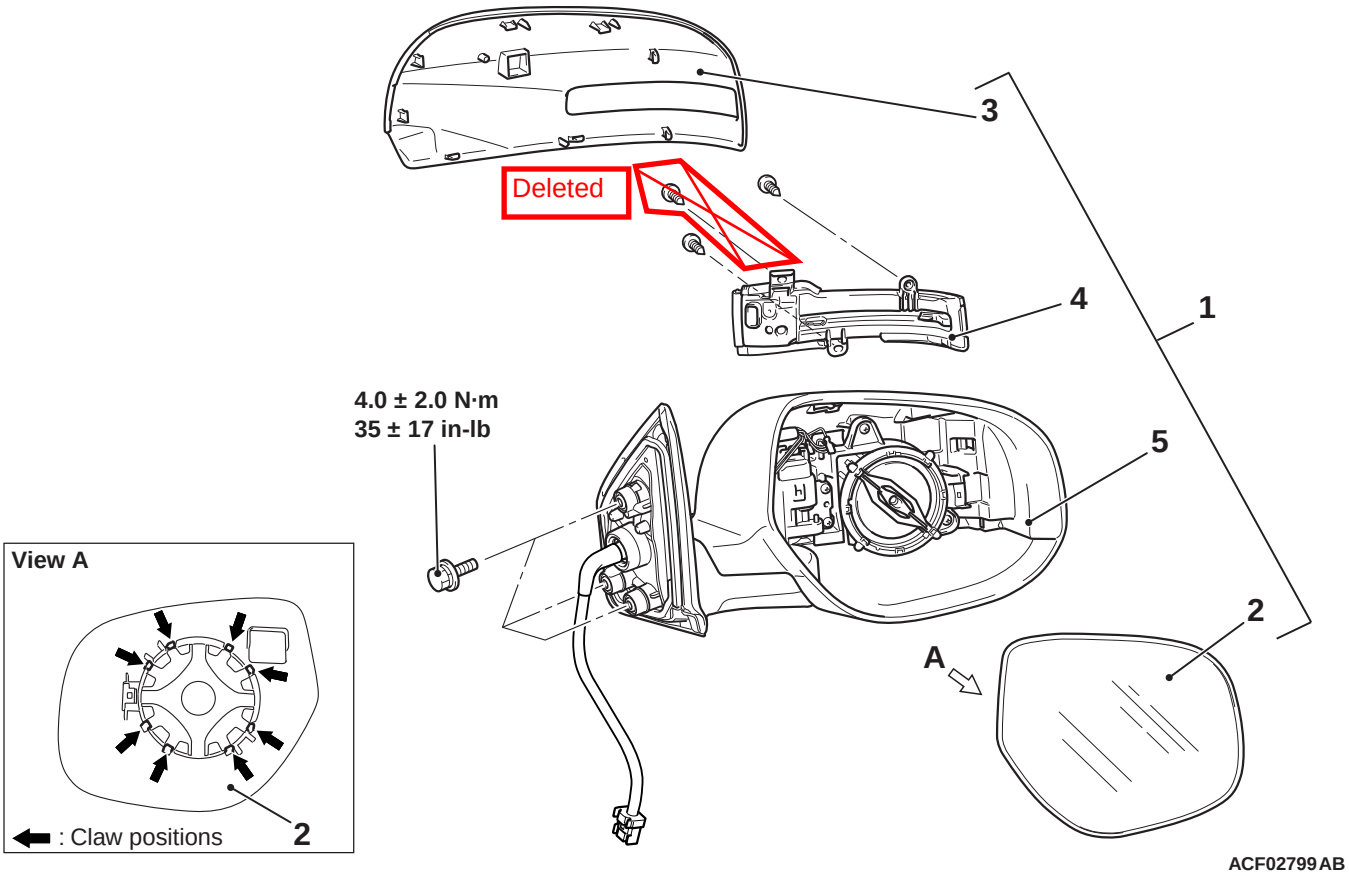

Door mirror assembly removal steps

- Front door sash trim (Refer to GROUP 54A – Speaker)
- Front door trim assembly (Refer to GROUP 52A – Door Trim)
- Door mirror connector connection

1. Door mirror assembly

<<**A**>>

<<**C**>>

Door mirror housing removal steps

2. Mirror
3. Door mirror outer cover
4. Side turn-signal light assembly <With side turn-signal light>
5. Door mirror housing

Attached sheet 4

TYPE 2 (WITH SIDE TURN-SIGNAL LAMP)

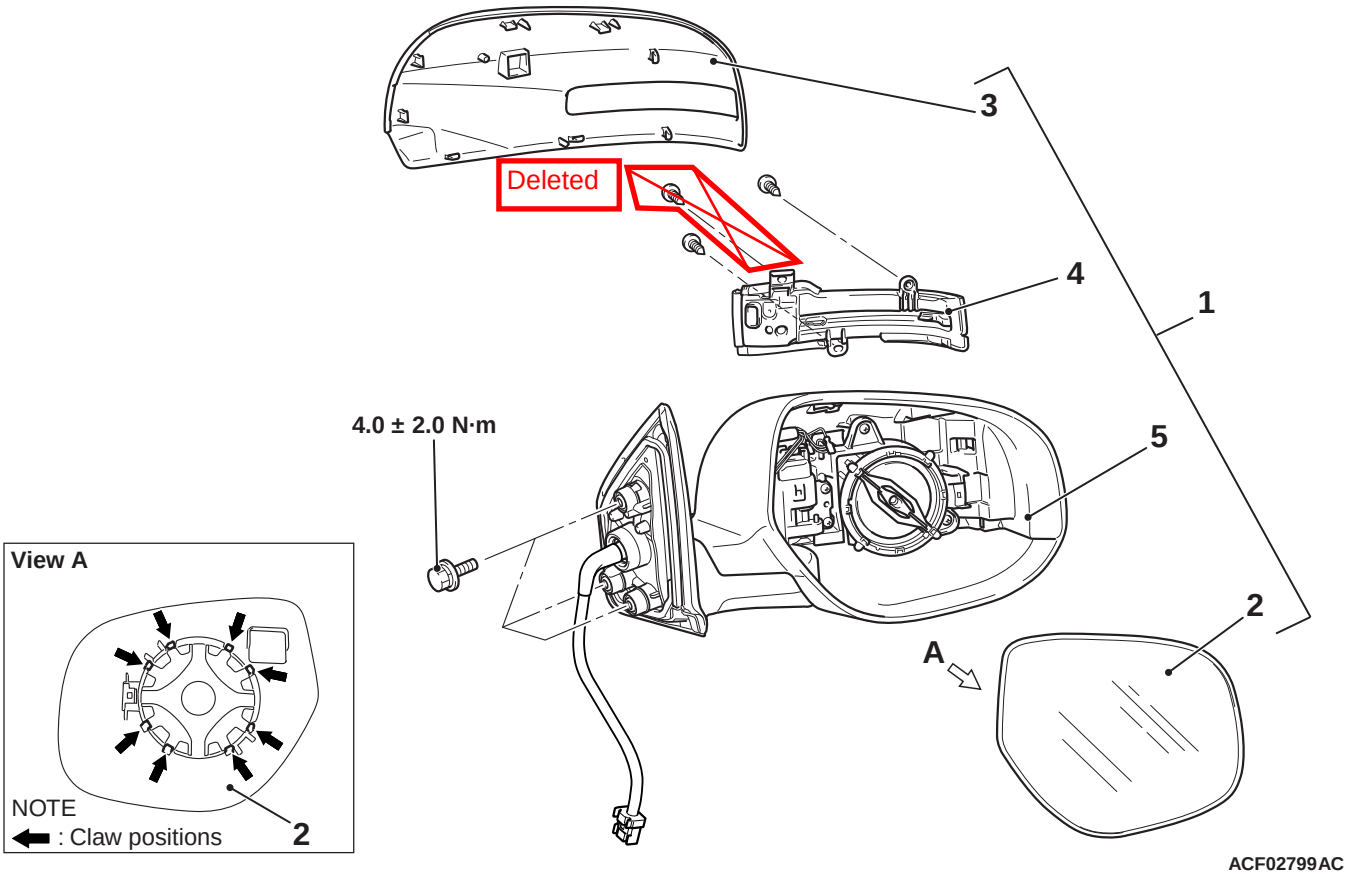

Door mirror assembly removal steps

- Front door sash trim (Refer to GROUP 54A – Speaker)
- Front door trim assembly (Refer to GROUP 52A – Door Trim)
- Door mirror connector connection

1. Door mirror assembly

<<**A**>>
<<**C**>>

Door mirror housing removal steps

2. Mirror
3. Door mirror outer cover
4. Side turn-signal lamp assembly <With side turn-signal lamp>
5. Door mirror housing

Attached sheet 5

REMOVAL AND INSTALLATION

M1511006401851

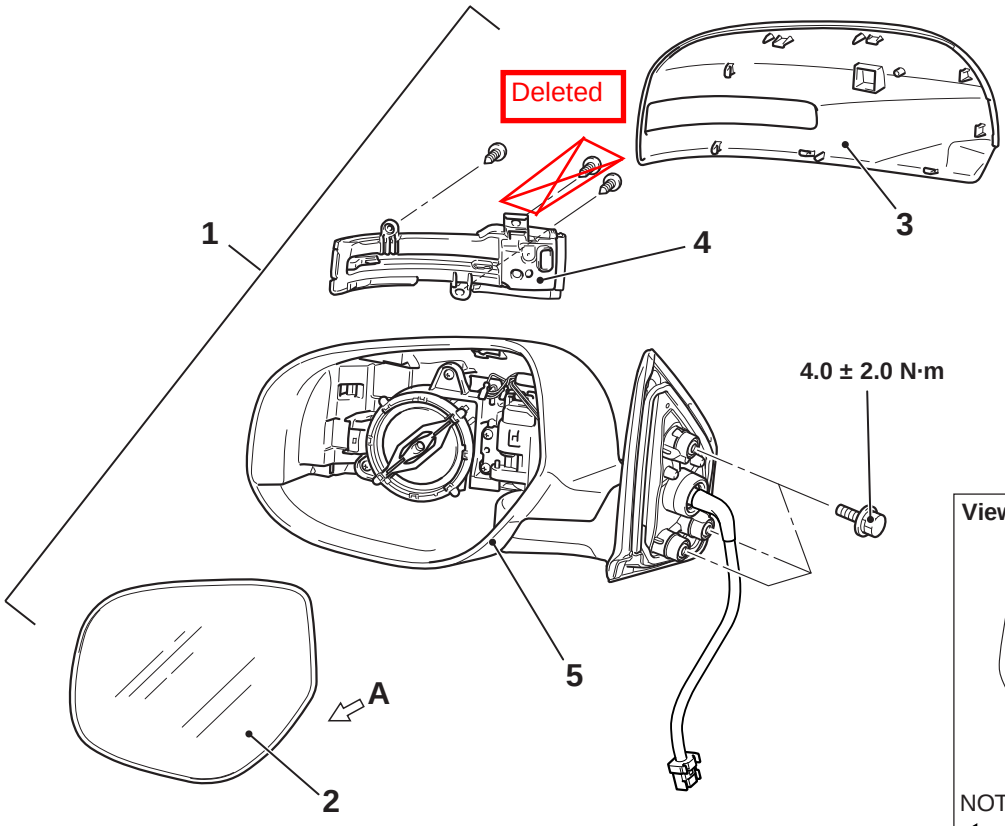

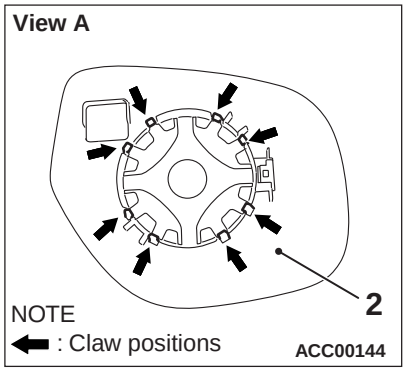

ACF02809AB

Door mirror assembly removal steps

- Front door sash trim (Refer to GROUP 54A – Speaker)
- Front door trim assembly (Refer to GROUP 52A – Door Trim)
- Door mirror connector connection

1. Door mirror assembly

Door mirror housing removal steps

<<A>> 2. Mirror
<<B>> 3. Door mirror outer cover
4. Side turn-signal lamp assembly <With side turn-signal lamp>
5. Door mirror housing

REMOVAL SERVICE POINT

<<A>> MIRROR REMOVAL

⚠ CAUTION

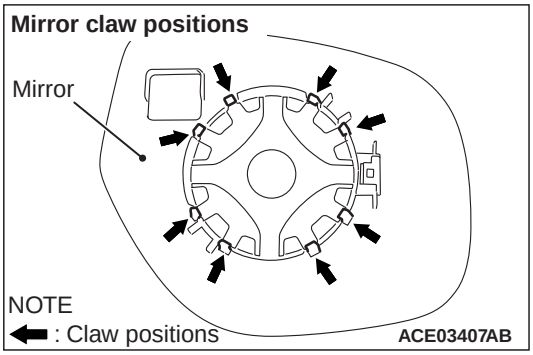

The claw of the mirror is prone to breakage when working in cold temperatures. Always use a hair drier or the like to warm up the mirror claw and its periphery to 20°C or higher prior to works. When the mirror is heated too quickly from its cold state, it may be broken.

1. Disengage the claw behind the mirror from the door mirror housing.
2. Disconnect the connectors of the heated mirror.