SERVICE BULLETIN

MITSUBISHI MOTORS

GLOBAL AFTER SALES OFFICE, MITSUBISHI MOTORS CORPORATION

PURPOSE : CHANGE	ISSUE NO. : MSB-15EXML54-001A	DATE : 2015-09-10
SUBJECT : Changes and additions of the inspection of the on-board charger and the quick charging system		<DESTINATION/MODEL> (As per attached sheet 1) <M/Y> 11-16
GROUP : Gr:54(Chassis electrical)		i-MiEV(HA3W)

1. Description :

Please refer to the attached document for the information about the change of mention in the applicable service manual.

2. Affected service manuals :

Please refer to the attached document (Attached sheet 1)

3. About the details :

Please refer to the attached document (Attached sheet 3)

Revision history

		MSB No.	Issued Date	
Original		MSB-15EXML54-001	Not issued	
Revision	A	MSB-15EXML54-001A	2015/9/10	※This time

Attached sheet 1 A

〈For overseas market〉
〈EU〉

Applicable manual	Pub. No.	Applicable title (INFO ID)	Content
2011 i-MiEV Workshop Manual	ENG: CHAE11E1-CD FRE: CHAF11E1-CD GER: CHAG11E1-CD SPA: CHAS11E1-CD ITA: CHAI11E1-CD	INSPECTION PROCEDURE 10: CHARGING DOES NOT START, OR THE CHARGING INDICATOR IS NOT ILLUMINATED WHEN THE CHARGER IS CONNECTED TO DOMESTIC POWER SUPPLY (M549-50-220-01400-01)	Attached sheet 3 (1/21), (2/21),(5/21)
		TROUBLE SYMPTOM CHART (M549-22-250-04900-01)	Attached sheet 3 (6/21)
		Added below “TROUBLE SYMPTOM CHART” (M549-22-250-04900-01)	Attached sheet 3 (8/21)- (10/21)
2012 i-MiEV Workshop Manual	ENG: CHAE12E1-CD FRE: CHAF12E1-CD GER: CHAG12E1-CD SPA: CHAS12E1-CD ITA: CHAI12E1-CD	INSPECTION PROCEDURE 10: CHARGING DOES NOT START, OR THE CHARGING INDICATOR IS NOT ILLUMINATED WHEN THE CHARGER IS CONNECTED TO DOMESTIC POWER SUPPLY (M549-50-220-01400-01)	Attached sheet 3 (1/21), (2/21),(5/21)
		TROUBLE SYMPTOM CHART (M549-22-250-05000-01)	Attached sheet 3 (6/21)
		Added below “TROUBLE SYMPTOM CHART” (M549-22-250-05000-01)	Attached sheet 3 (8/21)- (10/21)
2013.5 i-MiEV Workshop Manual	ENG: CHAE13E1-CD FRE: CHAF13E1-CD GER: CHAG13E1-CD SPA: CHAS13E1-CD ITA: CHAI13E1-CD	INSPECTION PROCEDURE 11: CHARGING DOES NOT START, OR THE CHARGING INDICATOR IS NOT ILLUMINATED WHEN THE CHARGER IS CONNECTED TO DOMESTIC POWER SUPPLY (M549-50-220-04700-01)	Attached sheet 3 (1/21), (2/21),(5/21)
		TROUBLE SYMPTOM CHART (M549-22-250-05000-01)	Attached sheet 3 (6/21)
		Added below “TROUBLE SYMPTOM CHART” (M549-22-250-05000-01)	Attached sheet 3 (8/21)- (10/21)
2015 i-MiEV Workshop Manual	ENG: CHAE15E1-CD FRE: CHAF15E1-CD GER: CHAG15E1-CD SPA: CHAS15E1-CD ITA: CHAI15E1-CD	INSPECTION PROCEDURE 14: CHARGING DOES NOT START, OR THE CHARGING INDICATOR IS NOT ILLUMINATED WHEN THE CHARGER IS CONNECTED TO DOMESTIC POWER SUPPLY (M549-50-220-10000-01)	Attached sheet 3 (3/21)- (5/21)
		INSPECTION CHART FOR TROUBLE SYMPTOMS (M549-22-250-050001-02)	Attached sheet 3 (7/21)
		Added below “INSPECTION PROCEDURE 1: NON-REMOVAL QUICK CHARGING GUN” (M549-27-360-08800-01)	Attached sheet 3 (8/21)- (10/21)

⚠A

<MMAL/NZ>

Applicable manual	Pub. No.	Applicable title (INFO ID)	Content
2013 i-MiEV Workshop Manual	AU900303 NZ:DRAFT	INSPECTION PROCEDURE 10: CHARGING DOES NOT START, OR THE CHARGING INDICATOR IS NOT ILLUMINATED WHEN THE CHARGER IS CONNECTED TO DOMESTIC POWER SUPPLY (M549-50-220-01400-01)	Attached sheet 3 (1/21), (2/21),(5/21)
		TROUBLE SYMPTOM CHART (M549-22-250-05000-01)	Attached sheet 3 (6/21)
		Added below "TROUBLE SYMPTOM CHART" (M549-22-250-05000-01)	Attached sheet 3 (8/21)- (10/21)
2013.5 i-MiEV Workshop Manual	AU900414 NZ:DRAFT	INSPECTION PROCEDURE 11: CHARGING DOES NOT START, OR THE CHARGING INDICATOR IS NOT ILLUMINATED WHEN THE CHARGER IS CONNECTED TO DOMESTIC POWER SUPPLY (M549-50-220-04700-01)	Attached sheet 3 (1/21), (2/21),(5/21)
		TROUBLE SYMPTOM CHART (M549-22-250-05000-01)	Attached sheet 3 (6/21)
		Added below "TROUBLE SYMPTOM CHART" (M549-22-250-05000-01)	Attached sheet 3 (8/21)- (10/21)
2014 i-MiEV Workshop Manual	AU900411 NZ:DRAFT	INSPECTION PROCEDURE 14: CHARGING DOES NOT START, OR THE CHARGING INDICATOR IS NOT ILLUMINATED WHEN THE CHARGER IS CONNECTED TO DOMESTIC POWER SUPPLY (M549-50-220-10000-01)	Attached sheet 3 (3/21)- (5/21)
		INSPECTION CHART FOR TROUBLE SYMPTOMS (M549-22-250-050001-02)	Attached sheet 3 (7/21)
		Added below "INSPECTION PROCEDURE 1: NON-REMOVAL QUICK CHARGING GUN" (M549-27-360-08800-01)	Attached sheet 3 (8/21)- (10/21)

⚠A

<G.EXP>

Applicable manual	Pub. No.	Applicable title (INFO ID)	Content
2013.5 i-MiEV Workshop Manual	ENG: CHAE13E1-CD FRE: CHAF13E1-CD GER: CHAG13E1-CD SPA: CHAS13E1-CD ITA: CHAI13E1-CD	INSPECTION PROCEDURE 11: CHARGING DOES NOT START, OR THE CHARGING INDICATOR IS NOT ILLUMINATED WHEN THE CHARGER IS CONNECTED TO DOMESTIC POWER SUPPLY (M549-50-220-04700-01)	Attached sheet 3 (1/21), (2/21),(5/21)
		TROUBLE SYMPTOM CHART (M549-22-250-05000-01)	Attached sheet 3 (6/21)
		Added below "TROUBLE SYMPTOM CHART" (M549-22-250-05000-01)	Attached sheet 3 (8/21)- (10/21)

<MMNA>

Applicable manual	Pub. No.	Applicable title (INFO ID)	Contents
2012 i-MiEV Service Manual CD-ROM	MSCD-018B-2012	INSPECTION PROCEDURE 10: CHARGING DOES NOT START, OR THE CHARGING INDICATOR IS NOT ILLUMINATED WHEN THE CHARGER IS CONNECTED TO DOMESTIC POWER SUPPLY (M549-50-220-01400-01)	Attached sheet 3 (11/21)-(13/21)
		TROUBLE SYMPTOM CHART (M549-22-250-05000-01)	Attached sheet 3 (16/21)
		Added below “TROUBLE SYMPTOM CHART” (M549-22-250-05000-01)	Attached sheet 3 (18/21)-(21/21)
2014 i-MiEV Service Manual CD-ROM	MSCD-018B-2014	INSPECTION PROCEDURE 12: CHARGING DOES NOT START, OR THE CHARGING INDICATOR IS NOT ILLUMINATED WHEN THE CHARGER IS CONNECTED TO DOMESTIC POWER SUPPLY (M549-50-220-04700-01)	Attached sheet 3 (11/21)-(13/21)
		TROUBLE SYMPTOM CHART (M549-22-250-08300-01)	Attached sheet 3 (16/21)
		Added below “TROUBLE SYMPTOM CHART” (M549-22-250-08300-01)	Attached sheet 3 (18/21)-(21/21)
2016 i-MiEV Service Manual CD-ROM	—	INSPECTION PROCEDURE 14: CHARGING DOES NOT START, OR THE CHARGING INDICATOR IS NOT ILLUMINATED WHEN THE CHARGER IS CONNECTED TO DOMESTIC POWER SUPPLY (M549-50-220-10001-02)	Attached sheet 3 (14/21)-(15/21)
		INSPECTION CHART FOR TROUBLE SYMPTOMS (M549-22-250-08301-02)	Attached sheet 3 (17/21)
		Added below “INSPECTION PROCEDURE 1: NON-REMOVAL QUICK CHARGING GUN” (M549-27-360-10700-01)	Attached sheet 3 (18/21)-(21/21)

Attached sheet 3 (1/21)

Connectors: B-301, B-310 <LHD>

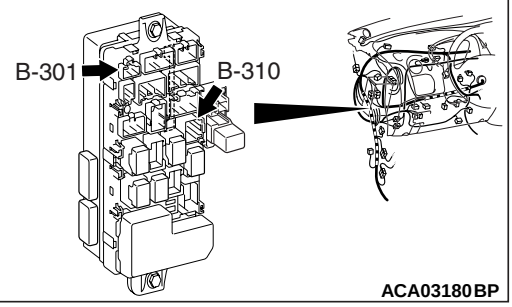

Connectors: B-301, B-310 <RHD>

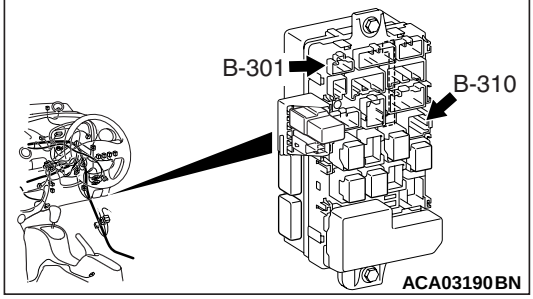

Connector: C-106
Rear floor lower part

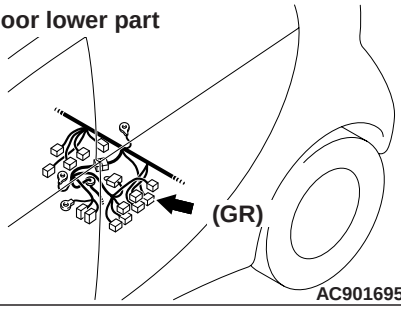

Connectors: G-03, G-04, G-11

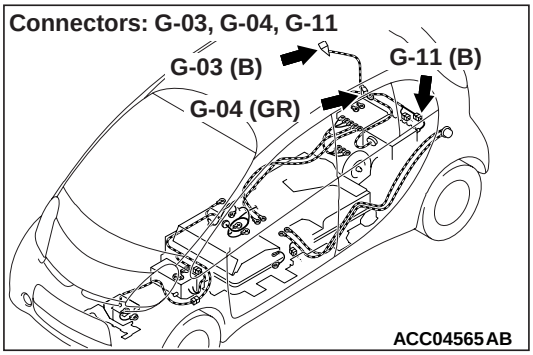

Connector: E-03

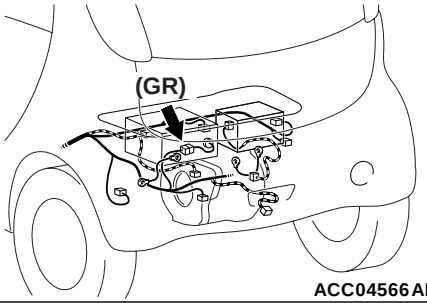

COMMENTS ON TROUBLE SYMPTOM

- The cause is assumed to be low environment temperature at charging.

PROBABLE CAUSES

- Damaged wiring harness or connector(s)
- Malfunction of the fuse and fusible link
- Malfunction of the charging cable
- Malfunction of the on board charger/DC-DC converter
- Malfunction of the domestic power supply facility

DIAGNOSIS PROCEDURE

<Added> Attached sheet 3 (5/21)

STEP 1. Charging cable check

Check if the fault indication of the electric leakage breaker incorporated in the EVcharging cable is flashing.

<Old> Go to Step 2'. <New>

Q: Is the check result normal?

YES : ~~Go to Step 2.~~

NO : Replace the charging cable.

STEP 2. Voltage measurement at C-106 EV-ECU connector

(1) Disconnect the connector and measure at the wiring harness side.

(2) Measure the voltage between the C-106 EV-ECU connector terminal No. 1 and the earth.

OK: Battery voltage

Q: Is the check result normal?

YES : Go to Step 4.

NO : Go to Step 3.

STEP 3. Check the wiring harness between C-106 EV-ECU connector terminal No. 1 and the fusible link No. 25.

<Old>

Check the power supply line for open circuit and short circuit.

NOTE: Before the wiring harness check, check B-301 and B-310 junction block connector, and repair if necessary.

Q: Is the check result normal?

YES : Intermittent malfunction (Refer to GROUP 00 – How to Use Troubleshooting/ Inspection Service Points – How to Cope with Intermittent Malfunction .)

NO : Repair the wiring harness. Then go to Step 4.

Attached sheet 3 (5/21)

<New>

STEP 4. Check whether the diagnosis code is set.
Check if the diagnosis code is set to the EV-ECU.

Q: Is the diagnosis code set?
YES : Carry out the troubleshooting for the relevant diagnosis code. (Refer to P.54D-47.)
NO : Go to Step 5.

<Deleted>

STEP 5. Charging lamp check
Check that the charging lamp flashes when the charging cable is connected, and it is illuminated permanently when the charging starts.

Q: Is the check result normal?
YES : Intermittent malfunction (Refer to GROUP 00 – How to Use Troubleshooting/ Inspection Service Points – How to Cope with Intermittent Malfunction .)
NO : Check the charging cable. (Refer to P.54D-617.) Then go to Step 6.

STEP 6. Connector check: G-03 regular charging connection, G-04 earth connector, G-11 on board charger/DC-DC converter connector

Q: Is the check result normal?
YES : Go to Step 7.
NO : Repair the damaged connector. Or replace the EV charger cable (regular charging). (Refer to P.54D-623.)

STEP 7. Check the wiring harness between G-03 regular charging connection terminal No. 1, 2, 4, 5 to G-11 on board charger/DC-DC converter connector terminal No. 1, 2, G-04 earth connector terminal No. 3 and the body earth.
Check the power supply and earth lines for open circuit.

Q: Is the check result normal?
YES : Go to Step 8.
NO : Repair the wiring harness. Or replace the EV charger cable (regular charging). (Refer to P.54D-623.)

<Deleted>

STEP 8. Connector check: ~~C-106 EV-ECU connector,~~ E-03 on board charger/DC-DC converter connector

Q: Is the check result normal?
YES : Go to Step 9.
NO : Repair the damaged connector.

STEP 9. Check the wiring harness between C-106 EV-ECU connector terminal No. 11 and E-03 on board charger/DC-DC converter connector terminal No. 12.
Check the signal lines for open circuit.

Q: Is the check result normal?
YES : Go to Step 10.
NO : Repair the wiring harness.

STEP 10. Check the wiring harness between E-03 on board charger/DC-DC converter connector terminal No. 7 and relay box fuse (No. 11).
Check the signal lines for open circuit.

Q: Is the check result normal?
YES : Go to Step 11.
NO : Repair the wiring harness.

STEP 11. Check the trouble symptom.

Q: Is the check result normal?
YES : The diagnosis is complete.
NO : Check the domestic power supply facility. Or replace the on board charger & DC/DC converter. (Refer to P.54D-621.)

Inspection Procedure 12: Charging time is longer than usual, or charging does not stop.

COMMENTS ON TROUBLE SYMPTOM
- The cause is assumed to be low environment temperature at charging.

PROBABLE CAUSES
- Use of an extension cable
- Malfunction of the domestic power supply facility
- Simultaneous use with other electric products in the home

DIAGNOSIS PROCEDURE

STEP 1. ?Check whether the diagnosis code is set.
Check if the diagnosis code is set to the on board charger.

Q: Is the diagnosis code set?

Connectors: B-301, B-310 <LHD>

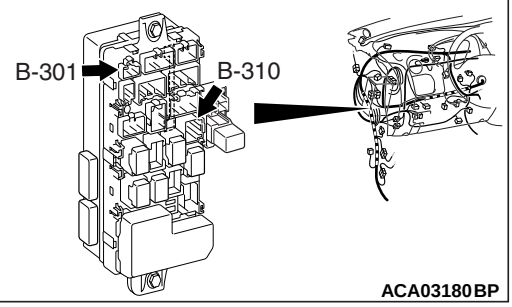

Connectors: B-301, B-310 <RHD>

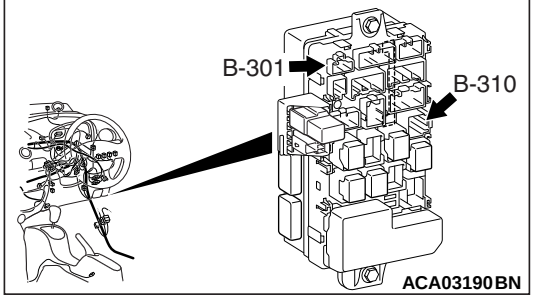

Connectors: C-106
Rear floor lower part

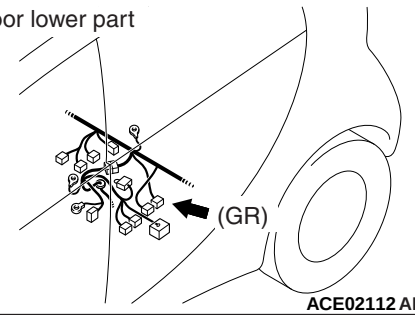

Connectors: G-03, G-11

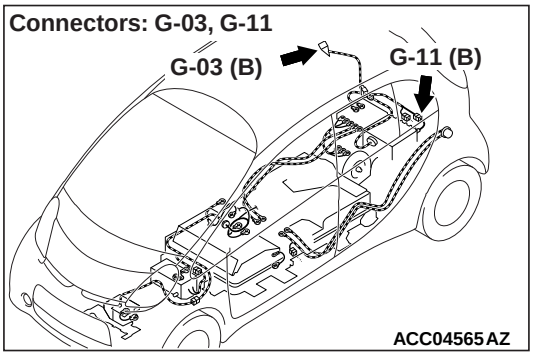

Connector: E-03

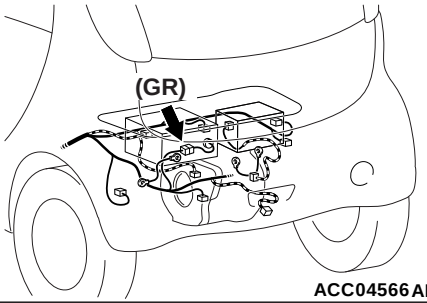

COMMENTS ON TROUBLE SYMPTOM

- The cause is assumed to be low environment temperature at charging.

PROBABLE CAUSES

- Damaged wiring harness or connector(s)
- Malfunction of the fuse and fusible link
- Malfunction of the charging cable
- Malfunction of the on board charger/DC-DC converter
- Malfunction of the domestic power supply facility

DIAGNOSIS PROCEDURE

⚠ ***DANGER***

- ***When high voltage system components are serviced, be sure to remove service plug to shut down high voltage (Refer to GROUP 00 – Precautions before service, Precautions on how to use the high-voltage vehicle).***
- ***When removing service plug, wear the specified protective equipment.***

<Added> Attached sheet 3 (5/21)

STEP 1. Charging cable check

Check if the fault indication of the electric leakage breaker incorporated in the EV charging cable is flashing. <Old> Go to Step 2'. <New>

Q: Is the check result normal?

YES : ~~Go to Step 2.~~

NO : Replace the charging cable.

STEP 2. Voltage measurement at C-106 EV-ECU connector

(1) Disconnect the connector and measure at the wiring harness side.

(2) Measure the voltage between the C-106 EV-ECU connector terminal No. 1 and the earth.

OK: Battery voltage

Q: Is the check result normal?

YES : Go to Step 4.

NO : Go to Step 3.

STEP 3. Check the wiring harness between C-106 EV-ECU connector terminal No. 1 and the fusible link No. 25.

Check the power supply line for open circuit and short circuit. <Old>

~~*NOTE: Before the wiring harness check, check B-301 and B-310 junction block connector, and repair if necessary.*~~

<New> Attached sheet 3 (5/21)

<Old>

Q: Is the check result normal?
YES : Intermittent malfunction (Refer to GROUP 00 – How to Use Troubleshooting/ Inspection Service Points, How to Cope with Intermittent Malfunction .)
NO : Repair the wiring harness. Then go to Step 4.

STEP 4. Check whether the diagnosis code is set.
Check if the diagnosis code is set in the EV-ECU.

Q: Is the diagnosis code set?
YES : Carry out the troubleshooting for the relevant diagnosis code. (Refer to .)
NO : Go to Step 5.

<Deleted>

STEP 5. Charging lamp check
Check that the charging lamp flashes when the charging cable is connected, and it is illuminated permanently when the charging starts.

Q: Is the check result normal?
YES : Intermittent malfunction (Refer to GROUP 00 – How to Use Troubleshooting/ Inspection Service Points, How to Cope with Intermittent Malfunction).
NO : Check the charging cable (Refer to P.54Dd-81). Then go to Step 6.

STEP 6. Connector check: G-03 regular charging connection, G-11 on board charger/DC-DC converter connector

Q: Is the check result normal?
YES : Go to Step 7.
NO : Repair the damaged connector. Or replace the EV charger cable (regular charging) (Refer to P.54Dd-86).

Attached sheet 3 (5/21)

<New>

STEP 7. Check the wiring harness between G-03 regular charging connection terminal No. 1, 2, 5 to G-11 on board charger/DC-DC converter connector terminal No. 1, 2 and the body earth.
Check the power supply and earth lines for open circuit.

Q: Is the check result normal?
YES : Go to Step 8.
NO : Repair the wiring harness. Or replace the EV charger cable (regular charging) (Refer to P.54Dd-86).

<Deleted>

STEP 8. Connector check: C-106 EV-ECU connector, E-03 on board charger/DC-DC converter connector

Q: Is the check result normal?
YES : Go to Step 9.
NO : Repair the damaged connector.

STEP 9. Check the wiring harness between C-106 EV-ECU connector terminal No. 11 and E-03 on board charger/DC-DC converter connector terminal No. 12.
Check the signal lines for open circuit.

Q: Is the check result normal?
YES : Go to Step 10.
NO : Repair the wiring harness.

STEP 10. Check the wiring harness between E-03 on board charger/DC-DC converter connector terminal No. 7 and relay box fuse (No. 11).
Check the signal lines for open circuit.

Q: Is the check result normal?
YES : Go to Step 11.
NO : Repair the wiring harness.

STEP 11. Check the trouble symptom.

Q: Is the check result normal?
YES : The diagnosis is complete.
NO : Check the domestic power supply facility. Or replace the on board charger & DC/DC converter (Refer to P.54Dd-84).

Inspection Procedure 15: Charging time is longer than usual, or charging does not stop.

COMMENTS ON TROUBLE SYMPTOM
- The cause is assumed to be low environment temperature at charging.

PROBABLE CAUSES
- Use of an extension cable
- Malfunction of the domestic power supply facility

STEP 2'. Connector check: C-106 EV-ECU connector
Q:Is the check result normal?
YES : Go to Step 2.
NO : Repair the damaged connector.

<Added>



Attached sheet 3 (1/21),(3/21)

<New>

NOTE: ·Before the wiring harness check, check fuse No. 13, and repair if necessary.
·Before the wiring harness check, check B-301 and B-310 junction block connector, and repair if necessary.
Q:Is the check result normal?
YES : Check to the combination meter troubleshooting (Refer to GROUP 54A - Combination Meter - Inspection Procedure "When the reset witch is operated with the electric motor switch at OFF position, the odo/trip meter is not displayed").
NO : Repair the fuse or wiring harness.



<Old> Attached sheet 3 (1/21),(3/21),(4/21)

QUICK CHARGING SYSTEM

INSPECTION CHART FOR TROUBLE SYMPTOMS

M1549222500050

Trouble symptom	Comments on trouble symptom
No charging starts until the charging rate becomes 80%.	The protection control is activated by charging at a low temperature.

TROUBLE SYMPTOM CHART

Inspection procedure	Check item	Reference page
1	Non-removal quick charging gun	P.54D-624

SYMPTOM PROCEDURES

Inspection Procedure 1: Non-removal quick charging gun

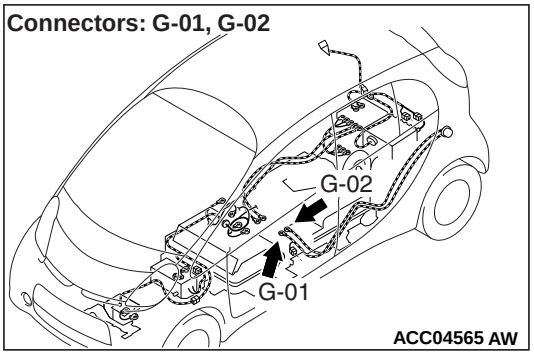

COMMENTS ON TROUBLE SYMPTOM

- The cause is assumed to be malfunction of quick charger (Ask the quick charger supplier to check the defective quick charger).
- The cause is assumed to be stuck ON of quick charging contactor (+), (–) in the traction battery.

PROBABLE CAUSES

- Malfunction of quick charger
- Damaged wiring harness or connector(s)
- Malfunction of the quick charging contactor (+), (–) in the traction battery
- Malfunction of the quick charging relay
- Malfunction of the EV-ECU

DIAGNOSIS PROCEDURE

STEP 1. Check whether the diagnosis code is set.
Check if the diagnosis code is set in the EV-ECU.

Q: Is the diagnosis code set?
YES : Carry out troubleshooting for the EV-ECU (Refer to GROUP 54Da – Troubleshooting).
NO : Go to Step 2.

<Added>

2	Quick charging is impossible, or the external power supply equipment cannot be used	

INSPECTION CHART FOR TROUBLE SYMPTOMS

M1549222500050

Trouble symptom	Comments on trouble symptom
No charging starts until the charging rate becomes 80%.	The protection control is activated by charging at a low temperature.

TROUBLE SYMPTOM CHART

Inspection procedure	Check item	Reference page
1	Non-removal quick charging gun	P.54De-11

SYMPTOM PROCEDURES

Inspection Procedure 1: Non-removal quick charging gun

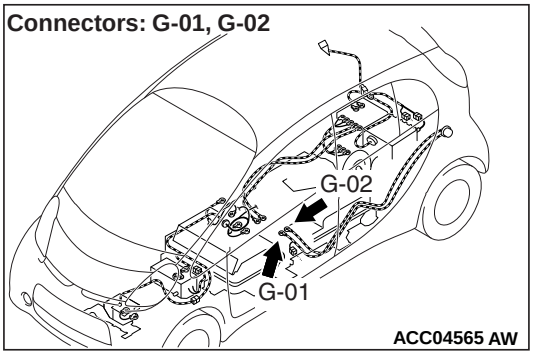

COMMENTS ON TROUBLE SYMPTOM

- The cause is assumed to be malfunction of quick charger (Ask the quick charger supplier to check the defective quick charger).
- The cause is assumed to be stuck ON of quick charging contactor (+), (–) in the traction battery.

PROBABLE CAUSES

- Malfunction of quick charger
- Damaged wiring harness or connector(s)
- Malfunction of the quick charging contactor (+), (–) in the traction battery
- Malfunction of the quick charging relay
- Malfunction of the EV-ECU

DIAGNOSIS PROCEDURE

STEP 1. Check whether the diagnosis code is set.

Check if the diagnosis code is set in the EV-ECU.

Q: Is the diagnosis code set?

YES : Carry out troubleshooting for the EV-ECU (Refer to GROUP 54Da – Troubleshooting).

NO : Go to Step 2.

<Added>

2	Quick charging is impossible, or the external power supply equipment cannot be used	

Inspection procedure 2: Quick charging is impossible, or the external power supply equipment cannot be used

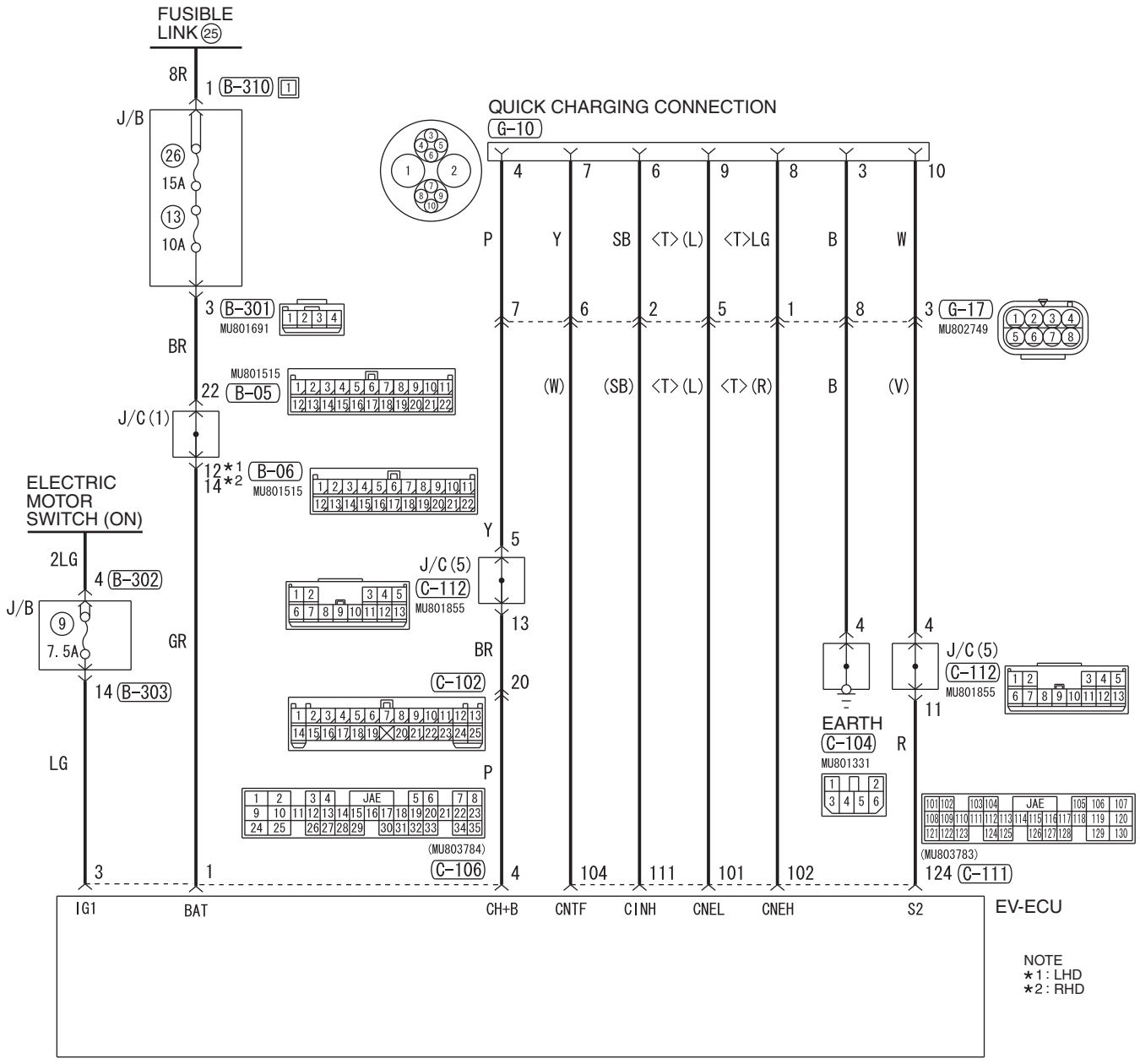

Wire colour code
B : Black LG : Light green G : Green L : Blue W : White Y : Yellow SB : Sky blue
BR : Brown O : Orange GR : Grey R : Red P : Pink V : Violet PU : Purple SI : Silver

ACF03347

Connectors: B-301, B-310 <LHD>

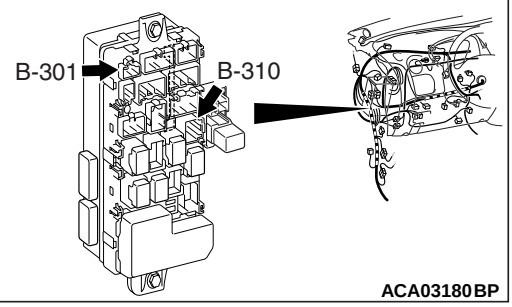

Connectors: B-301, B-310 <RHD>

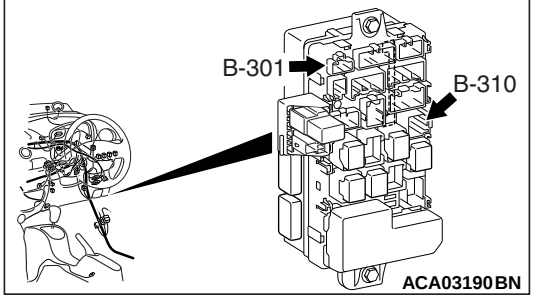

Connectors: C-105, C-111
Rear floor lower part

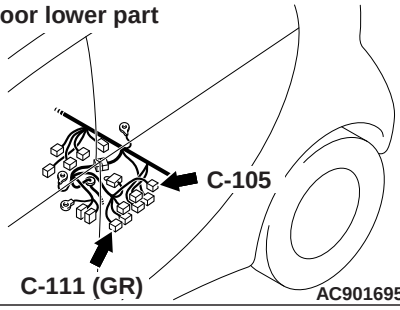

Connector: G-10

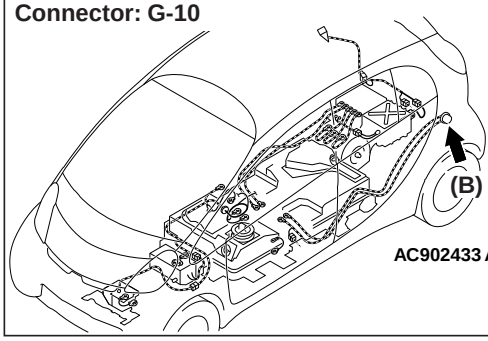

⚠ CAUTION
The quick charging is not permitted when a cell temperature is -25°C or less.

COMMENTS ON TROUBLE SYMPTOM
- The cause is assumed to be malfunction of backup power supply in the EV-ECU.
- The EV-ECU is suspected in the following cases; the charging indicator does not flash with a charging connector (gun) connected and the external power supply equipment cannot be used.

PROBABLE CAUSES
- Malfunction of the quick charger/the external power supply equipment
- Damaged harness or connector
- Malfunction of EV-ECU
- Malfunction of the fuse and fusible link
- Malfunction of the domestic power supply facility

DIAGNOSIS PROCEDURE

STEP 1. Check quick charger connector
(1) Check whether the quick charging connector is connected securely.
(2) Check that the water drain hole on the quick charging connector is not interrupted.

Q: Is the check result normal?
YES : Go to Step 2.
NO : Repair the connector. Then go to Step 3.

STEP 2. Retest the system

Q: Is the check result normal?
YES : Go to Step 3.
NO : The trouble can be an intermittent malfunction (Refer to GROUP 00, How to Cope with Intermittent Malfunction).

STEP 3. Connector check: C-106 EV-ECU connector

Q: Is the check result normal?
YES : Go to Step 4.
NO : Repair the damaged connector.

STEP 4. Measure the voltage at C-106 EV-ECU connector
(1) Disconnect the connector and measure at the wiring harness side.
(2) Measure the voltage between C-106 EV-ECU connector terminal No. 1 and the earth.

OK: Battery voltage

Q: Is the check result normal?
YES : Go to Step 6.
NO : Go to Step 5.

STEP 5. Check the wiring harness between C-106 EV-ECU connector terminal No. 1 and the fusible link No. 25.

Check the power supply line for open circuit and short circuit.

NOTE:

- *Before the wiring harness check, check fuse No. 13, and repair if necessary.*
- *Before the wiring harness check, check B-301 and B-310 junction block connector, and repair if necessary.*

Q: Is the check result normal?

YES : Check to the combination meter troubeshooting (Refer to GROUP 54A – Combination meter – Inspection Procedure "When the reset witch is operated with the electric motor switch at OFF position, the odo/trip meter is not displayed").

NO : Repair the fuse or wiring harness.

STEP 6. Connector check: G-10 quick charger connector, C-111 EV-ECU connector

Q: Is the check result normal?

YES : Go to Step 7.

NO : Repair the damaged connector.

STEP 7. Check the wiring harness

Check the wiring harness below for open circuit and short circuit.

(1) Between the C-111 EV-ECU connector terminal No. 104 and G-10 quick charger connector terminal No. 7

(2) Between the C-106 EV-ECU connector terminal No. 3 and B-303 junction block connector terminal No. 14

(3) Between the C-106 EV-ECU connector terminal No. 4 and G-10 quick charger connector terminal No. 4

NOTE: Prior to the wiring harness inspection, check C102, G-17 intermediate connectors, and repair if necessary.

Q: Is the check result normal?

YES : Check the quick charger or the external power supply equipment. Then go to Step 8 .

NO : Repair the connector or wiring harness.

STEP 8. Retest the system

Q: Is the check result normal?

YES : The procedure is complete.

NO : Replace the EV-ECU (Refer to).

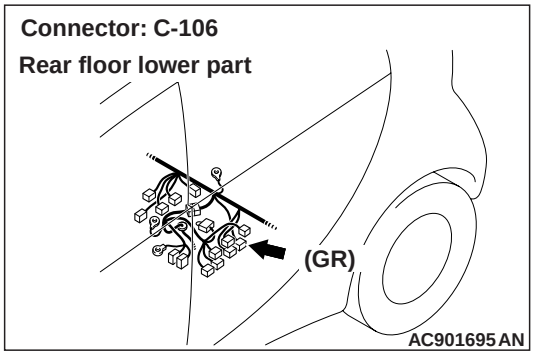

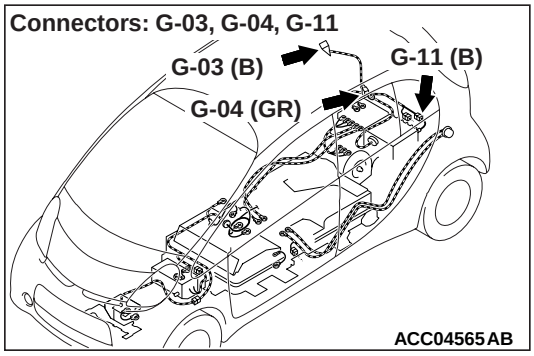

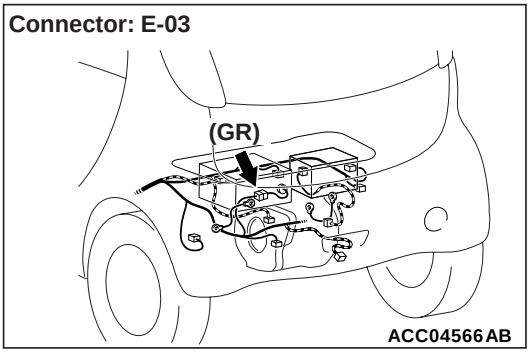

COMMENTS ON TROUBLE SYMPTOM

- The cause is assumed to be low environment temperature at charging.

PROBABLE CAUSES

- Damaged wiring harness or connector(s)
- Malfunction of the fuse and fusible link
- Malfunction of the charging cable
- Malfunction of the on board charger/DC-DC converter
- Malfunction of the domestic power supply facility

DIAGNOSIS

STEP 1. Charging cable check

Check if the fault indication of the electric leakage breaker incorporated in the charging cable is flashing.

Q: Is the check result normal?

YES : ~~Go to Step 2.~~ <Old>

<New> Go to Step 2'.

NO : Replace the charging cable.

STEP 2. Voltage measurement at C-106 EV-ECU connector

(1) Disconnect the connector and measure at the wiring harness side.

(2) Measure the voltage between the C-106 EV-ECU connector terminal No. 1 and the ground.

OK: Battery voltage

Q: Is the check result normal?

YES : Go to Step 4.

NO : Go to Step 3.

<Added>

STEP 2'. Connector check: C-106 EV-ECU connector
Q:Is the check result normal?
YES : Go to Step 2.
NO : Repair the damaged connector.

STEP 3. Check the wiring harness between C-106 EV-ECU connector terminal No. 1 and the fusible link No. 25.
Check the power supply line for open circuit and short circuit.

<Old>

~~*NOTE: Before the wiring harness check, check B-301 and B-310 junction block connector, and repair if necessary.*~~

~~**Q: Is the check result normal?**~~

~~**YES :** Intermittent malfunction (Refer to GROUP 00 – How to Use Troubleshooting/Inspection Service Points – How to Cope with Intermittent Malfunction .).~~

~~**NO :** Repair the wiring harness. Then go to Step 4.~~

<New>

NOTE: ·Before the wiring harness check, check fuse No. 13, and repair if necessary.
·Before the wiring harness check, check B-301 and B-310 junction block connector, and repair if necessary.
Q:Is the check result normal?
YES : Check to the combination Meter troubleshooting (Refer to GROUP 54A - Combination meter - Inspection Procedure "When the reset witch is operated with the electric motor switch at OFF position, the odo/trip meter is not displayed").
NO : Repair the fuse or wiring harness.

STEP 4. Check whether the DTC is stored.
Check if the DTC is stored in the EV-ECU.

Q: Is the DTC stored?

YES : Carry out the troubleshooting for the relevant DTC (Refer to P.54D-50.).

NO : Go to Step 5.

STEP 5. Charging light check
Check that the charging light flashes when the charging cable is connected, and it is illuminated permanently when the charging starts.

Q: Is the check result normal?

YES : Intermittent malfunction (Refer to GROUP 00 – How to Use Troubleshooting/Inspection Service Points – How to Cope with Intermittent Malfunction .).

NO : Check the charging cable (Refer to P.54D-835.). Then go to Step 6.

STEP 6. Connector check: G-03 regular charging connection, G-04 ground connector, G-11 on board charger/DC-DC converter connector

Q: Is the check result normal?

YES : Go to Step 7.

NO : Repair the damaged connector. Or replace the EV charger cable (regular charging) (Refer to P.54D-840.).

STEP 7. Check the wiring harness between G-03 regular charging connection terminal No. 1, 2, 4, 5 to G-11 on board charger/DC-DC converter connector terminal No. 1, 2, G-04 ground connector terminal No. 3 and the body ground.
Check the power supply and ground lines for open circuit.

Q: Is the check result normal?

YES : Go to Step 8.

NO : Repair the wiring harness. Or replace the EV charger cable (regular charging) (Refer to P.54D-840.).

<Deleted>

STEP 8. Connector check: ~~C-106 EV-ECU connector,~~ E-03 on board charger/DC-DC converter connector

Q: Is the check result normal?

YES : Go to Step 9.
NO : Repair the damaged connector.

STEP 9. Check the wiring harness between C-106 EV-ECU connector terminal No. 11 and E-03 on board charger/DC-DC converter connector terminal No. 12.
Check the signal lines for open circuit.

Q: Is the check result normal?

YES : Go to Step 10.
NO : Repair the wiring harness.

STEP 10. Check the wiring harness between E-03 on board charger/DC-DC converter connector terminal No. 7 and relay box fuse (No. 11).
Check the signal lines for open circuit.

Q: Is the check result normal?

YES : Go to Step 11.
NO : Repair the wiring harness.

STEP 11. Check the trouble symptom.

Q: Is the check result normal?

YES : The diagnosis is complete.
NO : Check the domestic power supply facility. Or replace the on board charger & DC/DC converter (Refer to P.54D-838.).

Attached sheet 3 (14/21)

DIAGNOSIS

⚠ *DANGER*

- ***When high voltage system components are serviced, be sure to remove service plug to shut down high voltage (Refer to GROUP 00 – Precautions before service, Precautions on how to use the high-voltage vehicle).***
- ***When removing service plug, wear the specified protective equipment.***

STEP 1. Charging cable check

Check if the fault indication of the electric leakage breaker incorporated in the EV charging cable is flashing.

Q: Is the check result normal?

YES : ~~Go to Step 2.~~ <Old>

<New> Go to Step 2'.

NO : Replace the charging cable.

STEP 2. Voltage measurement at C-106 EV-ECU connector

(1) Disconnect the connector and measure at the wiring harness side.

(2) Measure the voltage between the C-106 EV-ECU connector terminal No. 1 and the ground.

OK: Battery voltage

Q: Is the check result normal?

YES : Go to Step 4.

NO : Go to Step 3.

<Added>

STEP 2'. Connector check: C-106 EV-ECU connector
Q:Is the check result normal?
YES : Go to Step 2.
NO : Repair the damaged connector.

STEP 3. Check the wiring harness between C-106 EV-ECU connector terminal No. 1 and the fusible link No. 25.

Check the power supply line for open circuit and short circuit.

<Old>

~~*NOTE: Before the wiring harness check, check B-301 and B-310 junction block connector, and repair if necessary.*~~

~~**Q: Is the check result normal?**~~

~~**YES :** Intermittent malfunction (Refer to GROUP 00 – How to Use Troubleshooting/Inspection Service Points, How to Cope with Intermittent Malfunction .)~~

~~**NO :** Repair the wiring harness. Then go to Step 4.~~

STEP 4. Check whether the DTC is set.

Check if the diagnostic trouble code is set in the EV-ECU.

Q: Is the DTC set?

YES : Carry out the troubleshooting for the relevant DTC. (Refer to GROUP 54Da – Troubleshooting .)

NO : Go to Step 5.

<New>

NOTE: ·Before the wiring harness check, check fuse No. 13, and repair if necessary.
·Before the wiring harness check, check B-301 and B-310 junction block connector, and repair if necessary.
Q:Is the check result normal?
YES : Check to the combination meter troubleshooting (Refer to GROUP 54A - Combination Meter - Inspection Procedure "When the reset witch is operated with the electric motor switch at OFF position, the odo/trip meter is not displayed").
NO : Repair the fuse or wiring harness.

STEP 5. Charging lamp check

Check that the charging lamp flashes when the charging cable is connected, and it is illuminated permanently when the charging starts.

Q: Is the check result normal?

YES : Intermittent malfunction (Refer to GROUP 00 – How to Use Troubleshooting/Inspection Service Points, How to Cope with Intermittent Malfunction).

NO : Check the charging cable (Refer to P.54Dd-105). Then go to Step 6.

STEP 6. Connector check: G-03 regular charging connection, G-11 on board charger/DC-DC converter connector

Q: Is the check result normal?

YES : Go to Step 7.

NO : Repair the damaged connector. Or replace the EV charger cable (regular charging) (Refer to P.54Dd-110).

STEP 7. Check the wiring harness between G-03 regular charging connection terminal No. 1, 2, 5 to G-11 on board charger/DC-DC converter connector terminal No. 1, 2 and the body ground.

Check the power supply and ground lines for open circuit.

Q: Is the check result normal?

YES : Go to Step 8.

NO : Repair the wiring harness. Or replace the EV charger cable (regular charging) (Refer to P.54Dd-110).

STEP 8. Connector check: ~~C-106 EV-ECU connector,~~ E-03 on board charger/DC-DC converter connector <Deleted>

Q: Is the check result normal?

YES : Go to Step 9.

NO : Repair the damaged connector.

STEP 9. Check the wiring harness between C-106 EV-ECU connector terminal No. 11 and E-03 on board charger/DC-DC converter connector terminal No. 12.

Check the signal lines for open circuit.

Q: Is the check result normal?

YES : Go to Step 10.

NO : Repair the wiring harness.

QUICK CHARGING SYSTEM

INSPECTION CHART FOR TROUBLE SYMPTOMS

M1549222500083

Trouble symptom	Comments on trouble symptom
No charging starts until the charging rate becomes 80%.	The protection control is activated by charging at a low temperature.

TROUBLE SYMPTOM CHART

Inspection procedure	Check item	Reference page
1	Non-removal quick charging gun	P.54D-849

SYMPTOM PROCEDURES

Inspection Procedure 1: Non-removal quick charging gun

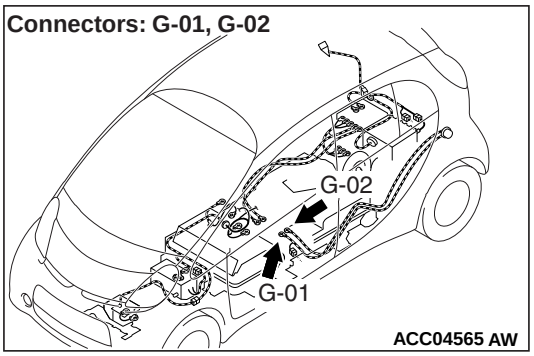

COMMENTS ON TROUBLE SYMPTOM

- The cause is assumed to be malfunction of quick charger (Ask the quick charger supplier to check the defective quick charger).
- The cause is assumed to be stuck ON of quick charging contactor (+), (–) in the Main Drive Lithium-ion Battery.

PROBABLE CAUSES

- Malfunction of quick charger
- Damaged wiring harness or connector(s)
- Malfunction of the quick charging contactor (+), (–) in the Main Drive Lithium-ion Battery
- Malfunction of the quick charging relay
- Malfunction of the EV-ECU

DIAGNOSIS

STEP 1. Check whether the DTC is set.
Check if the DTC is set to the EV-ECU.

Q: Is the DTC set?

YES : Carry out troubleshooting for the EV-ECU (Refer to P.54D-49).
NO : Go to Step 2.

<Added>

2	Quick charging is impossible, or the external power supply equipment cannot be used	

Check column	Steps	Contents	Precautions
	3	Slide the front seat (LH) to the end, and turn up the carpet under the front seat (LH).	–
	4	Remove the service lid mounting nut, and then remove the service lid.	–
	5	Lift the service plug lever.	⚠ ***DANGER*** • ***Wear the electric insulation gloves when removing the service plug.*** • ***Do not lift the lever of service plug by halve. It is dangerous because the current is supplied during the lifting operation. Be sure to remove the service plug all at once.*** • ***After removing the service plug, insulate the plug installed part of the main drive lithium-ion battery securely.*** ⚠ ***WARNING*** ***The voltage of the smooth condenser in the inverter must be decreased thoroughly. Therefore, do not remove the service plug for 5 minutes after the negative terminal of the 12V starter battery is disconnected.***
	6	Remove the service plug.	
	7	When removing and installing the high voltage components, be sure to conduct inspection in advance.	⚠ ***DANGER*** ***During inspection, wear the electric insulation gloves.***

INSPECTION CHART FOR TROUBLE SYMPTOMS

M1549222500083

Trouble symptom	Comments on trouble symptom
No charging starts until the charging rate becomes 80%.	The protection control is activated by charging at a low temperature.

TROUBLE SYMPTOM CHART

Inspection procedure	Check item	Reference page
1	Non-removal quick charging gun	P.54De-13
<Added>		
2	Quick charging is impossible, or the external power supply equipment cannot be used	

INSPECTION PROCEDURE 2: Quick charging is impossible, or the external power supply equipment cannot be used

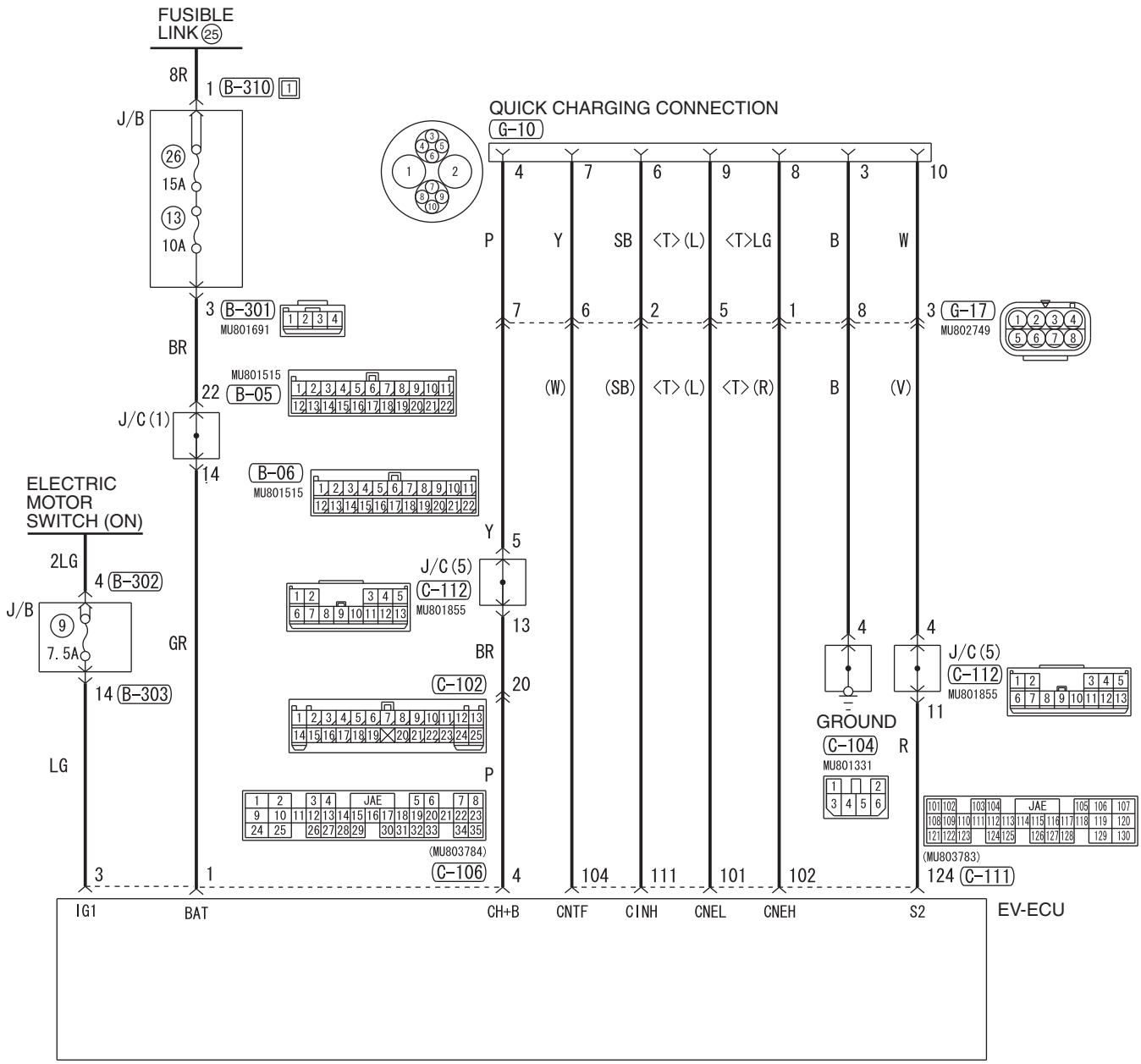

Wire colour code
B : Black LG : Light green G : Green L : Blue W : White Y : Yellow SB : Sky blue
BR : Brown O : Orange GR : Grey R : Red P : Pink V : Violet PU : Purple SI : Silver

ACF03347AB

<Added>

Connectors: B-301, B-310

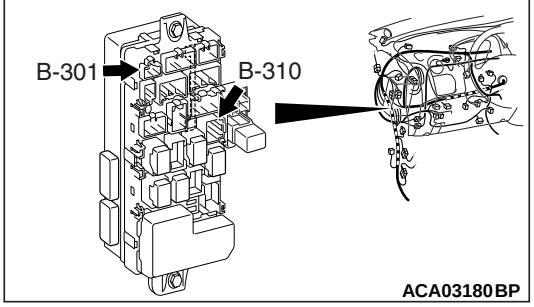

Connector: G-10

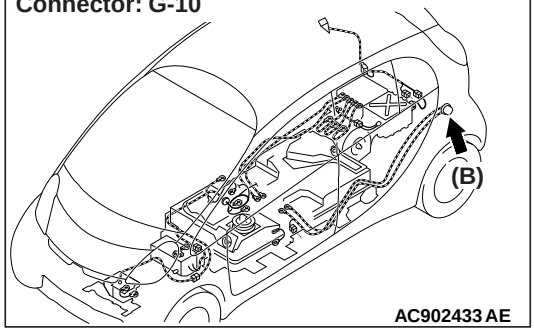

Connectors: C-105, C-111

Rear floor lower part

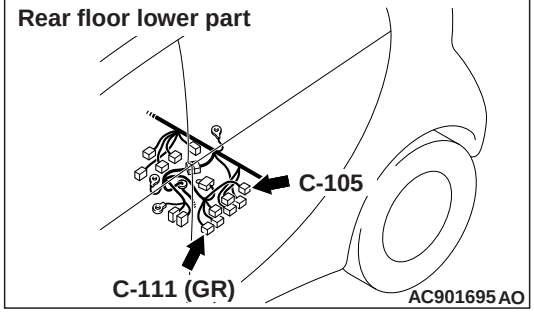

⚠ CAUTION

The quick charging is not permitted when a cell temperature is -77 °F or less.

COMMENTS ON TROUBLE SYMPTOM

- The cause is assumed to be malfunction of backup power supply in the EV-ECU.
- The EV-ECU is suspected in the following cases; the charging indicator does not flash with a charging connector (gun) connected and the external power supply equipment cannot be used.

PROBABLE CAUSES

- Malfunction of the quick charger/the external power supply equipment
- Damaged harness or connector
- Malfunction of EV-ECU
- Malfunction of the fuse and fusible link
- Malfunction of the domestic power supply facility

DIAGNOSIS

STEP 1. Check quick charger connector

(1) Check whether the quick charging connector is connected securely.

(2) Check that the water drain hole on the quick charging connector is not interrupted.

Q: Is the check result normal?

YES : Go to Step 2.

NO : Repair the connector. Then go to Step 3.

<Added>

STEP 2. Retest the system

Q: Is the check result normal?

YES : Go to Step 3.
NO : The trouble can be an intermittent malfunction (Refer to GROUP 00, How to Cope with Intermittent Malfunction).

STEP 3. Connector check: C-106 EV-ECU connector

Q: Is the check result normal?

YES : Go to Step 4.
NO : Repair the damaged connector.

STEP 4. Measure the voltage at C-106 EV-ECU connector

(1) Disconnect the connector and measure at the wiring harness side.
(2) Measure the voltage between C-106 EV-ECU connector terminal No. 1 and the ground.

OK: Battery voltage

Q: Is the check result normal?

YES : Go to Step 6.
NO : Go to Step 5.

STEP 5. Check the wiring harness between C-106 EV-ECU connector terminal No. 1 and the fusible link No. 25.

Check the power supply line for open circuit and short circuit.

NOTE:

- *Before the wiring harness check, check fuse No. 13, and repair if necessary.*
- *Before the wiring harness check, check B-301 and B-310 junction block connector, and repair if necessary.*

Q: Is the check result normal?

YES : Check to the combination meter troubeshooting (Refer to GROUP 54A – Combination meter – Inspection Procedure "When the reset witch is operated with the electric motor switch at OFF position, the odo/trip meter is not displayed").
NO : Repair the fuse or wiring harness.

STEP 6. Connector check: G-10 quick charger connector, C-111 EV-ECU connector

Q: Is the check result normal?

YES : Go to Step 7.
NO : Repair the damaged connector.

<Added>

STEP 7. Check the wiring harness

Check the wiring harness below for open circuit and short circuit.

(1) Between the C-111 EV-ECU connector terminal No. 104 and G-10 quick charger connector terminal No. 7
(2) Between the C-106 EV-ECU connector terminal No. 3 and B-303 junction block connector terminal No. 14
(3) Between the C-106 EV-ECU connector terminal No. 4 and G-10 quick charger connector terminal No. 4

NOTE: Prior to the wiring harness inspection, check C102, G-17 intermediate connectors, and repair if necessary.

Q: Is the check result normal?

YES : Check the quick charger or the external power supply equipment. Then go to Step 8 .
NO : Repair the connector or wiring harness.

STEP 8. Retest the system

Q: Is the check result normal?

YES : The procedure is complete.
NO : Replace the EV-ECU (Refer to).